S-817 Series

SUPER-SMALL PACKAGE CMOS VOLTAGE REGULATOR

www.ablic.com

© ABLIC Inc., 1999-2015

Rev.6.2_02

The S-817 Series is a 3-terminal positive voltage regulator, developed using CMOS technology. Small ceramic capacitors can be used as the output capacitor, and the S-817 Series provides stable operation with low loads down to 1 μA.
Compared with the conventional voltage regulator, it is low current consumption, and with a lineup of the super small package (SNT-4A:1.2 mm × 1.6 mm). It is optimal as a power supply of small portable device.

■ Features

- Output voltage: 1.1 V to 6.0 V, selectable in 0.1 V step
- Output voltage accuracy: ±2.0%
- Dropout voltage: 160 mV typ. (5.0 V output product, I_{OUT} = 10 mA)
- Current consumption: During operation: 1.2 μA typ., 2.5 μA max.
- Output current: Possible to output 50 mA (3.0 V output product, V_{IN}=5 V)*1
  Possible to output 75 mA (5.0 V output product, V_{IN}=7 V)*1
- Output capacitor: A ceramic capacitor of 0.1 μF or more can be used.
- Built-in short circuit protection: Only S-817A Series
- Line regulation: Stable operation at low load of 1 μA
- Operation temperature range: Ta = −40°C to +85°C
- Lead-free, Sn 100%, halogen-free*2

***1.** Attention should be paid to the power dissipation of the package when the load is large.
***2.** Refer to "■ **Product Name Structure**" for details.

■ Applications

- Constant-voltage power supply for battery-powered device
- Constant-voltage power supply for personal communication device
- Constant-voltage power supply for home electric appliance

■ Packages

- SNT-4A
- SC-82AB
- SOT-23-5
- SOT-89-3
- TO-92

■ Block Diagrams

1. S-817A Series

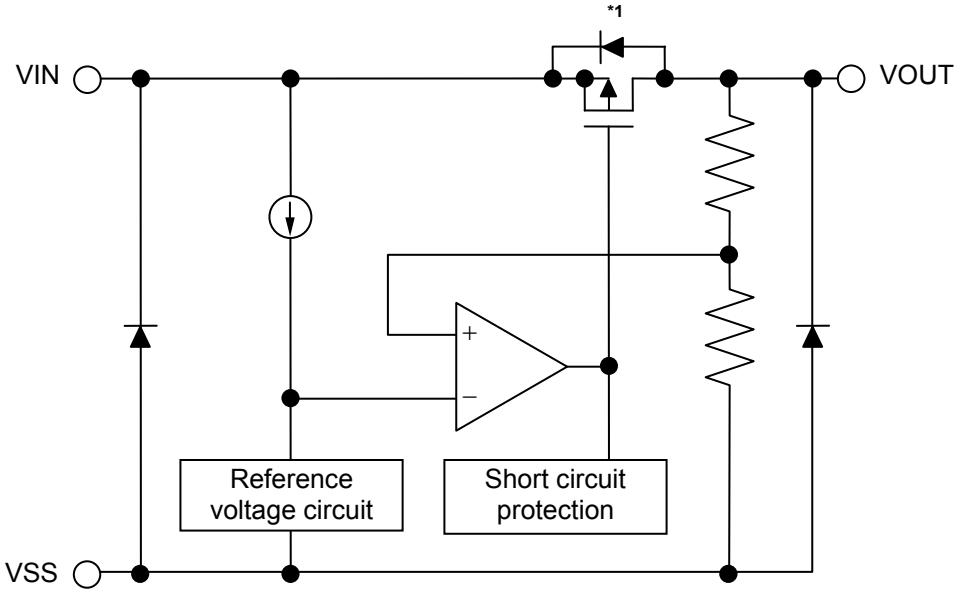

***1.** Parasitic diode

Figure 1

2. S-817B Series

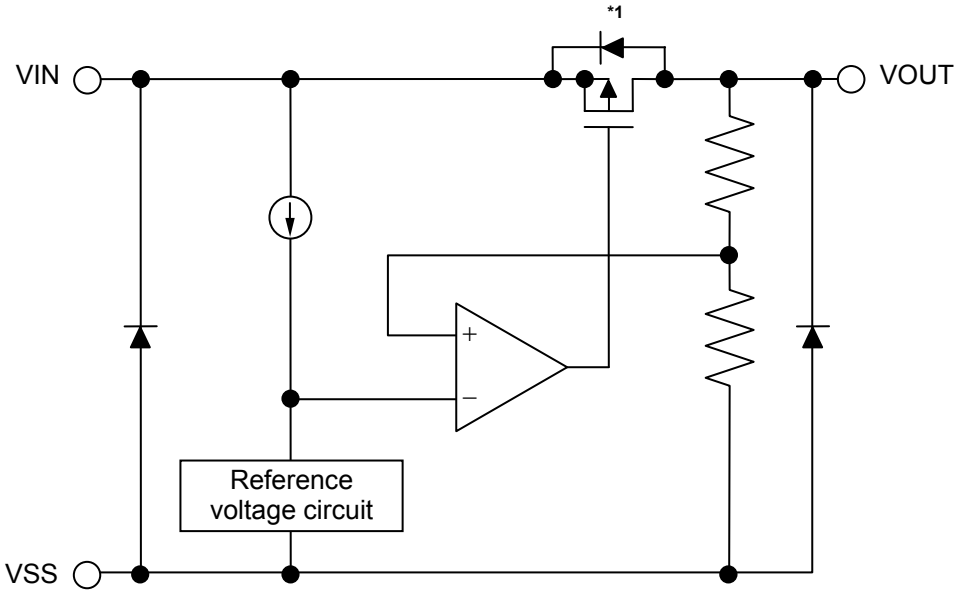

***1.** Parasitic diode

Figure 2

■ Product Name Structure

Users can select the product type, output voltage, and package type for the S-817 Series. Refer to the "**1. Product name**" regarding the contents of the product name, "**2. Packages**" regarding the package drawings, "**3. Product name list**" regarding details of the product name.

1. Product name

1. 1 S-817A Series

1. 1. 1 SNT-4A package

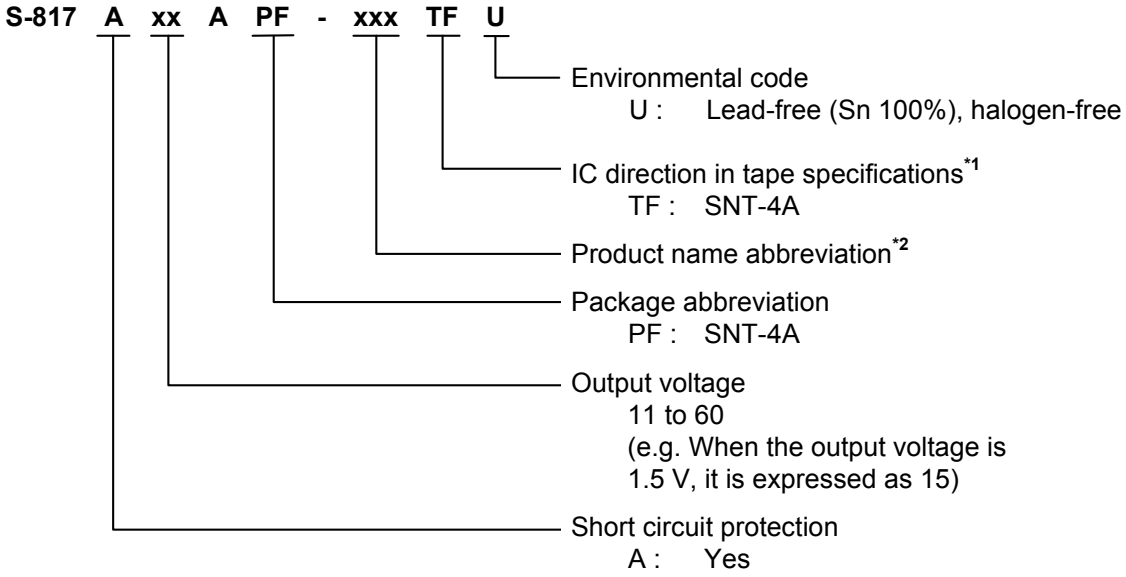

***1.** Refer to the tape drawing.
***2.** Refer to "**3. Product name list**".

1. 1. 2 SC-82AB and SOT-23-5 packages

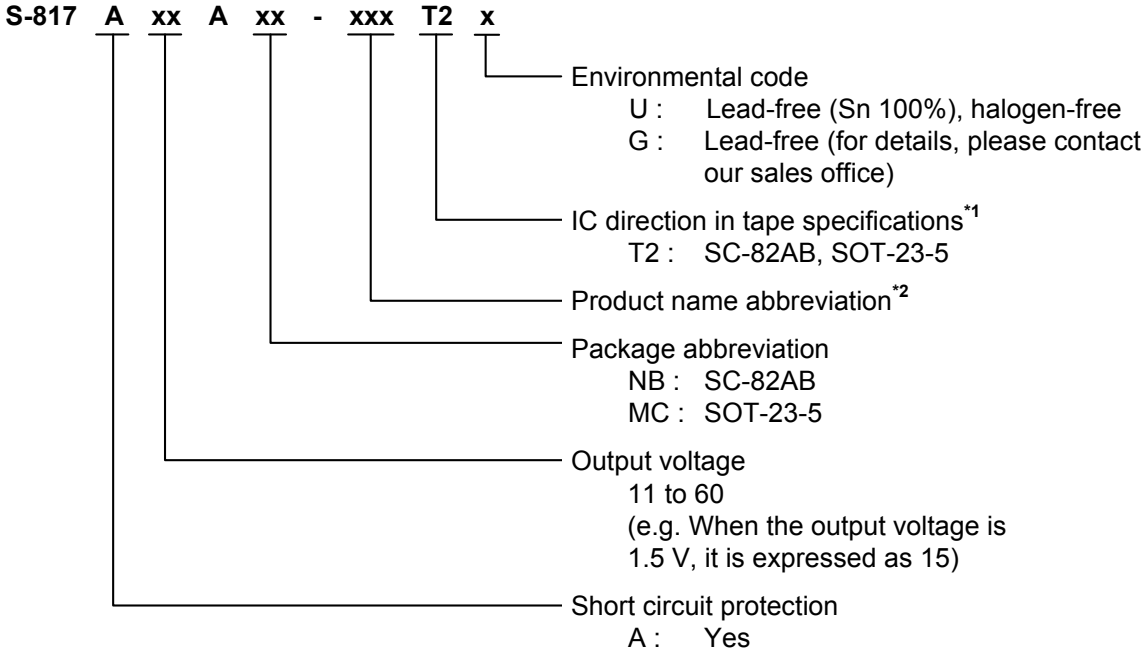

***1.** Refer to the tape drawing.
***2.** Refer to "**3. Product name list**".

1. 2 S-817B Series

1. 2. 1 SOT-23-5 and SOT-89-3 packages

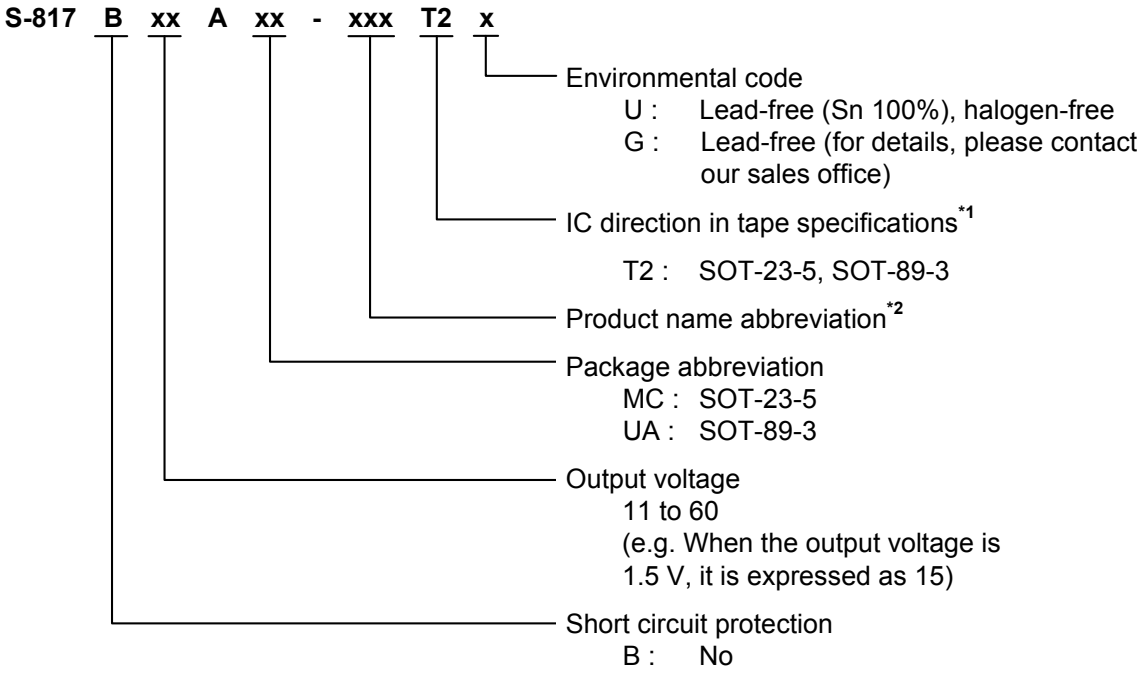

***1.** Refer to the tape drawing.
***2.** Refer to "**3. Product name list**".

1. 2. 2 TO-92 package

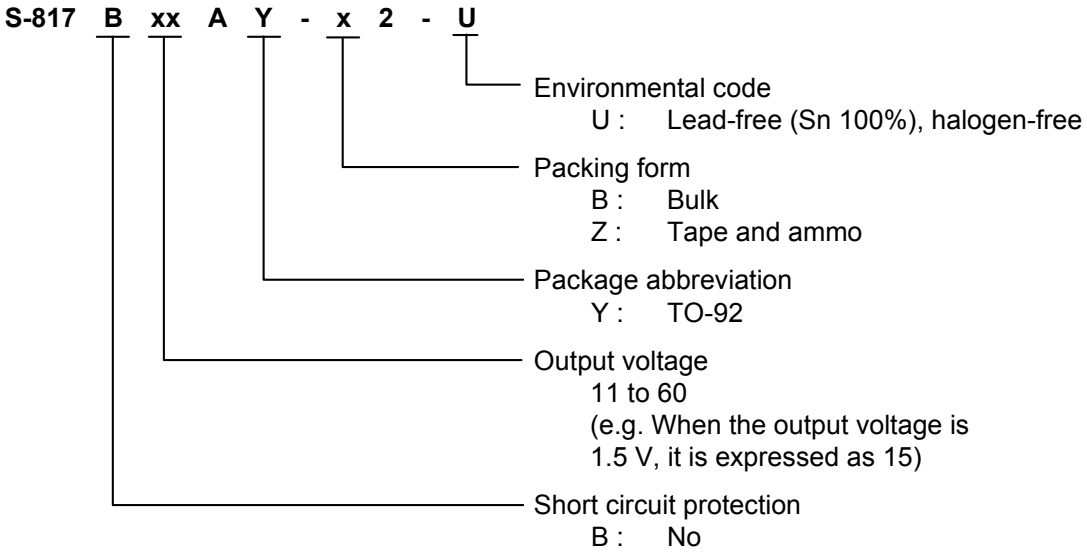

2. Packages

Package name	Drawing code				
	Package	Tape	Reel	Zigzag	Land
SNT-4A	PF004-A-P-SD	PF004-A-C-SD	PF004-A-R-SD	—	PF004-A-L-SD
SC-82AB	NP004-A-P-SD	NP004-A-C-SD NP004-A-C-S1	NP004-A-R-SD	—	—
SOT-23-5	MP005-A-P-SD	MP005-A-C-SD	MP005-A-R-SD	—	—
SOT-89-3	UP003-A-P-SD	UP003-A-C-SD	UP003-A-R-SD	—	—
TO-92 (Bulk)	YS003-D-P-SD	—	—	—	—
TO-92 (Tape and ammo)	YZ003-E-P-SD	YZ003-E-C-SD	—	YZ003-E-Z-SD	—

3. Product name list

3. 1 S-817A Series

Table 1

Output voltage	SNT-4A	SC-82AB	SOT-23-5
1.1 V ± 2.0%	S-817A11APF-CUATFU	S-817A11ANB-CUAT2x	—
1.2 V ± 2.0%	S-817A12APF-CUBTFU	S-817A12ANB-CUBT2x	—
1.3 V ± 2.0%	S-817A13APF-CUCTFU	S-817A13ANB-CUCT2x	—
1.4 V ± 2.0%	S-817A14APF-CUDTFU	S-817A14ANB-CUDT2x	S-817A14AMC-CUDT2x
1.5 V ± 2.0%	S-817A15APF-CUETFU	S-817A15ANB-CUET2x	—
1.6 V ± 2.0%	S-817A16APF-CUFTFU	S-817A16ANB-CUFT2x	S-817A16AMC-CUFT2x
1.7 V ± 2.0%	S-817A17APF-CUGTFU	S-817A17ANB-CUGT2x	—
1.8 V ± 2.0%	S-817A18APF-CUHTFU	S-817A18ANB-CUHT2x	—
1.9 V ± 2.0%	S-817A19APF-CUITFU	S-817A19ANB-CUIT2x	—
2.0 V ± 2.0%	S-817A20APF-CUJTFU	S-817A20ANB-CUJT2x	—
2.1 V ± 2.0%	S-817A21APF-CUKTFU	S-817A21ANB-CUKT2x	—
2.2 V ± 2.0%	S-817A22APF-CULTFU	S-817A22ANB-CULT2x	—
2.3 V ± 2.0%	S-817A23APF-CUMTFU	S-817A23ANB-CUMT2x	—
2.4 V ± 2.0%	S-817A24APF-CUNTFU	S-817A24ANB-CUNT2x	—
2.5 V ± 2.0%	S-817A25APF-CUOTFU	S-817A25ANB-CUOT2x	—
2.6 V ± 2.0%	S-817A26APF-CUPTFU	S-817A26ANB-CUPT2x	—
2.7 V ± 2.0%	S-817A27APF-CUQTFU	S-817A27ANB-CUQT2x	—
2.8 V ± 2.0%	S-817A28APF-CURTFU	S-817A28ANB-CURT2x	—
2.9 V ± 2.0%	S-817A29APF-CUSTFU	S-817A29ANB-CUST2x	—
3.0 V ± 2.0%	S-817A30APF-CUTTFU	S-817A30ANB-CUTT2x	—
3.1 V ± 2.0%	S-817A31APF-CUUTFU	S-817A31ANB-CUUT2x	—
3.2 V ± 2.0%	S-817A32APF-CUVTFU	S-817A32ANB-CUVT2x	—
3.3 V ± 2.0%	S-817A33APF-CUWTFU	S-817A33ANB-CUWT2x	—
3.4 V ± 2.0%	S-817A34APF-CUXTFU	S-817A34ANB-CUXT2x	—
3.5 V ± 2.0%	S-817A35APF-CUYTFU	S-817A35ANB-CUYT2x	—
3.6 V ± 2.0%	S-817A36APF-CUZTFU	S-817A36ANB-CUZT2x	—
3.7 V ± 2.0%	S-817A37APF-CVATFU	S-817A37ANB-CVAT2x	—
3.8 V ± 2.0%	S-817A38APF-CVBTFU	S-817A38ANB-CVBT2x	—
3.9 V ± 2.0%	S-817A39APF-CVCTFU	S-817A39ANB-CVCT2x	—
4.0 V ± 2.0%	S-817A40APF-CVDTFU	S-817A40ANB-CVDT2x	—
4.1 V ± 2.0%	S-817A41APF-CVETFU	S-817A41ANB-CVET2x	—
4.2 V ± 2.0%	S-817A42APF-CVFTFU	S-817A42ANB-CVFT2x	—
4.3 V ± 2.0%	S-817A43APF-CVGTFU	S-817A43ANB-CVGT2x	—
4.4 V ± 2.0%	S-817A44APF-CVHTFU	S-817A44ANB-CVHT2x	—
4.5 V ± 2.0%	S-817A45APF-CVITFU	S-817A45ANB-CVIT2x	—
4.6 V ± 2.0%	S-817A46APF-CVJTFU	S-817A46ANB-CVJT2x	—
4.7 V ± 2.0%	S-817A47APF-CVKTFU	S-817A47ANB-CVKT2x	—
4.8 V ± 2.0%	S-817A48APF-CVLTFU	S-817A48ANB-CVLT2x	—
4.9 V ± 2.0%	S-817A49APF-CVMTFU	S-817A49ANB-CVMT2x	—
5.0 V ± 2.0%	S-817A50APF-CVNTFU	S-817A50ANB-CVNT2x	—
5.1 V ± 2.0%	S-817A51APF-CVOTFU	S-817A51ANB-CVOT2x	—
5.2 V ± 2.0%	S-817A52APF-CVPTFU	S-817A52ANB-CVPT2x	—
5.3 V ± 2.0%	S-817A53APF-CVQTFU	S-817A53ANB-CVQT2x	—
5.4 V ± 2.0%	S-817A54APF-CVRTFU	S-817A54ANB-CVRT2x	—
5.5 V ± 2.0%	S-817A55APF-CVSTFU	S-817A55ANB-CVST2x	—
5.6 V ± 2.0%	S-817A56APF-CVTTFU	S-817A56ANB-CVTT2x	—
5.7 V ± 2.0%	S-817A57APF-CVUTFU	S-817A57ANB-CVUT2x	—
5.8 V ± 2.0%	S-817A58APF-CVVTFU	S-817A58ANB-CVVT2x	—
5.9 V ± 2.0%	S-817A59APF-CVWTFU	S-817A59ANB-CVWT2x	—
6.0 V ± 2.0%	S-817A60APF-CVXTFU	S-817A60ANB-CVXT2x	—

Remark 1. Please contact our sales office for products other than the above.
2. x: G or U
3. Please select products of environmental code = U for Sn 100%, halogen-free products.

3. 2 S-817B Series

Table 2

Output voltage	SOT-23-5	SOT-89-3	TO-92*1
1.1 V ± 2.0%	S-817B11AMC-CWAT2x	S-817B11AUA-CWAT2x	S-817B11AY-n2-U
1.2 V ± 2.0%	S-817B12AMC-CWBT2x	S-817B12AUA-CWBT2x	S-817B12AY-n2-U
1.3 V ± 2.0%	S-817B13AMC-CWCT2x	S-817B13AUA-CWCT2x	S-817B13AY-n2-U
1.4 V ± 2.0%	S-817B14AMC-CWDT2x	S-817B14AUA-CWDT2x	S-817B14AY-n2-U
1.5 V ± 2.0%	S-817B15AMC-CWET2x	S-817B15AUA-CWET2x	S-817B15AY-n2-U
1.6 V ± 2.0%	S-817B16AMC-CWFT2x	S-817B16AUA-CWFT2x	S-817B16AY-n2-U
1.7 V ± 2.0%	S-817B17AMC-CWGT2x	S-817B17AUA-CWGT2x	S-817B17AY-n2-U
1.8 V ± 2.0%	S-817B18AMC-CWHT2x	S-817B18AUA-CWHT2x	S-817B18AY-n2-U
1.9 V ± 2.0%	S-817B19AMC-CWIT2x	S-817B19AUA-CWIT2x	S-817B19AY-n2-U
2.0 V ± 2.0%	S-817B20AMC-CWJT2x	S-817B20AUA-CWJT2x	S-817B20AY-n2-U
2.1 V ± 2.0%	S-817B21AMC-CWKT2x	S-817B21AUA-CWKT2x	S-817B21AY-n2-U
2.2 V ± 2.0%	S-817B22AMC-CWLT2x	S-817B22AUA-CWLT2x	S-817B22AY-n2-U
2.3 V ± 2.0%	S-817B23AMC-CWMT2x	S-817B23AUA-CWMT2x	S-817B23AY-n2-U
2.4 V ± 2.0%	S-817B24AMC-CWNT2x	S-817B24AUA-CWNT2x	S-817B24AY-n2-U
2.5 V ± 2.0%	S-817B25AMC-CWOT2x	S-817B25AUA-CWOT2x	S-817B25AY-n2-U
2.6 V ± 2.0%	S-817B26AMC-CWPT2x	S-817B26AUA-CWPT2x	S-817B26AY-n2-U
2.7 V ± 2.0%	S-817B27AMC-CWQT2x	S-817B27AUA-CWQT2x	S-817B27AY-n2-U
2.8 V ± 2.0%	S-817B28AMC-CWRT2x	S-817B28AUA-CWRT2x	S-817B28AY-n2-U
2.9 V ± 2.0%	S-817B29AMC-CWST2x	S-817B29AUA-CWST2x	S-817B29AY-n2-U
3.0 V ± 2.0%	S-817B30AMC-CWTT2x	S-817B30AUA-CWTT2x	S-817B30AY-n2-U
3.1 V ± 2.0%	S-817B31AMC-CWUT2x	S-817B31AUA-CWUT2x	S-817B31AY-n2-U
3.2 V ± 2.0%	S-817B32AMC-CWVT2x	S-817B32AUA-CWVT2x	S-817B32AY-n2-U
3.3 V ± 2.0%	S-817B33AMC-CWWT2x	S-817B33AUA-CWWT2x	S-817B33AY-n2-U
3.4 V ± 2.0%	S-817B34AMC-CWXT2x	S-817B34AUA-CWXT2x	S-817B34AY-n2-U
3.5 V ± 2.0%	S-817B35AMC-CWYT2x	S-817B35AUA-CWYT2x	S-817B35AY-n2-U
3.6 V ± 2.0%	S-817B36AMC-CWZT2x	S-817B36AUA-CWZT2x	S-817B36AY-n2-U
3.7 V ± 2.0%	S-817B37AMC-CXAT2x	S-817B37AUA-CXAT2x	S-817B37AY-n2-U
3.8 V ± 2.0%	S-817B38AMC-CXBT2x	S-817B38AUA-CXBT2x	S-817B38AY-n2-U
3.9 V ± 2.0%	S-817B39AMC-CXCT2x	S-817B39AUA-CXCT2x	S-817B39AY-n2-U
4.0 V ± 2.0%	S-817B40AMC-CXDT2x	S-817B40AUA-CXDT2x	S-817B40AY-n2-U
4.1 V ± 2.0%	S-817B41AMC-CXET2x	S-817B41AUA-CXET2x	S-817B41AY-n2-U
4.2 V ± 2.0%	S-817B42AMC-CXFT2x	S-817B42AUA-CXFT2x	S-817B42AY-n2-U
4.3 V ± 2.0%	S-817B43AMC-CXGT2x	S-817B43AUA-CXGT2x	S-817B43AY-n2-U
4.4 V ± 2.0%	S-817B44AMC-CXHT2x	S-817B44AUA-CXHT2x	S-817B44AY-n2-U
4.5 V ± 2.0%	S-817B45AMC-CXIT2x	S-817B45AUA-CXIT2x	S-817B45AY-n2-U
4.6 V ± 2.0%	S-817B46AMC-CXJT2x	S-817B46AUA-CXJT2x	S-817B46AY-n2-U
4.7 V ± 2.0%	S-817B47AMC-CXKT2x	S-817B47AUA-CXKT2x	S-817B47AY-n2-U
4.8 V ± 2.0%	S-817B48AMC-CXLT2x	S-817B48AUA-CXLT2x	S-817B48AY-n2-U
4.9 V ± 2.0%	S-817B49AMC-CXMT2x	S-817B49AUA-CXMT2x	S-817B49AY-n2-U
5.0 V ± 2.0%	S-817B50AMC-CXNT2x	S-817B50AUA-CXNT2x	S-817B50AY-n2-U
5.1 V ± 2.0%	S-817B51AMC-CXOT2x	S-817B51AUA-CXOT2x	S-817B51AY-n2-U
5.2 V ± 2.0%	S-817B52AMC-CXPT2x	S-817B52AUA-CXPT2x	S-817B52AY-n2-U
5.3 V ± 2.0%	S-817B53AMC-CXQT2x	S-817B53AUA-CXQT2x	S-817B53AY-n2-U
5.4 V ± 2.0%	S-817B54AMC-CXRT2x	S-817B54AUA-CXRT2x	S-817B54AY-n2-U
5.5 V ± 2.0%	S-817B55AMC-CXST2x	S-817B55AUA-CXST2x	S-817B55AY-n2-U
5.6 V ± 2.0%	S-817B56AMC-CXTT2x	S-817B56AUA-CXTT2x	S-817B56AY-n2-U
5.7 V ± 2.0%	S-817B57AMC-CXUT2x	S-817B57AUA-CXUT2x	S-817B57AY-n2-U
5.8 V ± 2.0%	S-817B58AMC-CXVT2x	S-817B58AUA-CXVT2x	S-817B58AY-n2-U
5.9 V ± 2.0%	S-817B59AMC-CXWT2x	S-817B59AUA-CXWT2x	S-817B59AY-n2-U
6.0 V ± 2.0%	S-817B60AMC-CXXT2x	S-817B60AUA-CXXT2x	S-817B60AY-n2-U

***1**. "n" changes according to the packing form in TO-92.
B: Bulk, Z: Tape and ammo.

Remark 1. x: G or U
2. Please select products of environmental code = U for Sn 100%, halogen-free products.

■ Pin Configurations

SNT-4A
Top view

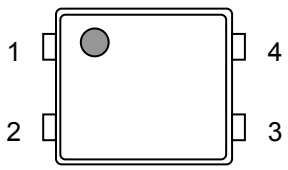

Figure 3

Table 3

Pin No.	Symbol	Description
1	VOUT	Output voltage pin
2	VIN	Input voltage pin
3	VSS	GND pin
4	NC*1	No connection

***1**. The NC pin is electrically open.
The NC pin can be connected to the VIN pin or the VSS pin.

SC-82AB
Top view

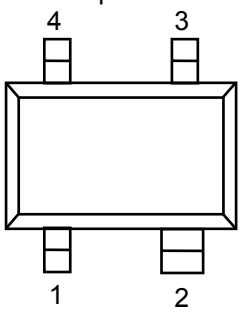

Figure 4

Table 4

Pin No.	Symbol	Description
1	VSS	GND pin
2	VIN	Input voltage pin
3	VOUT	Output voltage pin
4	NC*1	No connection

***1**. The NC pin is electrically open.
The NC pin can be connected to the VIN pin or the VSS pin.

SOT-23-5
Top view

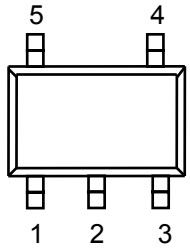

Figure 5

Table 5

Pin No.	Symbol	Description
1	VSS	GND pin
2	VIN	Input voltage pin
3	VOUT	Output voltage pin
4	NC*1	No connection
5	NC*1	No connection

***1**. The NC pin is electrically open.
The NC pin can be connected to the VIN pin or the VSS pin.

SOT-89-3
Top view

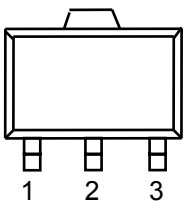

Figure 6

Table 6

Pin No.	Symbol	Description
1	VSS	GND pin
2	VIN	Input voltage pin
3	VOUT	Output voltage pin

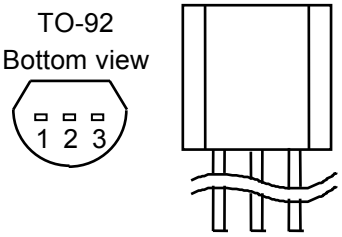

Figure 7

Table 7

Pin No.	Symbol	Description
1	VSS	GND pin
2	VIN	Input voltage pin
3	VOUT	Output voltage pin

■ Absolute Maximum Ratings

Table 8

(Ta=25°C unless otherwise specified)

Item		Symbol	Absolute Maximum Rating	Unit
Input voltage		V_{IN}	V_{SS}−0.3 to V_{SS}+12	V
Output voltage		V_{OUT}	V_{SS}−0.3 to V_{IN}+0.3	V
Power dissipation	SNT-4A	P_D	300*1	mW
	SC-82AB		150 (When not mounted on board)	mW
			400*1	mW
	SOT-23-5		250 (When not mounted on board)	mW
			600*1	mW
	SOT-89-3		500 (When not mounted on board)	mW
			1000*1	mW
	TO-92		400 (When not mounted on board)	mW
			800*1	mW
Operation temperature range		T_{opr}	−40 to +85	°C
Storage temperature		T_{stg}	−40 to +125	°C

***1.** When mounted on board
[Mounted board]
(1) Board size : 114.3 mm × 76.2 mm × t1.6 mm
(2) Board name : JEDEC STANDARD51-7

Caution The absolute maximum ratings are rated values exceeding which the product could suffer physical damage. These values must therefore not be exceeded under any conditions.

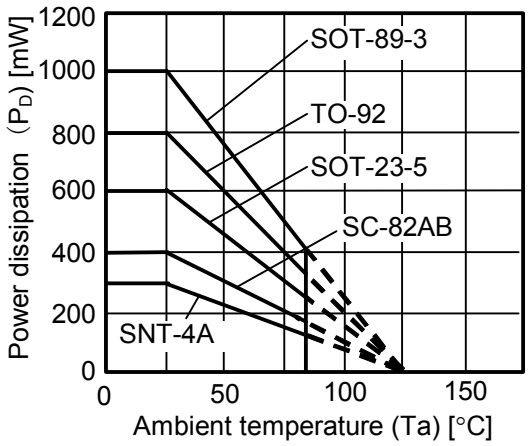

Figure 8 Power dissipation of the package (When mounted on board)

■ Electrical Characteristics

1. S-817A Series

Table 9

(Ta=25°C unless otherwise specified)

Item	Symbol	Condition		Min.	Typ.	Max.	Unit	Measurement circuit
Output voltage*1	$V_{OUT(E)}$	$V_{IN}=V_{OUT(S)}+2$ V, $I_{OUT}=10$ mA		$V_{OUT(S)} \times 0.98$	$V_{OUT(S)}$	$V_{OUT(S)} \times 1.02$	V	1
Output current*2	I_{OUT}	$V_{OUT(S)}+2$ V $\le V_{IN} \le 10$ V	1.1 V $\le V_{OUT(S)} \le$ 1.9 V	20	–	–	mA	3
			2.0 V $\le V_{OUT(S)} \le$ 2.9 V	35	–	–		
			3.0 V $\le V_{OUT(S)} \le$ 3.9 V	50	–	–		
			4.0 V $\le V_{OUT(S)} \le$ 4.9 V	65	–	–		
			5.0 V $\le V_{OUT(S)} \le$ 6.0 V	75	–	–		
Dropout voltage*3	V_{drop}	I_{OUT} = 10 mA	1.1 V $\le V_{OUT(S)} \le$ 1.4 V	–	0.92	1.58	V	1
			1.5 V $\le V_{OUT(S)} \le$ 1.9 V	–	0.58	0.99		
			2.0 V $\le V_{OUT(S)} \le$ 2.4 V	–	0.40	0.67		
			2.5 V $\le V_{OUT(S)} \le$ 2.9 V	–	0.31	0.51		
			3.0 V $\le V_{OUT(S)} \le$ 3.4 V	–	0.25	0.41		
			3.5 V $\le V_{OUT(S)} \le$ 3.9 V	–	0.22	0.35		
			4.0 V $\le V_{OUT(S)} \le$ 4.4 V	–	0.19	0.30		
			4.5 V $\le V_{OUT(S)} \le$ 4.9 V	–	0.18	0.27		
			5.0 V $\le V_{OUT(S)} \le$ 5.4 V	–	0.16	0.25		
			5.5 V $\le V_{OUT(S)} \le$ 6.0 V	–	0.15	0.23		
Line regulation 1	ΔV_{OUT1}	$V_{OUT(S)}+1$ V $\le V_{IN} \le 10$ V, I_{OUT} = 1 mA		–	5	20	mV	
Line regulation 2	ΔV_{OUT2}	$V_{OUT(S)}+1$ V $\le V_{IN} \le 10$ V, I_{OUT} = 1 μA		–	5	20		
Load regulation	ΔV_{OUT3}	$V_{IN}=V_{OUT(S)}+2$ V	1.1 V $\le V_{OUT(S)} \le$ 1.9 V, 1 μA $\le I_{OUT} \le$ 10 mA	–	5	20		
			2.0 V $\le V_{OUT(S)} \le$ 2.9 V, 1 μA $\le I_{OUT} \le$ 20 mA	–	10	30		
			3.0 V $\le V_{OUT(S)} \le$ 3.9 V, 1 μA $\le I_{OUT} \le$ 30 mA	–	20	45		
			4.0 V $\le V_{OUT(S)} \le$ 4.9 V, 1 μA $\le I_{OUT} \le$ 40 mA	–	25	65		
			5.0 V $\le V_{OUT(S)} \le$ 6.0 V, 1 μA $\le I_{OUT} \le$ 50 mA	–	35	80		
Output voltage temperature coefficient*4	$\frac{\Delta V_{OUT}}{\Delta Ta \bullet V_{OUT}}$	$V_{IN} = V_{OUT(S)} + 1$ V, I_{OUT} = 10 mA, $-40°C \le Ta \le +85°C$		–	±100	–	ppm /°C	
Current consumption	I_{SS}	$V_{IN} = V_{OUT(S)} + 2$ V, no load		–	1.2	2.5	μA	2
Input voltage	V_{IN}	–		–	–	10	V	1
Short current limit	I_{OS}	$V_{IN} = V_{OUT(S)} + 2$ V, VOUT pin = 0 V		–	40	–	mA	3

***1.** $V_{OUT(S)}$: Set output voltage
$V_{OUT(E)}$: Actual output voltage
Output voltage when fixing I_{OUT}(=10 mA) and inputting $V_{OUT(S)}+2.0$ V.

***2.** The output current at which the output voltage becomes 95% of $V_{OUT(E)}$ after gradually increasing the output current.

***3.** $V_{drop} = V_{IN1}-(V_{OUT(E)} \times 0.98)$
V_{IN1} is the input voltage at which the output voltage becomes 98% of $V_{OUT(E)}$ after gradually decreasing the input voltage.

***4.** A change in the temperature of the output voltage [mV/°C] is calculated using the following equation.

$$\frac{\Delta V_{OUT}}{\Delta Ta}\left[mV/°C\right]^{*1} = V_{OUT(S)}\left[V\right]^{*2} \times \frac{\Delta V_{OUT}}{\Delta Ta \bullet V_{OUT}}\left[ppm/°C\right]^{*3} \div 1000$$

***1.** Change in temperature of output voltage
***2.** Set output voltage
***3.** Output voltage temperature coefficient

2. S-817B Series

Table 10

(Ta=25°C unless otherwise specified)

Item	Symbol	Condition		Min.	Typ.	Max.	Unit	Measur-ement circuit
Output voltage*1	$V_{OUT(E)}$	$V_{IN}=V_{OUT(S)}+2$ V, $I_{OUT}=10$ mA		$V_{OUT(S)} \times 0.98$	$V_{OUT(S)}$	$V_{OUT(S)} \times 1.02$	V	1
Output current*2	I_{OUT}	$V_{OUT(S)}+2$ V $\le V_{IN} \le 10$ V	1.1 V $\le V_{OUT(S)} \le$ 1.9 V	20	–	–	mA	3
			2.0 V $\le V_{OUT(S)} \le$ 2.9 V	35	–	–		
			3.0 V $\le V_{OUT(S)} \le$ 3.9 V	50	–	–		
			4.0 V $\le V_{OUT(S)} \le$ 4.9 V	65	–	–		
			5.0 V $\le V_{OUT(S)} \le$ 6.0 V	75	–	–		
Dropout voltage*3	V_{drop}	I_{OUT} = 10 mA	1.1 V $\le V_{OUT(S)} \le$ 1.4 V	–	0.92	1.58	V	1
			1.5 V $\le V_{OUT(S)} \le$ 1.9 V	–	0.58	0.99		
			2.0 V $\le V_{OUT(S)} \le$ 2.4 V	–	0.40	0.67		
			2.5 V $\le V_{OUT(S)} \le$ 2.9 V	–	0.31	0.51		
			3.0 V $\le V_{OUT(S)} \le$ 3.4 V	–	0.25	0.41		
			3.5 V $\le V_{OUT(S)} \le$ 3.9 V	–	0.22	0.35		
			4.0 V $\le V_{OUT(S)} \le$ 4.4 V	–	0.19	0.30		
			4.5 V $\le V_{OUT(S)} \le$ 4.9 V	–	0.18	0.27		
			5.0 V $\le V_{OUT(S)} \le$ 5.4 V	–	0.16	0.25		
			5.5 V $\le V_{OUT(S)} \le$ 6.0 V	–	0.15	0.23		
Line regulation 1	ΔV_{OUT1}	$V_{OUT(S)}+1$ V $\le V_{IN} \le 10$ V, I_{OUT} = 1 mA		–	5	20	mV	
Line regulation 2	ΔV_{OUT2}	$V_{OUT(S)}+1$ V $\le V_{IN} \le 10$ V, I_{OUT} = 1 μA		–	5	20		
Load regulation	ΔV_{OUT3}	$V_{IN}=V_{OUT(S)}+2$ V	1.1 V $\le V_{OUT(S)} \le$ 1.9 V, 1 μA $\le I_{OUT} \le$ 10 mA	–	5	20		
			2.0 V $\le V_{OUT(S)} \le$ 2.9 V, 1 μA $\le I_{OUT} \le$ 20 mA	–	10	30		
			3.0 V $\le V_{OUT(S)} \le$ 3.9 V, 1 μA $\le I_{OUT} \le$ 30 mA	–	20	45		
			4.0 V $\le V_{OUT(S)} \le$ 4.9 V, 1 μA $\le I_{OUT} \le$ 40 mA	–	25	65		
			5.0 V $\le V_{OUT(S)} \le$ 6.0 V, 1 μA $\le I_{OUT} \le$ 50 mA	–	35	80		
Output voltage temperature coefficient*4	$\frac{\Delta V_{OUT}}{\Delta Ta \bullet V_{OUT}}$	$V_{IN} = V_{OUT(S)} + 1$ V, I_{OUT} = 10 mA, −40°C $\le$ Ta $\le$ +85°C		–	±100	–	ppm /°C	
Current consumption	I_{SS}	$V_{IN} = V_{OUT(S)} + 2$ V, no load		–	1.2	2.5	μA	2
Input voltage	V_{IN}	–		–	–	10	V	1

***1.** $V_{OUT(S)}$: Set output voltage
$V_{OUT(E)}$: Actual output voltage
Output voltage when fixing I_{OUT}(=10 mA) and inputting $V_{OUT(S)}+2.0$ V.

***2.** The output current at which the output voltage becomes 95% of $V_{OUT(E)}$ after gradually increasing the output current.

***3.** $V_{drop} = V_{IN1}-(V_{OUT(E)} \times 0.98)$
V_{IN1} is the input voltage at which the output voltage becomes 98% of $V_{OUT(E)}$ after gradually decreasing the input voltage.

***4.** A change in the temperature of the output voltage [mV/°C] is calculated using the following equation.

$$\frac{\Delta V_{OUT}}{\Delta Ta}\left[\text{mV/°C}\right]^{*1} = V_{OUT(S)}\left[\text{V}\right]^{*2} \times \frac{\Delta V_{OUT}}{\Delta Ta \bullet V_{OUT}}\left[\text{ppm/°C}\right]^{*3} \div 1000$$

***1.** Change in temperature of output voltage
***2.** Set output voltage
***3.** Output voltage temperature coefficient

■ Measurement Circuits

1.

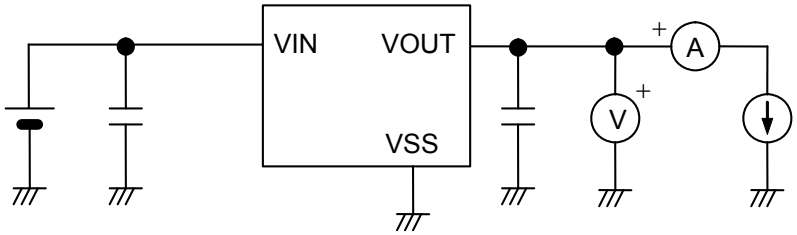

Figure 9

2.

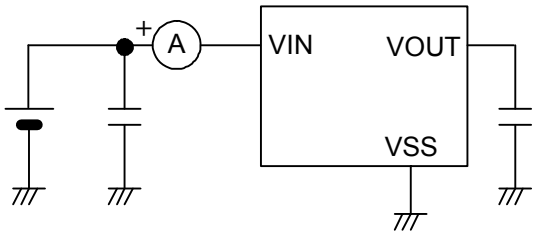

Figure 10

3.

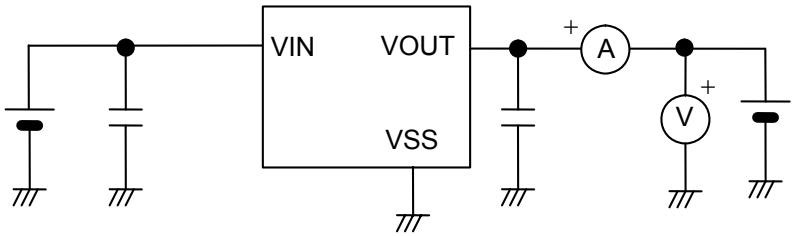

Figure 11

■ Standard Circuit

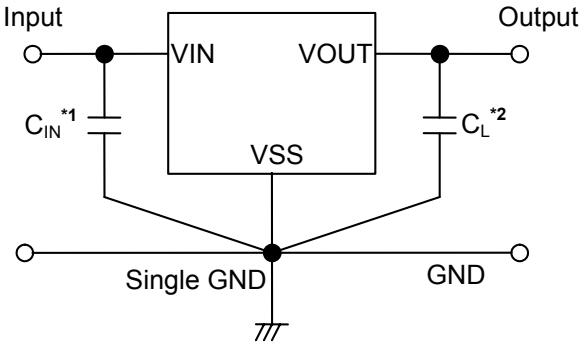

***1.** C_{IN} is a capacitor for stabilizing the input.
***2.** In addition to tantalum capacitor, a ceramic capacitor of 0.1 μF or more can be used as C_L.

Figure 12

Caution The above connection diagram and constant will not guarantee successful operation. Perform through evaluation using the actual application to set the constant.

■ Explanation of Terms

1. Low ESR

ESR is the abbreviation for Equivalent Series Resistance.
Low ESR can be used as the output capacitor (C_L) in the S-817 Series.

2. Output voltage (V_{OUT})

The accuracy of the output voltage is ±2.0% guaranteed under the specified conditions for input voltage, which differs depending upon the product items, output current, and temperature.

Caution **If the above conditions change, the output voltage value may vary and exceed the accuracy range of the output voltage. Refer to "■ Electrical Characteristics" and "■ Characteristics (Typical Data)" for details.**

3. Line regulations 1 and 2 (ΔV_{OUT1}, ΔV_{OUT2})

Indicate the input voltage dependencies of output voltage. That is, the values show how much the output voltage changes due to a change in the input voltage with the output current remained unchanged.

4. Load regulation (ΔV_{OUT3})

Indicates the output current dependencies of output voltage. That is, the values show how much the output voltage changes due to a change in the output current with the input voltage remained unchanged.

5. Dropout voltage (V_{drop})

Indicates the difference between input voltage (V_{IN1}) and the output voltage when; decreasing input voltage (V_{IN}) gradually until the output voltage has dropped out to the value of 98% of the actual output voltage ($V_{OUT(E)}$).
$V_{drop} = V_{IN1} - (V_{OUT(E)} \times 0.98)$

6. Output voltage temperature coefficient $\left(\frac{\Delta V_{OUT}}{\Delta Ta \bullet V_{OUT}}\right)$

The shaded area in **Figure 13** is the range where V_{OUT} varies in the operation temperature range when the output voltage temperature coefficient is ±100 ppm/°C.

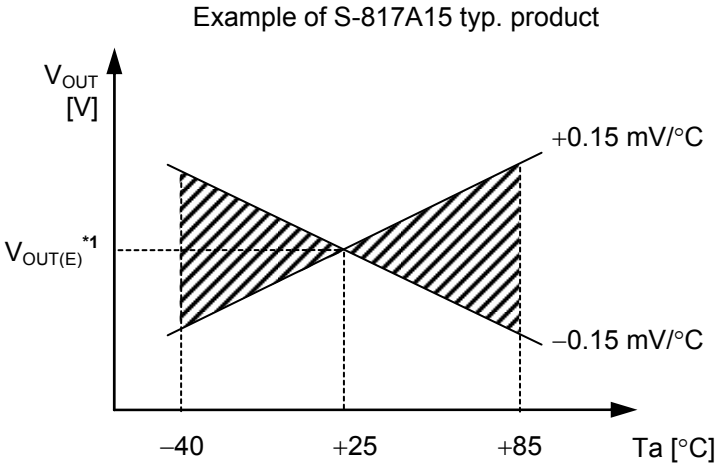

***1.** $V_{OUT(E)}$ is the value of the output voltage measured at Ta = +25°C.

Figure 13

A change in the temperature of the output voltage [mV/°C] is calculated using the following equation.

$$\frac{\Delta V_{OUT}}{\Delta Ta}\ [\text{mV/°C}]^{*1} = V_{OUT(S)}\ [\text{V}]^{*2} \times \frac{\Delta V_{OUT}}{\Delta Ta \bullet V_{OUT}}\ [\text{ppm/°C}]^{*3} \div 1000$$

***1.** Change in temperature of output voltage
***2.** Set output voltage
***3.** Output voltage temperature coefficient

■ Operation

1. Basic Operation

Figure 14 shows the block diagram of the S-817 Series.
The error amplifier compares the reference voltage (V_{ref}) with feedback voltage (V_{fb}), which is the output voltage resistance-divided by feedback resistors (R_s and R_f). It supplies the gate voltage necessary to maintain the constant output voltage which is not influenced by the input voltage and temperature change, to the output transistor.

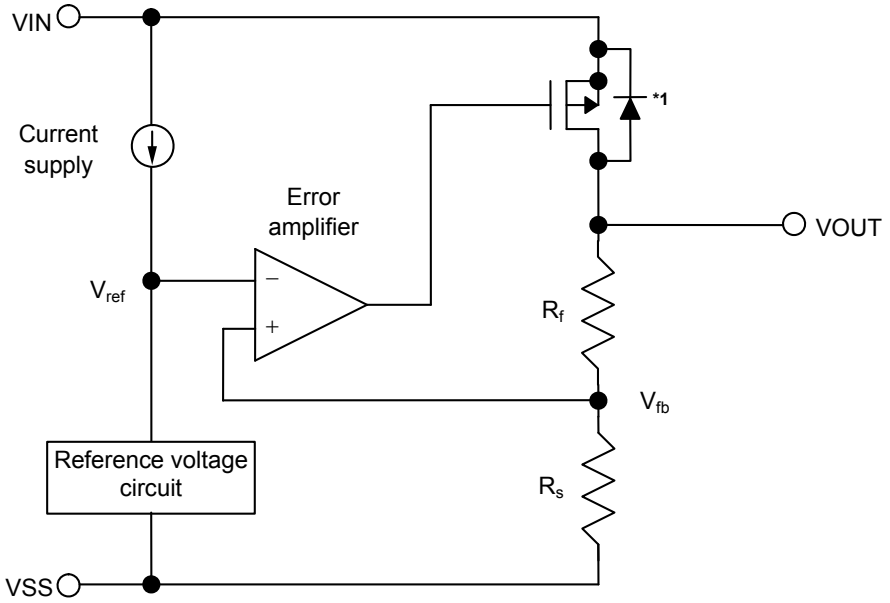

***1.** Parasitic diode

Figure 14

2. Output Transistor

In the S-817 Series, a low on-resistance P-channel MOS FET is used as the output transistor.
Be sure that V_{OUT} does not exceed V_{IN}+0.3 V to prevent the voltage regulator from being damaged due to reverse current flowing from VOUT pin through a parasitic diode to VIN pin, when the potential of V_{OUT} became higher than V_{IN}.

3. Short Circuit Protection

The S-817A Series incorporates a short circuit protection to protect the output transistor against short circuit between VOUT pin and VSS pin. The short-circuit protection controls output current against V_{OUT} voltage as shown in "**1. Output Voltage vs. Output Current (When load current increases)**" in "■ **Characteristics (Typical Data)**", and suppresses output current at about 40 mA even if VOUT and VSS pins are short-circuited.
The short-circuit protection can not be a thermal protection at the same time. Attention should be paid to the input voltage and the load current under the actual condition so as not to exceed the power dissipation of the package including the case for short-circuit.
When the output current is large and the difference between input and output voltage is large even if not shorted, the short-circuit protection works and the output current is suppressed to the specified value. For details, refer to "**3. Maximum Output Current vs. Input Voltage**" in "■ **Characteristics (Typical Data)**".
In addition, the S-817B Series is removing a short-circuit protection, and is the product which enabled it to pass large current.

■ Selection of Output Capacitor (C_L)

To stabilize operation against variation in output load, an output capacitor (C_L) must be mounted between VOUT and VSS in the S-817 Series because the phase is compensated with the help of the internal phase compensation circuit and the ESR of the output capacitor.

When selecting a ceramic or an OS capacitor, the capacitance should be 0.1 μF or more, and when selecting a tantalum or an aluminum electrolytic capacitor, the capacitance should be 0.1 μF or more and ESR of 30 Ω or less is required.

Attention should be especially paid when an aluminum electrolytic capacitor is used since the ESR may increase at low temperature and has a possibility that oscillation may become large. Sufficient evaluation including temperature characteristics is indispensable. Overshoot and undershoot characteristics differ depending upon the type of the output capacitor. Refer to C_L dependencies of "**1. Transient Response Characteristics (Typical data, Ta=25°C)**" in "■ **Reference Data**".

■ Application Circuits

1. Output Current Boosting Circuit

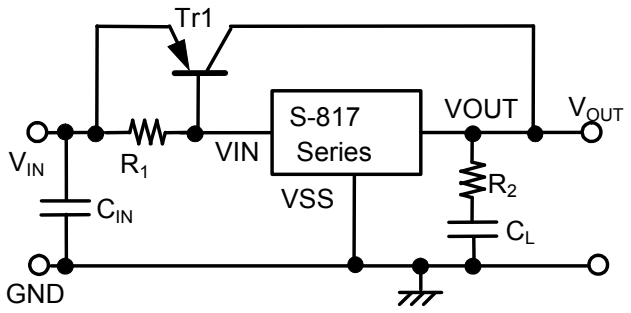

Figure 15

As shown in **Figure 15**, the output current can be boosted by externally attaching a PNP transistor. The base current of the PNP transistor is controlled so that output voltage (V_{OUT}) goes the voltage specified in the S-817 Series when base-emitter voltage (V_{BE}) necessary to turn on the PNP transistor is obtained between input voltage (V_{IN}) and the S-817 Series power source pin (VIN).
The following are tips and hints for selecting and ensuring optimum use of external parts

- PNP transistor (Tr1):
  1. Set h_{FE} to approx. 100 to 400.
  2. Confirm that no problem occurs due to power dissipation under normal operation conditions.
- Resistor (R_1):
  Generally set R_1 to 1 kΩ ÷ $V_{OUT(S)}$ (the voltage set in the S-817 Series) or more.
- Output capacitor (C_L):
  Output capacitor (C_L) is effective in minimizing output fluctuation at power-on or due to power or load fluctuation, but oscillation might occur. Always connect resistor R_2 in series to output capacitor (C_L).
- Resistor (R_2): Set R_2 to 2 Ω × $V_{OUT(S)}$ or more.
- DO NOT attach a capacitor between the S-817 Series power source (V_{IN}) and GND pins or between base-emitter of the PNP transistor to avoid oscillation.
- To improve transient response characteristics of the output current boosting circuit shown in **Figure 15**, check that no problem occurs due to output fluctuation at power-on or due to power or load fluctuation under normal operating conditions.
- Pay attention to the short current limit circuit incorporated into the S-817 Series because it does not function as a shortcircuiting protection circuit for this boosting circuit.

The following graphs show the examples of input-output voltage characteristics (Ta=25°C, typ.) in the output current boosting circuit as seen in **Figure 15**:

1. 1 S-817A11ANB/S-817B11AMC

Tr1 : 2SA1213Y, R_1 : 1 kΩ, C_L : 10 μF, R_2 : 2 Ω

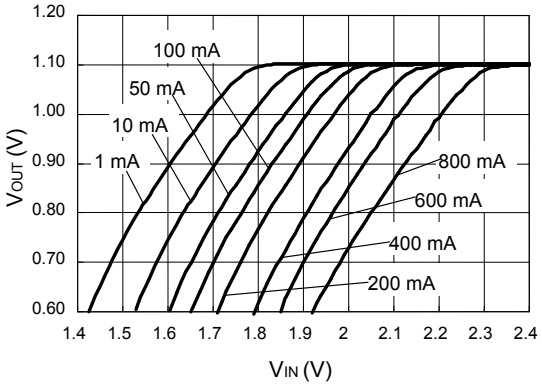

1. 2 S-817A50ANB/S-817B50AMC

Tr1 : 2SA1213Y, R_1 : 200 Ω, C_L : 10 μF, R_2 : 10 Ω

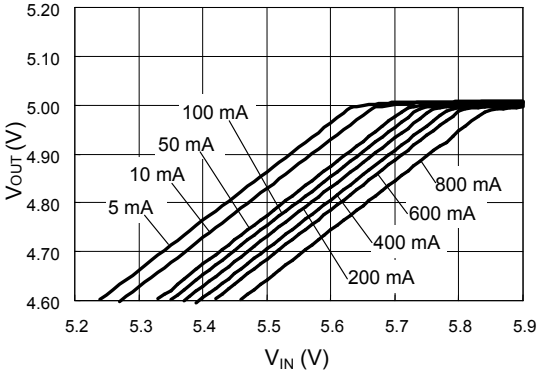

2. Constant Current Circuits

2. 1 Constant Current Circuit

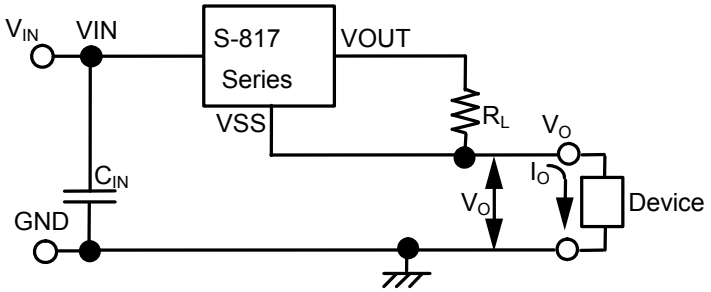

Figure 16

2. 2 Constant Current Boosting Circuit

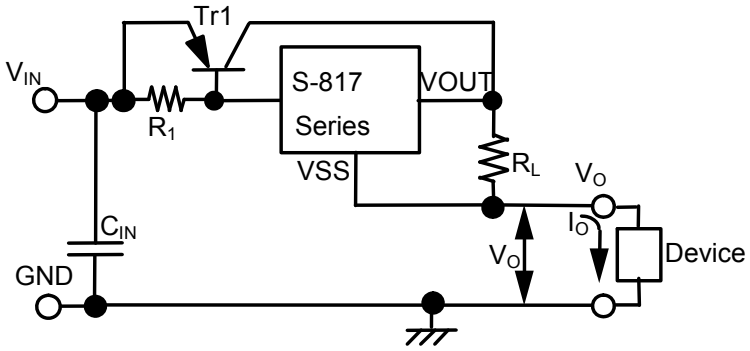

Figure 17

The S-817 Series can be configured as a constant current circuit. Refer to **Figure 16** and **Figure 17**. Constant amperage (I_O) is calculated using the following equation ($V_{OUT(E)}$: Actual output voltage):
$I_O = (V_{OUT(E)} \div R_L) + I_{SS}$.

Note that by using a circuit in **Figure 16**, it is impossible to set the better driving ability to the constant amperage (I_O) than the S-817 Series basically has.
To gain the driving ability which exceeds the S-817 Series, there's a way to combine a constant current circuit and a current boosting circuit, as seen in **Figure 17**.
The maximum input voltage for a constant current circuit is 10 V + the voltage for device (V_O).
It is not recommended to add a capacitor between the VIN (power supply) and VSS pin or the VOUT (output) and VSS pin because the rush current flows at power-on.
The following is a characteristics example of input voltage between V_{IN} and V_O vs. I_O current (Typ. Ta = 25°C) in constant current boosting circuit in **Figure 17**.

Input voltage - I_O current between V_{IN} and V_O

S-817A11ANB, S-817B11AMC, Tr : 2SK1213Y, R_1 : 1 kΩ, V_O=2 V

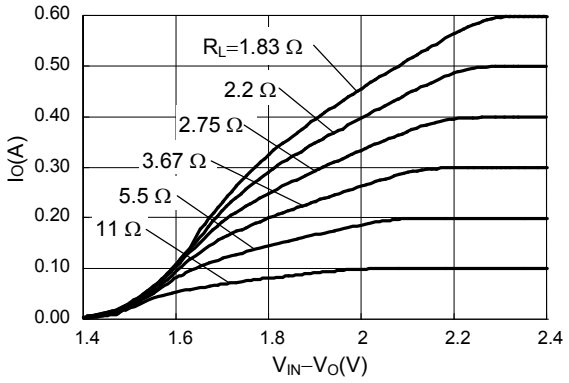

3. Output Voltage Adjustment Circuit (Only for S-817B Series (Product without short circuit protection))

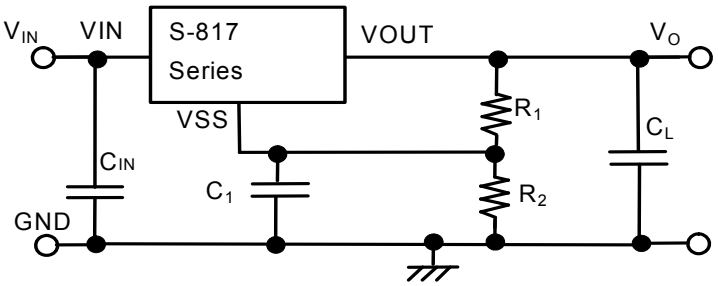

Figure 18

The output voltage can be boosted by using the configuration shown in **Figure 18**. The output voltage (V_O) can be calculated using the following equation ($V_{OUT(E)}$:Actual output voltage):

$$V_O = V_{OUT(E)} \times (R_1 + R_2) \div R_1 + R_2 \times I_{SS}$$

Set the values of resistors R_1 and R_2 so that the S-817 Series is not affected by current consumption (I_{SS}).

Capacitor C_1 is effective in minimizing output fluctuation at power-on or due to power or load fluctuation. Determine the optimum value on your actual device. As shown in **Figure 18**, a capacitor must be mounted between VIN and GND, and between VOUT and GND. But it is not also recommended to attach a capacitor between the S-817 Series power source VIN and VSS pin or between output VOUT and VSS pin because output fluctuation or oscillation at power-on might occur.

■ Precautions

- Wiring patterns for the VIN pin, the VOUT pin and GND should be designed so that the impedance is low. When mounting an output capacitor between the VOUT and VSS pins (C_L) and a capacitor for stabilizing the input between the VIN and VSS pins (C_{IN}), the distance from the capacitors to these pins should be as short as possible.
- Note that generally the output voltage may increase when a series regulator is used at low load current (1.0 μA or less).
- Generally a series regulator may cause oscillation, depending on the selection of external parts. The following conditions are recommended for the S-817 Series. However, be sure to perform sufficient evaluation under the actual usage conditions for selection, including evaluation of temperature characteristics.

  Output capacitor (C_L) : 0.1 μF or more
  Equivalent Series Resistance (ESR) : 30 Ω or less
  Input series resistance (R_{IN}) : 10 Ω or less

- The voltage regulator may oscillate when the impedance of the power supply is high and the input capacitance is small or an input capacitor is not connected.
- Overshoot may occur in the output voltage momentarily if the voltage is rapidly raised at power-on or when the power supply fluctuates. Sufficiently evaluate the output voltage at power-on with the actual device.
- The application conditions for the input voltage, the output voltage, and the load current should not exceed the package power dissipation.
- Do not apply an electrostatic discharge to this IC that exceeds the performance ratings of the built-in electrostatic protection circuit.
- ABLIC Inc. claims no responsibility for any disputes arising out of or in connection with any infringement by products including this IC of patents owned by a third party.

■ Characteristics (Typical Data)

1. Output Voltage vs. Output Current (When load current increases)

(a) S-817A Series

S-817A11A (Ta=25°C)

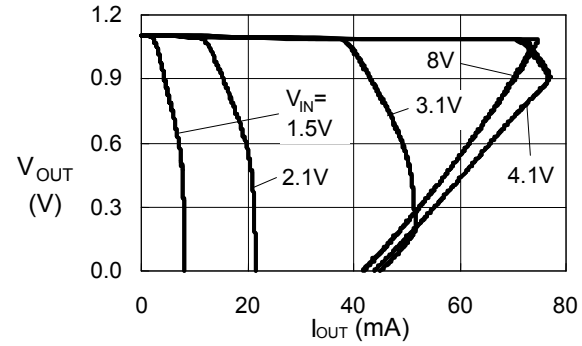

S-817A20A (Ta=25°C)

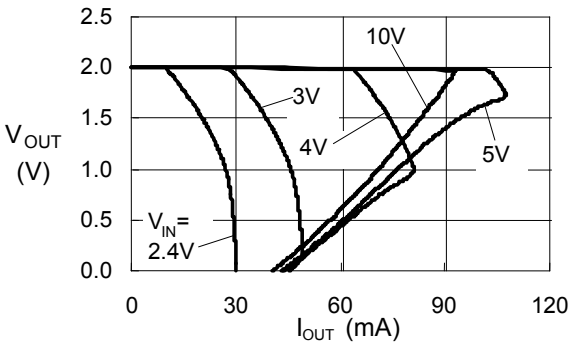

S-817A30A (Ta=25 °C)

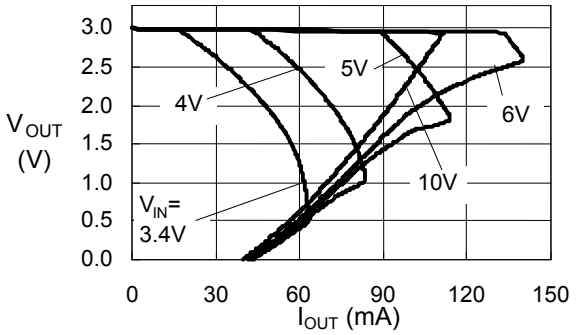

S-817A50A (Ta=25 °C)

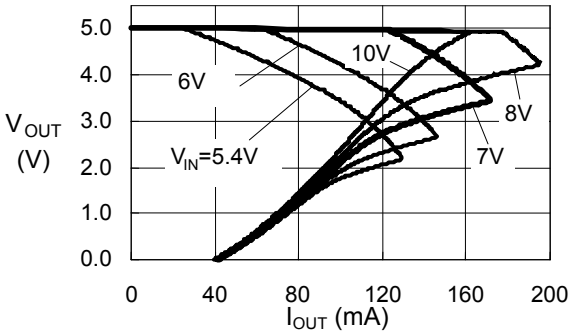

(b) S-817B Series

S-817B11A (Ta=25°C)

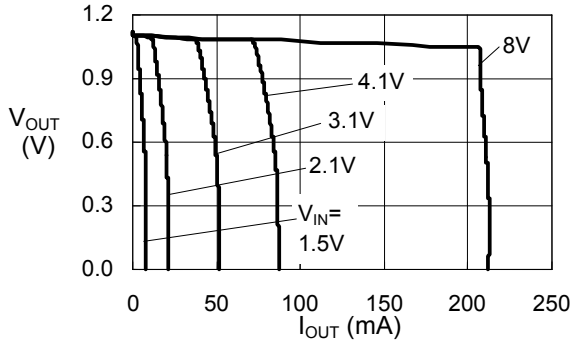

S-817B20A (Ta=25°C)

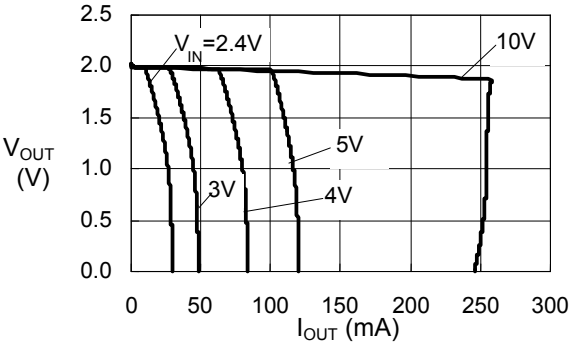

S-817B30A (Ta=25°C)

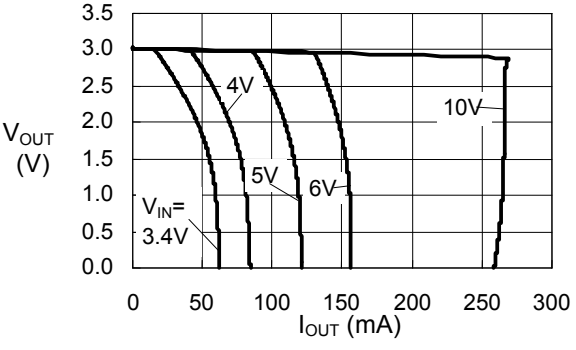

S-817B50A (Ta=25°C)

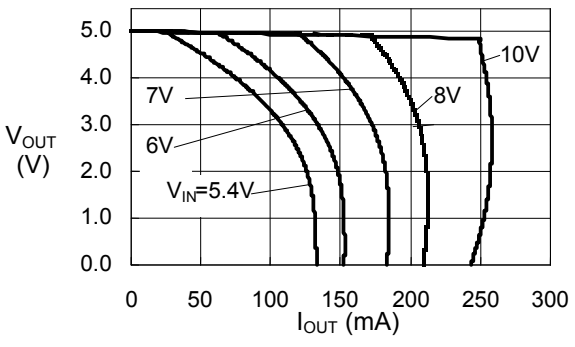

2. Output Voltage vs. Input Voltage

S-817A11A/S-817B11A (Ta=25°C)

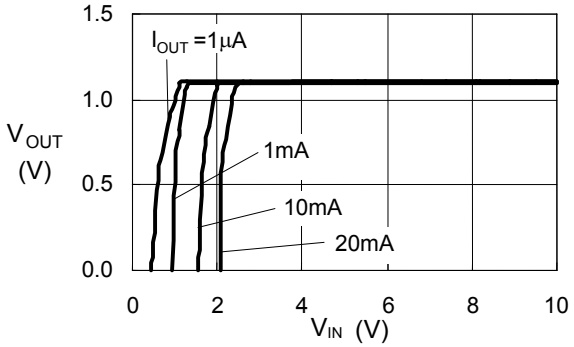

S-817A20A/S-817B20A (Ta=25°C)

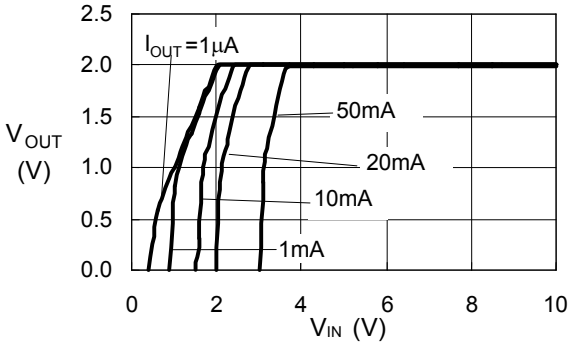

S-817A30A/S-817B30A (Ta=25°C)

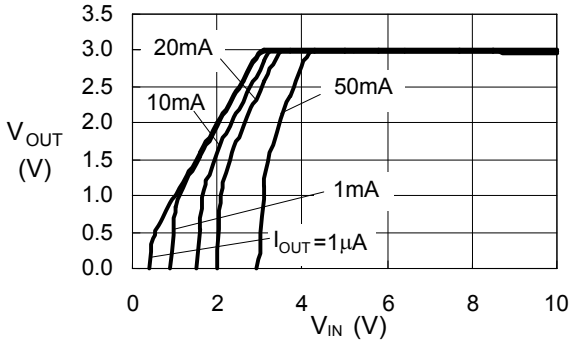

S-817A50A/S-817B50A (Ta=25°C)

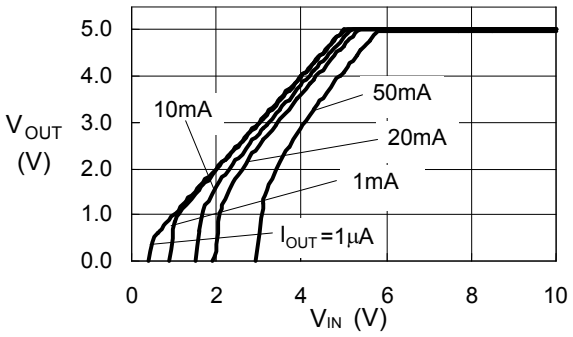

3. Maximum Output Current vs. Input Voltage

(a) S-817A Series

S-817A11A

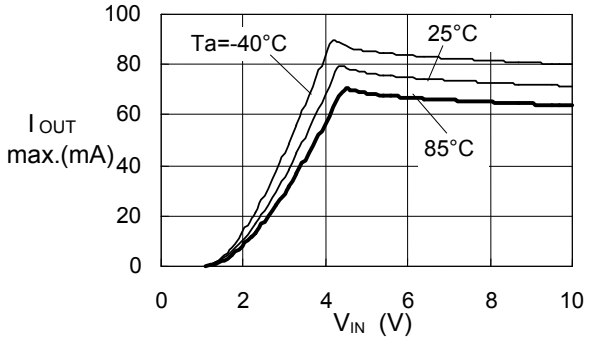

S-817A20A

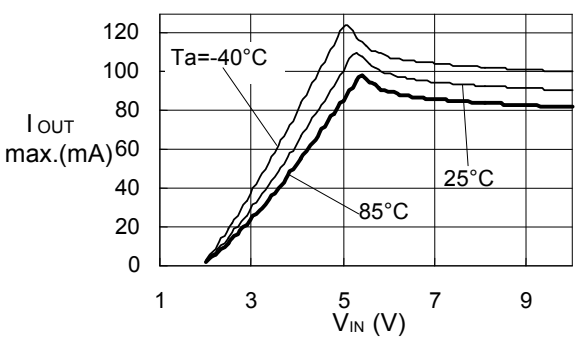

S-817A30A

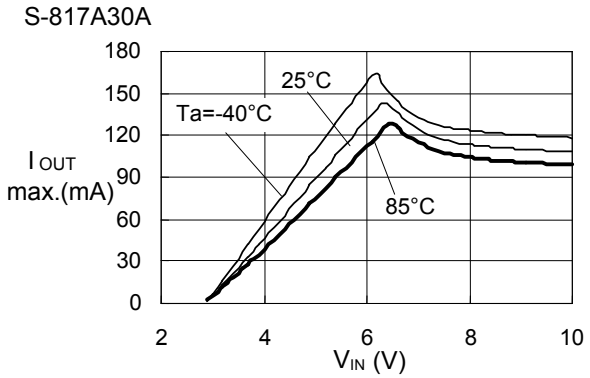

S-817A50A

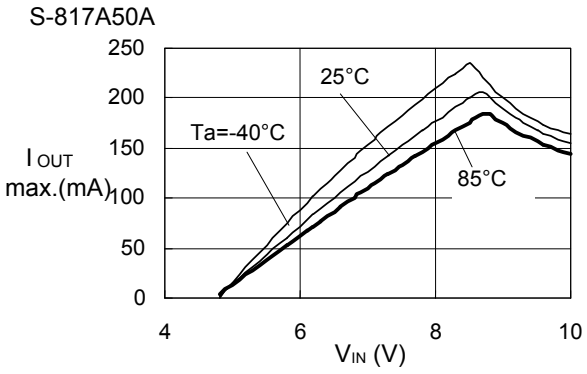

(b) S-817B Series

S-817B11A

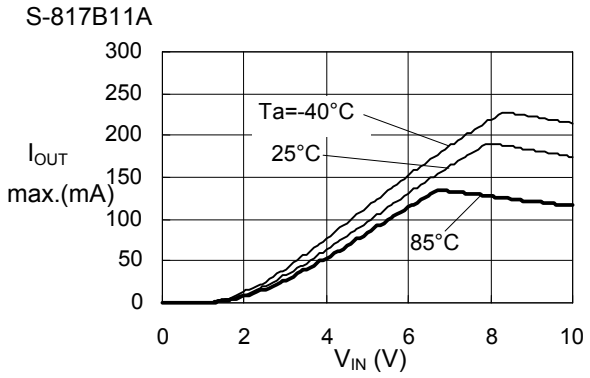

S-817B20A

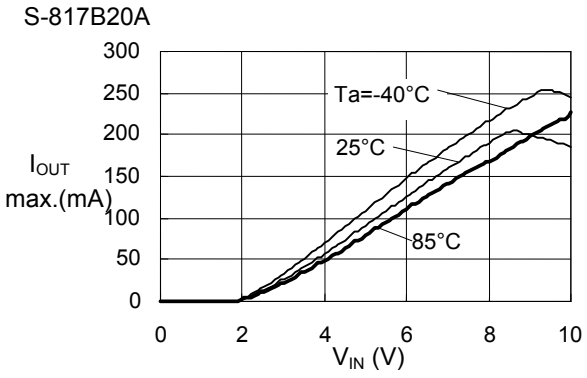

S-817B30A

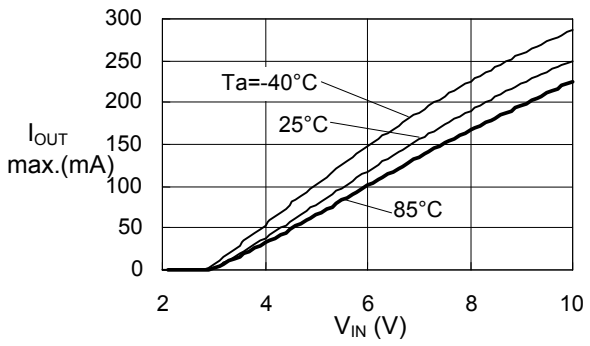

S-817B50A

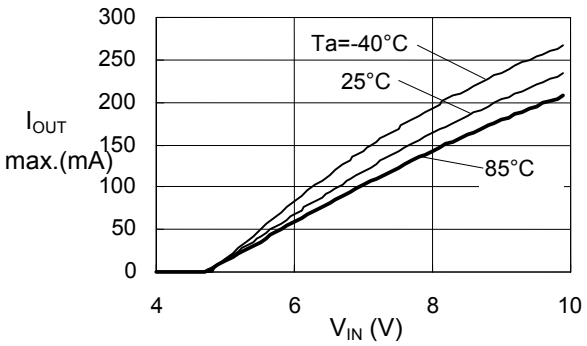

4. Dropout Voltage vs. Output Current

S-817A11A/S-817B11A

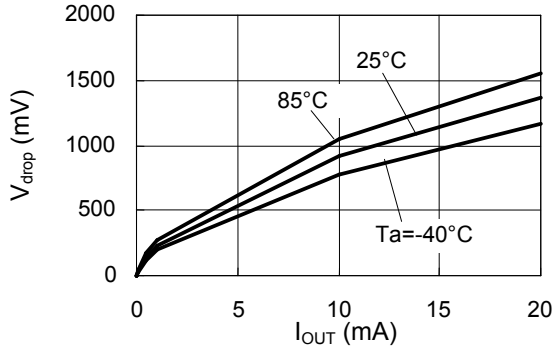

S-817A20A/S-817B20A

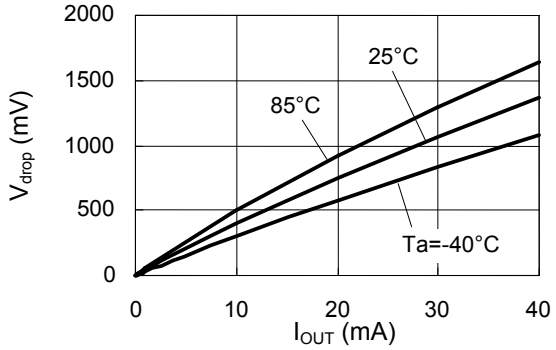

S-817A30A/S-817B30A

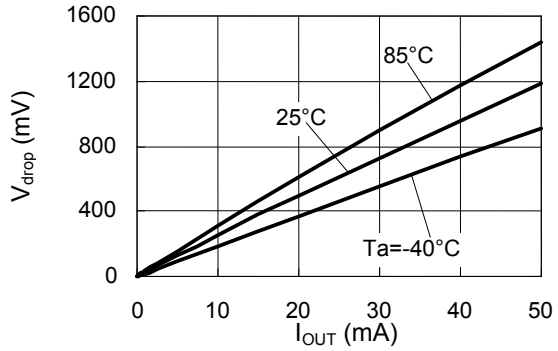

S-817A50A/S-817B50A

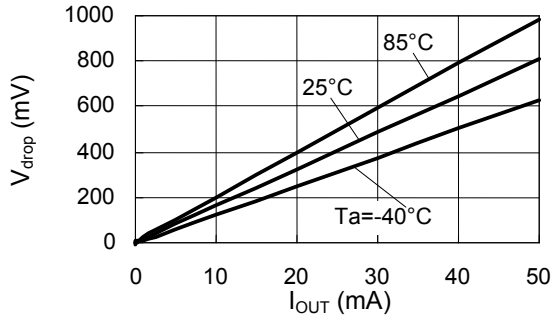

5. Output Voltage vs. Ambient Temperature

S-817A11A/S-817B11A V_{IN}=3.1V, I_{OUT}=10mA

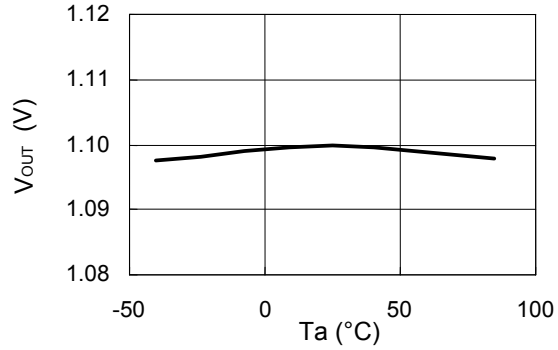

S-817A20A/S-817B20A V_{IN}=4V, I_{OUT}=10mA

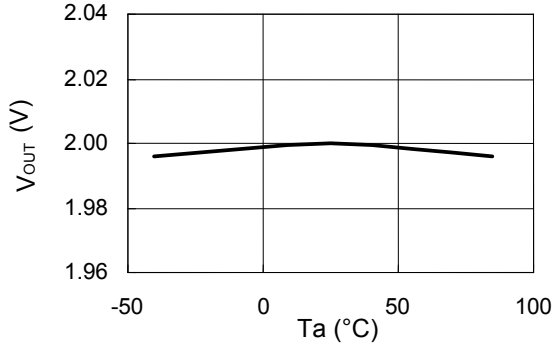

S-817A30A/S-817B30A V_{IN}=5V, I_{OUT}=10mA

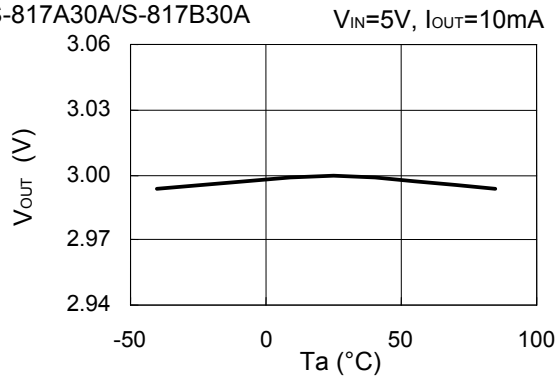

S-817A50A/S-817B50A V_{IN}=7V, I_{OUT}=10mA

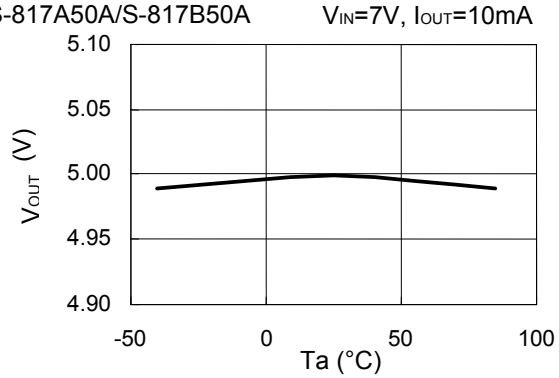

6. Line Regulation 1 vs. Ambient Temperature

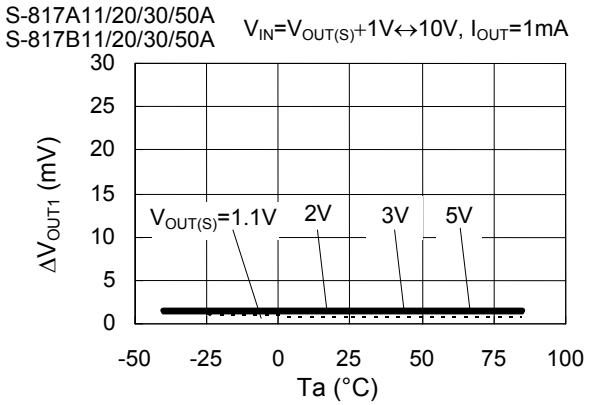

7. Line Regulation 2 vs. Ambient Temperature

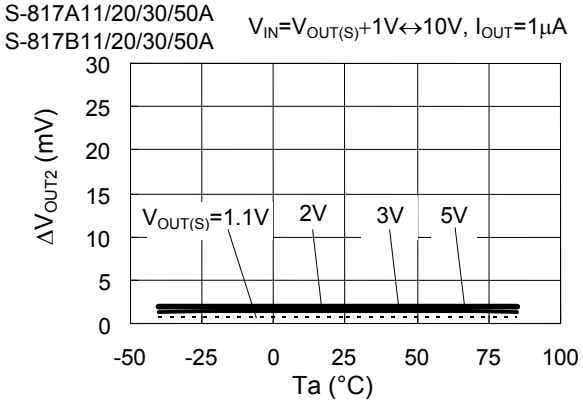

8. Load Regulation vs. Ambient Temperature

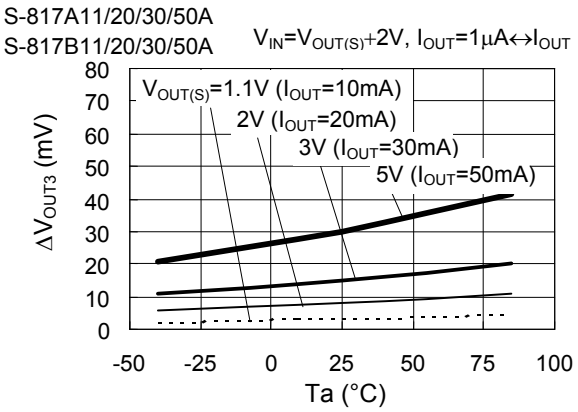

9. Current Consumption vs. Input Voltage

S-817A11A/S-817B11A

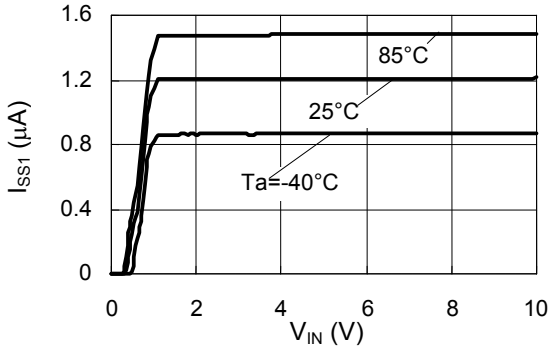

S-817A20A/S-817B20A

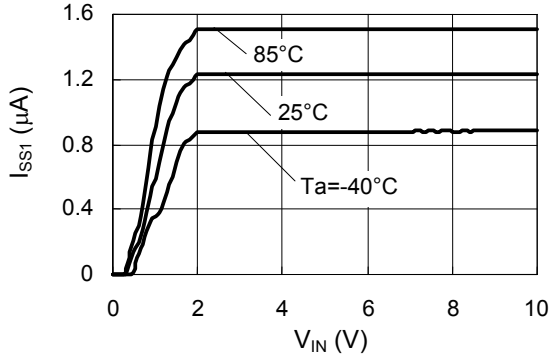

S-817A30A/S-817B30A

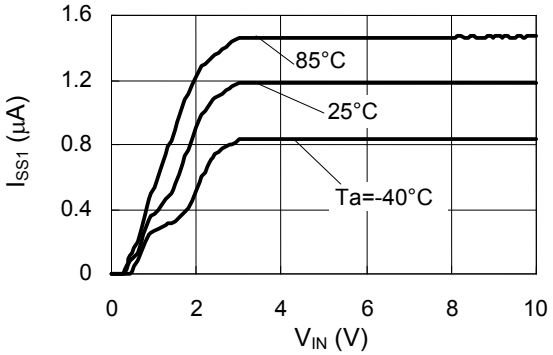

S-817A50A/S-817B50A

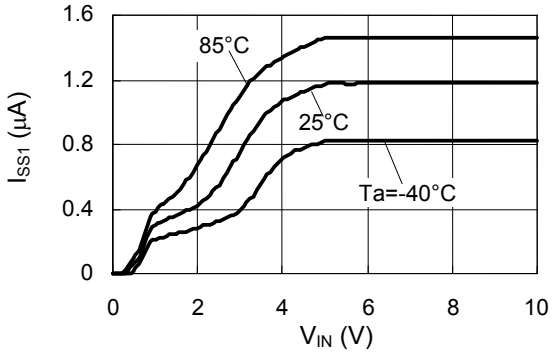

■ Reference Data

1. Transient Response Characteristics (Typical data, Ta=25°C)

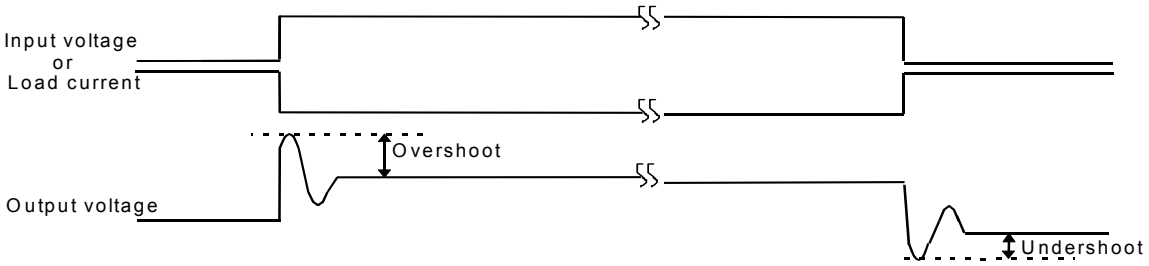

1. 1 At power-on S-817A30A (When using a ceramic capacitor, C_L=1 μF)

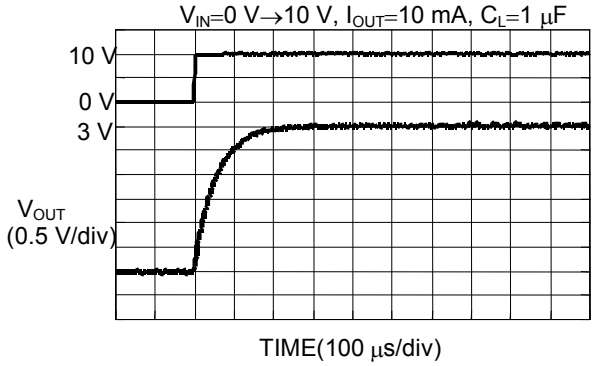

Load dependencies of overshoot at power-on

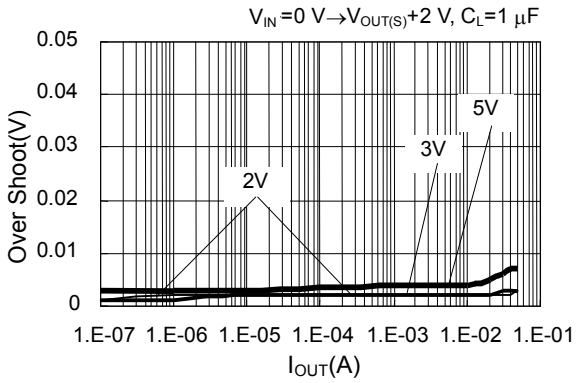

C_L dependencies of overshoot at power-on

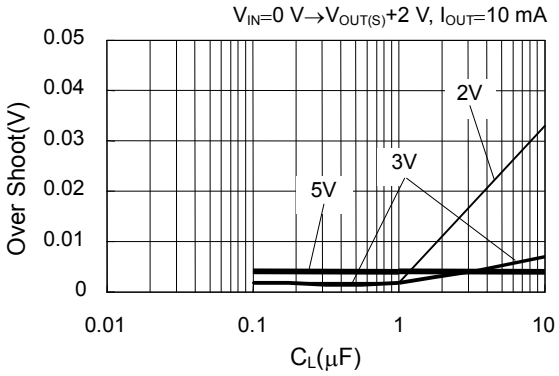

V_{DD} dependencies of overshoot at power-on

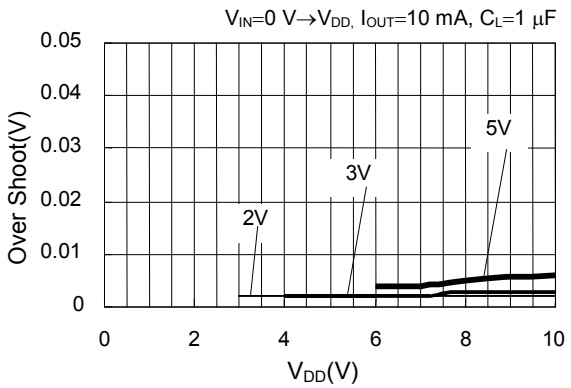

"Ta" dependencies of overshoot at power-on

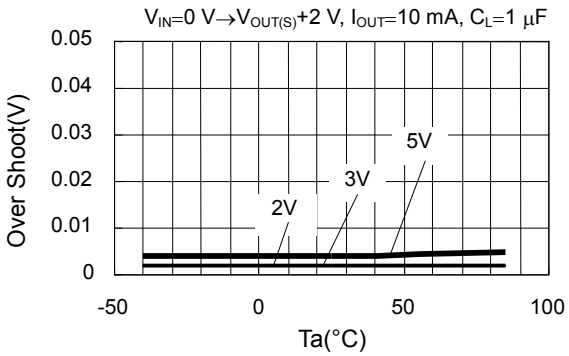

1. 2 At power-on S-817B30A (When using a ceramic capacitor, C_L=1 μF)

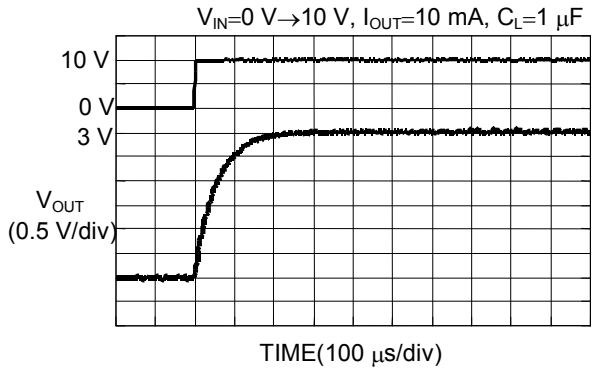

Load dependencies of overshoot at power-on

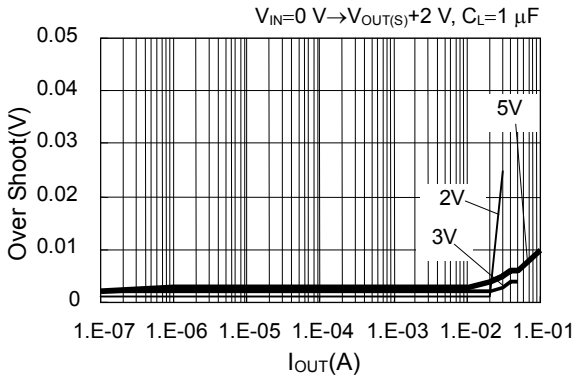

C_L dependencies of overshoot at power-on

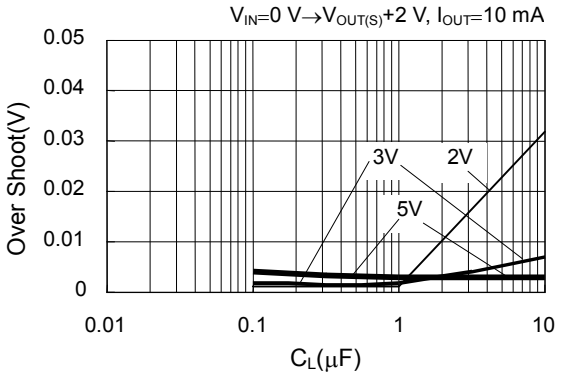

V_{DD} dependencies of overshoot at power-on

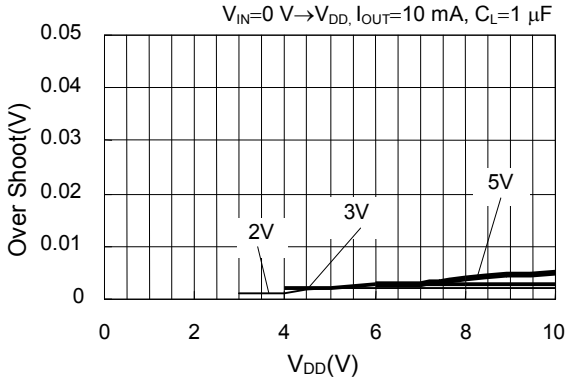

"Ta" dependencies of overshoot at power-on

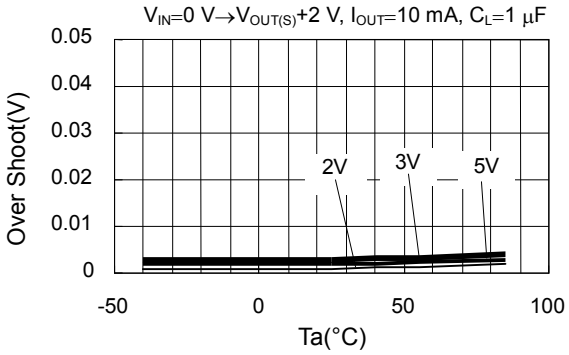

1. 3 At power fluctuation S-817A30A / S-817B30A (When using a ceramic capacitor, C_L=1 μF)

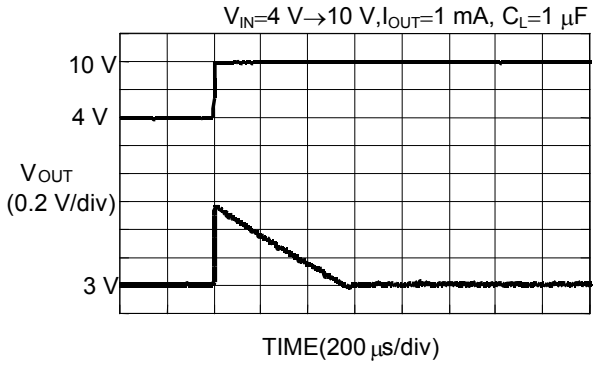

Load dependencies of overshoot at power fluctuation

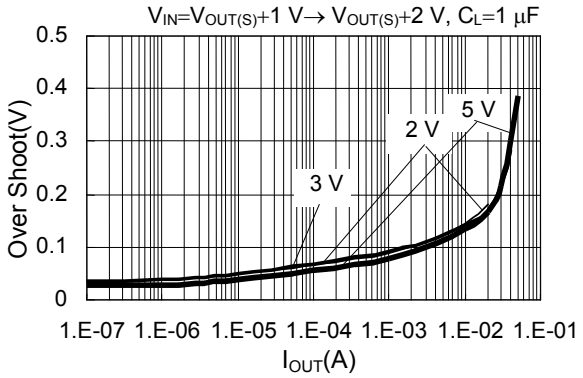

C_L dependencies of overshoot at power fluctuation

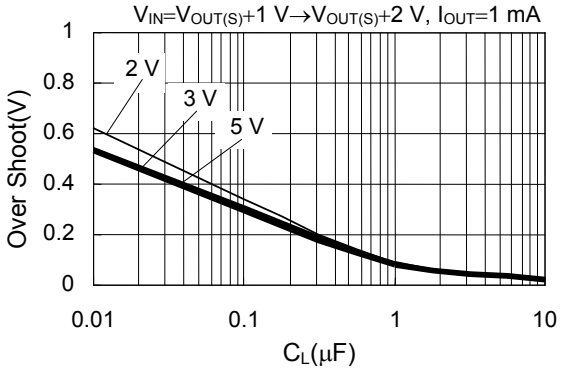

V_{DD} dependencies of overshoot at power fluctuation

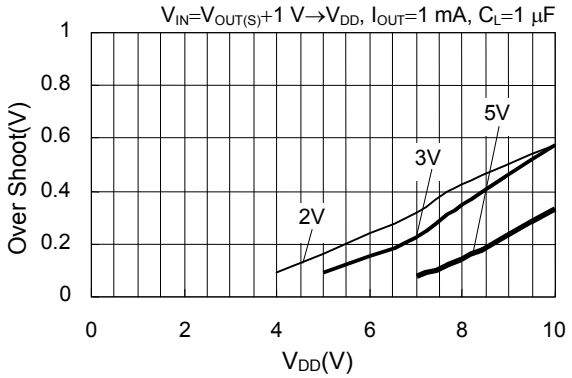

"Ta" dependencies of overshoot at power fluctuation

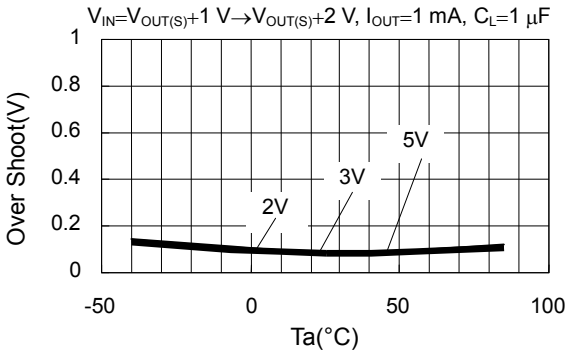

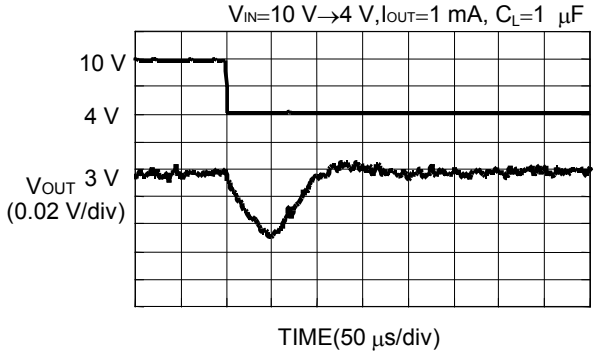

Load dependencies of undershoot at power fluctuation

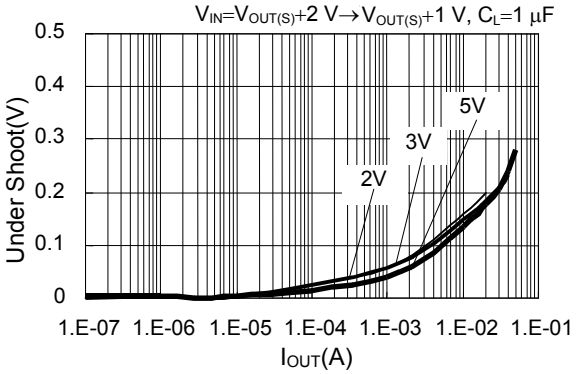

C_L dependencies of undershoot at power fluctuation

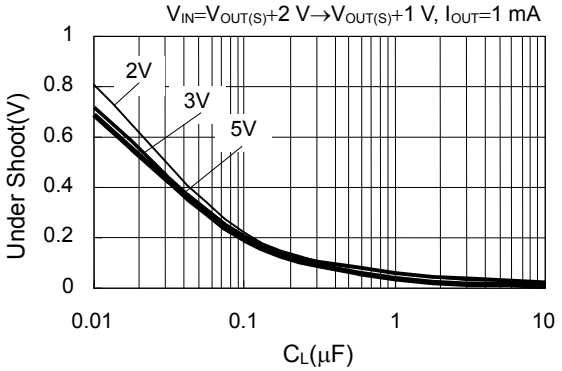

V_{DD} dependencies of undershoot at power fluctuation

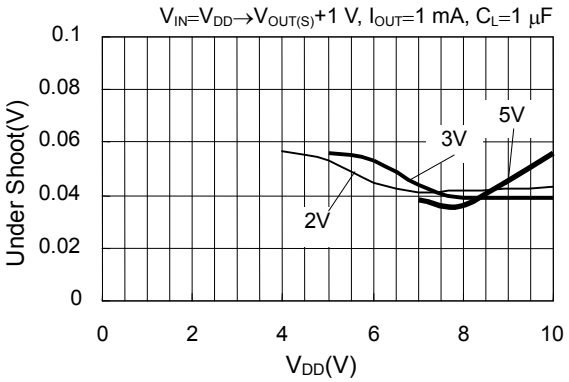

"Ta" dependencies of undershoot at power fluctuation

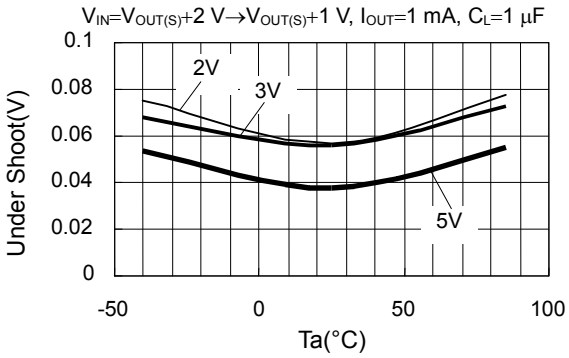

1. 4 At load fluctuation S-817A30A/S-817B30A (When using a ceramic capacitor, C_L=1 μF)

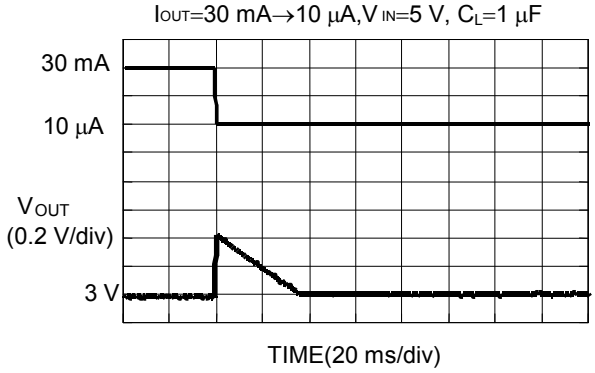

Load current dependencies of overshoot at load fluctuation

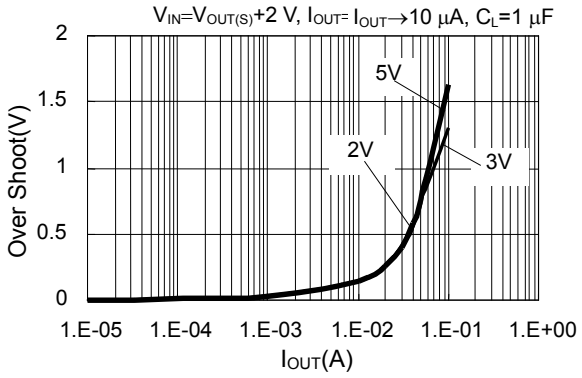

C_L dependencies of overshoot at load fluctuation

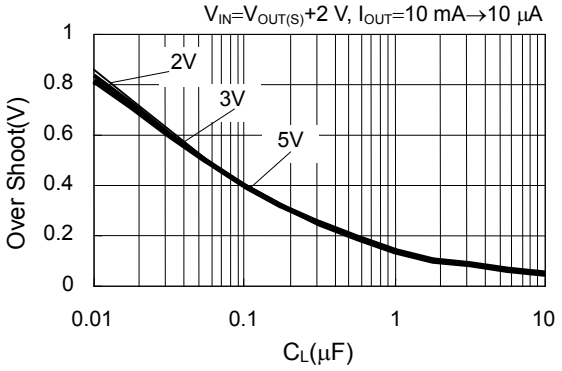

V_{DD} dependencies of overshoot at load fluctuation

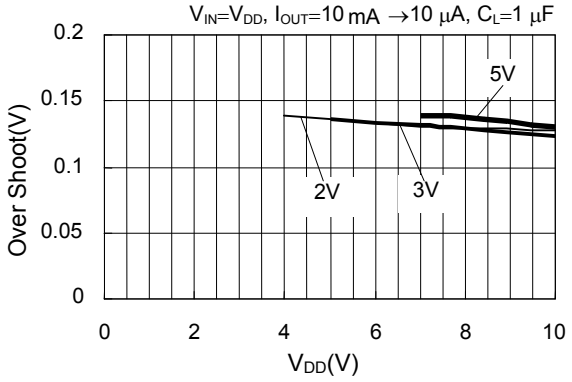

"Ta" dependencies of overshoot at load fluctuation

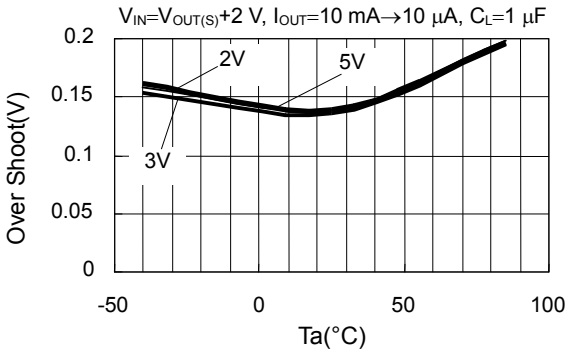

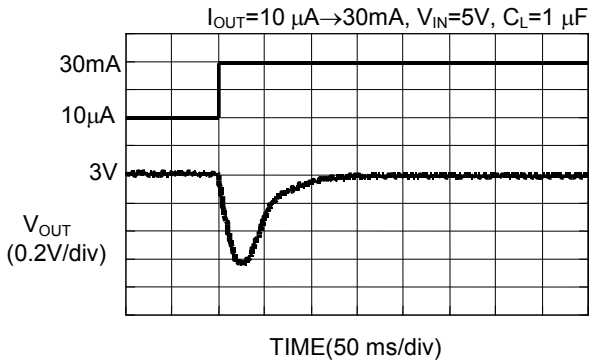

Load current dependencies of undershoot at load fluctuation

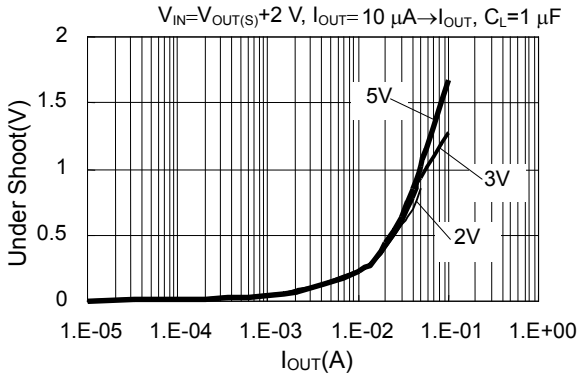

C_L dependencies of undershoot at load fluctuation

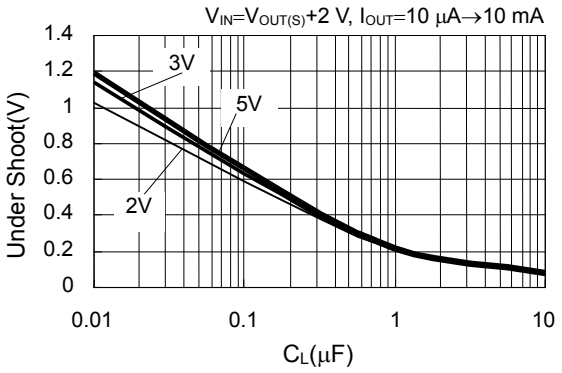

V_{DD} dependencies of undershoot at load fluctuation

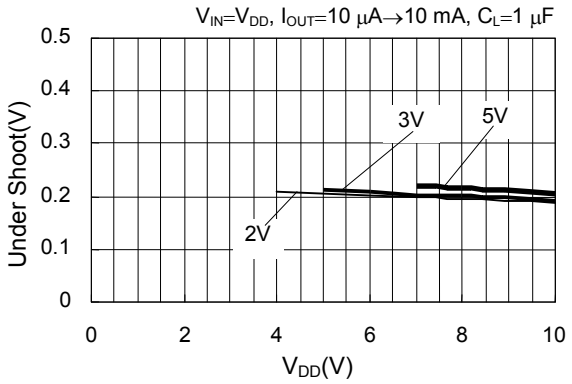

“Ta” dependencies of undershoot at load fluctuation

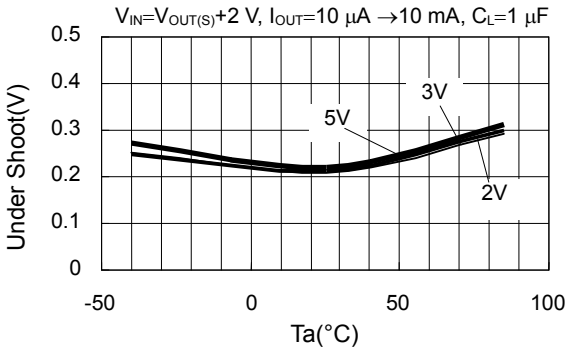

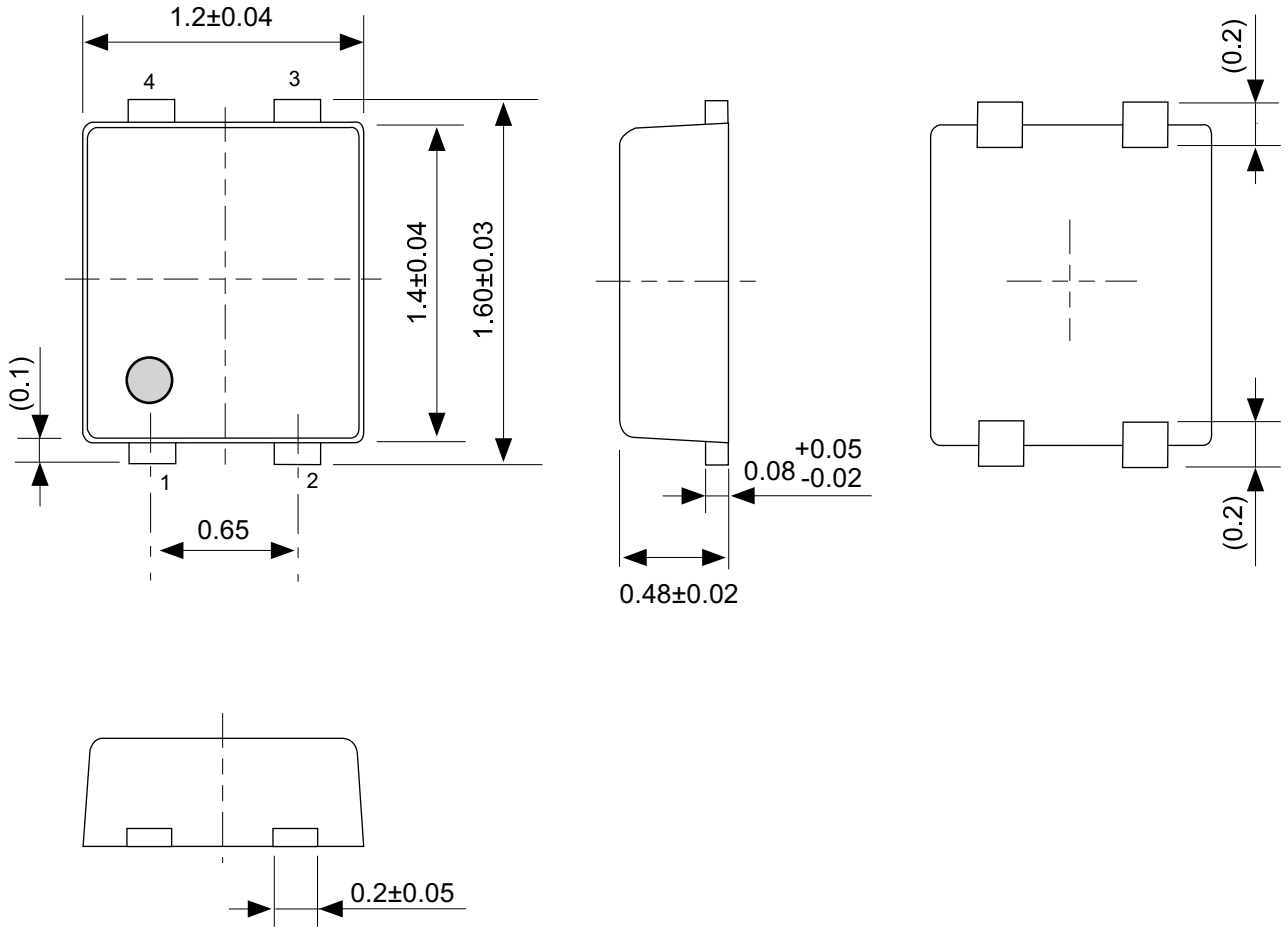

No. PF004-A-P-SD-6.0

TITLE	SNT-4A-A-PKG Dimensions
No.	PF004-A-P-SD-6.0
ANGLE	
UNIT	mm
ABLIC Inc.	

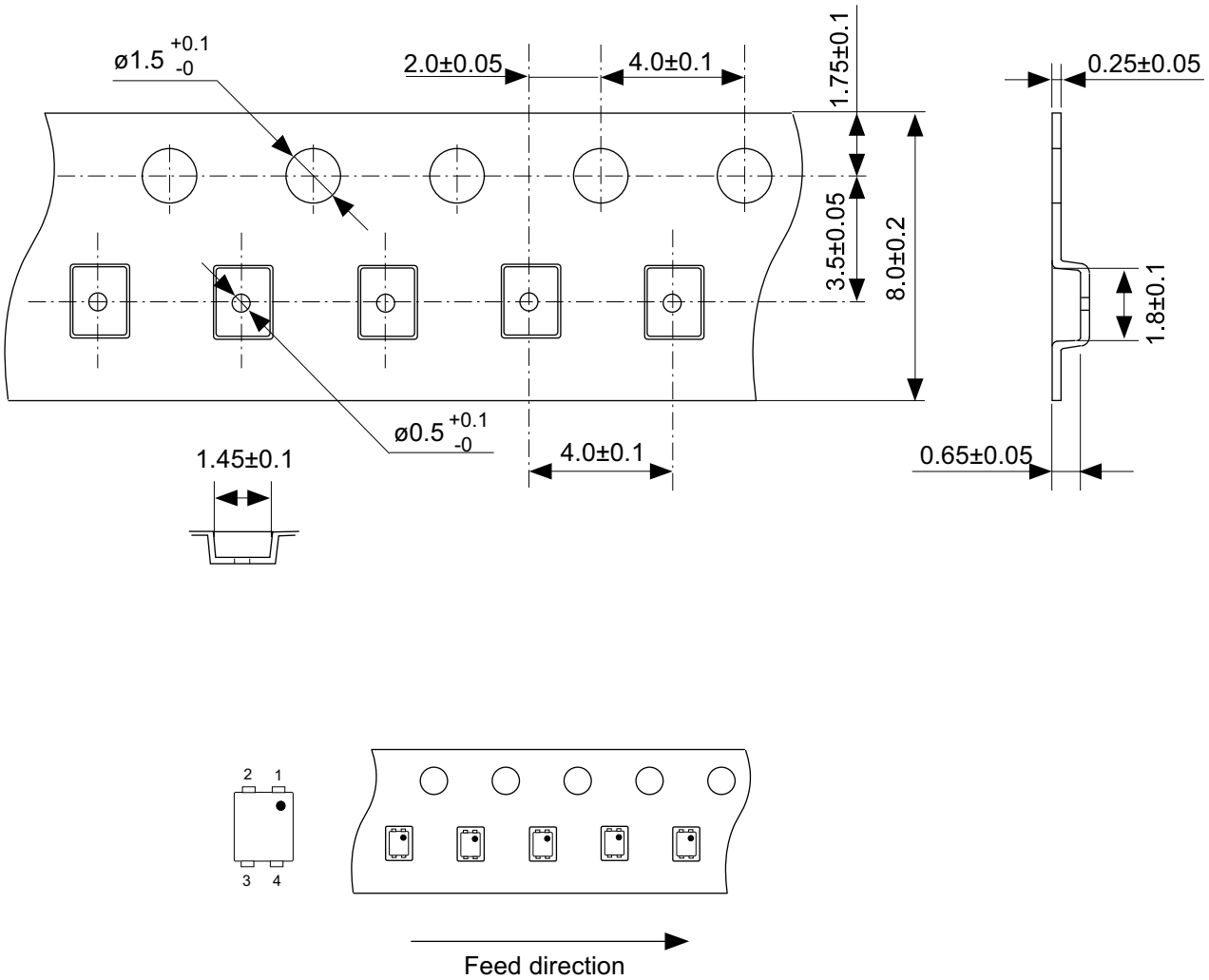

No. PF004-A-C-SD-2.0

TITLE	SNT-4A-A-Carrier Tape
No.	PF004-A-C-SD-2.0
ANGLE	
UNIT	mm

ABLIC Inc.

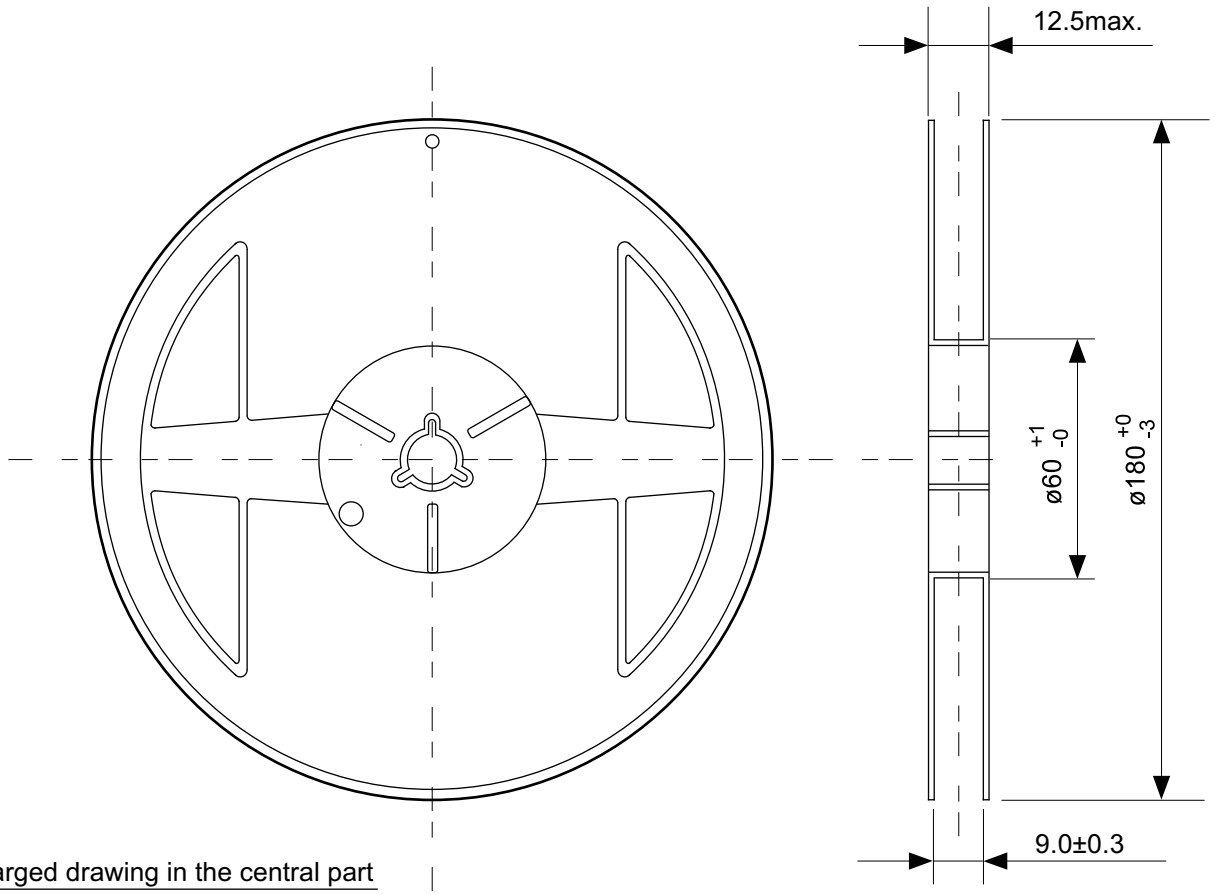

Enlarged drawing in the central part

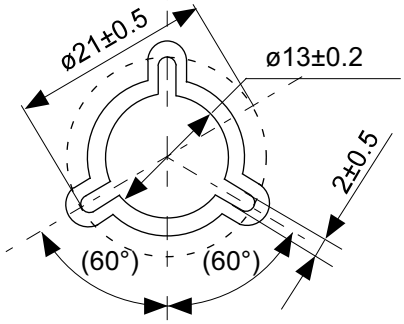

No. PF004-A-R-SD-1.0

TITLE	SNT-4A-A-Reel		
No.	PF004-A-R-SD-1.0		
ANGLE		QTY.	5,000
UNIT	mm		

ABLIC Inc.

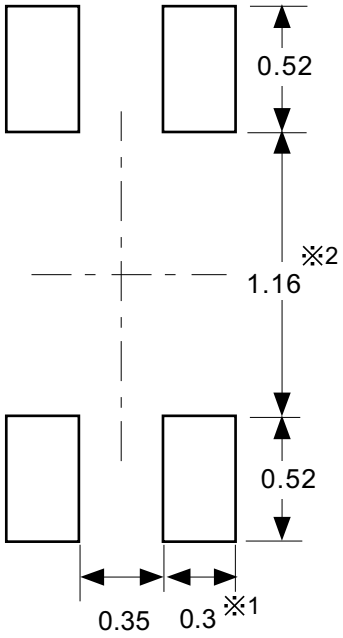

※1. ランドパターンの幅に注意してください (0.25 mm min. / 0.30 mm typ.)。
※2. パッケージ中央にランドパターンを広げないでください (1.10 mm ~ 1.20 mm)。

注意 1. パッケージのモールド樹脂下にシルク印刷やハンダ印刷などしないでください。
2. パッケージ下の配線上のソルダーレジストなどの厚みをランドパターン表面から**0.03 mm** 以下にしてください。
3. マスク開口サイズと開口位置はランドパターンと合わせてください。
4. 詳細は ″SNTパッケージ活用の手引き″ を参照してください。

※1. Pay attention to the land pattern width (0.25 mm min. / 0.30 mm typ.).
※2. Do not widen the land pattern to the center of the package (1.10 mm to 1.20 mm).

Caution 1. Do not do silkscreen printing and solder printing under the mold resin of the package.
2. The thickness of the solder resist on the wire pattern under the package should be 0.03 mm or less from the land pattern surface.
3. Match the mask aperture size and aperture position with the land pattern.
4. Refer to "SNT Package User's Guide" for details.

※1. 请注意焊盘模式的宽度 (0.25 mm min. / 0.30 mm typ.)。
※2. 请勿向封装中间扩展焊盘模式 (1.10 mm ~ 1.20 mm)。

注意 1. 请勿在树脂型封装的下面印刷丝网、焊锡。
2. 在封装下、布线上的阻焊膜厚度 (从焊盘模式表面起) 请控制在 0.03 mm 以下。
3. 钢网的开口尺寸和开口位置请与焊盘模式对齐。
4. 详细内容请参阅 "SNT 封装的应用指南"。

No. PF004-A-L-SD-4.1

TITLE	SNT-4A-A -Land Recommendation
No.	PF004-A-L-SD-4.1
ANGLE	
UNIT	mm

ABLIC Inc.

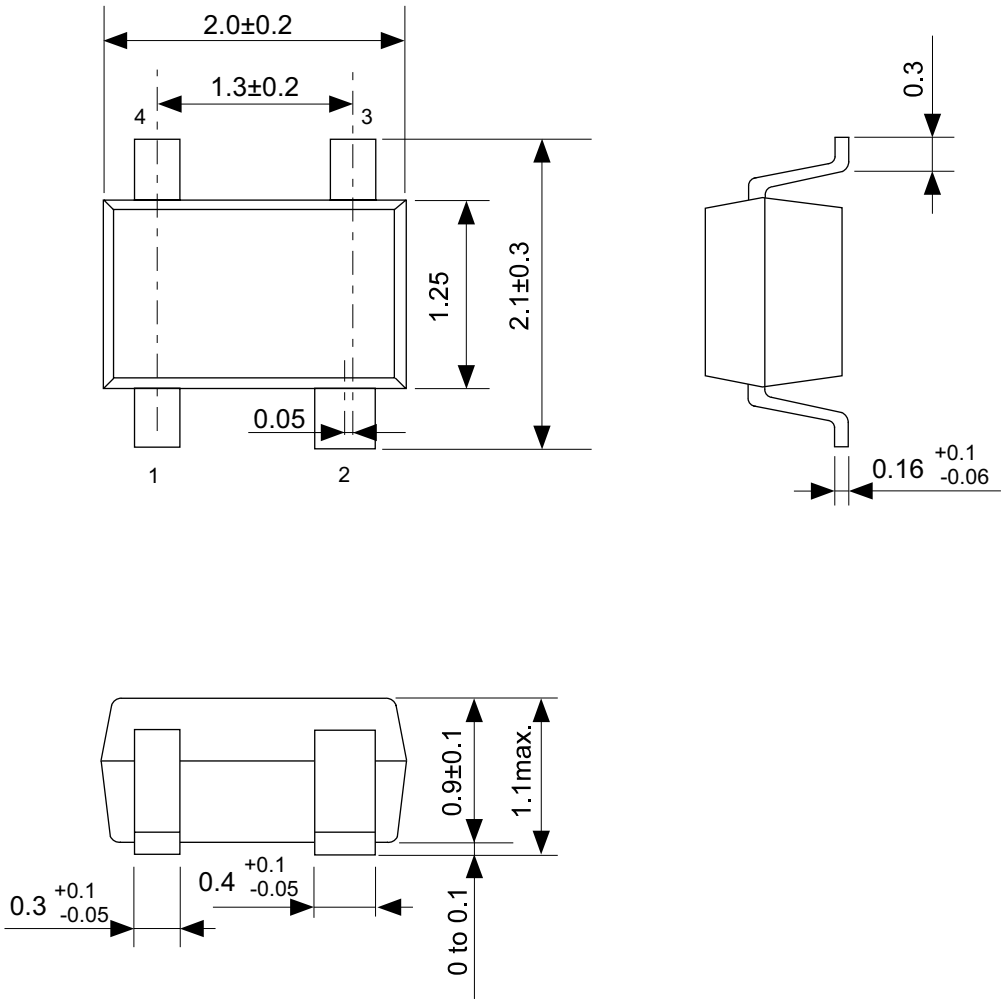

No. NP004-A-P-SD-2.0

TITLE	SC82AB-A-PKG Dimensions
No.	NP004-A-P-SD-2.0
ANGLE	
UNIT	mm
	ABLIC Inc.

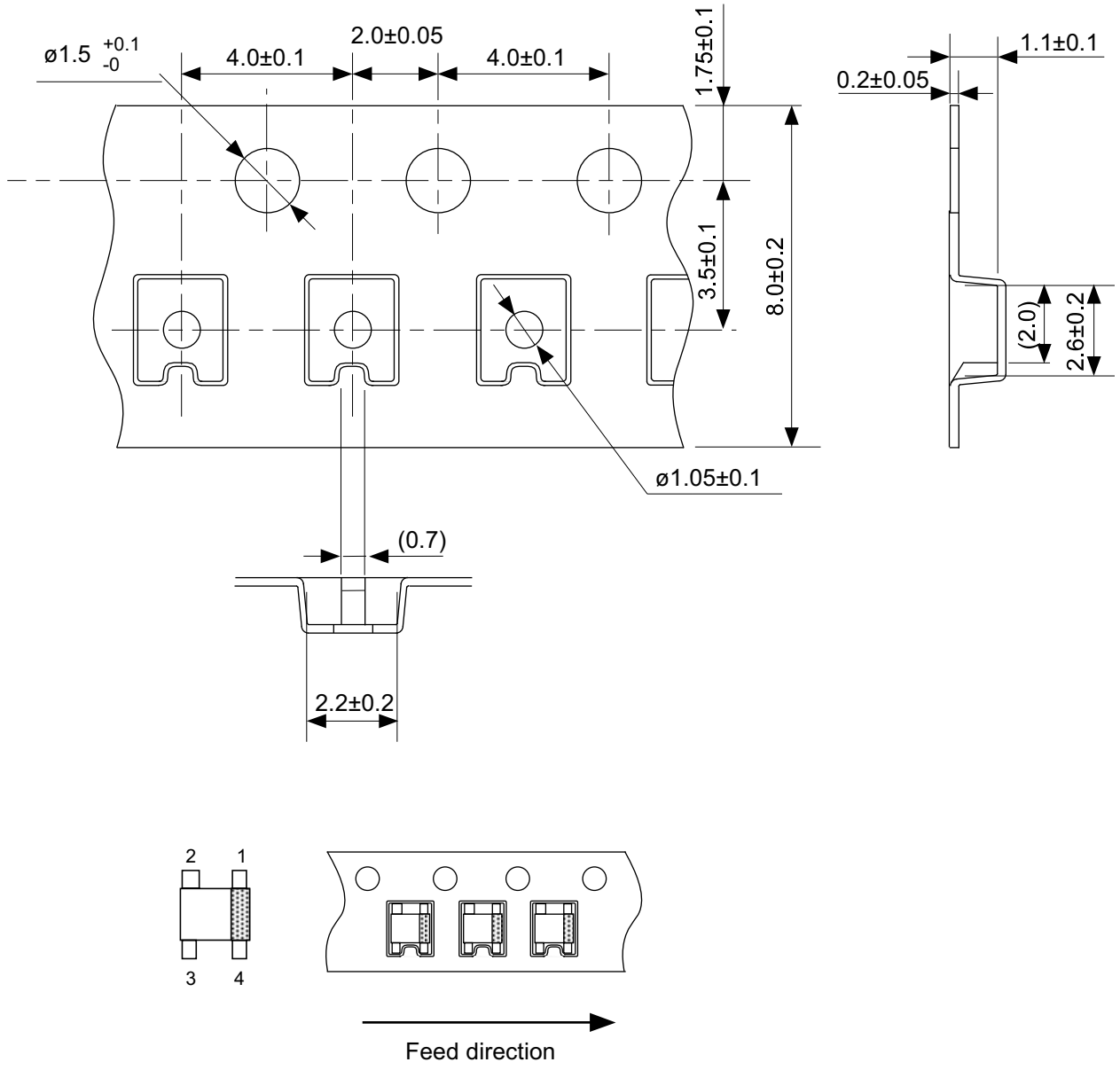

Feed direction

No. NP004-A-C-SD-3.0

TITLE	SC82AB-A-Carrier Tape
No.	NP004-A-C-SD-3.0
ANGLE	
UNIT	mm
	ABLIC Inc.

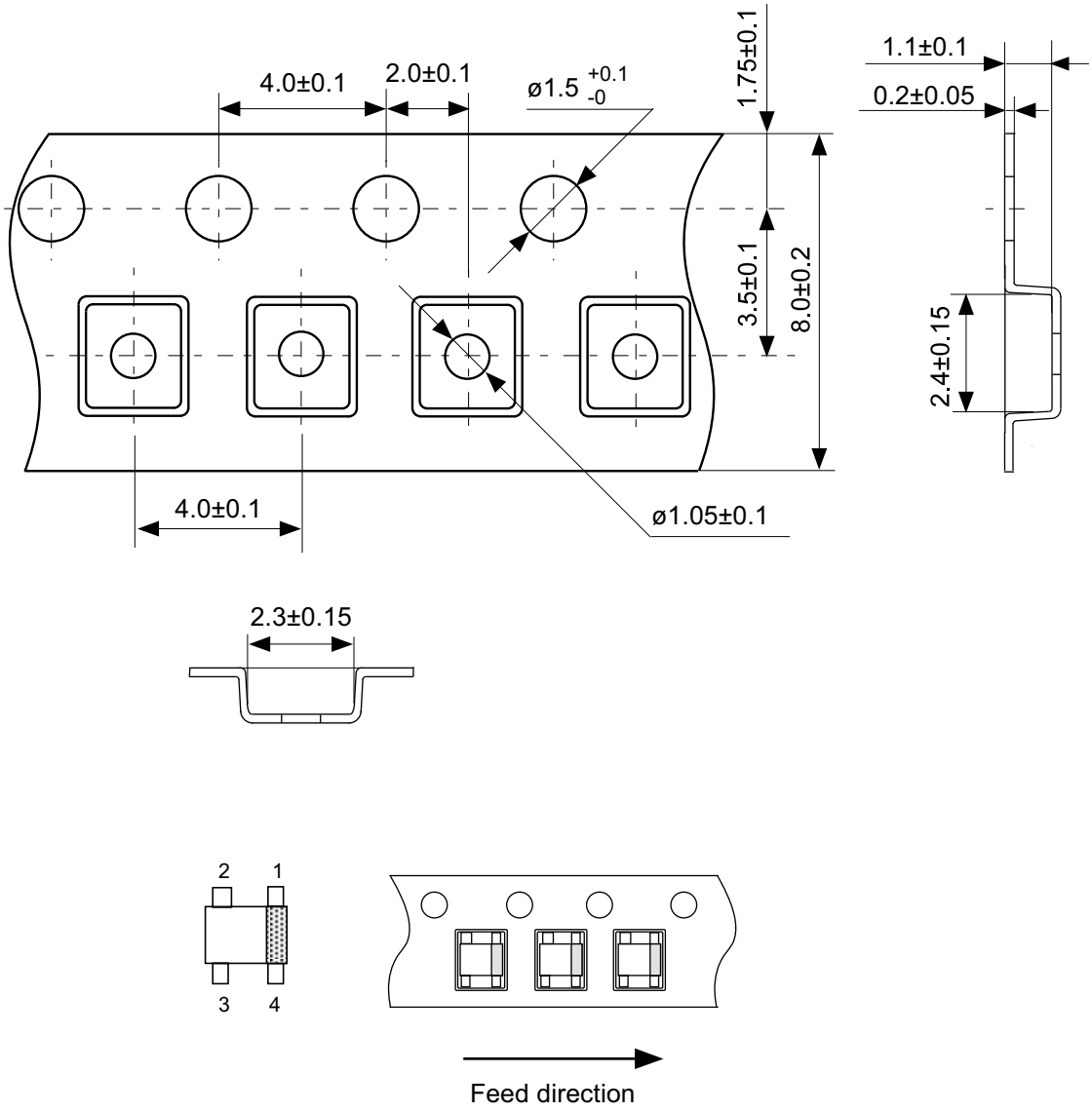

No. NP004-A-C-S1-2.0

TITLE	SC82AB-A-Carrier Tape
No.	NP004-A-C-S1-2.0
ANGLE	
UNIT	mm
	ABLIC Inc.

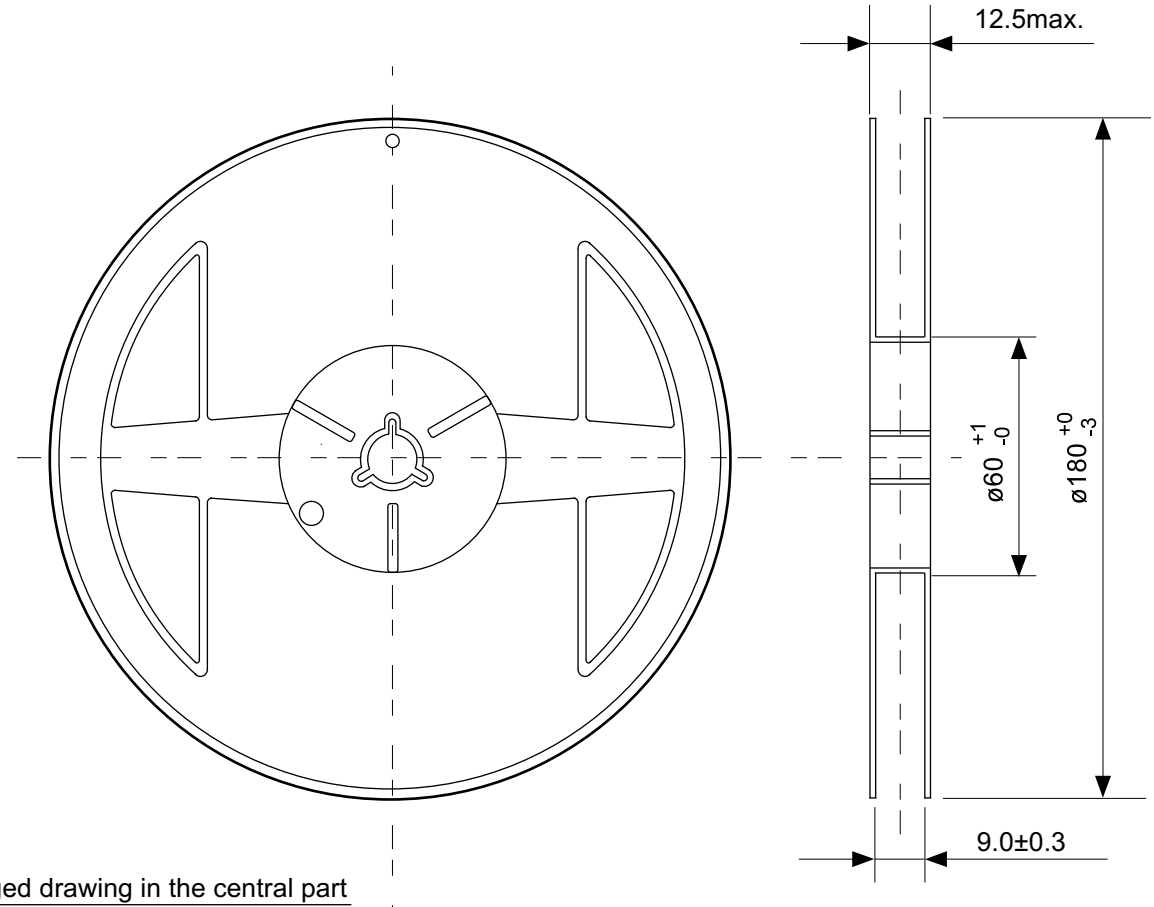

Enlarged drawing in the central part

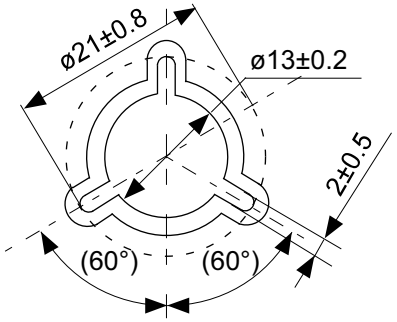

No. NP004-A-R-SD-1.1

TITLE	SC82AB-A-Reel		
No.	NP004-A-R-SD-1.1		
ANGLE		QTY.	3,000
UNIT	mm		
	ABLIC Inc.		

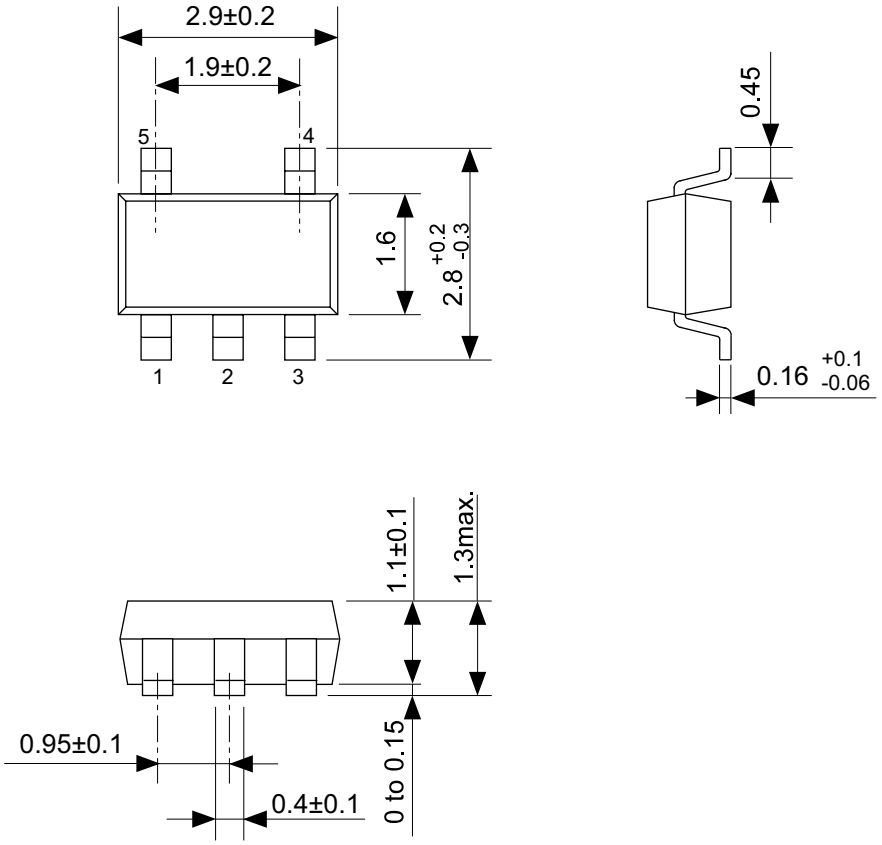

No. MP005-A-P-SD-1.3

TITLE	SOT235-A-PKG Dimensions
No.	MP005-A-P-SD-1.3
ANGLE	
UNIT	mm

ABLIC Inc.

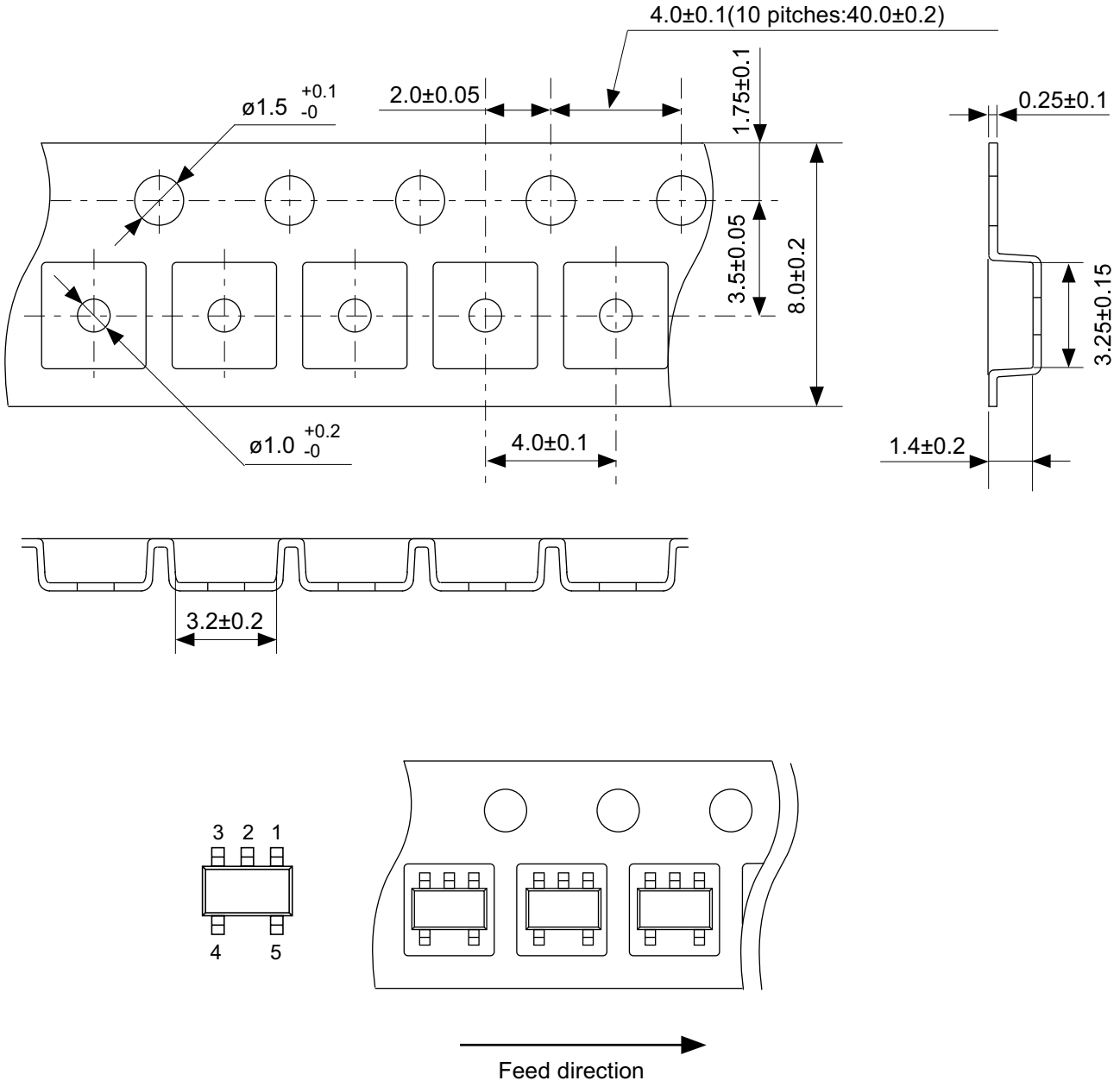

No. MP005-A-C-SD-2.1

TITLE	SOT235-A-Carrier Tape
No.	MP005-A-C-SD-2.1
ANGLE	
UNIT	mm
ABLIC Inc.	

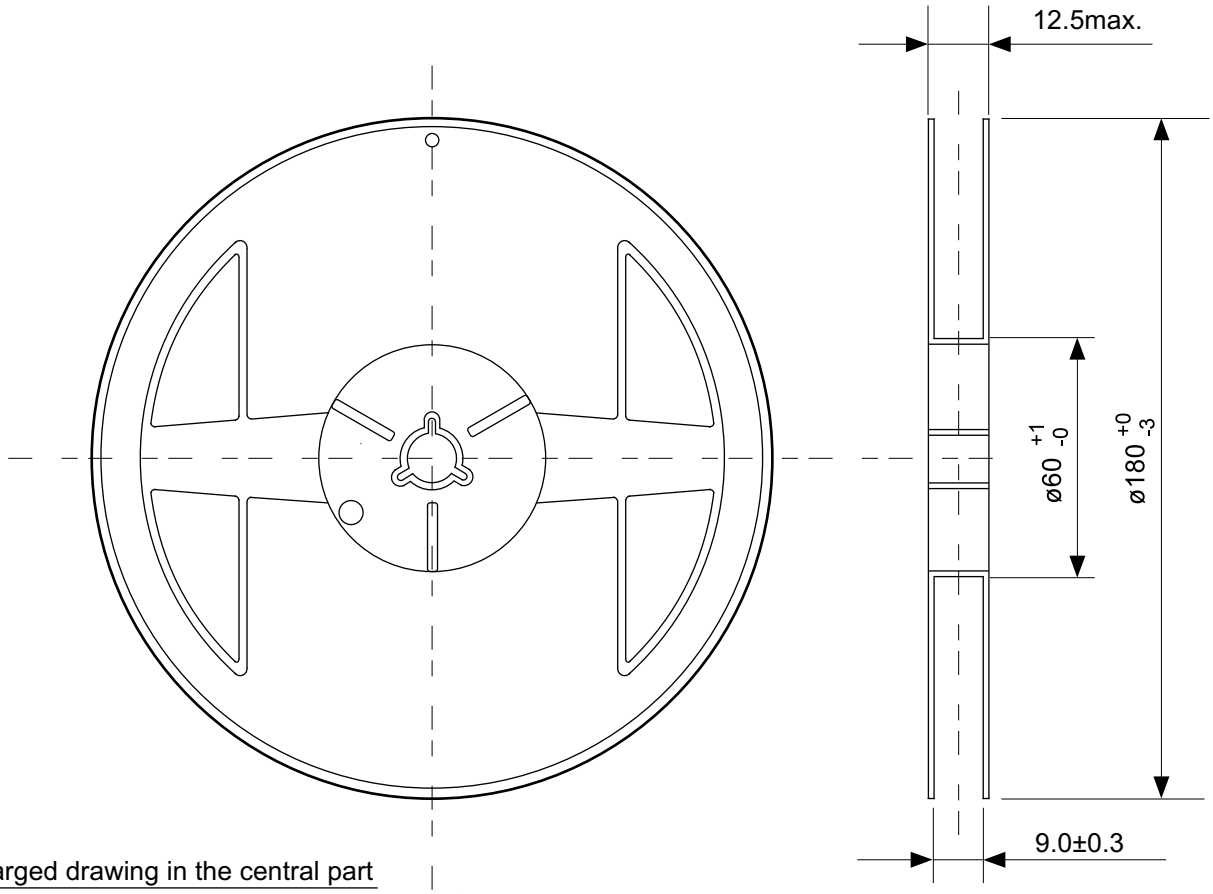

Enlarged drawing in the central part

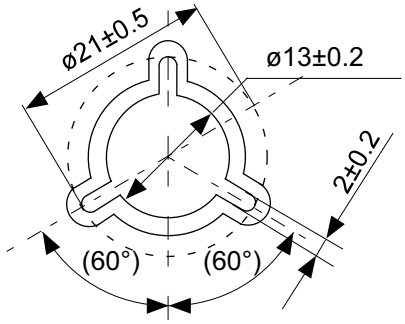

No. MP005-A-R-SD-1.1

TITLE	SOT235-A-Reel		
No.	MP005-A-R-SD-1.1		
ANGLE		QTY.	3,000
UNIT	mm		
ABLIC Inc.			

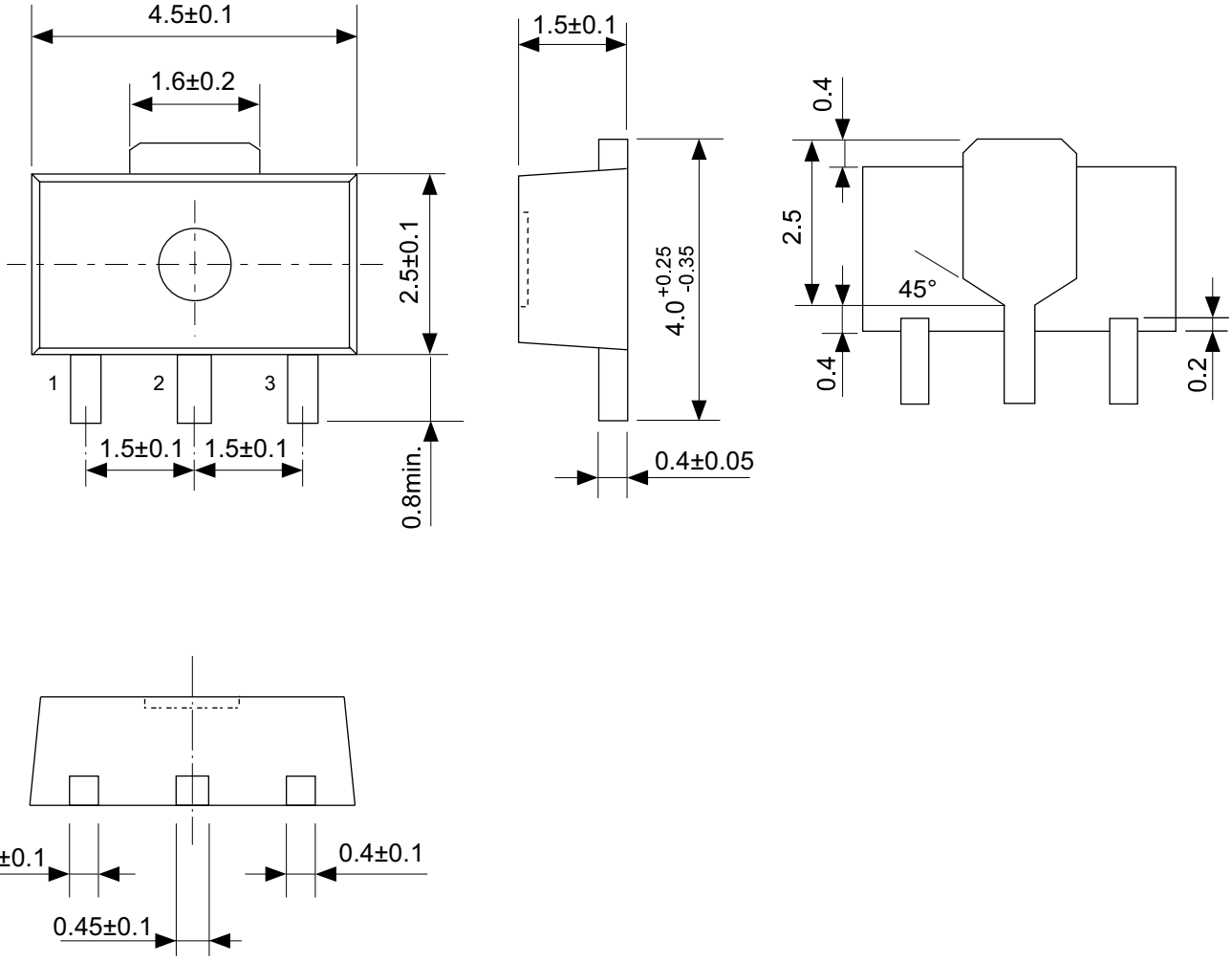

No. UP003-A-P-SD-2.0

TITLE	SOT893-A-PKG Dimensions
No.	UP003-A-P-SD-2.0
ANGLE	
UNIT	mm
	ABLIC Inc.

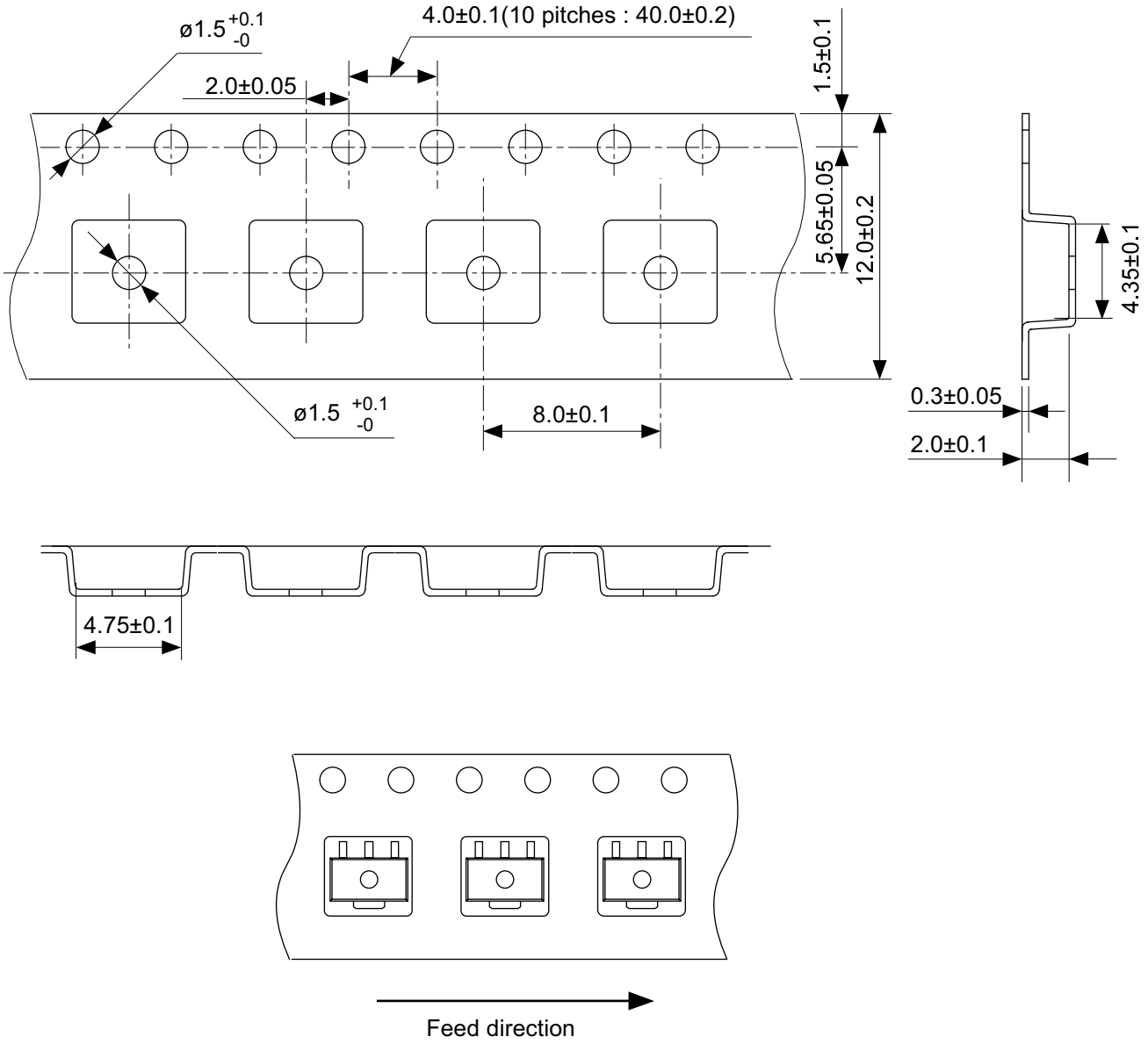

No. UP003-A-C-SD-2.0

TITLE	SOT893-A-Carrier Tape
No.	UP003-A-C-SD-2.0
ANGLE	
UNIT	mm
ABLIC Inc.	

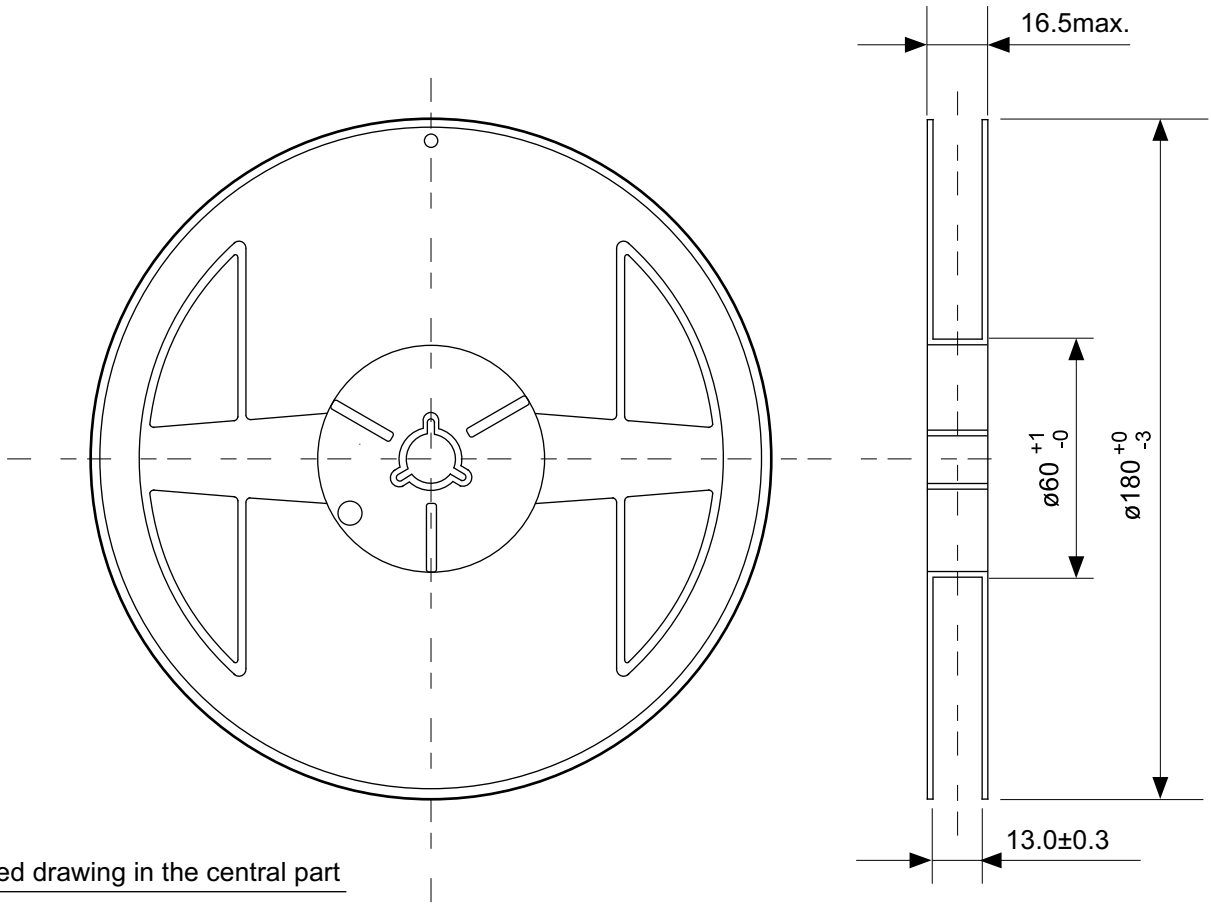

Enlarged drawing in the central part

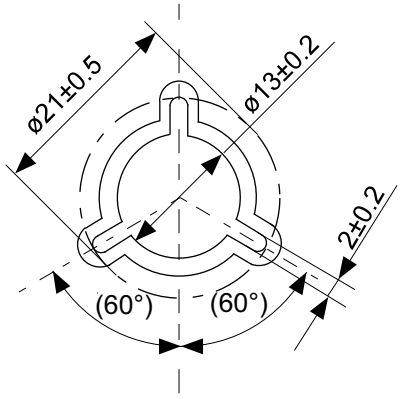

No. UP003-A-R-SD-1.1

TITLE	SOT893-A-Reel		
No.	UP003-A-R-SD-1.1		
ANGLE		QTY.	1,000
UNIT	mm		
ABLIC Inc.			

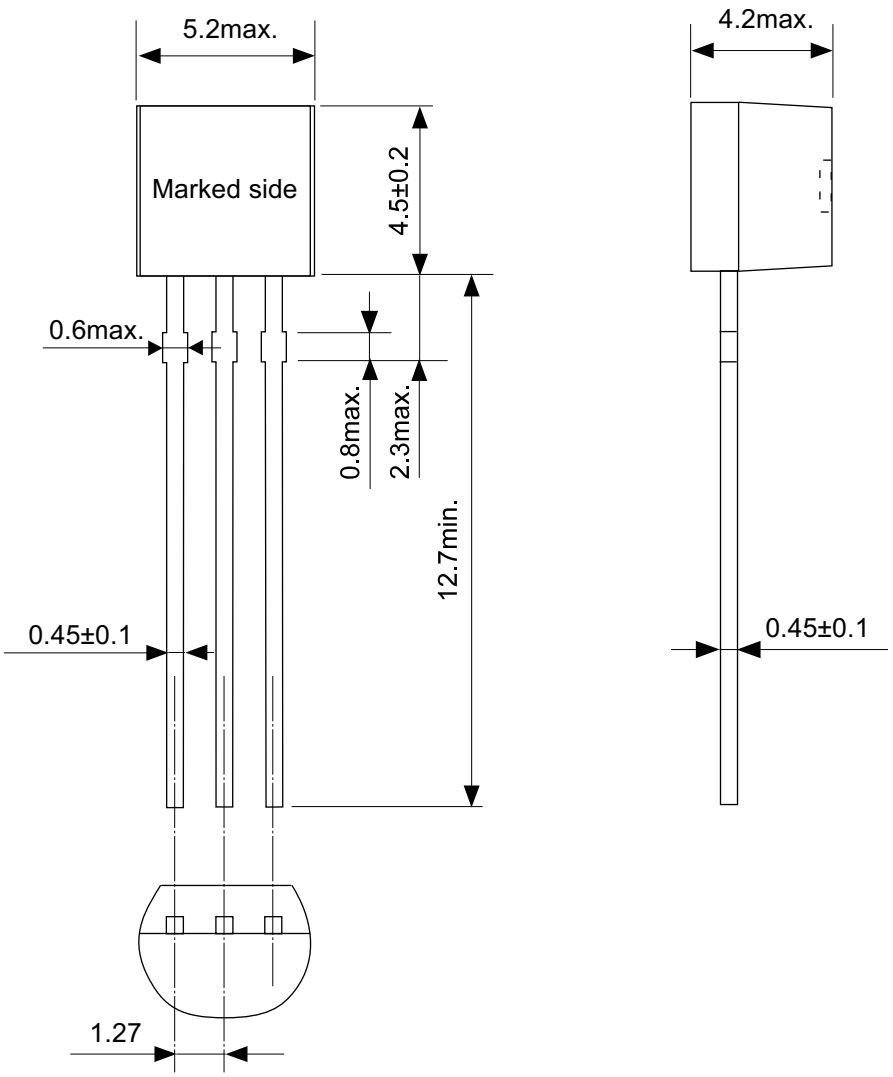

No. YS003-D-P-SD-2.1

TITLE	TO92-D-PKG Dimensions
No.	YS003-D-P-SD-2.1
ANGLE	
UNIT	mm

ABLIC Inc.

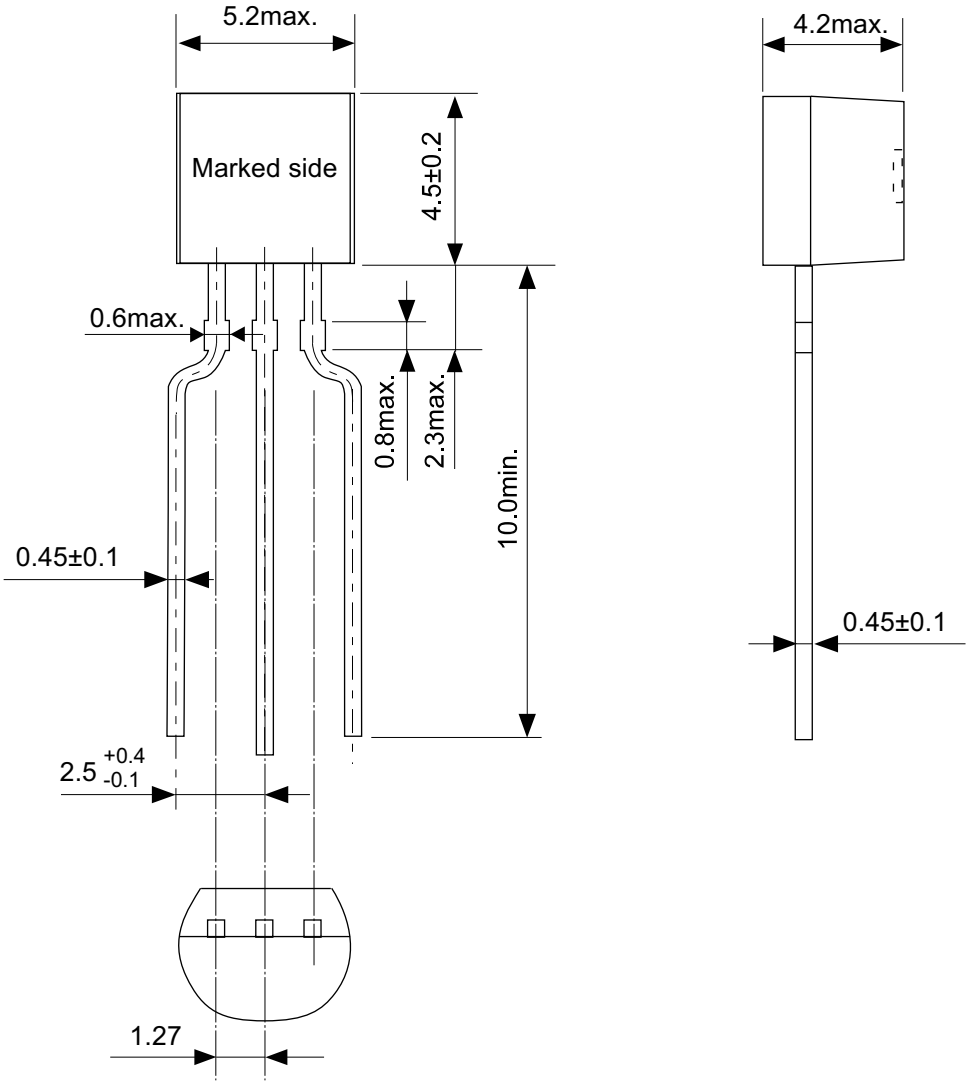

No. YZ003-E-P-SD-2.1

TITLE	TO92-E-PKG Dimensions
No.	YZ003-E-P-SD-2.1
ANGLE	
UNIT	mm

ABLIC Inc.

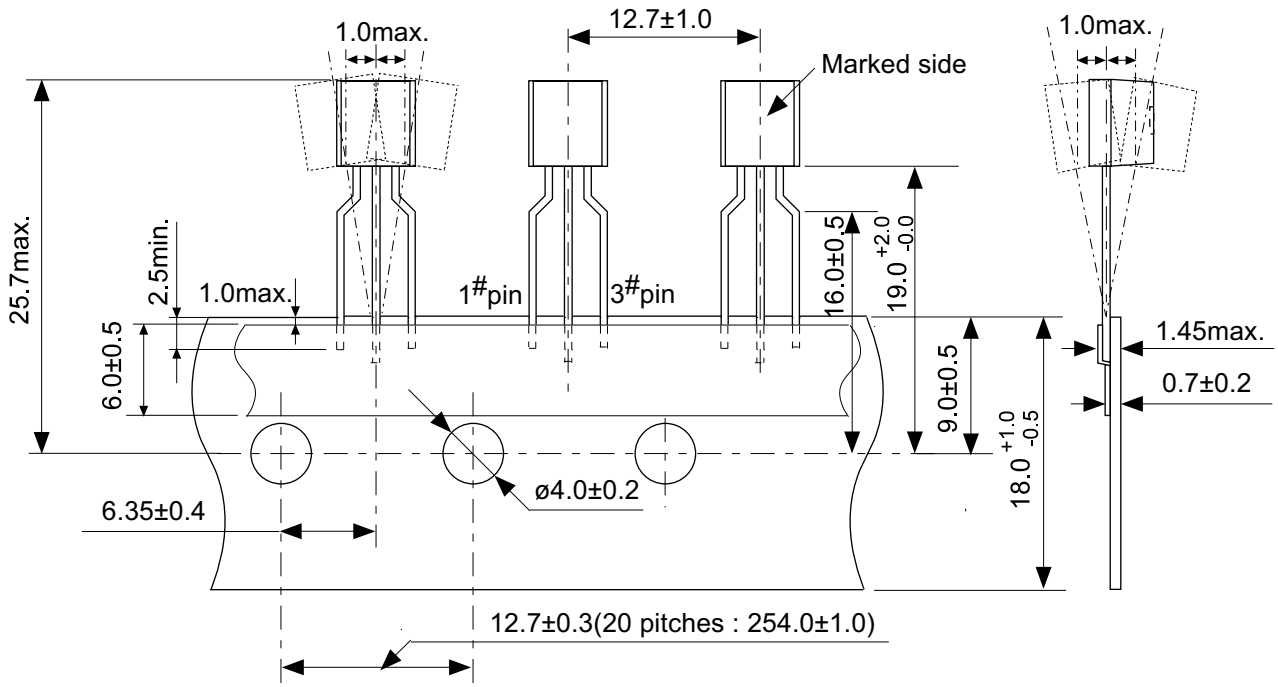

Z type

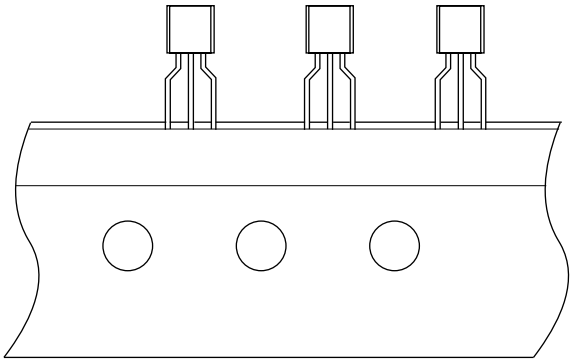

Feed direction

No. YZ003-E-C-SD-1.1

TITLE	TO92-E-Radial Tape
No.	YZ003-E-C-SD-1.1
ANGLE	
UNIT	mm
ABLIC Inc.	

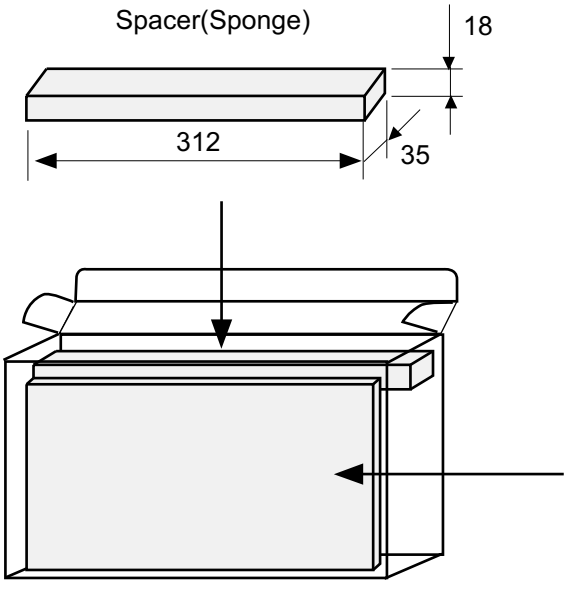

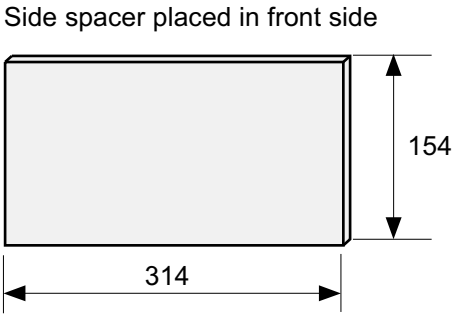

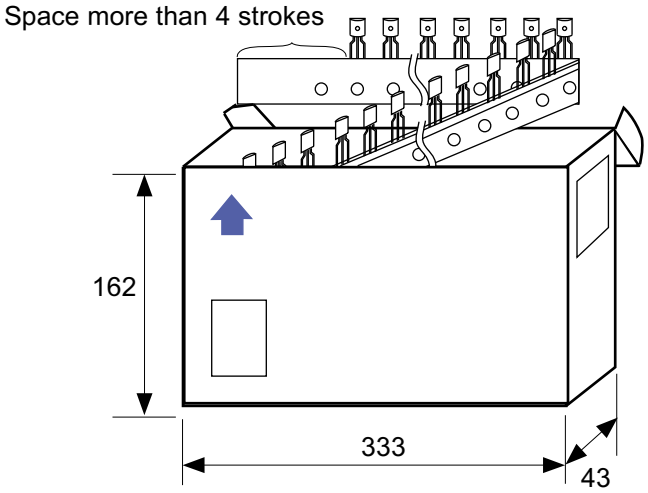

No. YZ003-E-Z-SD-2.0

TITLE	TO92-E-Ammo Packing		
No.	YZ003-E-Z-SD-2.0		
ANGLE		QTY.	2,000
UNIT	mm		
ABLIC Inc.			

Disclaimers (Handling Precautions)

1. All the information described herein (product data, specifications, figures, tables, programs, algorithms and application circuit examples, etc.) is current as of publishing date of this document and is subject to change without notice.
2. The circuit examples and the usages described herein are for reference only, and do not guarantee the success of any specific mass-production design.
   ABLIC Inc. is not liable for any losses, damages, claims or demands caused by the reasons other than the products described herein (hereinafter "the products") or infringement of third-party intellectual property right and any other right due to the use of the information described herein.
3. ABLIC Inc. is not liable for any losses, damages, claims or demands caused by the incorrect information described herein.
4. Be careful to use the products within their ranges described herein. Pay special attention for use to the absolute maximum ratings, operation voltage range and electrical characteristics, etc.
   ABLIC Inc. is not liable for any losses, damages, claims or demands caused by failures and / or accidents, etc. due to the use of the products outside their specified ranges.
5. Before using the products, confirm their applications, and the laws and regulations of the region or country where they are used and verify suitability, safety and other factors for the intended use.
6. When exporting the products, comply with the Foreign Exchange and Foreign Trade Act and all other export-related laws, and follow the required procedures.
7. The products are strictly prohibited from using, providing or exporting for the purposes of the development of weapons of mass destruction or military use. ABLIC Inc. is not liable for any losses, damages, claims or demands caused by any provision or export to the person or entity who intends to develop, manufacture, use or store nuclear, biological or chemical weapons or missiles, or use any other military purposes.
8. The products are not designed to be used as part of any device or equipment that may affect the human body, human life, or assets (such as medical equipment, disaster prevention systems, security systems, combustion control systems, infrastructure control systems, vehicle equipment, traffic systems, in-vehicle equipment, aviation equipment, aerospace equipment, and nuclear-related equipment), excluding when specified for in-vehicle use or other uses by ABLIC, Inc. Do not apply the products to the above listed devices and equipments.
   ABLIC Inc. is not liable for any losses, damages, claims or demands caused by unauthorized or unspecified use of the products.
9. In general, semiconductor products may fail or malfunction with some probability. The user of the products should therefore take responsibility to give thorough consideration to safety design including redundancy, fire spread prevention measures, and malfunction prevention to prevent accidents causing injury or death, fires and social damage, etc. that may ensue from the products' failure or malfunction.
   The entire system in which the products are used must be sufficiently evaluated and judged whether the products are allowed to apply for the system on customer's own responsibility.
10. The products are not designed to be radiation-proof. The necessary radiation measures should be taken in the product design by the customer depending on the intended use.
11. The products do not affect human health under normal use. However, they contain chemical substances and heavy metals and should therefore not be put in the mouth. The fracture surfaces of wafers and chips may be sharp. Be careful when handling these with the bare hands to prevent injuries, etc.
12. When disposing of the products, comply with the laws and ordinances of the country or region where they are used.
13. The information described herein contains copyright information and know-how of ABLIC Inc. The information described herein does not convey any license under any intellectual property rights or any other rights belonging to ABLIC Inc. or a third party. Reproduction or copying of the information from this document or any part of this document described herein for the purpose of disclosing it to a third-party is strictly prohibited without the express permission of ABLIC Inc.
14. For more details on the information described herein or any other questions, please contact ABLIC Inc.'s sales representative.
15. This Disclaimers have been delivered in a text using the Japanese language, which text, despite any translations into the English language and the Chinese language, shall be controlling.

2.4-2019.07

ENTEGRECİ

Bu belge www.entegreci.com üzerinden sunulmaktadır.

Elektronik komponent tedarikinde Entegreci

Entegreci, Eskişehir merkezli, Türkiye geneline satış yapan bir elektronik komponent mağazasıdır. Entegreler (IC), mikrodenetleyiciler, transistörler, diyotlar, pasif elemanlar, konnektörler, modüller ve geliştirme kartları tek adetten seri üretim adetlerine kadar satılır. Ürün sayfalarında güncel stok durumunu, fiyatı ve datasheet bağlantısını bulabilirsiniz.

Parça koduyla arama

Üretici parça numarasını yazın; stok ve fiyatı hemen görün.

www.entegreci.com

Ürün kategorileri

Entegreden kapasitöre tüm elektronik komponent kategorileri.

Kategorilere göz atın

Üreticiler

Aradığınız üreticinin ürünlerini tek sayfada inceleyin.

Üreticileri görün

Toplu alım ve teklif

Listede olmayan ya da yüksek adetli parçalar için teklif isteyin.

Teklif isteyin

www.entegreci.com | **destek@entegreci.com** | **0850 305 90 34**

Entegreci is an online electronic components store based in Türkiye. Search by manufacturer part number to see stock, prices and datasheets for integrated circuits, microcontrollers, transistors, passive components and connectors, or request a quote for parts that are not listed.

Bu sayfa Entegreci tarafından eklenmiştir. Belgenin önceki sayfaları asıl yayıncısına aittir ve içeriği değiştirilmemiştir; en güncel sürüm için belgenin yayıncısına başvurun.