TEA1721AT

HV start-up flyback controller with integrated MOSFET for 5 W applications, 430 Hz burst frequency

Rev. 2.1 — 7 June 2012 Product data sheet

1. Product profile

1.1 General description

The TEA1721 is a small and low cost module Switched Mode Power Supply (SMPS) controller IC for low power applications (up to 5 W) and operates directly from the rectified universal mains input. The device includes a high voltage power switch (700 V) and has been optimized for flyback converter topologies to provide high-efficiency over the entire load range with ultra-low power consumption in the no-load condition. It provides a circuit for start-up directly from the rectified mains voltage without any external bleeder circuits.

The converter operates as a regulated voltage source from no-load up to the maximum output current and operates as current source that delivers the maximum current over a broad output voltage range. Using the TEA1721, a low power converter can be built at minimum cost and with the minimum number of external components.

The controller regulates the output voltage with primary-side sensing which eliminates the need for an additional secondary feedback circuitry and simplifies the design. At higher power levels, a frequency and current control mode is used. It operates with Burst mode control at low power levels and no-load condition. The burst mode minimizes audible noise and provides an energy saver state which reduces the power consumption in no-load condition. The Burst mode frequency of 430 Hz enables no-load power consumption below < 10 mW at high mains input.

1.2 Features and benefits

Power features:

- Low power SMPS controller with integrated power switch designed for applications up to 5 W
- 700 V high voltage power switch for global mains operation
- Primary sensing for control of the output voltage without optocoupler and secondary feedback circuitry
- Minimizes audible noise in all operation modes
- USB battery charging and Energy Star 2.0 compliant
- Jitter function for reduced EMI

Green features:

- Enables no-load power consumption below < 10 mW
- Very low supply current in no-load condition with energy saver mode
- Incorporates a high voltage start-up circuit with zero current consumption under normal switching operation
- Available in halogen-free and Restriction of Hazardous Substances (RoHS) SO7 package

Protective functions:

- OverVoltage Protection (OVP) on Feedback control (FB) pin with auto-restart
- UnderVoltage LockOut (UVLO) protection on IC supply pin
- OverTemperature Protection (OTP)
- Soft-start by reduced peak current for zero and low output voltage
- Demagnetization protection for guaranteed discontinuous conduction mode operation
- Open and short-circuit protection of the Feedback control (FB) pin
- Short-circuit protection of the charger output

1.3 Applications

- Battery chargers for cellular phones and other low power adapters up to 5 W
- Standby supply for TV and desktop PC
- Power supply for white goods applications

1.4 Quick reference data

Table 1. Quick reference data

Symbol	Parameter	Conditions	Min	Typ	Max	Unit
Power switch (Pin: DRAIN)						
R_{DSon}	drain-source on-state resistance	I_{ds} = 30 mA; T_j = 25 °C	13	15.5	17	Ω
Oscillator (Pins: DRAIN and SOURCE)						
f_{burst}	burst frequency	burst frequency in CVB mode, without jitter	390	430	470	Hz
$f_{osc-high}$	oscillator frequency High	maximum switching frequency in CV and CC mode, without jitter	48	50.5	53	kHz
Supply (Pin: VCC)						
$V_{CC(startup)}$	start-up supply voltage		15	17	19	V
$V_{CC(stop)}$	stop supply voltage	undervoltage lockout of IC	7.5	8.5	9.5	V

All information provided in this document is subject to legal disclaimers.

© NXP B.V. 2012. All rights reserved.

2. Ordering information

Table 2. Ordering information

Type number	Package		
	Name	Description	Version
TEA1721AT/N1	SO7	plastic small outline package; 7 leads; body width 3.9 mm	SOT1175-1

3. Block diagram

3.1 Block diagram

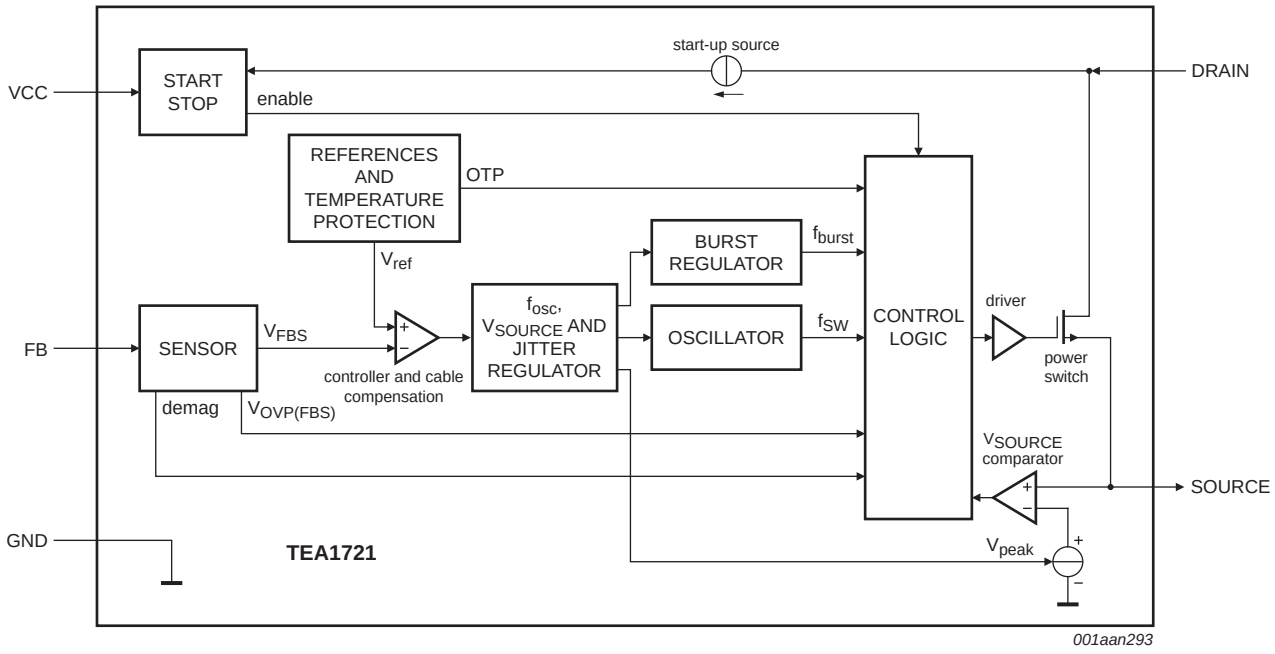

Fig 1. Block diagram

All information provided in this document is subject to legal disclaimers.

© NXP B.V. 2012. All rights reserved.

4. Pinning information

4.1 Pinning

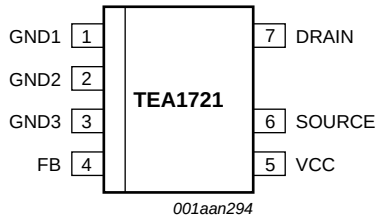

Fig 2. Pinning top view

4.2 Pin description

Pin	Pin name	I/O type	Pin description
1	GND1		ground
2	GND2		ground
3	GND3		ground
4	FB	I	feedback input for voltage sensing
5	VCC	I	supply input
6	SOURCE	O	source for power switch
7	DRAIN	I	drain of power switch
-	-		high voltage spacer

5. Functional description

5.1 Start-up

The TEA1721 starts up by charging the VCC capacitor until the $V_{CC(start)}$ level. The charging current flows from the high voltage DRAIN pin via an internal start-up current source to the VCC pin.

Once the start level has been reached the start-up current source is switched off. During switching operation, the start-up current source remains current-less and has zero bleeder loss.

5.2 Primary sensing

The FB input senses the reflected secondary voltage on the primary side. The FB input has a sample and hold function that samples the FB voltage on the secondary stroke to control the output voltage.

The sampled V_{FBS} voltage is the input for the TEA1721's control loop and defines the operating mode.

All information provided in this document is subject to legal disclaimers.

© NXP B.V. 2012. All rights reserved.

5.3 Operating modes

The TEA1721 operates in three modes, one of which is active at the time. The three modes in order of decreasing load impedance are:

- CVB: Constant Voltage with Burst mode
- CV: Constant Voltage mode
- CC: Constant Current mode

The converter acts as a voltage source in CVB and CV modes.

The converter acts as a current source in CC mode.

5.3.1 Constant Voltage with Burst mode (CVB)

At low power, the TEA1721 operates in Burst mode.

Burst mode operates with a V_{SOURCE} = 100 mV, a switching frequency of 22.5 kHz and burst duty-cycle regulation by sensing the FB voltage.

The TEA1721 features an energy save function that puts the main part of the analogue blocks in a sleep mode with low supply current in burst mode. The burst mode enables the energy save mode in the non-switching part of the burst. The IC switches to the nominal supply just before new burst starts.

Transition from burst mode to CV mode happens at 100 % burst duty cycle: a burst completely filled with 32 pulses. This 100 % pulse train is identical to the lowest power level of the CV mode. The TEA1721 changes directly from burst mode to CV mode if the FB voltage drops below 2.4 V in burst mode.

5.3.2 Constant Voltage mode (CV)

At higher power levels, the TEA1721 operates in CV mode. The output voltage is sensed by the FB pin and the control keeps the output voltage constant over the power range.

CV mode starts at 22.5 kHz switching frequency and I_{SOURCE} regulation at the V_{SOURCE} minimum level of 100 mV.

With an increasing power output, the V_{SOURCE} level and the switching frequency are also increased.

CV mode is exited when the maximum power level is reached. Maximum power occurs at I_{SOURCE} regulation at the V_{SOURCE} maximum level of 555 mV and a maximum switching frequency of 50.5 kHz.

All information provided in this document is subject to legal disclaimers.

© NXP B.V. 2012. All rights reserved.

5.3.3 Constant Current mode (CC)

The CC mode starts at maximum power delivery and keeps the output current constant for decreasing output voltage.

CC mode is enabled when the converter is operating at the maximum switching frequency, with the maximum primary peak current when the FB voltage drops below the regulated level.

CC mode operation controlled is by regulation of the switching frequency from 50.5 kHz down to 22.5 kHz and by I_{SOURCE} regulation from the maximum V_{SOURCE} level of 555 mV until level of V_{SOURCE} is 0.21 V. The V_{SOURCE} level of 0.21 V equals the level at start-up with zero output voltage and the output capacitor discharged or on a short-circuit of the charger output.

5.4 Jitter

The TEA1721 features a jitter function for ElectroMagnetic Interference (EMI) reduction. The switching frequency is 7 % typical for the spread spectrum. The sweep frequency is a low frequency of approximately 200 Hz. To keep the output power constant, the V_{SOURCE} level is jittered with the opposite polarity. The jitter is active in all operation modes except burst mode.

All information provided in this document is subject to legal disclaimers.

© NXP B.V. 2012. All rights reserved.

6. Limiting values

Table 3. Limiting values

In accordance with the Absolute Maximum Rating System (IEC 60134).

Symbol	Parameter	Conditions		Min	Max	Unit
T_{amb}	ambient temperature			-40	+85	°C
T_j	junction temperature			-40	+150	°C
T_{stg}	storage temperature			-55	+150	°C
V_{ESD}	electrostatic discharge voltage	CDM; all pins		-500	+500	V
		HBM; all pins, except pin 7	[1]	-2000	+2000	V
		HBM; pin 7	[1]	-1000	+1000	V
Voltages						
V_{DRAIN}	voltage on pin DRAIN			-2	+700	V
V_{SOURCE}	voltage on pin SOURCE			-0.3	+5	V
V_{CC}	voltage on pin VCC			-0.3	+35	V
V_{FB}	voltage on pin FB			-20	+5	V
Currents						
I_{DRAIN}	current on pin DRAIN			-0.1	+0.7	A
I_{SOURCE}	current on pin SOURCE			-0.7	+0.1	A

[1] Human body model: equivalent to discharging a 100 pF capacitor through a 1.5 kΩ series resistor.

7. Thermal characteristics

Table 4. Thermal characteristics

Symbol	Parameter	Conditions	Min	Typ	Max	Unit
$R_{th(j-a)}$	thermal resistance from junction to ambient	in free air; SO7 package; on open PCB of 2.2 cm X 2.2 cm; 2-layer; 70 µm Cu	-	136	-	K/W
		in free air; SO7 package; on open PCB of 3 cm X 6 cm; 1-layer; 35 µm Cu	-	136	-	K/W

All information provided in this document is subject to legal disclaimers.

© NXP B.V. 2012. All rights reserved.

8. Characteristics

Table 5. Characteristics

V_{CC} = 20 V; V_{FB} = 0 V; R_{source} = 1.5 Ω; $T_{j\text{-}switch}$ = 25 °C; $T_{j\text{-}controller}$ = 25 °C; all voltages referenced to GND, positive currents flow into the IC, unless otherwise specified.

Symbol	Parameter	Conditions	Min	Typ	Max	Unit
Supply (Pin: VCC)						
$I_{CC(startup)0V}$	start-up supply current	V_{CC} = 0 V	-1.6	-1.2	-0.8	mA
$I_{CC(startup)17V}$	start-up supply current	V_{CC} = $V_{CC(startup)}$	-1.6	-0.7	-0.2	mA
$I_{CC(energysave)}$	supply current in energy save	V_{FB} = 2.8 V, non-switching	90	130	170	µA
$I_{CC(50kHz)}$	supply current at 50 kHz	in CC mode	530	750	970	µA
$V_{CC(startup)}$	start-up supply voltage		15	17	19	V
$V_{CC(stop)}$	stop supply voltage	undervoltage lockout of IC	7.5	8.5	9.5	V
T_{otp}	overtemperature protection threshold temperature on controller die		140	150	160	°C
$T_{otp(hys)}$	overtemperature protection temperature hysteresis		-	50	-	°C
Feedback (Pin: FB)						
$V_{th(ovp)fbck}$	feedback overvoltage protection threshold voltage		3.1	3.2	3.3	V
$V_{ref(fbck)}$	feedback reference voltage	in CV ode	2.5	2.55	2.6	V
$V_{th(fbck)CV}$	constant voltage mode feedback threshold voltage	in burst mode operation	2.35	2.4	2.45	V
$V_{th(det)demag(fb)}$	demagnetization detection voltage level on FB pin		25	50	75	mV
Oscillator (Pins: DRAIN and SOURCE)						
f_{burst}	burst frequency	burst frequency in CVB mode, without jitter	390	430	470	Hz
f_{jit}/f_{sw}	jitter frequency to switching frequency ratio	in all operation modes except in CVB mode	5	7	9	%
$f_{osc\text{-}high}$	oscillator frequency High	maximum switching frequency in CV and CC mode, without jitter	48	50.5	53	kHz
$f_{osc\text{-}low}$	oscillator frequency Low	minimum switching frequency in CV and CC mode, without jitter. Switching frequency in CVB mode	21	22.5	24	kHz
f_{sweep}	jitter sweep frequency	In current source operation	150	200	250	Hz
δ_{max}	maximum duty cycle		72	75	78	%

All information provided in this document is subject to legal disclaimers.

© NXP B.V. 2012. All rights reserved.

Table 5. Characteristics *…continued*

V_{CC} = 20 V; V_{FB} = 0 V; R_{source} = 1.5 Ω; $T_{j\text{-}switch}$ = 25 °C; $T_{j\text{-}controller}$ = 25 °C; all voltages referenced to GND, positive currents flow into the IC, unless otherwise specified.

Symbol	Parameter	Conditions	Min	Typ	Max	Unit
Power switch (Pin: DRAIN)						
$I_{drain(off)}$	off-state drain current	V_{DRAIN} = 325 V	-	1	-	µA
R_{DSon}	drain-source on-state resistance	T_j = 25 °C; I_{ds} = 30 mA	13	15.5	17	Ω
$V_{(BR)DS}$	drain-source breakdown voltage		700	-	-	V
Peak current comparator (Pin: SOURCE)						
t_{PD}	propagation delay time	dV/dt = 0.2 V/µs	-	100	-	ns
t_{leb}	leading edge blanking time		290	325	360	ns
$V_{ref\text{-}peak\text{-}high}$	reference voltage, high peak voltage	maximum peak voltage in CV and CC modes, without jitter	0.525	0.555	0.585	V
$V_{ref\text{-}peak\text{-}low}$	reference voltage, low peak voltage	in CVB mode	0.085	0.1	0.115	V
$V_{ref\text{-}0\ V}$	reference voltage at start-up or 0 V feedback voltage	in CC mode with V_{FBS} = 0 V	0.18	0.21	0.24	V

All information provided in this document is subject to legal disclaimers.

© NXP B.V. 2012. All rights reserved.

9. Package outline

SO7: plastic small outline package; 7 leads; body width 3.9 mm **SOT1175-1**

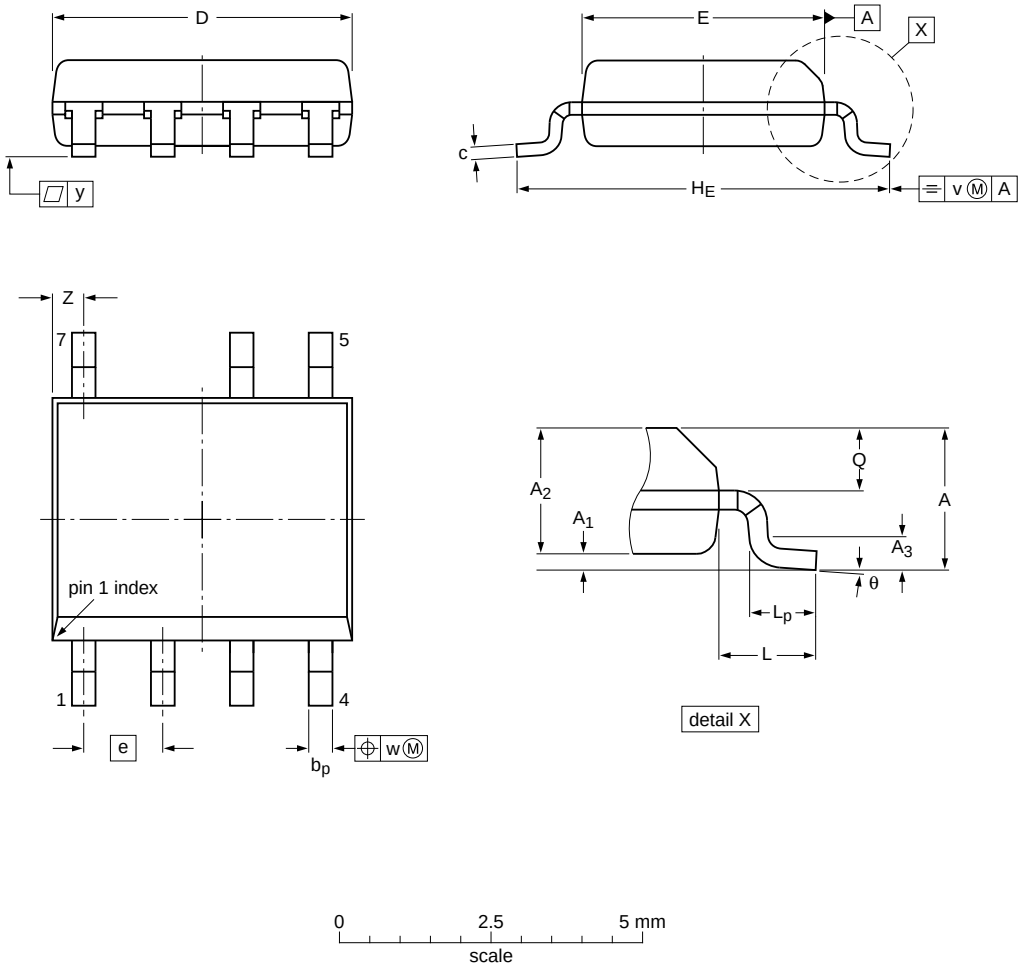

Dimensions

Unit		A	A_1	A_2	A_3	b_p	c	D	E	e	H_E	L	L_p	Q	v	w	y	Z	θ
	max	1.75	0.250	1.45		0.49	0.25	5.0	4.0		6.2		1.0	0.70				0.7	8°
mm	nom		0.175	1.35	0.25	0.40	0.20	4.9	3.9	1.27	6.0	1.05	0.7	0.67				0.5	4°
	min		0.100	1.25		0.36	0.19	4.8	3.8		5.8		0.4	0.60	0.25	0.25	0.1	0.3	0°

Note
1. Plastic or metal protrusions of 0.15 mm maximum per side are not included.
2. Plastic interlead protrusions of 0.25 mm maximum per side are not included.

sot1175-1_po

Outline version	References				European projection	Issue date
	IEC	JEDEC	JEITA			
SOT1175-1	- - -	- - -	- - -			~~10-03-30~~ 10-04-21

Fig 3. Package outline SOT1175-1 (SO7)

All information provided in this document is subject to legal disclaimers.

© NXP B.V. 2012. All rights reserved.

10. Revision history

Table 6. Revision history

Document ID	Release date	Data sheet status	Change notice	Supersedes
TEA1721AT v.2.1	20120607	Product data sheet	-	TEA1721AT v.2
Modifications:	• Symbol $t_{d(OCP)}$ changed to t_{PD} in table 5 on page 8. • Data sheet title changed.			
TEA1721AT v.2	20120507	Product data sheet	-	TEA1721AT v.1
TEA1721AT v.1	20120124	Preliminary data sheet	-	-

All information provided in this document is subject to legal disclaimers.

© NXP B.V. 2012. All rights reserved.

11. Legal information

11.1 Data sheet status

Document status[1] [2]	Product status[3]	Definition
Objective [short] data sheet	Development	This document contains data from the objective specification for product development.
Preliminary [short] data sheet	Qualification	This document contains data from the preliminary specification.
Product [short] data sheet	Production	This document contains the product specification.

[1] Please consult the most recently issued document before initiating or completing a design.

[2] The term 'short data sheet' is explained in section "Definitions".

[3] The product status of device(s) described in this document may have changed since this document was published and may differ in case of multiple devices. The latest product status information is available on the Internet at URLhttp://www.nxp.com.

11.2 Definitions

Preview — The document is a preview version only. The document is still subject to formal approval, which may result in modifications or additions. NXP Semiconductors does not give any representations or warranties as to the accuracy or completeness of information included herein and shall have no liability for the consequences of use of such information.

Draft — The document is a draft version only. The content is still under internal review and subject to formal approval, which may result in modifications or additions. NXP Semiconductors does not give any representations or warranties as to the accuracy or completeness of information included herein and shall have no liability for the consequences of use of such information.

Short data sheet — A short data sheet is an extract from a full data sheet with the same product type number(s) and title. A short data sheet is intended for quick reference only and should not be relied upon to contain detailed and full information. For detailed and full information see the relevant full data sheet, which is available on request via the local NXP Semiconductors sales office. In case of any inconsistency or conflict with the short data sheet, the full data sheet shall prevail.

Product specification — The information and data provided in a Product data sheet shall define the specification of the product as agreed between NXP Semiconductors and its customer, unless NXP Semiconductors and customer have explicitly agreed otherwise in writing. In no event however, shall an agreement be valid in which the NXP Semiconductors product is deemed to offer functions and qualities beyond those described in the Product data sheet.

11.3 Disclaimers

Limited warranty and liability — Information in this document is believed to be accurate and reliable. However, NXP Semiconductors does not give any representations or warranties, expressed or implied, as to the accuracy or completeness of such information and shall have no liability for the consequences of use of such information. NXP Semiconductors takes no responsibility for the content in this document if provided by an information source outside of NXP Semiconductors.

In no event shall NXP Semiconductors be liable for any indirect, incidental, punitive, special or consequential damages (including - without limitation - lost profits, lost savings, business interruption, costs related to the removal or replacement of any products or rework charges) whether or not such damages are based on tort (including negligence), warranty, breach of contract or any other legal theory.

Notwithstanding any damages that customer might incur for any reason whatsoever, NXP Semiconductors' aggregate and cumulative liability towards customer for the products described herein shall be limited in accordance with the*Terms and conditions of commercial sale* of NXP Semiconductors.

Right to make changes — NXP Semiconductors reserves the right to make changes to information published in this document, including without limitation specifications and product descriptions, at any time and without notice. This document supersedes and replaces all information supplied prior to the publication hereof.

Suitability for use — NXP Semiconductors products are not designed, authorized or warranted to be suitable for use in life support, life-critical or safety-critical systems or equipment, nor in applications where failure or malfunction of an NXP Semiconductors product can reasonably be expected to result in personal injury, death or severe property or environmental damage. NXP Semiconductors and its suppliers accept no liability for inclusion and/or use of NXP Semiconductors products in such equipment or applications and therefore such inclusion and/or use is at the customer's own risk.

Quick reference data — The Quick reference data is an extract of the product data given in the Limiting values and Characteristics sections of this document, and as such is not complete, exhaustive or legally binding.

Applications — Applications that are described herein for any of these products are for illustrative purposes only. NXP Semiconductors makes no representation or warranty that such applications will be suitable for the specified use without further testing or modification.

Customers are responsible for the design and operation of their applications and products using NXP Semiconductors products, and NXP Semiconductors accepts no liability for any assistance with applications or customer product design. It is customer's sole responsibility to determine whether the NXP Semiconductors product is suitable and fit for the customer's applications and products planned, as well as for the planned application and use of customer's third party customer(s). Customers should provide appropriate design and operating safeguards to minimize the risks associated with their applications and products.

NXP Semiconductors does not accept any liability related to any default, damage, costs or problem which is based on any weakness or default in the customer's applications or products, or the application or use by customer's third party customer(s). Customer is responsible for doing all necessary testing for the customer's applications and products using NXP Semiconductors products in order to avoid a default of the applications and the products or of the application or use by customer's third party customer(s). NXP does not accept any liability in this respect.

Limiting values — Stress above one or more limiting values (as defined in the Absolute Maximum Ratings System of IEC 60134) will cause permanent damage to the device. Limiting values are stress ratings only and (proper) operation of the device at these or any other conditions above those given in the Recommended operating conditions section (if present) or the Characteristics sections of this document is not warranted. Constant or repeated exposure to limiting values will permanently and irreversibly affect the quality and reliability of the device.

All information provided in this document is subject to legal disclaimers.

© NXP B.V. 2012. All rights reserved.

Terms and conditions of commercial sale — NXP Semiconductors products are sold subject to the general terms and conditions of commercial sale, as published at http://www.nxp.com/profile/terms, unless otherwise agreed in a valid written individual agreement. In case an individual agreement is concluded only the terms and conditions of the respective agreement shall apply. NXP Semiconductors hereby expressly objects to applying the customer's general terms and conditions with regard to the purchase of NXP Semiconductors products by customer.

No offer to sell or license — Nothing in this document may be interpreted or construed as an offer to sell products that is open for acceptance or the grant, conveyance or implication of any license under any copyrights, patents or other industrial or intellectual property rights.

Export control — This document as well as the item(s) described herein may be subject to export control regulations. Export might require a prior authorization from competent authorities.

Non-automotive qualified products — Unless this data sheet expressly states that this specific NXP Semiconductors product is automotive qualified, the product is not suitable for automotive use. It is neither qualified nor tested in accordance with automotive testing or application requirements. NXP Semiconductors accepts no liability for inclusion and/or use of non-automotive qualified products in automotive equipment or applications.

In the event that customer uses the product for design-in and use in automotive applications to automotive specifications and standards, customer (a) shall use the product without NXP Semiconductors' warranty of the product for such automotive applications, use and specifications, and (b) whenever customer uses the product for automotive applications beyond NXP Semiconductors' specifications such use shall be solely at customer's own risk, and (c) customer fully indemnifies NXP Semiconductors for any liability, damages or failed product claims resulting from customer design and use of the product for automotive applications beyond NXP Semiconductors' standard warranty and NXP Semiconductors' product specifications.

Translations — A non-English (translated) version of a document is for reference only. The English version shall prevail in case of any discrepancy between the translated and English versions.

11.4 Trademarks

Notice: All referenced brands, product names, service names and trademarks are the property of their respective owners.

Adelante,**Bitport**,**Bitsound**,**CoolFlux**,**CoReUse**,**DESFire**,**EZ-HV**,**FabKey**,**GreenChip**,**HiPerSmart**,**HITAG**,**I²C-bus** logo,**ICODE**,**I-CODE**,**ITEC**,**Labelution**,**MIFARE**,**MIFARE Plus**,**MIFARE Ultralight**,**MoReUse**,**QLPAK**,**Silicon Tuner**,**SiliconMAX**,**SmartXA**,**STARplug**,**TOPFET**,**TrenchMOS**,**TriMedia** and**UCODE** — are trademarks of NXP B.V.

HD Radio and**HD Radio** logo — are trademarks of iBiquity Digital Corporation.

12. Contact information

For more information, please visit:http://www.nxp.com

For sales office addresses, please send an email to:salesaddresses@nxp.com

All information provided in this document is subject to legal disclaimers.

© NXP B.V. 2012. All rights reserved.

13. Contents

1 Product profile 1
1.1 General description 1
1.2 Features and benefits 1
1.3 Applications 2
1.4 Quick reference data 2
2 Ordering information 3
3 Block diagram 3
3.1 Block diagram 3
4 Pinning information 4
4.1 Pinning 4
4.2 Pin description 4
5 Functional description 4
5.1 Start-up 4
5.2 Primary sensing 4
5.3 Operating modes 5
5.4 Jitter 6
5.3.1 Constant Voltage with Burst mode (CVB) 5
5.3.2 Constant Voltage mode (CV) 5
5.3.3 Constant Current mode (CC) 6
6 Limiting values 7
7 Thermal characteristics 7
8 Characteristics 8
9 Package outline 10
10 Revision history 11
11 Legal information 12
11.1 Data sheet status 12
11.2 Definitions 12
11.3 Disclaimers 12
11.4 Trademarks 13
12 Contact information 13

Please be aware that important notices concerning this document and the product(s) described herein, have been included in section 'Legal information'.

© NXP B.V. 2012. All rights reserved.

For more information, please visit: http://www.nxp.com
For sales office addresses, please send an email to: salesaddresses@nxp.com

Date of release: 7 June 2012
Document identifier: TEA1721AT

ENTEGRECİ

Bu belge www.entegreci.com üzerinden sunulmaktadır.

Elektronik komponent tedarikinde Entegreci

Entegreci, Eskişehir merkezli, Türkiye geneline satış yapan bir elektronik komponent mağazasıdır. Entegreler (IC), mikrodenetleyiciler, transistörler, diyotlar, pasif elemanlar, konnektörler, modüller ve geliştirme kartları tek adetten seri üretim adetlerine kadar satılır. Ürün sayfalarında güncel stok durumunu, fiyatı ve datasheet bağlantısını bulabilirsiniz.

Parça koduyla arama

Üretici parça numarasını yazın; stok ve fiyatı hemen görün.

www.entegreci.com

Ürün kategorileri

Entegreden kapasitöre tüm elektronik komponent kategorileri.

Kategorilere göz atın

Üreticiler

Aradığınız üreticinin ürünlerini tek sayfada inceleyin.

Üreticileri görün

Toplu alım ve teklif

Listede olmayan ya da yüksek adetli parçalar için teklif isteyin.

Teklif isteyin

www.entegreci.com | **destek@entegreci.com** | **0850 305 90 34**

Entegreci is an online electronic components store based in Türkiye. Search by manufacturer part number to see stock, prices and datasheets for integrated circuits, microcontrollers, transistors, passive components and connectors, or request a quote for parts that are not listed.

Bu sayfa Entegreci tarafından eklenmiştir. Belgenin önceki sayfaları asıl yayıncısına aittir ve içeriği değiştirilmemiştir; en güncel sürüm için belgenin yayıncısına başvurun.