50V, 200mA, Low-I_Q 30μA Low-Dropout Linear Regulator with Enable

DESCRIPTION

The TQL821CSV33 is a high-performance low dropout linear regulator for 3.3V with input range of 3V to 50V and low quiescent 30μA. TQL821CSV33 provides 2% output voltage accuracy and 200mA maximum driving current and is suitable for automotive or other supply systems. TQL821CSV33 just requires one small ceramic capacitor of 1μF to exhibit fast regulation and good stability. And it shows very low dropout voltage with 70mV in 100mA-load and 110mV in 200mA-load. The start operating voltage is 3V which is suitable to cranking condition of automotive system.

The device has an enable function to switch ON and OFF for power dissipation. And other protection functions such as thermal-shutdown and current-limit are against immediate damage.

FEATURES

- AEC-Q100 qualified with the following results:
  - Device temperature grade 1: -40°C to 125°C
  - Device HBM ESD classification level H1C
  - Device CDM ESD classification level C3
- 3V to 50V Input Voltage Range
- 3.3V Fixed Output Voltage
- 70mV@100mA Low Dropout Voltage
- 200mA Output Current
- Typical 30μA Low Quiescent Current
- Typical ±2% Output Voltage Accuracy
- 1μF Ceramic Output Stable Capacitor
- Output Current Limit
- Over Temperature Protection
- RoHS Compliant
- Halogen-Free according to IEC 61249-2-21

APPLICATION

- Automotive Power Supply Systems
- General Power Supply applications

Pb-Free RoHS COMPLIANT HALOGEN FREE

SOP-8EP

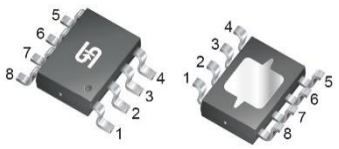

Pin Definition:

1.IN	5. NC
2.EN	6. NC
3.NC	7. NC
4.GND	8. OUT

Notes: MSL 3 (Moisture Sensitivity Level) per J-STD-020

TYPICAL APPLICATION CIRCUIT

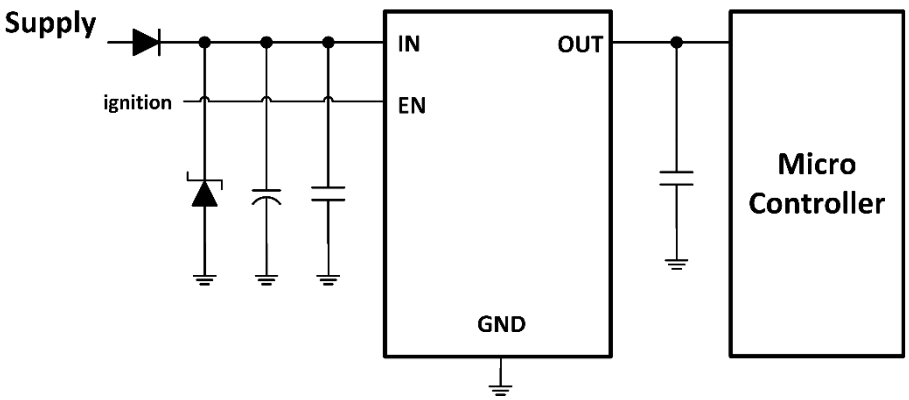

ABSOLUTE MAXIMUM RATINGS (T_A = 25°C unless otherwise specified) (Note 1)			
PARAMETER	**SYMBOL**	**LIMIT**	**UNIT**
Power Supply Pin	V_{IN}	55	V
EN Voltage to GND	V_{EN}	-0.3 to 55	V
OUT Voltage to GND	V_{OUT}	-0.3 to 7	V
Junction Temperature Range	T_J	-40 to +150	°C
Storage Temperature Range	T_{STG}	-55 to +150	°C
ESD Rating (Human Body Model) (Note 2)	HBM	±2	kV
ESD Rating (Charged Device Model)	CDM	±1	kV

THERMAL PERFORMANCE			
PARAMETER	**SYMBOL**	**TYP**	**UNIT**
Junction to Case Thermal Resistance	$R_{\Theta JC}$	11	°C/W
Junction to Ambient Thermal Resistance	$R_{\Theta JA}$	43	°C/W

Notes: The thermal data is based on the PCB JESD 51-3 at natural convection on 1s0p board with 1 copper layer (1 x 70μm Cu) and with 300mm^2 heatsink area on PCB

RECOMMENDED OPERATING CONDITIONS (Note 3)			
PARAMETER	**SYMBOL**	**CONDITIONS**	**UNIT**
Power Supply Pin	V_{IN}	$V_{OUT}+V_{dr}$ to 50	V
Extended Power Supply Pin	$V_{IN,ext}$	3 to 50	V
EN Voltage to GND	V_{EN}	0 to 50	V
Output Stable Capacitor	C_{OUT}	≧1	μF
ESR of Output Capacitor	ESR	≦100	Ω
Operating Junction Temperature Range	T_J	-40 to +150	°C
Operating Ambient Temperature Range	T_{OPA}	-40 to +125	°C

ELECTRICAL SPECIFICATIONS (V_{IN} = 13.5V, T_J = -40 to 150°C unless otherwise noted)						
PARAMETER	**CONDITIONS**	**SYMBOL**	**MIN**	**TYP**	**MAX**	**UNIT**
Supply Voltage						
Output Voltage	0.05mA < I_{OUT} < 200mA 3.72V < V_{IN} < 28V	V_{OUT}	3.23	3.3	3.37	V
Output Voltage	0.05mA < I_{OUT} < 100mA 3.55V < V_{IN} < 40V	V_{OUT}	3.23	3.3	3.37	V
Start-up Slew-rate	V_{IN} > 18V/ms C_{OUT} = 1μF 0.33V < V_{OUT} < 2.97V	dV_{OUT}/dt	--	35	--	V/ms
Current Limit	0V < V_{OUT} < 3.1V	I_{lim}	--	320	--	mA
Load Regulation	I_{OUT} = 0.05 to 200mA V_{IN} = 6V	$\Delta V_{OUT,Io}$	-15	-1.5	+15	mV

ELECTRICAL SPECIFICATIONS (V_{IN} = 13.5V, T_J = -40 to 150°C unless otherwise noted)						
PARAMETER	**CONDITIONS**	**SYMBOL**	**MIN**	**TYP**	**MAX**	**UNIT**
Supply Voltage						
Line Regulation	V_{IN} = 8 to 32V I_{OUT} = 1mA	$\Delta V_{OUT,li}$	-15	0	15	mV
Dropout Voltage (V_{dr}=V_{IN}-V_{OUT})	I_{OUT} = 200mA	V_{dr}	--	140	340	mV
Dropout Voltage (V_{dr}=V_{IN}-V_{OUT})	I_{OUT} = 100mA	V_{dr}	--	70	170	mV
Power Supply Ripple Rejection	f = 100Hz, V = 0.5Vpp	PSRR	--	59	--	dB
Thermal Shutdown Threshold (Note 4)		T_{th}	151	--	200	°C
Thermal Shutdown Hysteresis (Note 4)		T_{hy}	--	30	--	°C
Current Consumption						
Standby Current (I_O=I_{IN})	V_{EN} = 0V, T_J < 105°C	$I_{O,st}$	--	1.3	5	μA
Standby Current (I_O=I_{IN})	V_{EN} = 0.4V, T_J < 125°C	$I_{O,st}$	--	--	8	μA
Quiescent Current (I_O=I_{IN}-I_{OUT})	I_{OUT} = 0.05mA, T_J = 25°C	I_O	--	30	52	μA
Quiescent Current (I_O=I_{IN}-I_{OUT})	I_{OUT} = 0.05mA, T_J < 125°C	I_O		62	77	μA
Enable						
High Level Input Voltage		V_{ENH}	2	--	--	V
Low Level Input Voltage	V_{OUT} ≦ 0.1V	V_{ENL}	--	--	0.8	V
Threshold Hysteresis		V_{ENHy}	100	--	--	mV
EN Input Current	V_{EN} = 3.3V	I_{EN}	--	--	3.5	μA
EN Input Current	V_{EN} ≦ 18V	I_{EN}	--	--	22	μA
EN Pull-down Resistor		R_{EN}	0.95	1.5	2.6	mΩ

Note:

1. Stresses listed as the above “Absolute Maximum Ratings” may cause permanent damage to the device. These are for stress ratings. Functional operation of the device at these or any other conditions beyond those indicated in the operational sections of the specifications is not implied. Exposure to absolute maximum rating conditions for extended periods may remain possibility to affect device reliability.
2. Devices are ESD sensitive. Handing precaution recommended.
3. The device is not guaranteed to function outside its operating conditions.
4. Guaranteed by design.

ORDERING INFORMATION

ORDERING CODE	PACKAGE	PACKING
TQL821CSV33 RLG	SOP-8EP	2,500pcs / 13” Reel

BLOCK DIAGRAM

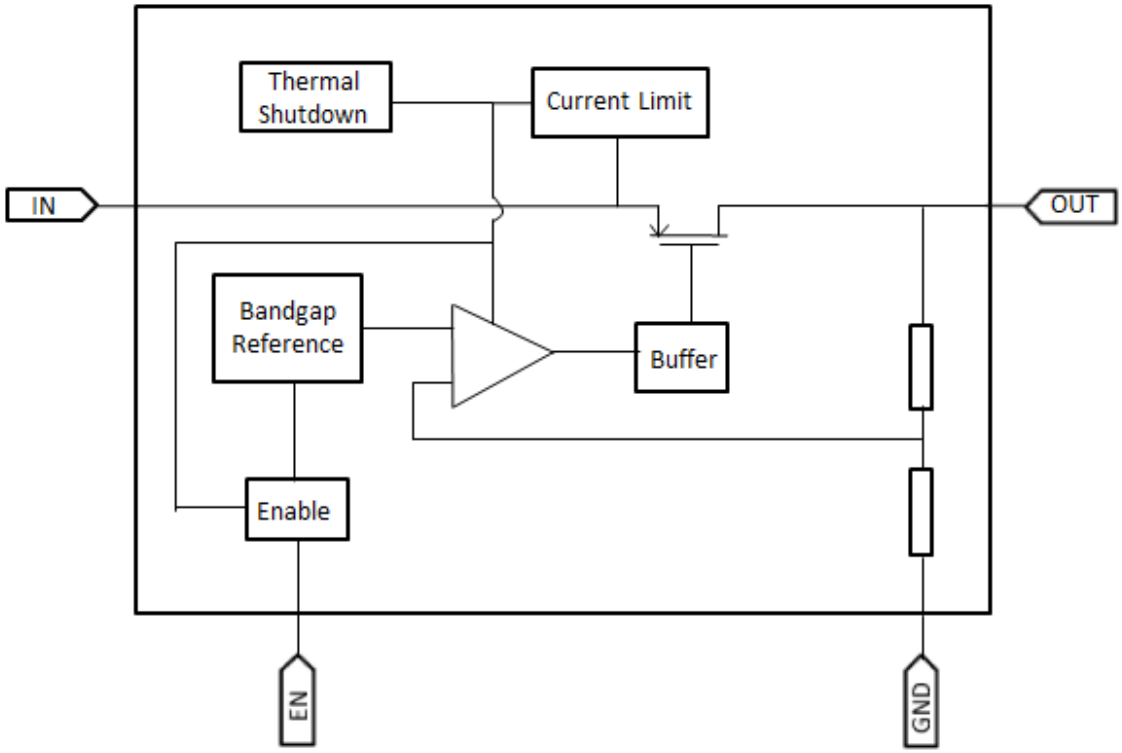

PIN DESCRIPTION

PIN NO.	NAME	FUNCTION
1	IN	Power supply pin for system
2	EN	Enable system function
3	NC	Not connected
4	GND	Ground
5	NC	Not connected
6	NC	Not connected
7	NC	Not connected
8	OUT	Output supply voltage
Pad	--	Connect to GND

APPLICATION INFORMATION

TQL821CSV33 is a high performance low dropout voltage regulator. The device operates with a wide input voltage from 3V to 50V and up to 200mA of output current. It also provides a high accuracy output voltage for ±2% in all the load and line regulation.

Enable

The EN pin is high voltage tolerant pin. High input enables the device ON and low is disable which can be connected to microcontroller or digital control system. It can be connected to input power pin directly.

Thermal Shutdown (TSD)

Internal 160°C comparator will trigger temperature protection (TSD). TSD will shut down system, until internal temperature back to 130°C.

Current Limit

The TQL821CSV33 features Current Limit function to protect device from damage by excessive power dissipation such as OUT shorted to GND. It limits output current to maintain power dissipation in the safe region.

TYPICAL OPERATING CHARACTERISTICS

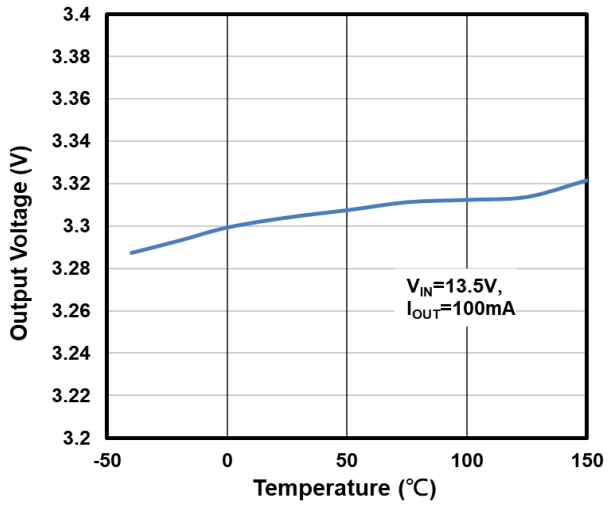

Figure 1. Output Voltage vs. Junction Temperature

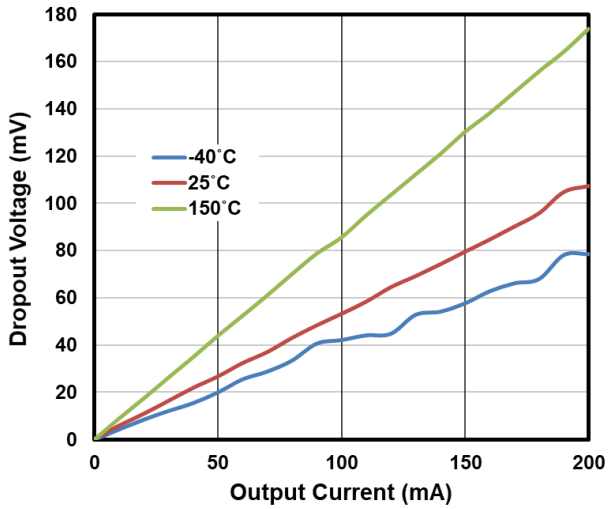

Figure 2. Dropout Voltage vs. Output Current

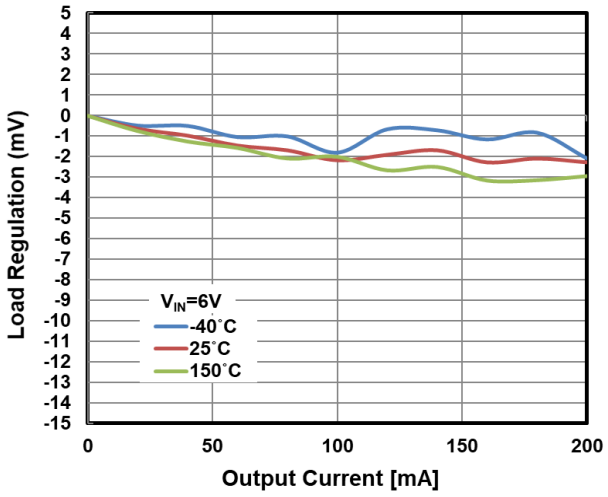

Figure 3. Load Regulation vs. Output Current

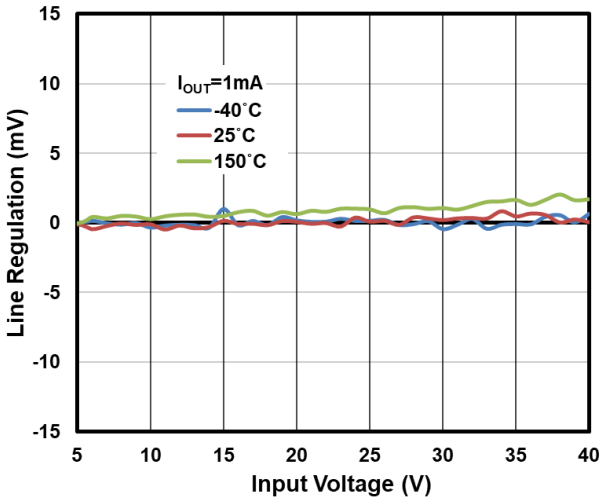

Figure 4. Line Regulation vs. Input Voltage

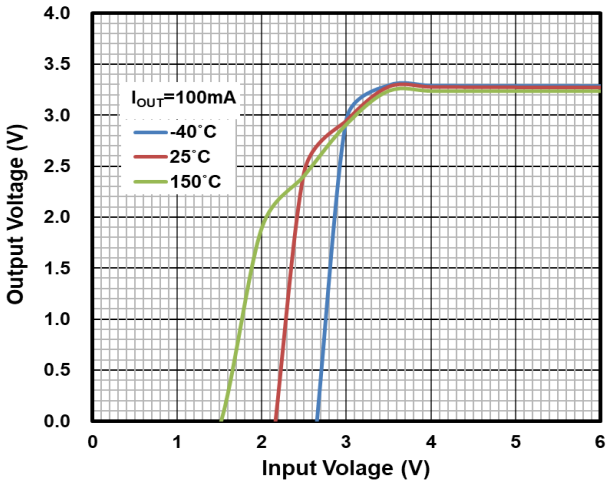

Figure 5. Output Voltage vs. Input Voltage

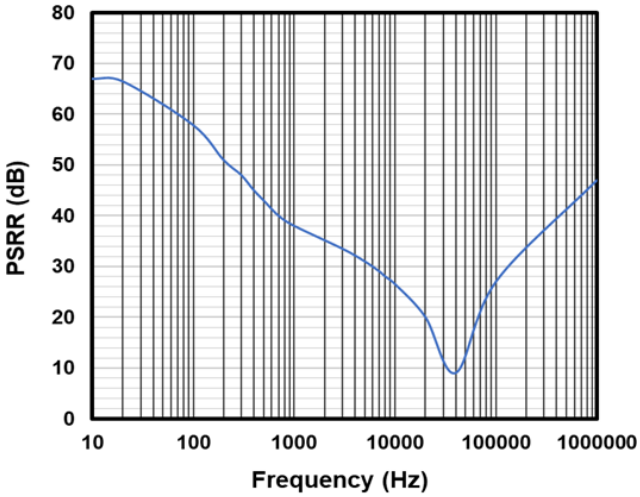

Figure 6. Ripple Rejection vs. Frequency

TYPICAL OPERATING CHARACTERISTICS (CONTINUE)

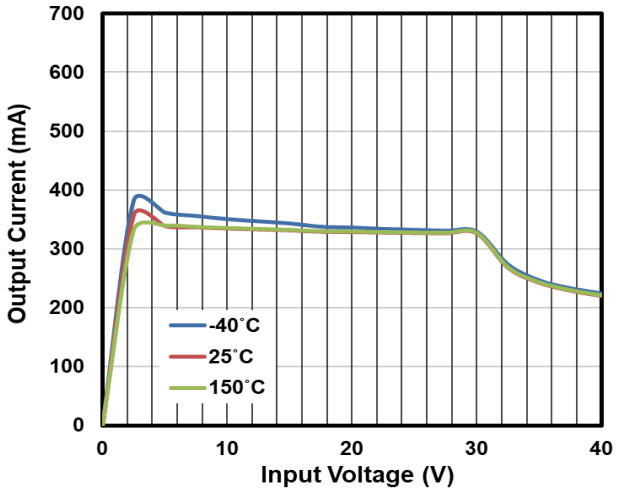

Figure 7. Output Current vs. Input Voltage

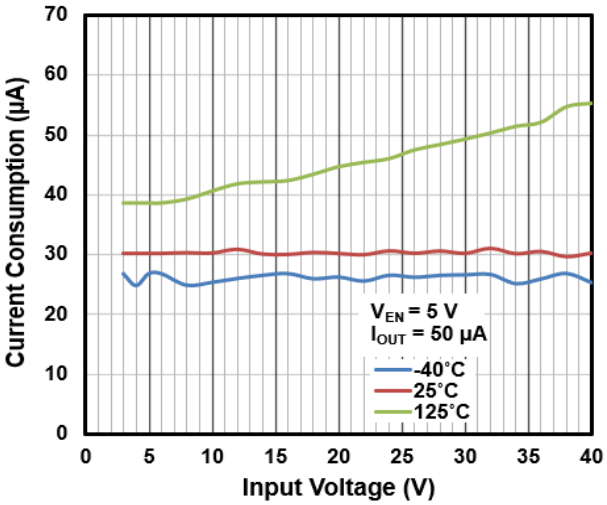

Figure 8. Current Consumption vs. Input Voltage

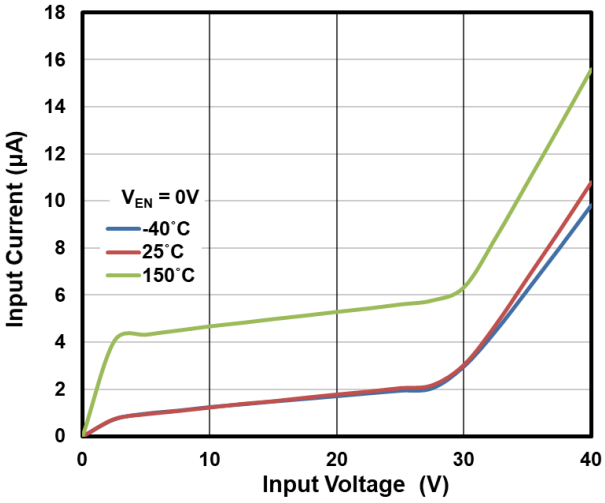

Figure 9. Input Current vs. Input Voltage

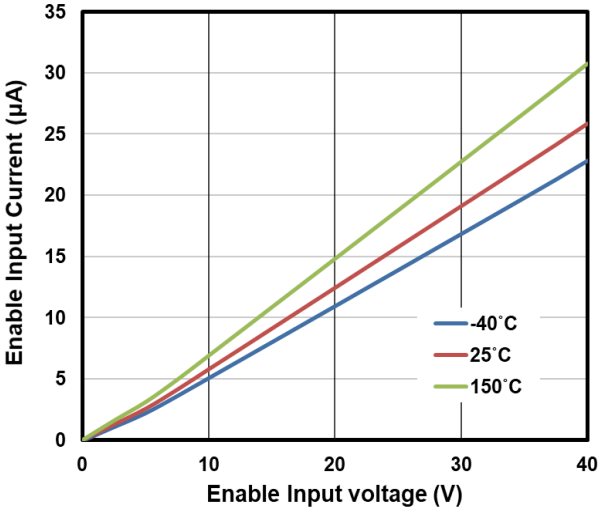

Figure 10. Enabled Input Current vs. Enabled Input Voltage

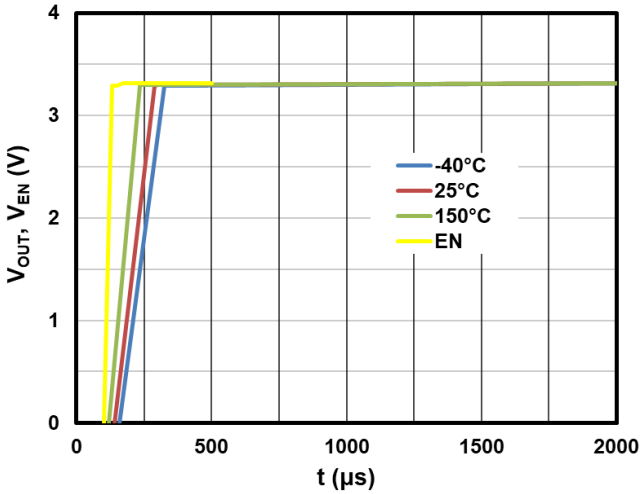

Figure 11. Output Voltage vs. time (EN switched ON)

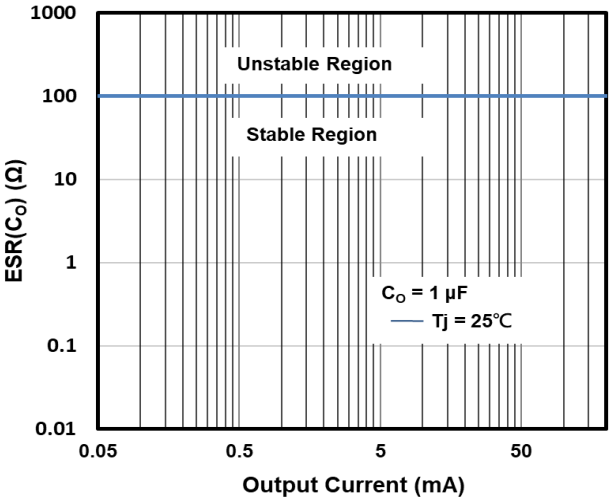

Figure 12. Output Capacitor Series Resistor ESR(C_O) vs. Output Current

PACKAGE OUTLINE DIMENSIONS

SOP-8EP

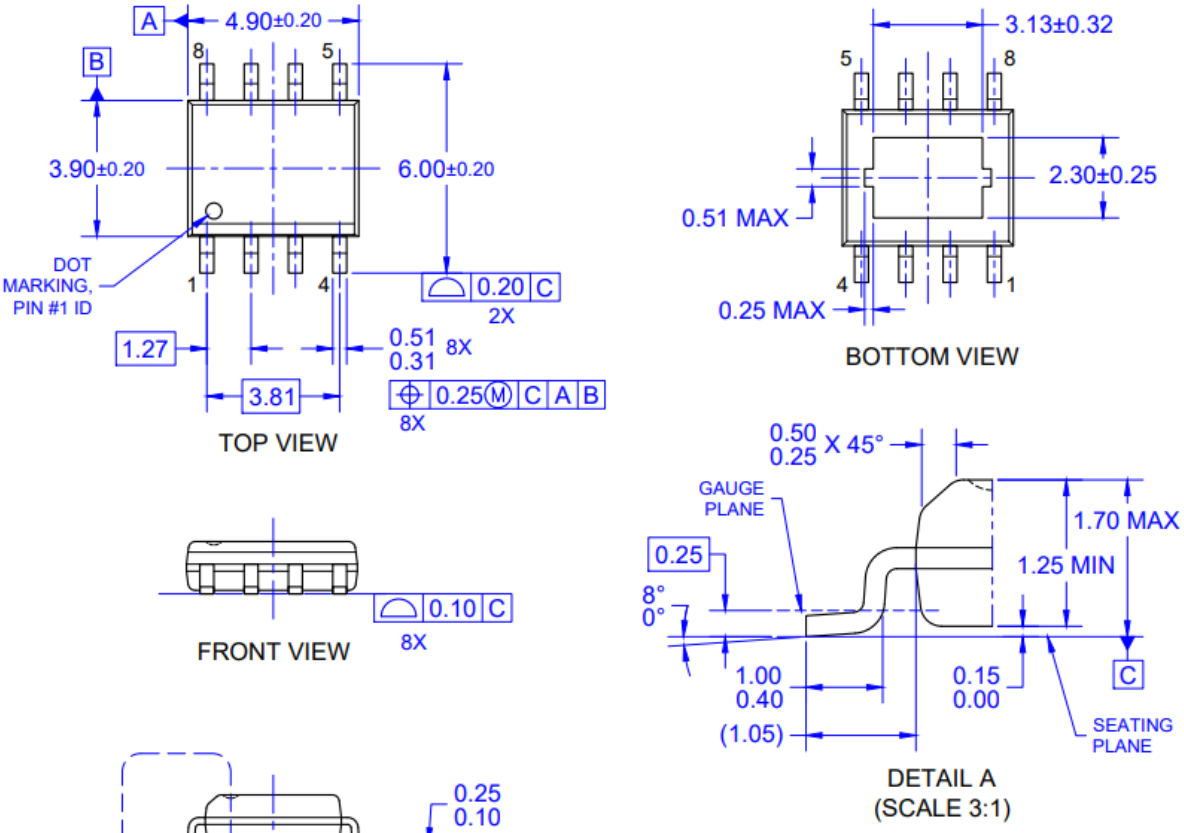



MARKING DIAGRAM

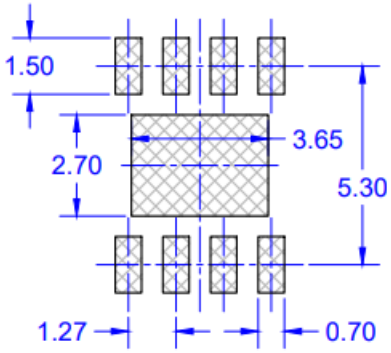

SUGGESTED PAD LAYOUT

Y = Year Code

M = Month Code for Halogen Free Product

O =Jan	**P** =Feb	**Q** =Mar	**R** =Apr
S =May	**T** =Jun	**U** =Jul	**V** =Aug
W =Sep	**X** =Oct	**Y** =Nov	**Z** =Dec

L = Lot Code (1~9, A~Z)

NOTES: UNLESS OTHERWISE SPECIFIED

1. ALL DIMENSIONS ARE IN MILLIMETERS.
2. DIMENSIONING AND TOLERANCING PER ASME Y14.5M-1994.
3. PACKAGE OUTLINE REFERENCE: JEDEC MS-012, ISSUE G, VARIATION BA.
4. MOLDED PLASTIC BODY DIMENSIONS DO NOT INCLUDE MOLD FLASH, PROTRUSIONS OR GATE BURRS.
5. DWG NO REF: HQ2SD07-030 REV A.

Notice

Specifications of the products displayed herein are subject to change without notice. TSC or anyone on its behalf, assumes no responsibility or liability for any errors or inaccuracies.

Purchasers are solely responsible for the choice, selection, and use of TSC products and TSC assumes no liability for application assistance or the design of Purchasers' products.

Information contained herein is intended to provide a product description only. No license, express or implied, to any intellectual property rights is granted by this document. Except as provided in TSC's terms and conditions of sale for such products, TSC assumes no liability whatsoever, and disclaims any express or implied warranty, relating to sale and/or use of TSC products including liability or warranties relating to fitness for a particular purpose, merchantability, or infringement of any patent, copyright, or other intellectual property right.

The products shown herein are not designed for use in medical, life-saving, or life-sustaining applications. Customers using or selling these products for use in such applications do so at their own risk and agree to fully indemnify TSC for any damages resulting from such improper use or sale.

ENTEGRECİ

Bu belge www.entegreci.com üzerinden sunulmaktadır.

Elektronik komponent tedarikinde Entegreci

Entegreci, Eskişehir merkezli, Türkiye geneline satış yapan bir elektronik komponent mağazasıdır. Entegreler (IC), mikrodenetleyiciler, transistörler, diyotlar, pasif elemanlar, konnektörler, modüller ve geliştirme kartları tek adetten seri üretim adetlerine kadar satılır. Ürün sayfalarında güncel stok durumunu, fiyatı ve datasheet bağlantısını bulabilirsiniz.

Parça koduyla arama

Üretici parça numarasını yazın; stok ve fiyatı hemen görün.

www.entegreci.com

Ürün kategorileri

Entegreden kapasitöre tüm elektronik komponent kategorileri.

Kategorilere göz atın

Üreticiler

Aradığınız üreticinin ürünlerini tek sayfada inceleyin.

Üreticileri görün

Toplu alım ve teklif

Listede olmayan ya da yüksek adetli parçalar için teklif isteyin.

Teklif isteyin

www.entegreci.com | **destek@entegreci.com** | **0850 305 90 34**

Entegreci is an online electronic components store based in Türkiye. Search by manufacturer part number to see stock, prices and datasheets for integrated circuits, microcontrollers, transistors, passive components and connectors, or request a quote for parts that are not listed.

Bu sayfa Entegreci tarafından eklenmiştir. Belgenin önceki sayfaları asıl yayıncısına aittir ve içeriği değiştirilmemiştir; en güncel sürüm için belgenin yayıncısına başvurun.