Low Quiescent Current Low-Dropout Linear Voltage Regulator

DESCRIPTION

TS3480 series is an integrated linear voltage regulator. It can be provided the operation from an input as high as 30V and a guaranteed maximum dropout of 1.2V at the full 100mA load. The 1.2V quasi low dropout of TS3480 series is able to makes them a nice fit in many applications where the 2 to 2.5V dropout of TS78LXX series devices precludes their use.

The TS3480 series features 5V & 3.3V output voltage options. The SOT packaging and quasi low dropout features of the TS3480 series converge in this device to provide a very nice, very tiny 5V & 3.3V, 100mA bias supply that regulates directly off the system power supply.

FEATURES

- 30V maximum input for operation
- 2V guaranteed maximum dropout over full load and temperature ranges
- 100mA guaranteed minimum load current
- ±5% guaranteed output voltage tolerance over full load and temperature ranges
- −40 to +125˚C junction temperature range for operation
- Compliant to RoHS Directive 2011/65/EU and in accordance to WEEE 2002/96/EC.
- Halogen-free according to IEC 61249-2-21

APPLICATION

- Tiny alternative to TS78LXX series and similar devices
- Tiny 5V±5% to 3.3V, 100mA converter
- Post regulator for switching DC/DC converter
- Bias supply for analog circuits

Pb-Free RoHS COMPLIANT HALOGEN FREE

SOT-23

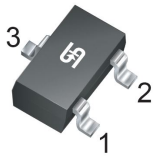

Pin Definition:
1. Output
2. Input
3. Ground

Notes: MSL 1 (Moisture Sensitivity Level) per J-STD-020

TYPICAL APPLICATION CIRCUIT

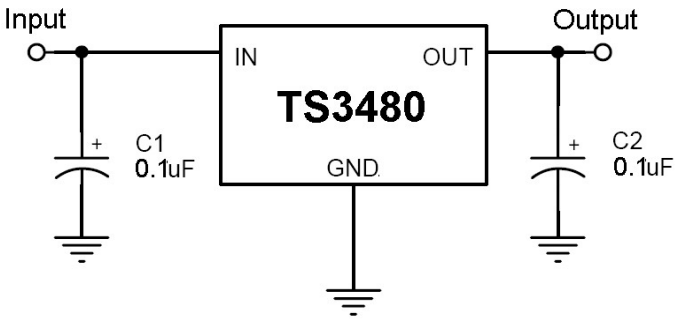

ABSOLUTE MAXIMUM RATINGS (T_A = 25°C unless otherwise specified) (Note 1)			
PARAMETER	**SYMBOL**	**LIMIT**	**UNIT**
Input Voltage	V_{IN}	35	V
Operating Input Voltage	V_{OPER}	30	V
Output Current Range	I_{OUT}	100	mA
Power Dissipation (Note 2)	P_D	350	mW
Junction Temperature	T_J	+150	°C
Operating Temperature Range	T_{OPER}	-40 ~ +125	°C
Storage Temperature Range	T_{STG}	-65 ~ +150	°C
Lead Soldering Time (260°C) (Note 3)	T_{SOLDER}	4	Sec
ESD (note 4)	HBM	2	kV

ELECTRICAL SPECIFICATIONS (T_A = 25°C unless otherwise specified)						
PARAMETER	**SYMBOL**	**CONDITION**	**MIN**	**TYP**	**MAX**	**UNIT**
3.3V Output						
Output Voltage	V_{OUT}	V_{IN} = 4.8V, Io= 1mA ~ 100mA	3.17	3.3	3.43	V
Line Regulation	ΔV_{DDLine}	4.8V ≤ V_{IN} ≤ 30V, Io= 1mA	--	10	25	mV
Load Regulation	ΔV_{DDLoad}	V_{IN} = 4.8V, Io= 1mA~100mA	--	20	40	mV
Dropout Voltage	V_{DROP_OUT}	Io=10mA	--	0.75	0.9	V
		Io=100mA	--	0.95	1.1	V
Quiescent Current		V_{IN} = 4.8V ≤ V_{IN} ≤ 30V, Io=0V	--	3	5	mA
Output Current	I_{OUT}	V_{IN} - V_{OUT} = 20V	100	--	--	mA
Ripple Rejection		F= 10Hz ~ 100kHz, Io= 0mA, C_{OUT} = 0.1μF, V_{IN} = 10V	--	100	--	μV_{RMS}
5.0V Output						
Output Voltage	V_{OUT}	V_{IN} = 6.5V, Io= 1mA ~ 100mA	4.80	5.0	5.20	V
Line Regulation	ΔV_{DDLine}	6.5V ≤ V_{IN} ≤ 30V, Io= 1mA	--	10	25	mV
Load Regulation	ΔV_{DDLoad}	V_{IN} = 6.5V, Io= 10mA~100mA	--	20	40	mV
Dropout Voltage	V_{DROP_OUT}	Io=10mA	--	0.75	0.9	V
		Io=100mA	--	0.95	1.1	V
Quiescent Current		V_{IN} = 6.5V ≤ V_{IN} ≤ 30V, Io=0V	--	3	5	mA
Output Current	I_{OUT}	V_{IN} - V_{OUT} = 20V	100	--	--	mA
Ripple Rejection		F= 10Hz ~ 100kHz, Io= 0mA, C_{OUT} = 0.1μF, V_{IN} = 10V	--	150	--	μVrms

Note:

1. Absolute Maximum Ratings are limits beyond which damage to the device may occur. Operating ratings are conditions under which operation of the device is guaranteed. Operating ratings do not imply guaranteed performance limits. For guaranteed performance limits and associated test conditions, see the Electrical Characteristics.
2. The Absolute Maximum power dissipation depends on the ambient temperature and can be calculated using $P = (T_J - T_A) / R_{\theta JA}$ where T_J is the junction temperature, Ta is the ambient temperature, and $R_{\theta JA}$ is the junction-to-ambient thermal resistance. The 350mW rating results from substituting the absolute maximum junction temperature, 150°C for T_J, 50°C for Ta, and 300°C/W for $R_{\theta JA}$. More power can be safely dissipated at lower ambient temperatures, and less power can be safely dissipated at higher ambient temperatures. The absolute maximum power dissipation can be increased by 3.5mW for each Celsius below 50°C ambient. It must be derated by 3.5mW for each Celsius above 50°C ambient. A $R_{\theta JA}$ of 300°C/W represents the worst-case condition of no heat sinking of the 3-lead plastic SOT-23 package. Heat sinking enables the safe dissipation of more power. The TS3480 actively limits its junction temperature to about 150°C.
3. Times shown are dwell times. Temperatures shown are dwell temperatures.
4. For testing purposes, ESD was applied using the Human-Body Model, a 100pF capacitor discharged through a 1.5kΩ resistor.
5. A typical is the center of characterization data taken with $T_A = T_J = 25°C$. Typical are not guaranteed.
6. All limits are guaranteed. All electrical characteristics having room-temperature limits are tested during production with $T_A = T_J = 25°C$. All hot and cold limits are guaranteed by correlating the electrical characteristics to process and temperature variations and applying statistical process control.
7. All voltages except dropout are with respect to the voltage at the GND pin.

ORDERING INFORMATION

OUTPUT VOLTAGE	ORDERING CODE	PACKAGE	PACKING
3.3V	TS3480CX33 RFG	SOT-23	3,000pcs / 7” Reel
5V	TS3480CX50 RFG	SOT-23	3,000pcs / 7” Reel

CHARACTERISTICS CURVES

(T_C = 25°C unless otherwise noted)

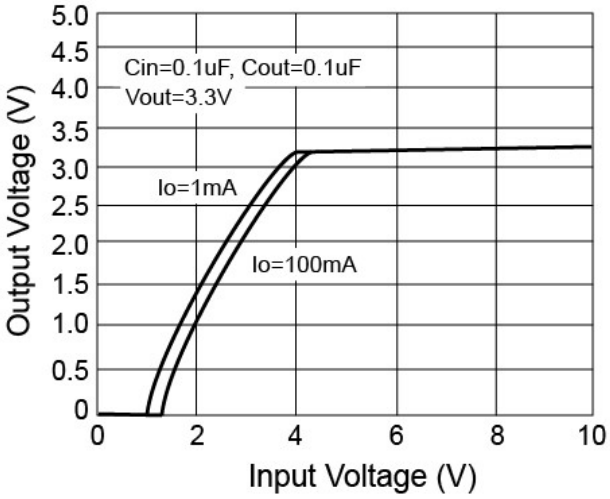

Figure 1. Output Voltage vs. Input Voltage

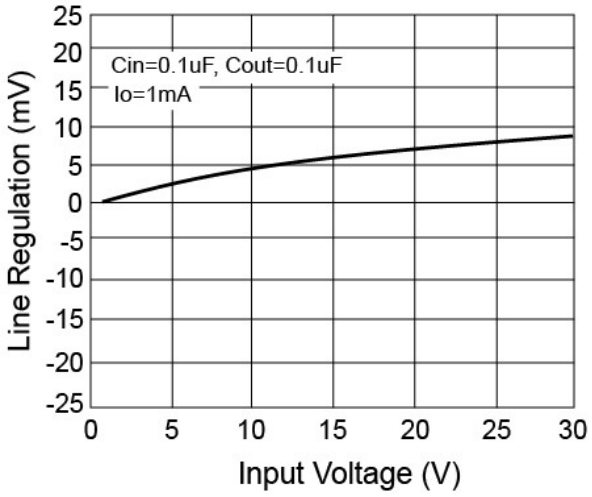

Figure 2. Line Regulation

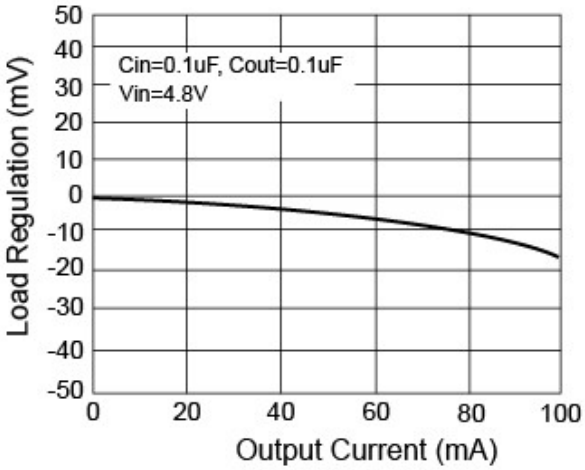

Figure 3. Load Regulation

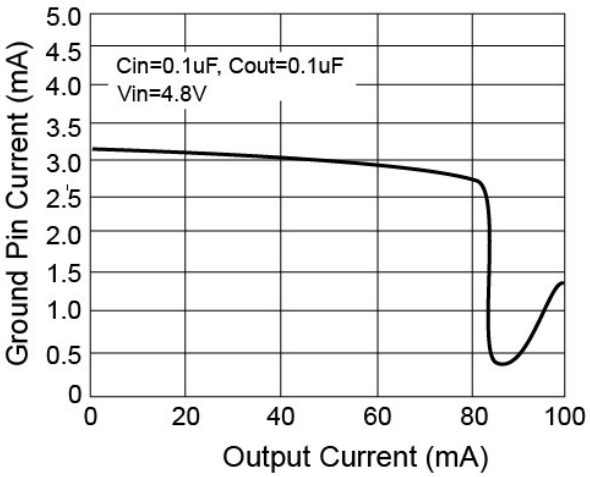

Figure 4. Ground Pin Current vs. Output Current

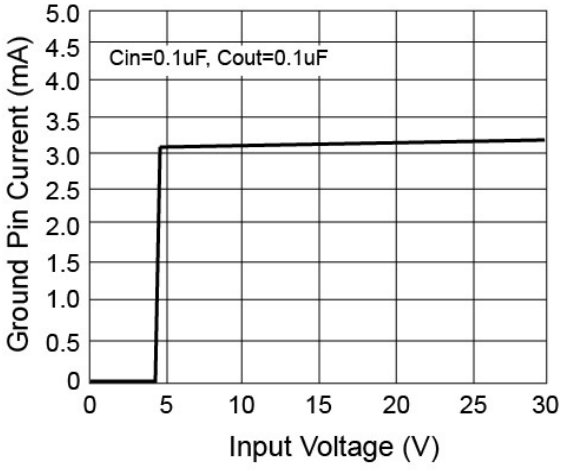

Figure 5. Ground Pin Current vs. Input Voltage

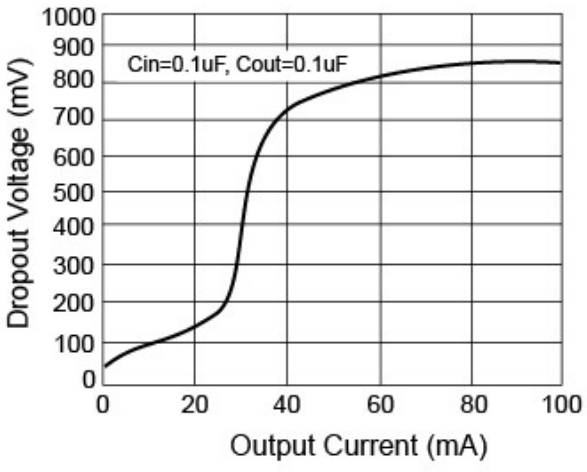

Figure 6. Dropout Voltage vs. Load Current

PACKAGE OUTLINE DIMENSIONS (Unit: Millimeters)

SOT-23

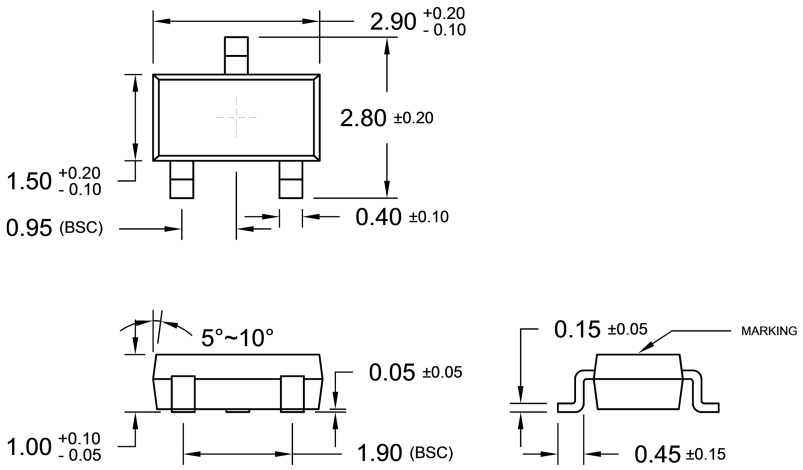

SUGGESTED PAD LAYOUT (Unit: Millimeters)

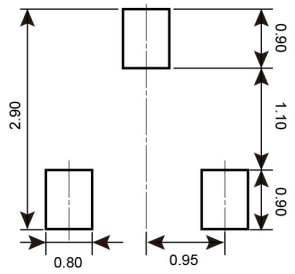

MARKING DIAGRAM

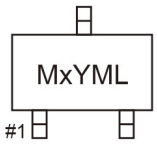

M = Device Code
x = Voltage Code (5=5V, S=3.3V)
Y = Year Code
M = Month Code for Halogen Free Product

O =Jan	**P** =Feb	**Q** =Mar	**R** =Apr
S =May	**T** =Jun	**U** =Jul	**V** =Aug
W =Sep	**X** =Oct	**Y** =Nov	**Z** =Dec

L = Lot Code (1~9, A~Z)

Notice

Specifications of the products displayed herein are subject to change without notice. TSC or anyone on its behalf, assumes no responsibility or liability for any errors or inaccuracies.

Information contained herein is intended to provide a product description only. No license, express or implied, to any intellectual property rights is granted by this document. Except as provided in TSC's terms and conditions of sale for such products, TSC assumes no liability whatsoever, and disclaims any express or implied warranty, relating to sale and/or use of TSC products including liability or warranties relating to fitness for a particular purpose, merchantability, or infringement of any patent, copyright, or other intellectual property right.

The products shown herein are not designed for use in medical, life-saving, or life-sustaining applications. Customers using or selling these products for use in such applications do so at their own risk and agree to fully indemnify TSC for any damages resulting from such improper use or sale.

ENTEGRECİ

Bu belge www.entegreci.com üzerinden sunulmaktadır.

Elektronik komponent tedarikinde Entegreci

Entegreci, Eskişehir merkezli, Türkiye geneline satış yapan bir elektronik komponent mağazasıdır. Entegreler (IC), mikrodenetleyiciler, transistörler, diyotlar, pasif elemanlar, konnektörler, modüller ve geliştirme kartları tek adetten seri üretim adetlerine kadar satılır. Ürün sayfalarında güncel stok durumunu, fiyatı ve datasheet bağlantısını bulabilirsiniz.

Parça koduyla arama

Üretici parça numarasını yazın; stok ve fiyatı hemen görün.

www.entegreci.com

Ürün kategorileri

Entegreden kapasitöre tüm elektronik komponent kategorileri.

Kategorilere göz atın

Üreticiler

Aradığınız üreticinin ürünlerini tek sayfada inceleyin.

Üreticileri görün

Toplu alım ve teklif

Listede olmayan ya da yüksek adetli parçalar için teklif isteyin.

Teklif isteyin

www.entegreci.com | **destek@entegreci.com** | **0850 305 90 34**

Entegreci is an online electronic components store based in Türkiye. Search by manufacturer part number to see stock, prices and datasheets for integrated circuits, microcontrollers, transistors, passive components and connectors, or request a quote for parts that are not listed.

Bu sayfa Entegreci tarafından eklenmiştir. Belgenin önceki sayfaları asıl yayıncısına aittir ve içeriği değiştirilmemiştir; en güncel sürüm için belgenin yayıncısına başvurun.