150mA Low Noise LDO Voltage Regulator with Enable Function

GENERAL DESCRIPTION

TS5205 is an efficient linear voltage regulator with ultra-low noise output, very low dropout voltage (typically 17mV at light loads and 165mV at 150mA), and very low power consumption (600μA at 100mA), providing high output current even when the application requires very low dropout voltage. The Chip Enable (EN) includes a CMOS or TTL compatible input allows the output to be turned off to prolong battery life. When shutdown, power consumption drops nearly to zero. TS5205 is included a precision voltage reference, error correction circuit, a current limited output driver, over temperature shutdown, revered battery protection and a reference bypass pin to improve its already excellent low-noise performance.

FEATURES

- Ultra Low Noise Output
- Output Current up to 150mA
- Low Dropout Voltage
- Low Power Consumption
- "Zero" Off-mode Current
- Logic Controlled Electronic Enable
- Internal Current Limit
- Thermal Shutdown Protection

APPLICATION

- Cellular Telephones
- Palmtops, Notebook Computers
- Battery Powered Equipment
- Consumer and Personal Electronics
- SMPS Post Regulator and DC to DC Modules
- High-efficiency Linear Power Supplies
- Portable Application

Pb-Free RoHS COMPLIANT HALOGEN FREE

SOT-25

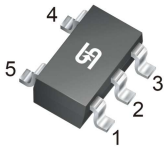

Pin Definition:

1. Input
2. Ground
3. Enable
4. Bypass / Adjust
5. Output

Notes: Moisture sensitivity level: level 3. Per J-STD-020

TYPICAL APPLICATION CIRCUIT

TS5205CX5xx Fixed Output Version

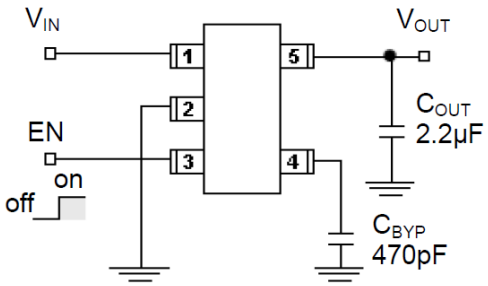

TS5205CX5 Adjustable Output Version

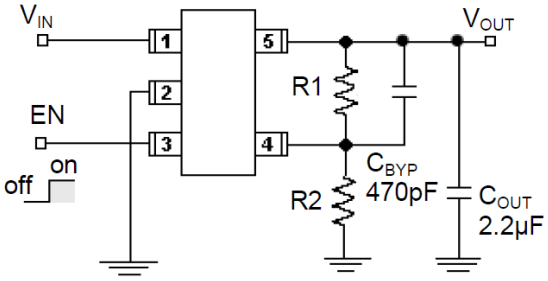

Adjustable Version: V_{OUT} = 1.24 (1+R2/R1)
(Adjustable output range up to 8V)

EN (pin3) may be connected directly to V_{IN} (pin 1) Low noise operation: C_{BYP} =470pF, C_{OUT} >2.2uF
Basic operation: C_{BYP} =not used, C_{OUT} >2.2uF

ABSOLUTE MAXIMUM RATINGS (T_A = 25°C unless otherwise noted) (Note 1)			
PARAMETER	**SYMBOL**	**LIMIT**	**UNIT**
Input Supply Voltage	V_{IN}	-20~ +20	V
Enable Input Voltage	V_{CE}	-20~ +20	V
Power Dissipation (Note 2)	P_D	Internal limited	
Operating Junction Temperature Range	T_J	-40 ~ +125	°C
Storage Temperature Range	T_{STG}	-65 ~ +150	°C
Lead Soldering Temperature (260°C)		5	S

THERMAL PERFORMANCE			
PARAMETER	**SYMBOL**	**Limit**	**UNIT**
Junction to Ambient Thermal Resistance	$R_{\Theta JA}$	220	°C/W

RECOMMEND OPERATING RATING (Note 2)			
PARAMETER	**SYMBOL**	**LIMIT**	**UNIT**
Input Supply Voltage	V_{IN}	+2.5 ~ +16	V
Enable Input Voltage	V_{CE}	0 ~ V_{IN}	V

ELECTRICAL SPECIFICATIONS

(V_{IN} =Vo+1V, Io=100μA, C_{OUT}=1μF, Vce≥2V,T_J = 25°C unless otherwise noted)

PARAMETER	**CONDITIONS**	**MIN**	**TYP**	**MAX**	**UNIT**
Output Voltage	V_{IN}=Vo + 1V	0.99|Vo|	V_{OUT}	1.01|Vo|	V
Output Voltage Temp. Coefficient	(Note 4)	--	40	--	ppm/°C
Line Regulation	Vo+1V ≤ V_{IN} ≤ 16V	--	0.005	0.05	%
Load Regulation (Note 5)	0.1mA ≤ Io ≤ 150mA	--	0.02	0.2	%
Dropout Voltage (Note 6)	Io=100uA	--	17	50	mV
	Io=50mA	--	110	150	
	Io=100mA	--	140	250	
	Io=150mA	--	165	275	
Ground Pin Current (Note 7)	Io=100uA	--	80	125	μA
	Io=50mA	--	350	600	
	Io=100mA	--	600	1000	
	Io=150mA	--	1300	1900	
Quiescent Current	V_{EN}≤0.4V (Shutdown)	--	0.01	1	μA
	V_{EN}≤0.18V (Shutdown)	--	--	5	
Output Current Limit	V_{OUT}=0V	--	300	500	mA
Power Supply Rejection Ratio	At f=100Hz, Io=100μA,	--	75	--	dB
Thermal Regulation (Note 8)		--	0.05	--	%/W
Output Noise	Io=50mA, C_{OUT}=2.2μF,	--	260	--	nV√Hz

ELECTRICAL SPECIFICATIONS

(V_{IN} =Vo+1V, Io=100μA, COUT=1μF, Vce≥2V,TA = 25°C unless otherwise noted)

PARAMETER	CONDITIONS	MIN	TYP	MAX	UNIT
Enable Function					
Enable Input Logic-Low Voltage	Regulation shutdown	--	--	0.4	V
Enable Input Logic-Low Voltage	Regulation enable	2.0	--	--	V
Enable input Current	V_{IL}≤ 0.4V	--	0.01	-1	μA
	V_{IH}≥ 2.0V	--	5	20	V

Note:

1. Exceeding the absolute maximum rating may damage the device.
2. The maximum allowable power dissipation at any T_A is $P_{D(MAX)} = [T_{J(MAX)} - Ta] + R_{\theta JA}$. Exceeding the maximum allowable power dissipation will result in excessive die temperature, and the regulator will go into thermal shutdown.
3. The device is not guaranteed to function outside its operating rating.
4. Output voltage temperature coefficient is defined as the worst case voltage change divided by the total temperature range.
5. Regulation is measured at constant junction temperature using low duty cycle pulse testing. Parts are tested for load regulation in the load range from 1mA to 150mA (5V version) and 1mA to 120mA (V_{OUT}<5V version). Changes in output voltage due to heating effects are covered by the thermal regulation specification.
6. Dropout voltage is defined as the input to output differential at which the output voltage drops 2% below its nominal value measured at 1V differential.
7. Ground pin current is the regulator quiescent current plus pass transistor base current. The total current drawn from the supply is the sum of the load current plus the ground pin current.
8. Thermal regulation is defined as the change in output voltage at a time “t” after a change in power dissipation is applied, excluding load or line regulation effects. Specifications are for a 150mA load pulse at V_{IN}=16V for t=10ms.

ORDERING INFORMATION

OUTPUT VOLTAGE	PART NO.	PACKAGE	PACKING
2.5V	TS5205CX525 RFG	SOT-25	3,000pcs / 7” Reel
3.3V	TS5205CX533 RFG	SOT-25	3,000pcs / 7” Reel
5.0V	TS5205CX550 RFG	SOT-25	3,000pcs / 7” Reel

Note:

1. Compliant to RoHS Directive 2011/65/EU and in accordance to WEEE 2002/96/EC.
2. Halogen-free according to IEC 61249-2-21 definition.

BLOCK DIAGRAMS

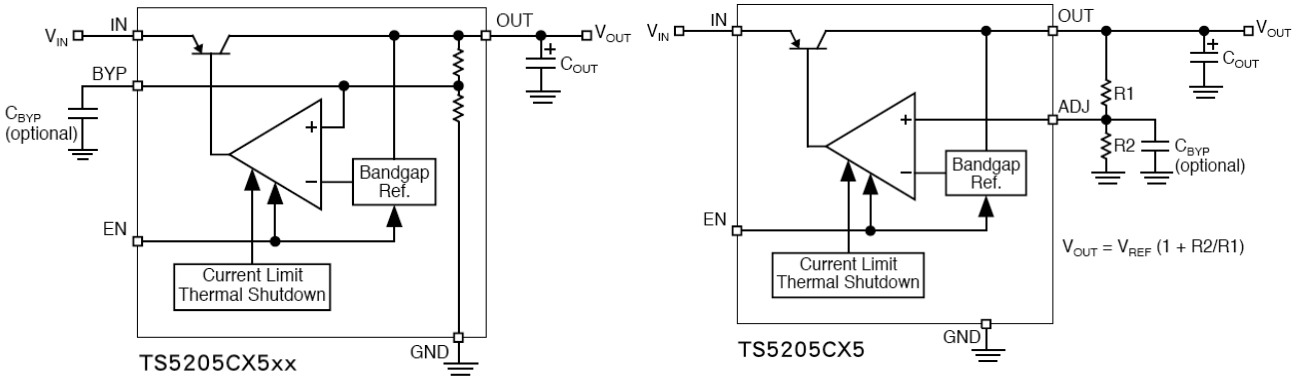

APPLICATION INFORMATION

Enable Input

TS5205 series feature an active-high (>2V) enable (EN) input that allows ON/OFF control of the regulator. Current drain reduces to “zero” when the device is shutdown, with only micro-amperes of leakage current. The EN is compatible with CMOS logic interfacing. EN may be directly tied to V_{IN} and pulled up to the maximum supply voltage.

Input Capacitor Requirement

An input capacitor of 0.1μF or greater is recommended when the device is more than 10” away from the bulk AC supply capacitance or when the supply is a battery.

Output Capacitor Requirement

The TS5205 series requires an output capacitor to maintain stability and improve transient response is necessary. 2.2μF minimum is recommended. Larger values improve the regulator’s transient response. The output capacitor value may be increased without limit. The output capacitor should have an ESR (effective series resistance) less than 5Ω and a resonant frequency above 1MHz. Ultra low ESR capacitors can cause a low amplitude oscillation on the output and/or under damped transient response. Most of tantalum or aluminum electrolytic capacitors are adequate; film types will work. Since many aluminum electrolytic have electrolytes that freeze at about –30°C, solid tantalums are recommended for operation below –25°C. At lower values of output current, less output capacitance is required for output stability. The capacitor can be reduced to 0.47μF for current below 10mA or 0.33μF for currents below 1mA.

No Load Stability

The TS5205 series will remain stable and in regulation with no load, unlike many other voltage regulators. This is especially important in CMOS RAM keep alive applications.

APPLICATION INFORMATION (CONTINUE)

Reference Bypass Capacitor

Bypass is connected to the internal voltage reference. A 470pF capacitor (C_{BYPASS}) connected from Bypass to Ground quiets this reference, providing a significant reduction in output noise. C_{BYPASS} reduces the regulator phase margin; when using C_{BYPASS}, output capacitors of 2.2μF or greater are generally required to maintain stability. The star up speed of the TS5205 is inversely proportional to the size of the reference bypass capacitor. Applications requiring a slow ramp up of output voltage should consider larger values of C_{BYPASS}. Likewise, if rapid turn on is necessary, consider omitting C_{BYPASS}. If output noise is not a major concern, omitted C_{BYPASS} and leave Bypass open.

Adjustable Regulator Design

The adjustable regulator versions can be adjusted to a specific output voltage by using two external resistors to programming the output voltage anywhere between 1.25V and the 8V maximum operating rating of the family.
Two resistors are used. Resistors can be quite large up to 470kΩ, because of the very high input impedance and low bias current of the sense comparator, the resistor values are calculated by:
A capacitor from Adjust to Ground provides greatly improved noise performance.

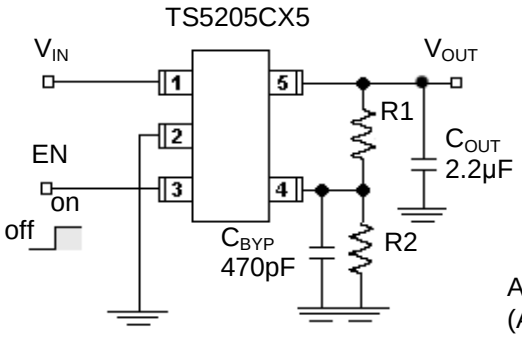

Adjustable Version: V_{OUT} = 1.24 (1+R2/R1)
(Adjustable output range up to 8V)

Dual Supply Operation

When used in dual supply systems where the regulator load is returned to a negative supply, the output voltage must be diode clamped to ground.

Thermal Characteristics

TS5205 series is designed to provide 150mA (5V version) of continuous current in a very small package. Maximum power dissipation can be calculated based on the output current and the voltage drop across the part. To determine the maximum power dissipation of the package, use the junction-ambient thermal resistance of the device and the following basic equation:

$$P_{D(MAX)} = [\ T_{J(MAX)} - T_A\ ] / \Theta_{JA}$$

$T_{J(MAX)}$ is the maximum junction temperature of the die(125°C), and Ta is the ambient operating temperature. Θ_{JA} is layout dependent, the actual power dissipation of the regulator circuit can be determined using the equation:

$$P_D = (V_{IN} - V_{OUT}) * I_{OUT} + V_{IN} * I_{GND}$$

Substituting $P_{D(MAX)}$ for P_D and solving for the operating conditions that are critical to the application will give the maximum operating conditions for the regulator circuit. For example, when operating the TS5205CX33 at room temperature with a minimum footprint layout, the maximum input voltage for a set output current can be determined as follows:

$$P_{D(MAX)} = (125^oC - 25^oC) / 220^oC/W$$

$$P_{D(MAX)} = 455mW$$

APPLICATION INFORMATION (CONTINUE)

Thermal Characteristics

The junction to ambient thermal resistance for the minimum footprint is 220°C/W, the maximum power dissipation must not be exceeded for proper operation. Using the output voltage of 3.3V and an output current of 120mA, the maximum input voltage can be determined. From the electrical characteristics table, the maximum ground current for 120mA output current is 2.5mA.

445mW = (V_{IN} – 3.3V) * 150mA + V_{IN} * 2.5mA
445mW = V_{IN} * 150mA – 3.3 * 150mA + V_{IN} * 2.5mA
445mW = V_{IN} * 150mA – 495mW + V_{IN} * 2.5mA
950mW = V_{IN} * 152.5mA
V_{IN}(max) = 6.23V

Therefore, a 3.3V application at 150mA of output current can accept a maximum input voltage of 6.23V in a SOT-25 package.

Fixed Output Regulator Design

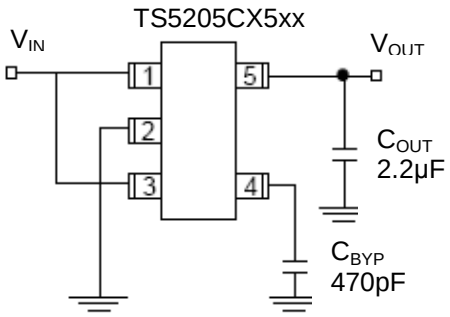

Ultra Low Noise Fixed Voltage Application

Includes a 470pF capacitor for low noise operation and shows EN connected to IN for an application where enable/shutdown is not required. C_{OUT}= 2.2µF minimum.

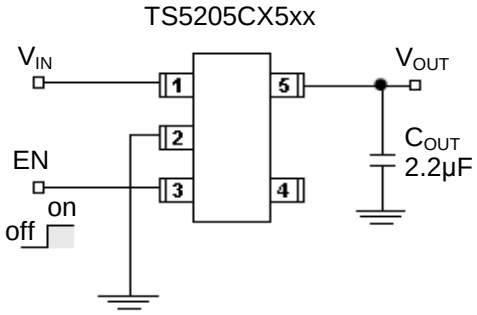

Low Noise Fixed Voltage Application

An example of a low noise configuration where bypass is not required. C_{OUT}= 2.2µF minimum

PACKAGE OUTLINE DIMENSIONS (Unit: Millimeters)

SOT-25

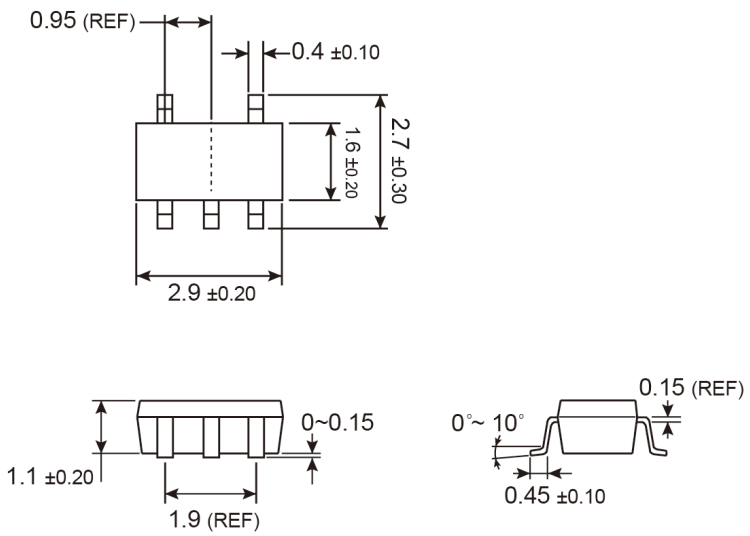

SUGGESTED PAD LAYOUT (Unit: Millimeters)

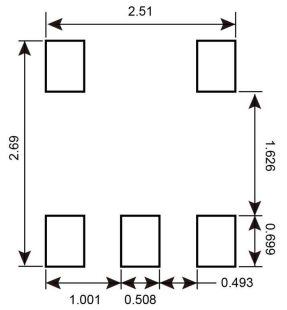

MARKING DIAGRAM

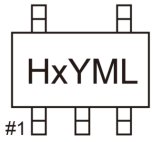

H = Device Code
X = Voltage Code
5 =5.0V **S** =3.3V **K** =2.5V **0** =Adj
Y = Year Code
M = Month Code for Halogen Free Product
O =Jan **P** =Feb **Q** =Mar **R** =Apr
S =May **T** =Jun **U** =Jul **V** =Aug
W =Sep **X** =Oct **Y** =Nov **Z** =Dec
L = Lot Code (1~9, A~Z)

Notice

Specifications of the products displayed herein are subject to change without notice. TSC or anyone on its behalf, assumes no responsibility or liability for any errors or inaccuracies.

Information contained herein is intended to provide a product description only. No license, express or implied, to any intellectual property rights is granted by this document. Except as provided in TSC's terms and conditions of sale for such products, TSC assumes no liability whatsoever, and disclaims any express or implied warranty, relating to sale and/or use of TSC products including liability or warranties relating to fitness for a particular purpose, merchantability, or infringement of any patent, copyright, or other intellectual property right.

The products shown herein are not designed for use in medical, life-saving, or life-sustaining applications. Customers using or selling these products for use in such applications do so at their own risk and agree to fully indemnify TSC for any damages resulting from such improper use or sale.

ENTEGRECİ

Bu belge www.entegreci.com üzerinden sunulmaktadır.

Elektronik komponent tedarikinde Entegreci

Entegreci, Eskişehir merkezli, Türkiye geneline satış yapan bir elektronik komponent mağazasıdır. Entegreler (IC), mikrodenetleyiciler, transistörler, diyotlar, pasif elemanlar, konnektörler, modüller ve geliştirme kartları tek adetten seri üretim adetlerine kadar satılır. Ürün sayfalarında güncel stok durumunu, fiyatı ve datasheet bağlantısını bulabilirsiniz.

Parça koduyla arama

Üretici parça numarasını yazın; stok ve fiyatı hemen görün.

www.entegreci.com

Ürün kategorileri

Entegreden kapasitöre tüm elektronik komponent kategorileri.

Kategorilere göz atın

Üreticiler

Aradığınız üreticinin ürünlerini tek sayfada inceleyin.

Üreticileri görün

Toplu alım ve teklif

Listede olmayan ya da yüksek adetli parçalar için teklif isteyin.

Teklif isteyin

www.entegreci.com | **destek@entegreci.com** | **0850 305 90 34**

Entegreci is an online electronic components store based in Türkiye. Search by manufacturer part number to see stock, prices and datasheets for integrated circuits, microcontrollers, transistors, passive components and connectors, or request a quote for parts that are not listed.

Bu sayfa Entegreci tarafından eklenmiştir. Belgenin önceki sayfaları asıl yayıncısına aittir ve içeriği değiştirilmemiştir; en güncel sürüm için belgenin yayıncısına başvurun.