80mA Low Noise LDO Voltage Regulator with Enable Function

DESCRIPTION

TS5213 is an efficient linear voltage regulator with ultra-low noise output, very low dropout voltage (typically 50mV at light loads and 320mV at 80mA), and very low ground current (225uA at 20mA), providing high output current even when the application requires very low dropout voltage. The Chip Enable (EN) includes a CMOS or TTL compatible input allows the output to be turned off to prolong battery life. When shutdown, power consumption drops nearly to zero. TS5213 is included a precision voltage reference, error correction circuit, a current limited output driver, over temperature shutdown and revered battery protection.

FEATURES

- Ultra Low Noise Output
- Output Current up to 80mA
- Low Power Consumption
- “Zero” Off-mode Consumption
- Logic Controlled Electronic Enable
- Current Limit & Thermal Shutdown Protection
- RoHS Compliant
- Halogen-Free according to IEC 61249-2-21

APPLICATION

- Cellular Telephones
- Palmtops, Notebook Computers
- Battery Powered Equipment
- SMPS Post Regulator and DC to DC Modules
- High-efficiency Linear Power Supplies
- Portable Application

Pb-Free RoHS COMPLIANT HALOGEN FREE

SOT-25

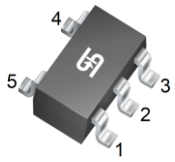

Pin Definition:

1. Input
2. Ground
3. Enable
4. N/C
5. Output

Notes: MSL 1 (Moisture Sensitivity Level) per J-STD-020

TYPICAL APPLICATION CIRCUIT

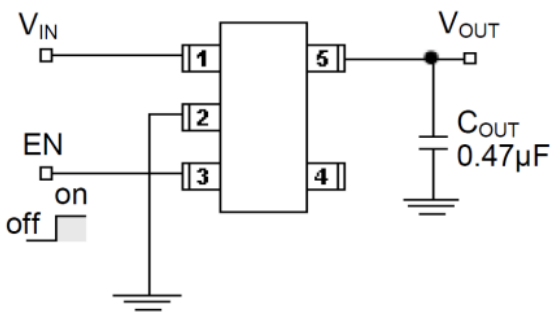

EN may be connected to VIN pin to regulation ON
CIN > 0.1μF in basic operating
COUT > 0.47μF in low noise operating

ABSOLUTE MAXIMUM RATINGS (T_A = 25°C unless otherwise noted) (Note 1)			
PARAMETER	**SYMBOL**	**LIMIT**	**UNIT**
Input Supply Voltage	V_{IN}	-20~ +20	V
Enable Input Voltage	V_{CE}	-20~ +20	V
Power Dissipation (Note 2)	P_D	Internal limited	
Junction to Ambient Thermal Resistance	$R_{\Theta JA}$	220	°C/W
Operating Junction Temperature Range	T_J	-40 ~ +125	°C
Storage Temperature Range	T_{STG}	-65 ~ +150	°C
Lead Soldering Temperature (260°C)		5	S

RECOMMEND OPERATING RATING (Note 2)			
PARAMETER	**SYMBOL**	**LIMIT**	**UNIT**
Input Supply Voltage	V_{IN}	+2.5 ~ +16	V
Enable Input Voltage	V_{CE}	0 ~ V_{IN}	V

ELECTRICAL SPECIFICATIONS

(V_{IN} = Vo+1V, Io = 100μA, C_{OUT} = 1uF, Vce ≥ 2V, T_A = 25°C unless otherwise noted)

PARAMETER	**CONDITIONS**		**MIN**	**TYP**	**MAX**	**UNIT**
Output Voltage	V_{IN} = Vo + 1V		-3	--	3	%
	-40°C ≤ T_J ≤ +125°C		-4	--	4	
Output Voltage Temp. Coefficient	(Note 5)		--	50	200	ppm/°C
Line Regulation	Vo+1V ≤ V_{IN} ≤ 16V		--	0.008	0.3	%
Load Regulation (Note 6)	0.1mA ≤ Io ≤ 80mA		--	0.08	0.3	%
Dropout Voltage (Note 7)	I_O = 100μA		--	50	--	mV
	I_O = 20mA		--	230	300	
	I_O = 50mA		--	280	370	
	I_O = 80mA		--	320	420	
Quiescent Current	V_{EN} ≤ 0.4V (shutdown)		--	0.01	10	μA
Ground Pin Current (Note 8)	V_{EN} ≥ 2V (active)	I_O = 100μA	--	80	--	μA
		I_O = 20mA	--	225	750	
		I_O = 50mA	--	850	--	
		I_O = 80mA	--	1800	3000	
Output Current Limit	V_{OUT} =0V		--	250	500	mA
Power Supply Rejection Ratio	At f=100Hz, Io=100μA,		--	65	--	dB
Thermal Regulation (Note 9)			--	0.05	--	%/W

ENABLE FUNCTION (V_{IN} = Vo+1V, Io = 100μA, C_{OUT} = 1uF, Vce ≥ 2V, T_A = 25°C unless otherwise noted)					
PARAMETER	**CONDITIONS**	**MIN**	**TYP**	**MAX**	**UNIT**
Enable Input Logic-Low Voltage	Regulation shutdown	--	--	0.6	V
Enable Input Logic-High Voltage	Regulation enable	2.0	--	--	V
Enable Input Current	$V_{IL} \leq 0.6V$	--	0.01	1	μA
	$V_{IH} \geq 2.0V$	--	15	50	V

Note:

1. Exceeding the absolute maximum rating may damage the device.
2. The maximum allowable power dissipation at any Ta is Pd(max) = [T_J(MAX) - T_A] + Θ_{JA}. Exceeding the maximum allowable power dissipation will result in excessive die temperature, and the regulator will go into thermal shutdown.
3. Devices are ESD sensitive. Handling precautions recommended.
4. The device is not guaranteed to function outside its operating rating.
5. Output voltage temperature coefficient is defined as the worst-case voltage change divided by the total temperature range.
6. Regulation is measured at constant junction temperature using low duty cycle pulse testing. Parts are tested for load regulation in the load range from 1mA to 80mA. Changes in output voltage due to heating effects are covered by the thermal regulation specification.
7. Dropout voltage is defined as the input to output differential at which the output voltage drops 2% below its nominal value measured at 1V differential.
8. Ground pin current is the regulator quiescent current plus pass transistor base current. The total current drawn from the supply is the sum of the load current plus the ground pin current.
9. Thermal regulation is defined as the change in output voltage at a time "t" after a change in power dissipation is applied, excluding load or line regulation effects. Specifications are for a 80mA load pulse at V_{IH} =16V for t=10ms.

ORDERING INFORMATION

OUTPUT VOLTAGE	ORDERING CODE	PACKAGE	PACKING
3.3V	TS5213CX533 RFG	SOT-25	3,000pcs / 7" Reel
5V	TS5213CX550 RFG	SOT-25	3,000pcs / 7" Reel

BLOCK DIAGRAM

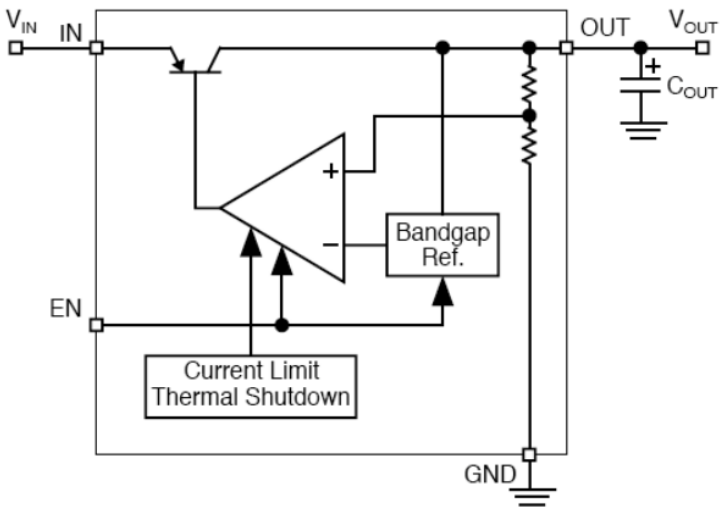

APPLICATION INFORMATION

Enable Input

TS5213 series feature an active-high (>2V) enable (EN) input that allows ON/OFF control of the regulator. Current drain reduces to “zero” when the device is shutdown, with only micro-amperes of leakage current. The EN is compatible with CMOS logic interfacing. EN may be directly tied to V_{IH} and pulled up to the maximum supply voltage.

Input Capacitor Requirement

An input capacitor of 0.17μF or greater is recommended when the device is more than 10” away from the bulk AC supply capacitance or when the supply is a battery.

Output Capacitor Requirement

The TS5213 series requires an output capacitor to maintain stability and improve transient response is necessary. The TS5213 is ultra-stable, requiring only 0.47μF of output capacitance for stability. It is stable with all type of capacitors, including the tiny, low-ESR ceramic chip capacitors. The output capacitor value may be increased without limit.

No Load Stability

The TS5213 series will remain stable and in regulation with no load, unlike many other voltage regulators. This is especially important in CMOS RAM keep alive applications.

Thermal Characteristics

TS5213 series is designed to provide 80mA of continuous current in a very small package. Maximum power dissipation can be calculated based on the output current and the voltage drop across the part. To determine the maximum power dissipation of the package, use the junction-ambient thermal resistance of the device and the following basic equation:

$$P_{D(MAX)} = [\ T_{J(MAX)} - T_A\ ] / \Theta_{JA}$$

$T_{J(MAX)}$ is the maximum junction temperature of the die(125°C), and Ta is the ambient operating temperature. Θ_{JA} is layout dependent, the actual power dissipation of the regulator circuit can be determined using the equation:

$$P_D = (V_{IN} - V_{OUT}) * I_{OUT} + V_{IN} * I_{GND}$$

Substituting Pd(max) for Pd and solving for the operating conditions that are critical to the application will give the maximum operating conditions for the regulator circuit. For example, when operating the TS5213CX550 at room temperature with a minimum footprint layout, the maximum input voltage for a set output current can be determined as follows:

$$P_{D(MAX)} = (125^oC - 25^oC) / 220^oC/W$$
$$P_{D(MAX)} = 455mW$$

The junction to ambient thermal resistance for the minimum footprint is 220ºC/W, the maximum power dissipation must not be exceeded for proper operation. Using the output voltage of 5.0V and an output current of 80mA, the maximum input voltage can be determined. Form the electrical characteristics table, the maximum ground current for 80mA output current is 1mA.

$$445mW = (V_{IN} - 5.0V) * 80mA + V_{IN} * 1.8mA$$
$$445mW = V_{IN} * 80mA - 5.0 * 80mA + V_{IN} * 1.8mA$$
$$445mW = V_{IN} * 80mA - 400mW + V_{IN} * 1.8mA$$
$$845mW = V_{IN} * 81.8mA$$
$$V_{IN}\ (max) = 10.33V$$

Therefore, a 5.0V application at 80mA of output current can accept a maximum input voltage of 10.33V in a SOT-25 package.

ELECTRICAL CHARACTERISTICS CURVE

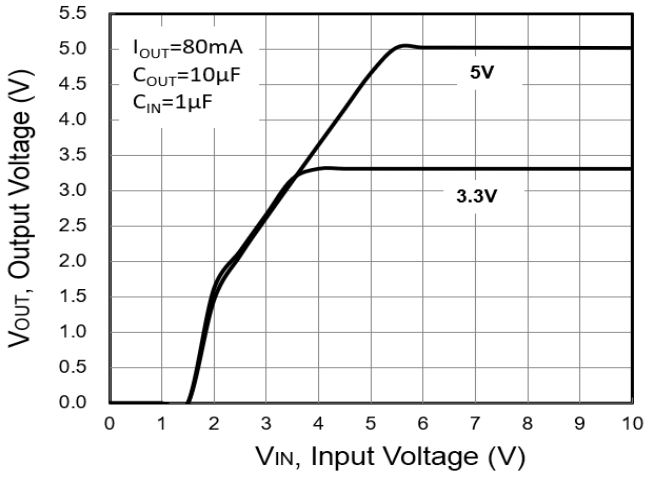

Figure 1. Output Voltage vs. Input Voltage

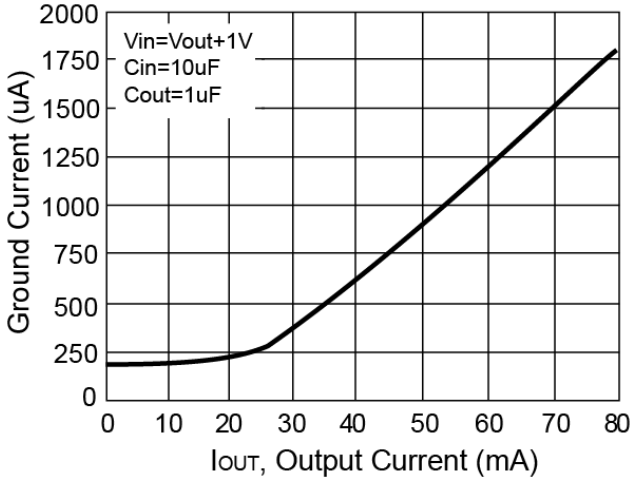

Figure 2. Ground Current vs. Output Current

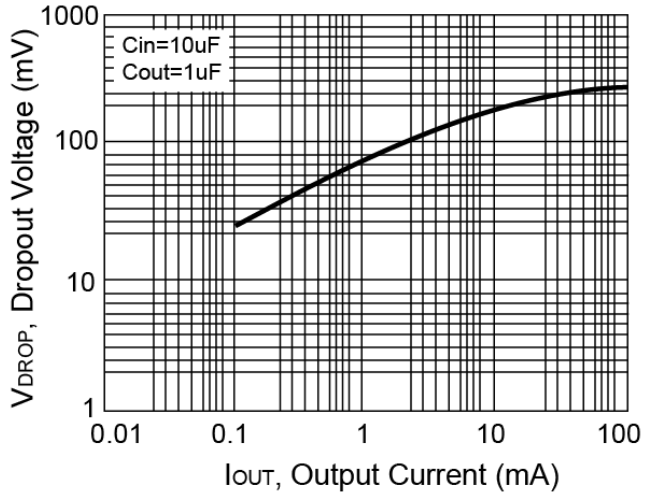

Figure 3. Dropout Voltage vs. Output Current

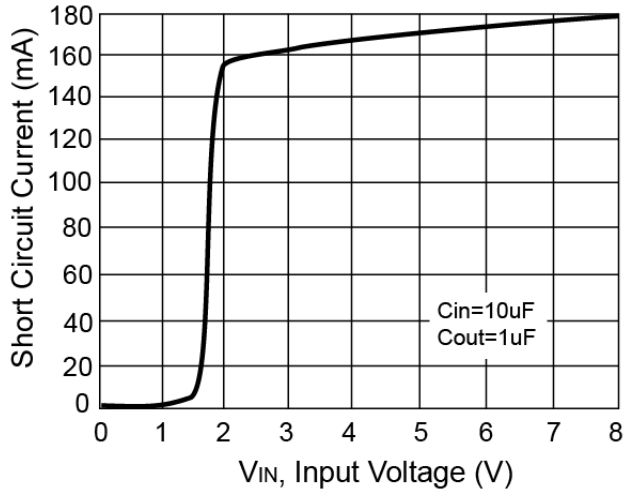

Figure 4. Short Circuit Current vs. Input Voltage

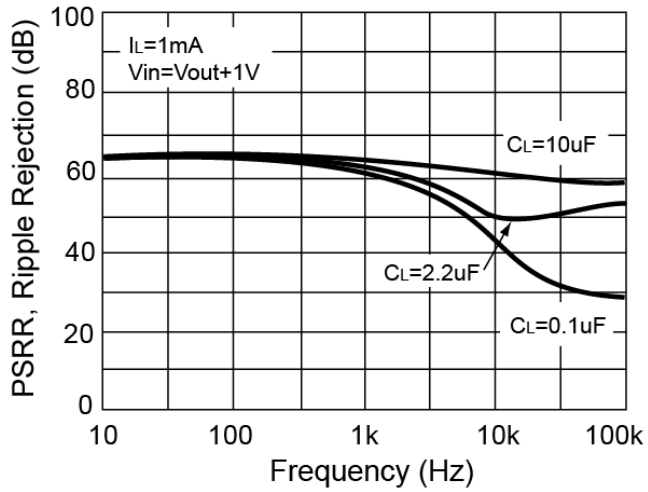

Figure 5. Ripple Rejection vs. Frequency

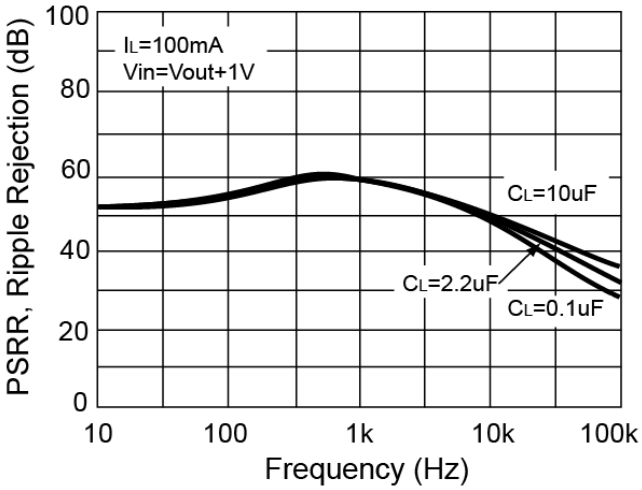

Figure 6. Ripple Rejection vs. Frequency

PACKAGE OUTLINE DIMENSIONS

SOT-25

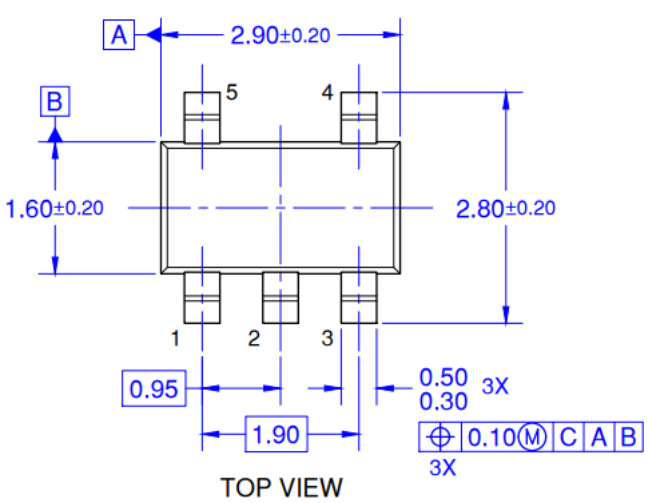

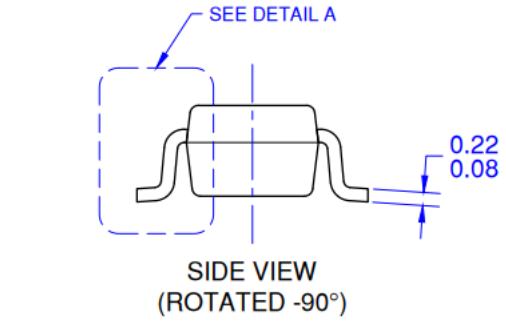

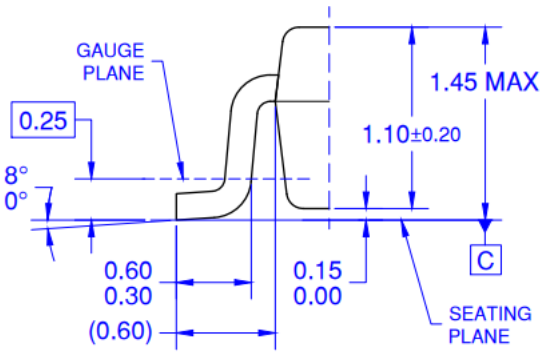

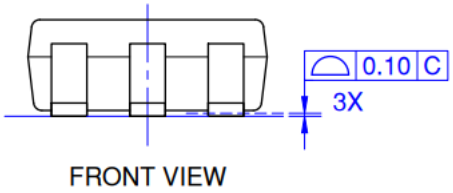

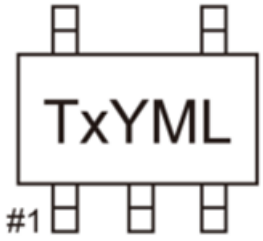

MARKING DIAGRAM

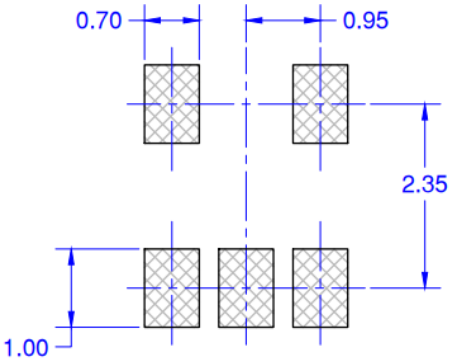

SUGGESTED PAD LAYOUT

T = Device code

X = Voltage code (5=5V, S=3.3V)

Y = Year code

M = Month Code for Halogen Free Product

O	=Jan	**P**	=Feb	**Q**	=Mar	**R**	=Apr
S	=May	**T**	=Jun	**U**	=Jul	**V**	=Aug
W	=Sep	**X**	=Oct	**Y**	=Nov	**Z**	=Dec

L = Lot code (1~9, A~Z)

NOTES: UNLESS OTHERWISE SPECIFIED

1. ALL DIMENSIONS ARE IN MILLIMETERS.
2. DIMENSIONING AND TOLERANCING PER ASME Y14.5M-1994.
3. PACKAGE OUTLINE REFERENCE: JEDEC MO-178, VARIATION AA.
4. MOLDED PLASTIC BODY DIMENSIONS DO NOT INCLUDE MOLD FLASH, PROTRUSIONS OR GATE BURRS.
5. DWG NO REF: HQ2SD07-026 REV A.

Notice

Specifications of the products displayed herein are subject to change without notice. TSC or anyone on its behalf, assumes no responsibility or liability for any errors or inaccuracies.

Purchasers are solely responsible for the choice, selection, and use of TSC products and TSC assumes no liability for application assistance or the design of Purchasers' products.

Information contained herein is intended to provide a product description only. No license, express or implied, to any intellectual property rights is granted by this document. Except as provided in TSC's terms and conditions of sale for such products, TSC assumes no liability whatsoever, and disclaims any express or implied warranty, relating to sale and/or use of TSC products including liability or warranties relating to fitness for a particular purpose, merchantability, or infringement of any patent, copyright, or other intellectual property right.

The products shown herein are not designed for use in medical, life-saving, or life-sustaining applications. Customers using or selling these products for use in such applications do so at their own risk and agree to fully indemnify TSC for any damages resulting from such improper use or sale.

ENTEGRECİ

Bu belge www.entegreci.com üzerinden sunulmaktadır.

Elektronik komponent tedarikinde Entegreci

Entegreci, Eskişehir merkezli, Türkiye geneline satış yapan bir elektronik komponent mağazasıdır. Entegreler (IC), mikrodenetleyiciler, transistörler, diyotlar, pasif elemanlar, konnektörler, modüller ve geliştirme kartları tek adetten seri üretim adetlerine kadar satılır. Ürün sayfalarında güncel stok durumunu, fiyatı ve datasheet bağlantısını bulabilirsiniz.

Parça koduyla arama

Üretici parça numarasını yazın; stok ve fiyatı hemen görün.

www.entegreci.com

Ürün kategorileri

Entegreden kapasitöre tüm elektronik komponent kategorileri.

Kategorilere göz atın

Üreticiler

Aradığınız üreticinin ürünlerini tek sayfada inceleyin.

Üreticileri görün

Toplu alım ve teklif

Listede olmayan ya da yüksek adetli parçalar için teklif isteyin.

Teklif isteyin

www.entegreci.com | **destek@entegreci.com** | **0850 305 90 34**

Entegreci is an online electronic components store based in Türkiye. Search by manufacturer part number to see stock, prices and datasheets for integrated circuits, microcontrollers, transistors, passive components and connectors, or request a quote for parts that are not listed.

Bu sayfa Entegreci tarafından eklenmiştir. Belgenin önceki sayfaları asıl yayıncısına aittir ve içeriği değiştirilmemiştir; en güncel sürüm için belgenin yayıncısına başvurun.