AUTOMOTIVE COMPLIANT 1A LOW-DROPOUT POSITIVE REGULATOR WITH FIXED AND ADJUSTABLE OUTPUTS

Description

The ZLDO1117Q is a low-dropout positive adjustable or fixed-mode regulator with 1A output current capability. The ZLDO1117Q has a 2% tolerance across the industrial temperature range and is guaranteed to have lower than 1.2V dropout at full load current making it ideal to provide well-regulated outputs of 1.2V to 5.0V with input supply voltages up to 18V.

The ZLDO1117Q is ideally suited to provide well-regulated supplies for low-voltage IC applications such as high-speed bus termination and low-current 3.3V logic supply across the whole industrial temperature range.

The ZLDO1117Q has been qualified to AEC-Q100 Grade 2 and is automotive compliant supporting PPAPs.

Features

- 1.2V Maximum Dropout at Full Load Current
- 2% Tolerance Overtemperature, Line and Load Variations
- Fast Transient Response
- Output Current Limiting
- Built-in Thermal Shutdown
- Good Noise Rejection
- Suitable for Use with MLCC Capacitors
- -40°C to +105°C Ambient Temperature Range
- Available in TO252 (DPAK) and SOT223 with “Green” Molding Compound (No Br, Sb)
- **Totally Lead-Free & Fully RoHS Compliant (Notes 1 & 2)**
- **Halogen and Antimony Free. “Green” Device (Note 3)**
- **The ZLDO1117Q is suitable for automotive applications requiring specific change control; this part is AEC-Q100 qualified, PPAP capable, and manufactured in IATF16949 certified facilities.**
  https://www.diodes.com/quality/product-definitions/

Pin Assignments

(Top View)

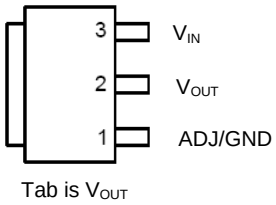

SOT223

(Top View)

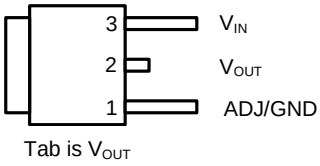

TO252 (DPAK)

Notes:
1. No purposely added lead. Fully EU Directive 2002/95/EC (RoHS), 2011/65/EU (RoHS 2) & 2015/863/EU (RoHS 3) compliant.
2. See https://www.diodes.com/quality/lead-free/ for more information about Diodes Incorporated’s definitions of Halogen- and Antimony-free, "Green" and Lead-free.
3. Halogen- and Antimony-free "Green” products are defined as those which contain <900ppm bromine, <900ppm chlorine (<1500ppm total Br + Cl) and <1000ppm antimony compounds.

Typical Applications Circuit

1A I/O – 1.8V Core Regulator

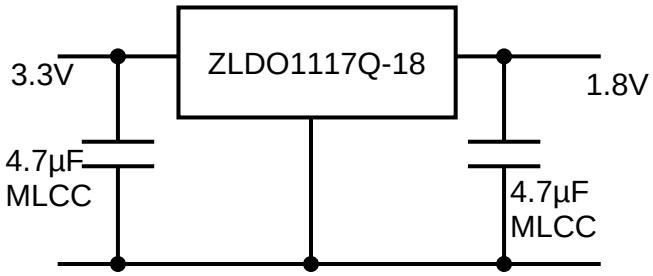

© 2025 Copyright Diodes Incorporated. All Rights Reserved.

Pin Descriptions

Pin Name	I/O	Pin Number	Function
ADJ/GND	I	1	A resistor divider from this pin to the V_{OUT} pin and ground sets the output voltage (Ground only for Fixed-Mode).
V_{OUT}	O	2	The output of the regulator. A minimum of 4.7µF capacitor (0.05Ω ≤ ESR ≤ 0.5Ω) must be connected from this pin to ground to ensure stability. For improved AC load response, a larger output capacitor is recommended.
V_{IN}	I	3	The input pin of regulator. Typically a large storage capacitor (0.05Ω ≤ ESR ≤ 0.5Ω) is connected from this pin to ground to ensure that the input voltage does not sag below the minimum dropout voltage during the load transient response. This pin must always be 1.3V higher than V_{OUT} in order for the device to regulate properly.

Absolute Maximum Ratings (Note 4) (Unless otherwise stated voltages specified are relative to the ADJ/GND pin.)

Symbol	Parameter	Rating	Unit
V_{IN}	Input Supply Voltage (Relative to Ground)	-0.03 to +18	V
T_J	Junction Temperature	+150	°C
—	Power Dissipation	See SOA Curve	—
T_{ST}	Storage Temperature	-65 to +150	°C
ESD Susceptibility			
HBM	Human Body Model	4000	V
MM	Machine Model	400	V
CDM	Charged Device Model	1000	V

Note: 4. Stresses greater than those listed under *Absolute Maximum Ratings* can cause permanent damage to the device. These are stress ratings only, and functional operation of the device at these or any other conditions beyond those indicated under *Recommended Operating Conditions* is not implied. Exposure to *Absolute Maximum Ratings* for extended periods can affect device reliability.

Semiconductor devices are ESD sensitive and may be damaged by exposure to ESD events. Suitable ESD precautions should be taken when handling and transporting these devices.

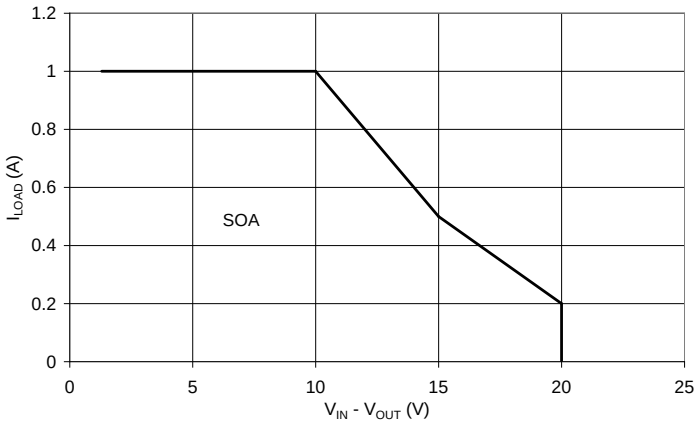

Safe Operation Area (SOA) Curve

© 2025 Copyright Diodes Incorporated. All Rights Reserved.

Recommended Operating Conditions

Symbol	Parameter	Min	Max	Unit
V_{IN}	Input Voltage	2.7 (Note 5)	18	V
I_O	Output Current	0.01	1	A
T_J	Operating Junction Temperature Range (Notes 6, 7)	-40	+125	°C
T_A	Operating Ambient Temperature Range (Notes 7, 8)	-40	+105	°C

Package Thermal Data

Thermal Resistance	Package	Rating	Unit
Junction-to-Ambient, θ_{JA}	SOT223 (Note 9) TO252 (DPAK) (Note 10)	107 73	°C/W
Junction-to-Case, θ_{JC}	SOT223 (Note 9) TO252 (DPAK) (Note 10)	16 12	°C/W

Notes:
5. To ensure correct operation without entering dropout V_{IN} must be 1.5V greater than output voltage. Device will continue to operate below this minimum input voltage under dropout conditions.
6. ZLDO1117Q contains an internal thermal limiting circuit that is designed to protect the regulator in the event that the maximum junction temperature is exceeded. When activated, typically at +150°C, the regulator output switches off and then back on as the die cools.
7. The maximum power dissipation is a function of $T_{J(max)}$, θ_{JA} and T_A. The maximum allowable power dissipation at any ambient temperature is $P_D = (T_{J(max)} – T_A) / \theta_{JA}$.
8. ZLDO1117Q was qualified to AEC-Q100 over the -40°C to +105°C ambient temperature range.
9. Test condition for SOT223: T_A = +27°C, no air flow, device mounted on 2” x 2” polyimide PCB, 2oz copper, 5.6mm x 5.6mm pad.
10. Test condition for TO252 (DPAK): T_A = +27°C, no air flow, device mounted on 2” x 2” polyimide PCB, 1oz copper, 2cm x 2cm pad.

© 2025 Copyright Diodes Incorporated. All Rights Reserved.

Electrical Characteristics (T_J = +25°C, unless otherwise specified. FT = -40°C ≤ T_J ≤ +125°C. Pulse tested with T_A = T_J)

Parameter	Conditions		T_J (°C)	Min	Typ	Max	Unit
Reference Voltage	ZLDO1117Q-ADJ	(V_{IN} - V_{OUT}) = 2V, I_O = 10mA	+25	1.238	1.250	1.263	V
		V_{OUT} + 1.4V < V_{IN} < 10V, 10mA < I_O < 1A	FT	1.225	—	1.275	
Output Voltage	ZLDO1117Q-12	I_O = 10mA, V_{IN} = 3.2V	+25	1.188	1.200	1.212	V
		10mA < I_O < 1A, 2.7V < V_{IN} < 12V	FT	1.176	—	1.224	
	ZLDO1117Q-15	I_O = 10mA, V_{IN} = 3.5V	+25	1.485	1.500	1.515	V
		0 < I_O < 1A, 2.9V < V_{IN} < 12V	FT	1.470	—	1.530	
	ZLDO1117Q-18	I_O = 10mA, V_{IN} = 3.8V	+25	1.782	1.800	1.818	V
		0 < I_O < 1A, 3.2V < V_{IN} < 12V	FT	1.764	—	1.836	
	ZLDO1117Q-25	I_O = 10mA, V_{IN} = 4.5V	+25	2.475	2.500	2.525	V
		0 < I_O < 1A, 3.9V < V_{IN} < 12V	FT	2.450	—	2.550	
	ZLDO1117Q-33	I_O = 10mA, V_{IN} = 5.3V	+25	3.267	3.300	3.333	V
		0 < I_O < 1A, 4.7V < V_{IN} < 12V	FT	3.235	—	3.365	
	ZLDO1117Q-50	I_O = 10mA, V_{IN} = 7V	+25	4.95	5.000	5.05	V
		0 < I_O < 1A, 6.4V < V_{IN} < 12V	FT	4.900	—	5.100	
Line Regulation	ZLDO1117Q-ADJ ZLDO1117Q-12	I_O = 10mA, V_{OUT} + 1.5V < V_{IN} < 12V	+25	—	—	0.1	%
			FT	—	—	0.2	
	ZLDO1117Q-xx	I_O = 0mA, V_{OUT} + 1.5V < V_{IN} < 12V	+25	—	—	0.1	%
			FT	—	—	0.2	
Load Regulation (Notes 11, 12)	ZLDO1117Q-ADJ	V_{IN} = 3.3V, V_{ADJ} = 0, 10mA < I_O < 1A	+25	—	—	0.2	%
			FT	—	—	0.4	
	ZLDO1117Q-12	V_{IN} = 2.7V, 10mA < I_O < 1A	+25	—	—	0.2	%
			FT	—	—	0.4	
	ZLDO1117Q-15	V_{IN} = 3V, 0 < I_O < 1A	+25	—	—	3	mV
			FT	—	—	6	
	ZLDO1117Q-18	V_{IN} = 3.3V, 0 < I_O < 1A	+25	—	—	4	mV
			FT	—	—	8	
	ZLDO1117Q-25	V_{IN} = 4V, 0 < I_O < 1A	+25	—	—	5	mV
			FT	—	—	10	
	ZLDO1117Q-33	V_{IN} = 4.8V, 0 < I_O < 1A	+25	—	—	6.6	mV
			FT	—	—	13	
	ZLDO1117Q-50	V_{IN} = 6.5V, 0 < I_O < 1A	+25	—	—	10	mV
			FT	—	—	20	
Dropout Voltage (V_{IN} - V_{OUT})	ZLDO1117Q-ADJ/12/ 15/18/25/33/50	I_O = 1A, ΔV_{OUT} = 1%V_{OUT}	+25	—	1.11	1.2	V
Current Limit	ZLDO1117Q-ADJ/12/ 15/18/25/33/50	(V_{IN} - V_{OUT}) = 5V	+25	—	—	—	A
			FT	1. 1	—	—	
Minimum Load Current (Note 13)	ZLDO1117Q-ADJ ZLDO1117Q-12	V_{IN} = < 18V	FT	—	2	5	mA
Quiescent Current	ZLDO1117Q-xx	V_{IN} < 18V, I_O = 0mA	FT	—	4	10	mA
GND Current	ZLDO1117Q-ADJ ZLDO1117Q-12	V_{IN} = 7V	FT	—	35	120	µA
Thermal Regulation	—	30ms pulse	+25	—	—	0.1	%/W
Ripple Rejection	ZLDO1117Q-xx	V_{IN} = V_{OUT} + 3V, f = 120Hz C_{OUT} = 25µF Tantalum, I_{OUT} = 100mA	+25	60	80	—	dB
Temperature Stability	—	I_O = 10mA	—	—	0.5	—	%

Notes:
11. See thermal regulation specifications for changes in output voltage due to heating effects. Line and load regulation are measured at a constant junction temperature by low duty cycle pulse testing. Load regulation is measured at the output lead = 1/18" from the package.
12. Line and load regulation are guaranteed up to the maximum power dissipation of 15W. Power dissipation is determined by the difference between input and output differential and the output current. Guaranteed maximum power dissipation will not be available over the full input/output range.
13. The minimum load current is defined as the minimum output current required to maintain voltage regulation. This output current can be made up of either load current itself and/or the current delivered to the output voltage setting feedback resistors.

© 2025 Copyright Diodes Incorporated. All Rights Reserved.

Typical Characteristics

Output Voltage Variation vs. Temperature

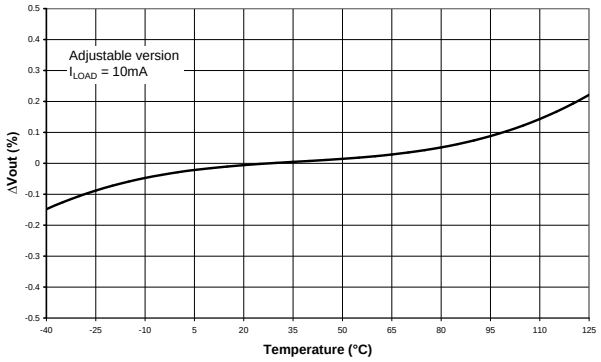

Line Regulation vs. Temperature

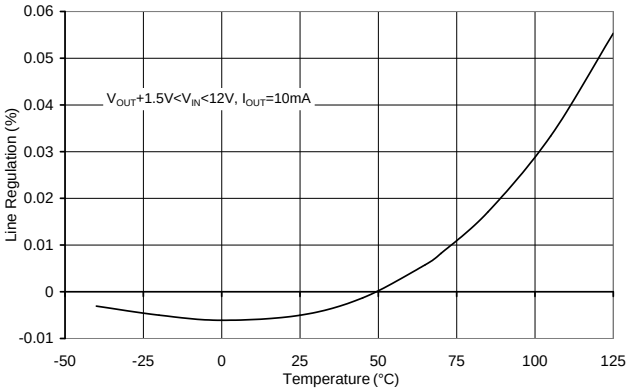

Load Regulation vs. Temperature

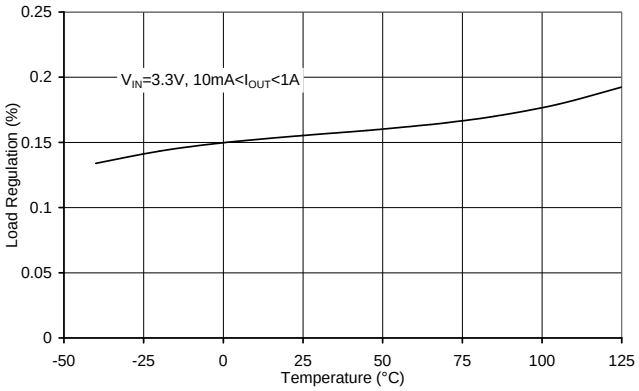

Drop-Out Voltage vs. Current

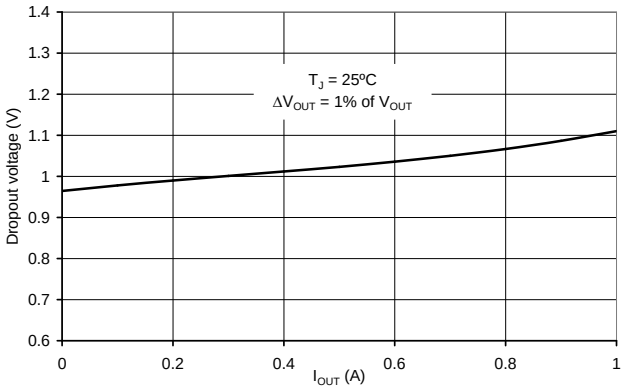

Drop-Out Voltage vs. Temperature

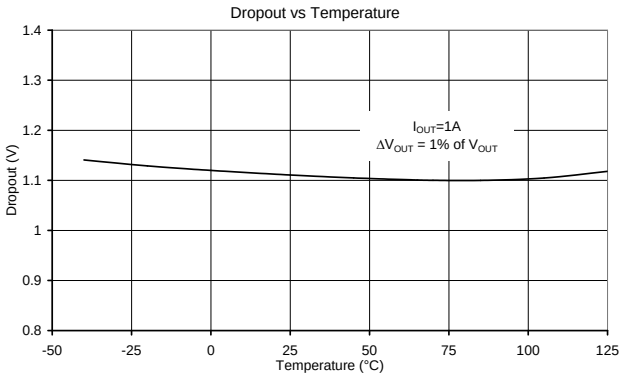

Adjust Pin Input Current

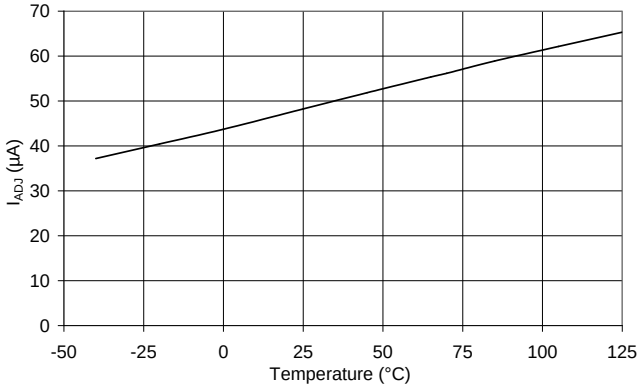

© 2025 Copyright Diodes Incorporated. All Rights Reserved.

Typical Characteristics (continued)

Transient Load Regulation with 10µF Tantalum Capacitor

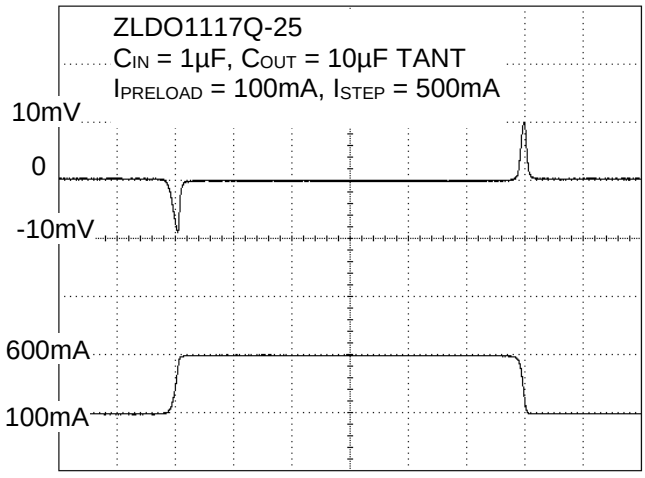

Transient Load Regulation with 4.7µF MLCC Capacitor

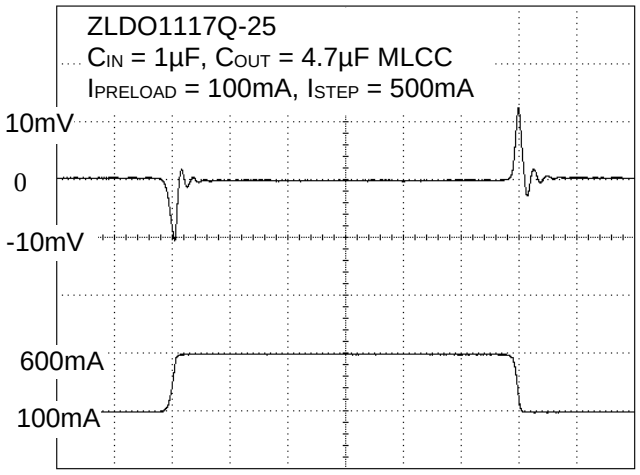

Transient Line Regulation with 4.7µF MLCC Capacitor

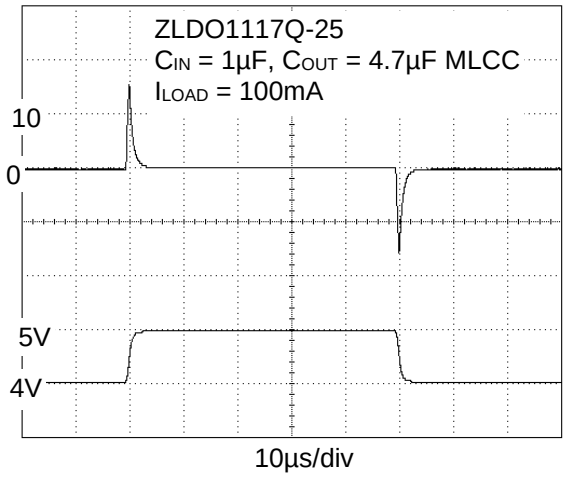

Ripple Rejection

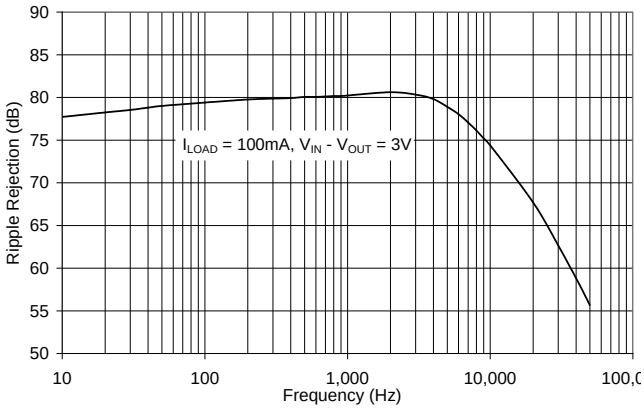

© 2025 Copyright Diodes Incorporated. All Rights Reserved.

Application Information

The ZLDO1117Q family of quasi-LDO regulators is easy to use. They are protected against short circuits and thermal overloads.

Thermal protection circuitry will shut down the regulator should the junction temperature exceed +150°C at the sense point. The ZLDO1117Q is pin compatible with similar 1117 regulators and offers extended temperature range and improved regulation specifications.

Operation

The ZLDO1117Q develops a 1.25V reference voltage between the output and the adjust terminal. By placing a resistor between these two terminals, a constant current is caused to flow through R1 and down through R2. For fixed output variants, Resistors R1 and R2 are internal.

Stability

The ZLDO1117Q requires an output capacitor as part of the device frequency compensation. As part of its improved performance over industry standard 1117 the ZLDO1117Q is suitable for use with MLCC (Multi-Layer Ceramic Chip) capacitors. A minimum of 4.7µF ceramic X7R, 4.7µF tantalum, or 47µF of aluminum electrolytic is required. The ESR of the output capacitor should be less than 0.5Ω. Surface-mount tantalum capacitors, which have very low ESR, are available from several manufacturers. When using MLCC capacitors avoid the use of Y5V dielectrics.

Load Regulation

For improved load regulation the ZLDO1117Q-ADJ should have the upper feedback resistor, R1, connected as close as possible to V_{OUT} and the lower resistor, R2, connected as close as possible to the load GND return. This helps reduce any parasitic resistance in series with the load.

Thermal Considerations

ZLDO1117Q series regulators have internal thermal limiting circuitry designed to protect the device during overload conditions. For continuous normal load conditions however, the maximum junction temperature rating of +125°C must not be exceeded.

It is important to give careful consideration to all sources of thermal resistance from junction to ambient. For the SOT223 and TO252 (DPAK) packages, which are designed to be surface-mounted, additional heat sources mounted near the device must also be considered. Heat sinking is accomplished using the heat spreading capability of the PCB and its copper traces. The θ_{JC} (junction to tab) of the TO252 (DPAK) and SOT223 are +12°C/W and +16°C/W respectively.

Thermal resistance from tab to ambient can be as low as +30°C/W. The total thermal resistance from junction to ambient can be as low as +42 to +46°C/W. This requires a reasonable sized PCB with at least one layer of copper to spread the heat across the board and couple it into the surrounding air. Datasheet specifications using 2oz copper and a 5mm x 5mm pad with T_A = +27°C, no air flow yielded θ_{JA} (junction to tab) of +73°C/W and +107°C/W for TO252 (DPAK) and SOT223 respectively.

The thermal resistance for each application will be affected by thermal interactions with other components on the board. Some experimentation will be necessary to determine the actual value.

Ripple Rejection

When using the ZLDO1117Q adjustable device the adjust terminal can be bypassed to improve ripple rejection. When the adjust terminal is bypassed the required value of the output capacitor increases.

The device will require an output capacitor of 22µF tantalum or 150µF aluminum electrolytic when the adjust pin is bypassed. Normally, capacitor values on the order of 100µF are used in the output of many regulators to ensure good load transient response with large load current changes. Output capacitance can be increased without limit and larger values of output capacitance further improve stability and transient response.

The curves for Ripple Rejection were generated using an adjustable device with the adjust pin bypassed. These curves will hold true for all values of output voltage. For proper bypassing, and ripple rejection approaching the values shown, the impedance of the adjust pin capacitor, at the ripple frequency, should be < R1. R1 is normally in the range of 100Ω to 200Ω. The size of the required adjust pin capacitor is a function of the input ripple frequency. At 120Hz, with R1 = 100Ω, the adjust pin capacitor should be > 13µF. At 10kHz only 0.16µF is needed.

For fixed voltage devices, and adjustable devices without an adjust pin capacitor, the output ripple will increase as the ratio of the output voltage to the reference voltage (V_{OUT}/V_{REF}). For example, with the output voltage equal to 5V, the output ripple will be increased by the ratio of 5V/1.25V. It will increase by a factor of four. Ripple rejection will be degraded by 12dB from the value shown on the curve.

© 2025 Copyright Diodes Incorporated. All Rights Reserved.

More Application Circuits

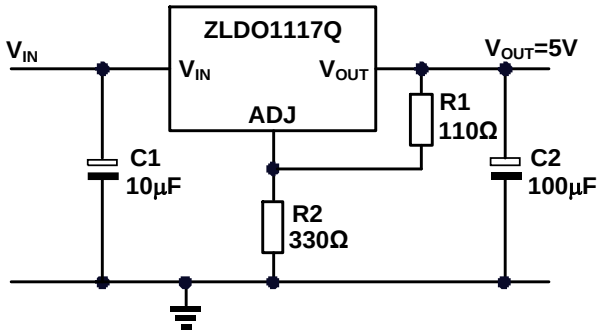

Figure 1. Basic Adjustable Regulator with 5V Output

Using

$$V_{OUT} = 1.25 \bullet \left\{1 + \frac{R2}{R1}\right\}$$

then the output voltage becomes:

$$V_{OUT} = 1.25 \bullet \left\{1 + \frac{330}{110}\right\} = 5.0V$$

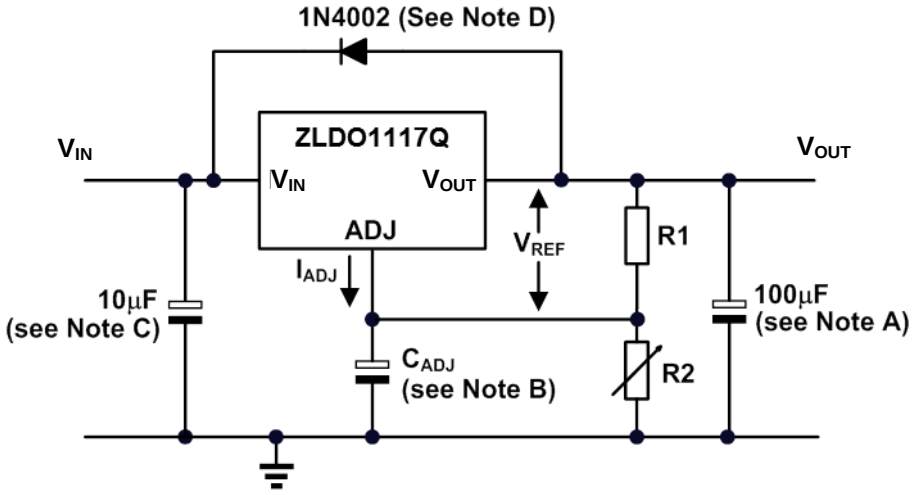

Figure 2. Adjustable Regulator with I_{ADJ} Errors

$$V_{OUT} = 1.25 \bullet \left\{1 + \frac{R2}{R1}\right\} + I_{ADJ} \bullet R2$$

Because I_{ADJ} typically is 55µA, its effect is negligible in most applications.

$$V_{OUT} = 1.25 \bullet \left\{1 + \frac{330}{110} + 55 \bullet 10^{-6} \bullet 330\right\} = 5.02V \sim 0.4\%$$

A. Output capacitor selection is critical for regulator stability. Larger C_{OUT} values benefit the regulator by improving transient response and loop stability.

B. C_{ADJ} can be used to improve ripple rejection. If C_{ADJ} is used, a C_{OUT} that is larger in value than C_{ADJ} must be used.

C. C_{IN} is recommended if ZLDO1117Q is not located near the power supply filter.

D. An external diode is recommended to protect the regulator if the input instantaneously is shorted to GND.

E. This device is designed to be stable with tantalum and MLCC capacitors with an ESR less than 0.47Ω.

© 2025 Copyright Diodes Incorporated. All Rights Reserved.

More Application Circuits (continued)

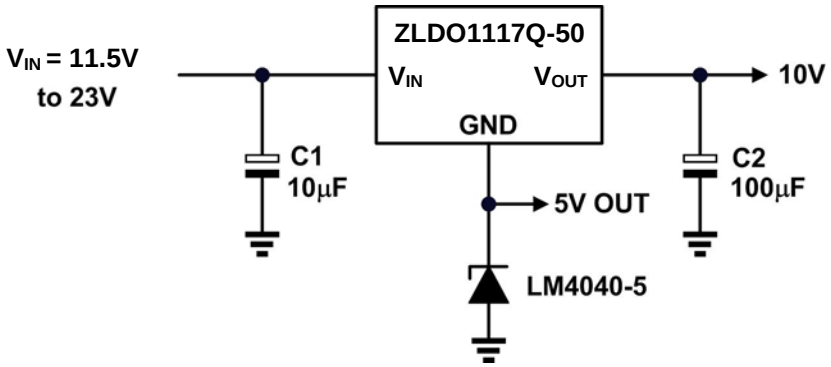

Figure 3. ZLDO1117Q with Extended Output Voltage

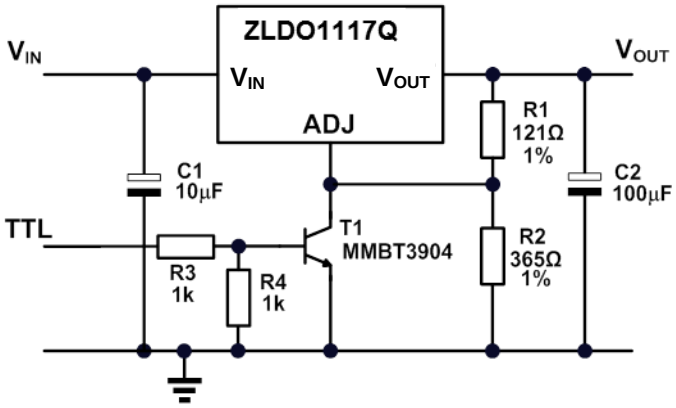

Figure 4. ZLDO1117Q with Disable Function

© 2025 Copyright Diodes Incorporated. All Rights Reserved.

Ordering Information

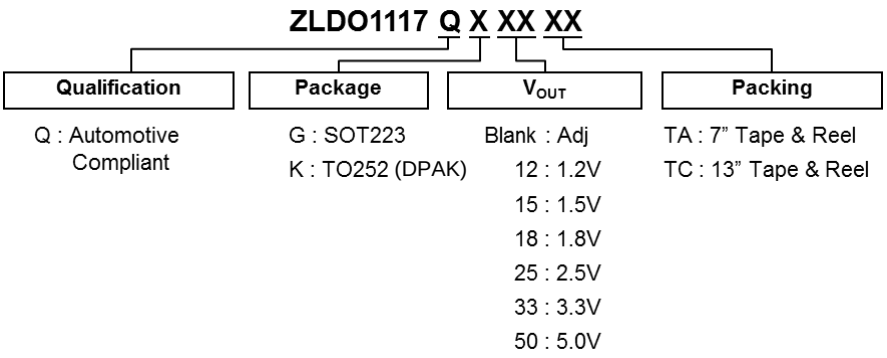

Orderable Part Number	Output Voltage	Package (Note 14)	Package Code	Packing				Qualification Grade (Note 15)
				Qty.	Tape Width	Reel Size	Carrier	
ZLDO1117QKTC	Adjustable	TO252 (DPAK)	K	2500	16mm	13"	Tape & Reel	Automotive Compliant
ZLDO1117QGTA		SOT223	G	1000	12mm	7"	Tape & Reel	Automotive Compliant
ZLDO1117QK12TC	1.2V	TO252 (DPAK)	K	2500	16mm	13"	Tape & Reel	Automotive Compliant
ZLDO1117QG12TA		SOT223	G	1000	12mm	7"	Tape & Reel	Automotive Compliant
ZLDO1117QK15TC	1.5V	TO252 (DPAK)	K	2500	16mm	13"	Tape & Reel	Automotive Compliant
ZLDO1117QG15TA		SOT223	G	1000	12mm	7"	Tape & Reel	Automotive Compliant
ZLDO1117QK18TC	1.8V	TO252 (DPAK)	K	2500	16mm	13"	Tape & Reel	Automotive Compliant
ZLDO1117QG18TA		SOT223	G	1000	12mm	7"	Tape & Reel	Automotive Compliant
ZLDO1117QK25TC	2.5V	TO252 (DPAK)	K	2500	16mm	13"	Tape & Reel	Automotive Compliant
ZLDO1117QG25TA		SOT223	G	1000	12mm	7"	Tape & Reel	Automotive Compliant
ZLDO1117QK33TC	3.3V	TO252 (DPAK)	K	2500	16mm	13"	Tape & Reel	Automotive Compliant
ZLDO1117QG33TA		SOT223	G	1000	12mm	7"	Tape & Reel	Automotive Compliant
ZLDO1117QK50TC	5.0V	TO252 (DPAK)	K	2500	16mm	13"	Tape & Reel	Automotive Compliant
ZLDO1117QG50TA		SOT223	G	1000	12mm	7"	Tape & Reel	Automotive Compliant

Notes: 14. Pad layout as shown on Diodes Incorporated suggested pad layout, which can be found on our website at http://www.diodes.com/package-outlines.html.
15. ZLDO1117Q has been qualified to AEC-Q100 grade 2 over a -40°C to +105°C ambient temperature range and is classified as "Automotive Compliant" supporting PPAP documentation. See ZLDO1117 datasheet for commercial qualified versions.

© 2025 Copyright Diodes Incorporated. All Rights Reserved.

Marking Information

(1) TO252 (DPAK)

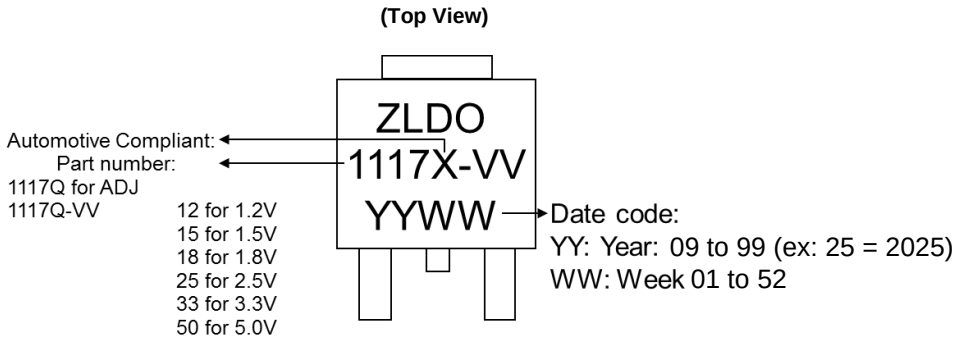

Orderable Part Number	Package	Identification Code
ZLDO1117QK12TC	TO252 (DPAK)	1117Q-12
ZLDO1117QK15TC	TO252 (DPAK)	1117Q-15
ZLDO1117QK18TC	TO252 (DPAK)	1117Q-18
ZLDO1117QK25TC	TO252 (DPAK)	1117Q-25
ZLDO1117QK33TC	TO252 (DPAK)	1117Q-33
ZLDO1117QK50TC	TO252 (DPAK)	1117Q-50
ZLDO1117QKTC	TO252 (DPAK)	1117Q

(2) SOT223

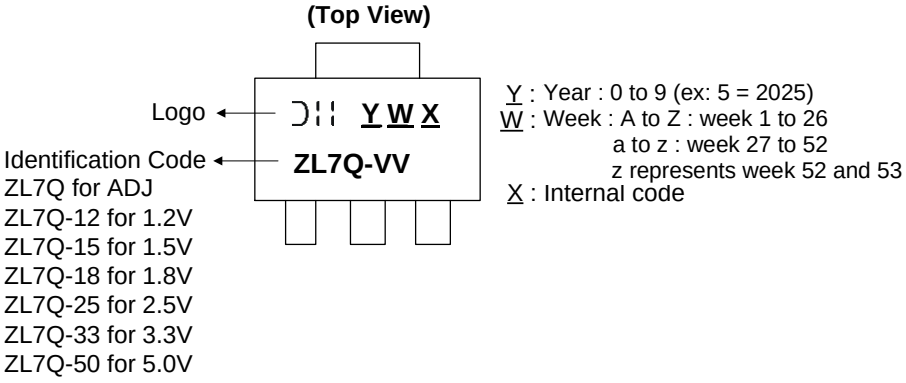

Orderable Part Number	Package	Identification Code
ZLDO1117QG12TA	SOT223	ZL7Q-12
ZLDO1117QG15TA	SOT223	ZL7Q-15
ZLDO1117QG18TA	SOT223	ZL7Q-18
ZLDO1117QG25TA	SOT223	ZL7Q-25
ZLDO1117QG33TA	SOT223	ZL7Q-33
ZLDO1117QG50TA	SOT223	ZL7Q-50
ZLDO1117QGTA	SOT223	ZL7Q
ZLDO1117QG33TA-99 (Note 16)	SOT223	ZL7Q-33

Note: 16. The ZLDO1117QG33TA-99 is for special customer.

© 2025 Copyright Diodes Incorporated. All Rights Reserved.

Package Outline Dimensions

Please see http://www.diodes.com/package-outlines.html for the latest version.

SOT223

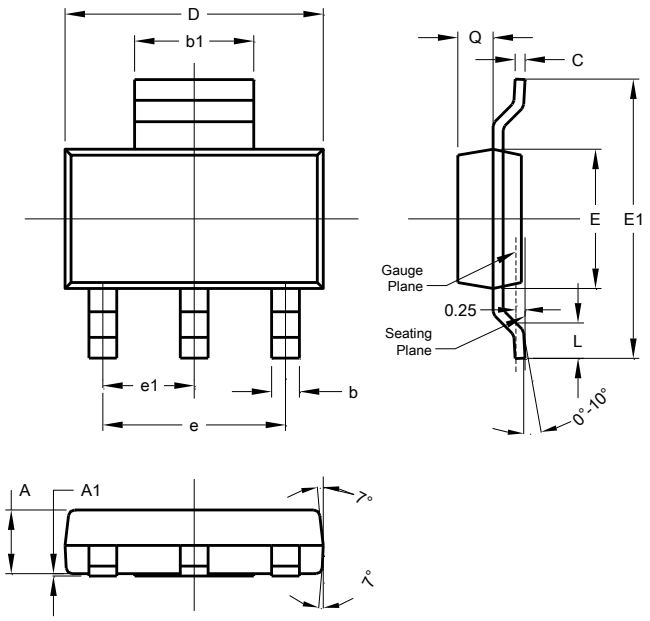

SOT223			
Dim	**Min**	**Max**	**Typ**
A	1.55	1.65	1.60
A1	0.010	0.15	0.05
b	0.60	0.80	0.70
b1	2.90	3.10	3.00
C	0.20	0.30	0.25
D	6.45	6.55	6.50
E	3.45	3.55	3.50
E1	6.90	7.10	7.00
e	-	-	4.60
e1	-	-	2.30
L	0.85	1.05	0.95
Q	0.84	0.94	0.89
All Dimensions in mm			

TO252 (DPAK)

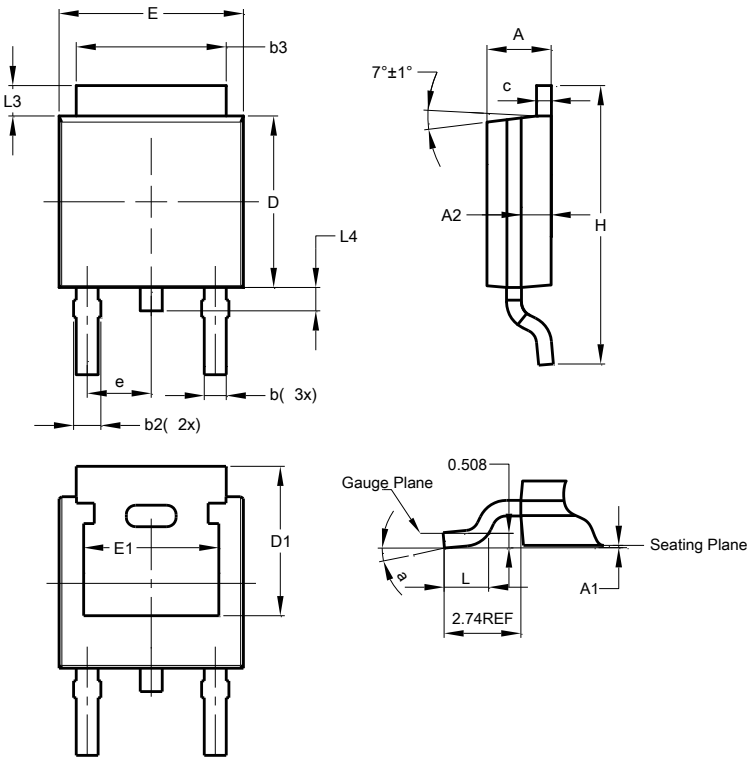

TO252 (DPAK)			
Dim	**Min**	**Max**	**Typ**
A	2.19	2.39	2.29
A1	0.00	0.13	0.08
A2	0.97	1.17	1.07
b	0.64	0.88	0.783
b2	0.76	1.14	0.95
b3	5.21	5.50	5.33
c	0.45	0.58	0.531
D	6.00	6.20	6.10
D1	5.21	--	--
e	2.286 BSC		
E	6.45	6.70	6.58
E1	4.32	--	--
H	9.40	10.41	9.91
L	1.40	1.78	1.59
L3	0.88	1.27	1.08
L4	0.64	1.02	0.83
a	0°	10°	--
All Dimensions in mm			

© 2025 Copyright Diodes Incorporated. All Rights Reserved.

Suggested Pad Layout

Please see http://www.diodes.com/package-outlines.html for the latest version.

SOT223

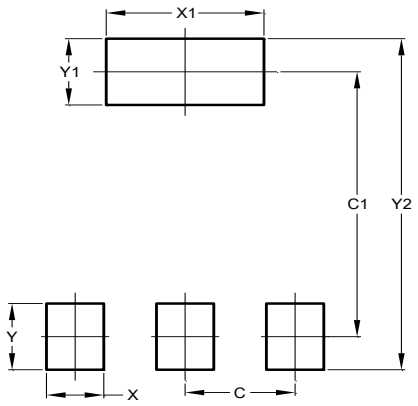

Dimensions	Value (in mm)
C	2.30
C1	6.40
X	1.20
X1	3.30
Y	1.60
Y1	1.60
Y2	8.00

TO252 (DPAK)

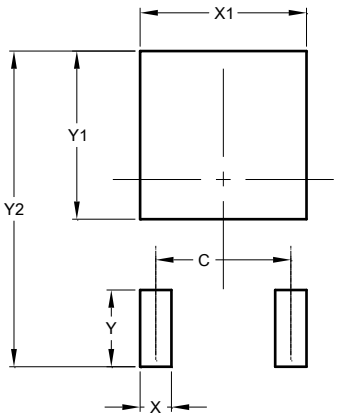

Dimensions	Value (in mm)
C	4.572
X	1.060
X1	5.632
Y	2.600
Y1	5.700
Y2	10.700

Mechanical Data

- Moisture Sensitivity: Level 1 per JESD22-A113
- Terminals: Finish: Matte Tin Plated Leads, Solderable per M2003 JESD22-B102 e3
- Weight:
  - SOT223: 0.113 grams (Approximate)
  - TO252 (DPAK): 0.315 grams (Approximate)

© 2025 Copyright Diodes Incorporated. All Rights Reserved.

IMPORTANT NOTICE

1. DIODES INCORPORATED (Diodes) AND ITS SUBSIDIARIES MAKE NO WARRANTY OF ANY KIND, EXPRESS OR IMPLIED, WITH REGARDS TO ANY INFORMATION CONTAINED IN THIS DOCUMENT, INCLUDING, BUT NOT LIMITED TO, THE IMPLIED WARRANTIES OF MERCHANTABILITY, FITNESS FOR A PARTICULAR PURPOSE OR NON-INFRINGEMENT OF THIRD PARTY INTELLECTUAL PROPERTY RIGHTS (AND THEIR EQUIVALENTS UNDER THE LAWS OF ANY JURISDICTION).

2. The Information contained herein is for informational purpose only and is provided only to illustrate the operation of Diodes' products described herein and application examples. Diodes does not assume any liability arising out of the application or use of this document or any product described herein. This document is intended for skilled and technically trained engineering customers and users who design with Diodes' products. Diodes' products may be used to facilitate safety-related applications; however, in all instances customers and users are responsible for (a) selecting the appropriate Diodes products for their applications, (b) evaluating the suitability of Diodes' products for their intended applications, (c) ensuring their applications, which incorporate Diodes' products, comply the applicable legal and regulatory requirements as well as safety and functional-safety related standards, and (d) ensuring they design with appropriate safeguards (including testing, validation, quality control techniques, redundancy, malfunction prevention, and appropriate treatment for aging degradation) to minimize the risks associated with their applications.

3. Diodes assumes no liability for any application-related information, support, assistance or feedback that may be provided by Diodes from time to time. Any customer or user of this document or products described herein will assume all risks and liabilities associated with such use, and will hold Diodes and all companies whose products are represented herein or on Diodes' websites, harmless against all damages and liabilities.

4. Products described herein may be covered by one or more United States, international or foreign patents and pending patent applications. Product names and markings noted herein may also be covered by one or more United States, international or foreign trademarks and trademark applications. Diodes does not convey any license under any of its intellectual property rights or the rights of any third parties (including third parties whose products and services may be described in this document or on Diodes' website) under this document.

5. Diodes' products are provided subject to Diodes' Standard Terms and Conditions of Sale (https://www.diodes.com/about/company/terms-and-conditions/terms-and-conditions-of-sales/) or other applicable terms. This document does not alter or expand the applicable warranties provided by Diodes. Diodes does not warrant or accept any liability whatsoever in respect of any products purchased through unauthorized sales channel.

6. Diodes' products and technology may not be used for or incorporated into any products or systems whose manufacture, use or sale is prohibited under any applicable laws and regulations. Should customers or users use Diodes' products in contravention of any applicable laws or regulations, or for any unintended or unauthorized application, customers and users will (a) be solely responsible for any damages, losses or penalties arising in connection therewith or as a result thereof, and (b) indemnify and hold Diodes and its representatives and agents harmless against any and all claims, damages, expenses, and attorney fees arising out of, directly or indirectly, any claim relating to any noncompliance with the applicable laws and regulations, as well as any unintended or unauthorized application.

7. While efforts have been made to ensure the information contained in this document is accurate, complete and current, it may contain technical inaccuracies, omissions and typographical errors. Diodes does not warrant that information contained in this document is error-free and Diodes is under no obligation to update or otherwise correct this information. Notwithstanding the foregoing, Diodes reserves the right to make modifications, enhancements, improvements, corrections or other changes without further notice to this document and any product described herein. This document is written in English but may be translated into multiple languages for reference. Only the English version of this document is the final and determinative format released by Diodes.

8. Any unauthorized copying, modification, distribution, transmission, display or other use of this document (or any portion hereof) is prohibited. Diodes assumes no responsibility for any losses incurred by the customers or users or any third parties arising from any such unauthorized use.

9. This Notice may be periodically updated with the most recent version available at https://www.diodes.com/about/company/terms-and-conditions/important-notice

The Diodes logo is a registered trademark of Diodes Incorporated in the United States and other countries.
All other trademarks are the property of their respective owners.
© 2025 Diodes Incorporated. All Rights Reserved.

www.diodes.com

© 2025 Copyright Diodes Incorporated. All Rights Reserved.

ENTEGRECİ

Bu belge www.entegreci.com üzerinden sunulmaktadır.

Elektronik komponent tedarikinde Entegreci

Entegreci, Eskişehir merkezli, Türkiye geneline satış yapan bir elektronik komponent mağazasıdır. Entegreler (IC), mikrodenetleyiciler, transistörler, diyotlar, pasif elemanlar, konnektörler, modüller ve geliştirme kartları tek adetten seri üretim adetlerine kadar satılır. Ürün sayfalarında güncel stok durumunu, fiyatı ve datasheet bağlantısını bulabilirsiniz.

Parça koduyla arama

Üretici parça numarasını yazın; stok ve fiyatı hemen görün.

www.entegreci.com

Ürün kategorileri

Entegreden kapasitöre tüm elektronik komponent kategorileri.

Kategorilere göz atın

Üreticiler

Aradığınız üreticinin ürünlerini tek sayfada inceleyin.

Üreticileri görün

Toplu alım ve teklif

Listede olmayan ya da yüksek adetli parçalar için teklif isteyin.

Teklif isteyin

www.entegreci.com | **destek@entegreci.com** | **0850 305 90 34**

Entegreci is an online electronic components store based in Türkiye. Search by manufacturer part number to see stock, prices and datasheets for integrated circuits, microcontrollers, transistors, passive components and connectors, or request a quote for parts that are not listed.

Bu sayfa Entegreci tarafından eklenmiştir. Belgenin önceki sayfaları asıl yayıncısına aittir ve içeriği değiştirilmemiştir; en güncel sürüm için belgenin yayıncısına başvurun.