ZXCL SERIES
Micropower SC70-5 & SOT23-5 low dropout regulators

ZXCL5213V25, ZXCL5213V26, ZXCL5213V28, ZXCL5213V30, ZXCL5213V33, ZXCL250, ZXCL260, ZXCL280, ZXCL300, ZXCL330

Description

The ZXCL series have been designed with space sensitive systems in mind. They are available in the ultra small SC70-5 package, which is half the size of SOT23 based regulators.

The devices can be used with all types of output capacitors including low ESR ceramics and typical dropout voltage, is only 85mV at 50mA load. Supply current is minimised with a ground pin current of only 50μA at full 150mA load. Logic control allows the devices to be shut down, consuming typically less than 10nA. These features make the device ideal for battery powered applications where power economy is critical.

For applications requiring improved performance over alternative devices, the ZXCL is also offered in the 5 pin SOT23 package with an industry standard pinout.

The devices feature thermal overload and over-current protection and are available with output voltages of 2.5V, 2.6V, 2.8V, 3V, 3.3V.

Package footprint

SOT23-5 (see P7 for SC70-5)
Package suffix - E5

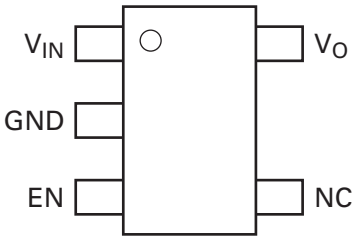

Top view

Features

- Low 85mV dropout at 50mA load
- 50μA ground pin current with full 150mA load
- 2.5, 2.6, 2.8, 3, & 3.3 volts output
- Very low noise, without bypass capacitor
- 5-pin SC70 and SOT23 package
- No-load stable

Applications

- Cellular and Cordless phones
- PDA
- Hand held instruments
- Camera, Camcorder, Personal stereo
- PC cards
- Portable and battery-powered equipment

No-Load Stability, the ZXCL device will maintain regulation and is stable with no external load. e.g. CMOS RAM applacations.

Typical application circuit

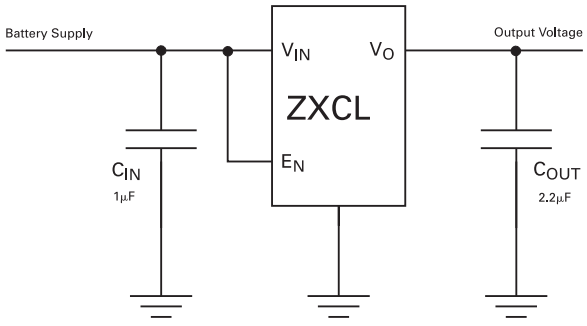

© Zetex Semiconductors plc 2007

Ordering information

Order reference	Voltage (V)	Package	Part marking	Status	Reel size (inches)	Tape width (mm)	Quantity per reel
ZXCL250H5TA	2.5	SC70-5	L25A	Active	7	8	3000
ZXCL260H5TA	2.6	SC70-5	L26A	Active	7	8	3000
ZXCL280H5TA	2.8	SC70-5	L28A	Active	7	8	3000
ZXCL300H5TA	3.0	SC70-5	L30A	Active	7	8	3000
ZXCL330H5TA	3.3	SC70-5	L33A	Active	7	8	3000
ZXCL400H5TA	4.0	SC70-5	L40A	Obsolete	7	8	3000
ZXCL5213V25H5TA	2.5	SC70-5	L25C	Active	7	8	3000
ZXCL5213V26H5TA	2.6	SC70-5	L26C	Active	7	8	3000
ZXCL5213V28H5TA	2.8	SC70-5	L28C	Active	7	8	3000
ZXCL5213V30H5TA	3.0	SC70-5	L30C	Active	7	8	3000
ZXCL5213V33H5TA	3.3	SC70-5	L33C	Active	7	8	3000
ZXCL5213V40H5TA	4.0	SC70-5	L40C	Not rec. for new designs	7	8	3000
ZXCL250E5TA	2.5	SOT23-5	L25B	Active	7	8	3000
ZXCL260E5TA	2.6	SOT23-5	L26B	Active	7	8	3000
ZXCL280E5TA	2.8	SOT23-5	L28B	Active	7	8	3000
ZXCL300E5TA	3.0	SOT23-5	L30B	Active	7	8	3000
ZXCL330E5TA	3.3	SOT23-5	L33B	Active	7	8	3000
ZXCL400E5TA	4.0	SOT23-5	L40B	Obsolete	7	8	3000

Absolute maximum rating

Terminal Voltage with respect to GND

V_{IN} -0.3V to 7.0V

E_N -0.3V to 10V

V_O -0.3V to 5.5V

Package power dissipation (T_A=25°C)

SC70-5 300mW (Note 1)

SOT23-5 450mW (Note 1)

Output short circuit duration Infinite

Continuous power dissipation Internally limited

Operating temperature range -40°C to +85°C

Storage temperature range -55°C to +125°C

Stresses beyond those listed under "Absolute maximum ratings" may cause permanent damage to the device. These are stress ratings only, and functional operation of the device at these or any other conditions beyond those indicated in the operational sections of the specifications is not implied. Exposure to absolute maximum conditions for extended periods may affect device reliability.

© Zetex Semiconductors plc 2007

Recommended operating conditions

Symbol	Parameter	Min	Max	Units
V_{IN}	Input voltage range	2.0*	5.5	V
V_{ENH}	Enable pin logic level High pin	2.2	10	V
V_{ENL}	Enable pin logic level Low pin	0	0.8	V
T_A	Ambient temperature range	-40	85	°C

* Output voltage will start to rise when V_{IN} exceeds a value or approximately 1.3V. For normal operation, $V_{IN(min)} > V_{OUT(nom)} + 0.5V$.

Pin description

Symbol	Parameter
V_{IN}	Supply voltage
G_{ND}	Ground
E_N	Active HIGH enable input. TTL/CMOS logic compatible. Connect to V_{IN} or logic high for normal operation
N/C	No connection
V_O	Regulator output

© Zetex Semiconductors plc 2007

Electrical characteristics

$V_{IN} = V_O = 0.5V$, all values at $T_A = 25°C$ (Unless otherwise stated)

Symbol	Parameter	Conditions		Limits			Units
				Min.	Typ.	Max.	
V_O	Output voltage	I_O=1mA		-2%		+2%	V
		I_O=100mA V_O+0.5V < V_{IN} < V_{IN} max		-3%		+3%	V
$\Delta V_O/\Delta T$	Output voltage temperature coefficient				-15		ppm/°C
$I_{O(Max)}$	Output current			150			mA
		XCL250/5213V25 only		100			
I_{OLIM}	Over current limit			160		800	mA
		XCL250/5213V25 only		105	230	750	
I_O	Ground pin current	No Load			25	50	µA
		I_O=150mA			50	120	µA
		I_O=100mA			40	100	µA
V_{DO}	Dropout voltage note 3	I_O=10mA	All variants		15		mV
		I_O=50mA			85		mV
		I_O=100mA	ZXCL250 / 5213V25		163	325	mV
		I_O=100mA	ZXCL260 / 5213V26		155	310	mV
		I_O=100mA	ZXCL280 / 5213V28		140	280	mV
		I_O=100mA	ZXCL300 / 5213V30		140	280	mV
		I_O=100mA	ZXCL330 / 5213V33		140	280	mV
		I_O=100mA	ZXCL400 / 5213V40		140	280	mV
ΔV_{LNR}	Line regulation	V_{IN}=(V_O+0.5V) to 5.5V, I_O=1mA			0.02	0.1	%/V
ΔV_{LDR}	Load regulation	I_O=1mA to 100mA			0.01	0.04	%/mA
E_N	Output noise voltage	f=10Hz to 100kHz, C_O=10µF			50		μV_{RMS}
V_{ENHS}	Enable pin hysteresis				150		mV
I_{EN}	Enable pin input current	V_{EN}=5.5V				100	nV
I_{OSD}	Shutdown supply current	V_{EN}=0V				1	µA
T_{SD}	Thermal shutdown temperature			125		165	°C

Device testing is performed at T_A=25°C. Device thermal performance is guaranteed by design.

Note1: Maximum power dissipation is calculated assuming the device is mounted on a PCB measuring 2 inches square

Note2:Output voltage will start to rise when V_{IN} exceeds a value or approximately 1.3V. For normal operation, $V_{IN(min)} > V_{OUT(nom)} + 0.5V$.

Note3:Dropout voltage is defined as the difference between V_{IN} and V_O, when V_O has dropped 100mV below its nominal value. Nominal value of V_O is defined at $V_{IN}=V_O+0.5V$.

© Zetex Semiconductors plc 2007

Typical characteristics (ZXCL280 / 5213 shown)

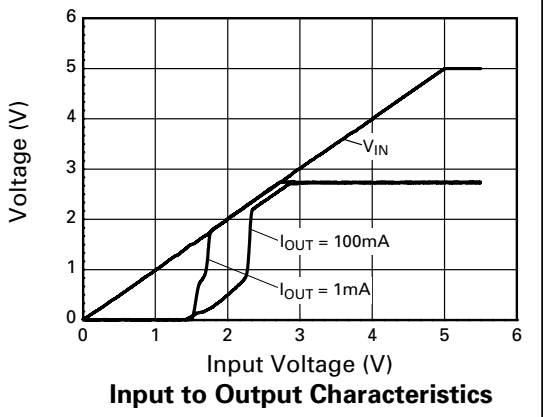

Input to Output Characteristics

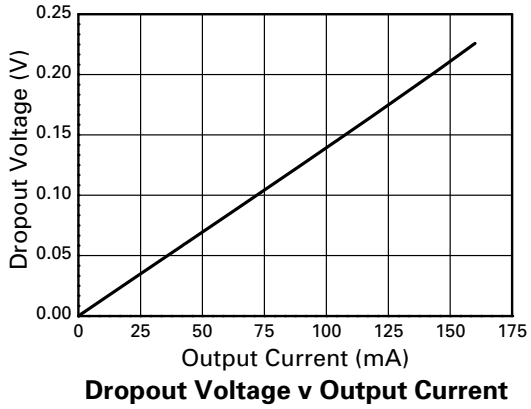

Dropout Voltage v Output Current

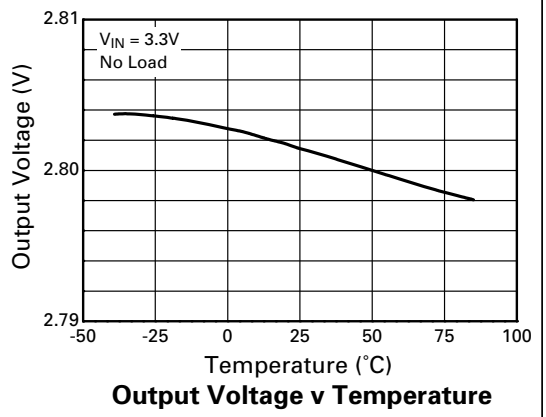

Output Voltage v Temperature

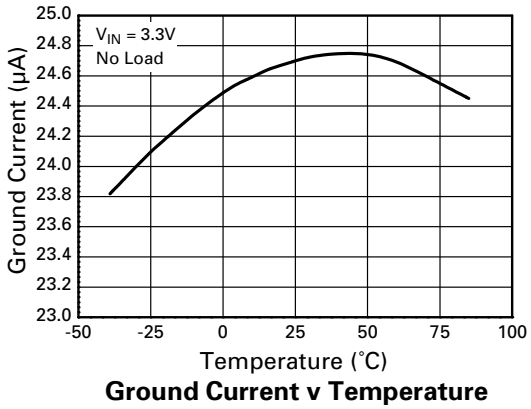

Ground Current v Temperature

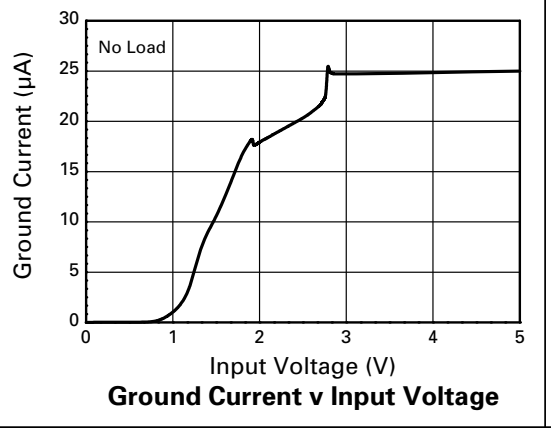

Ground Current v Input Voltage

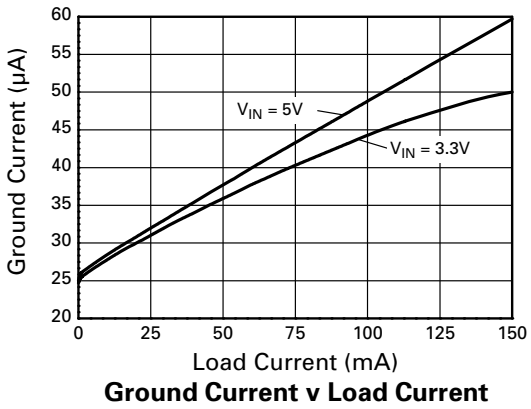

Ground Current v Load Current

© Zetex Semiconductors plc 2007

Typical characteristics

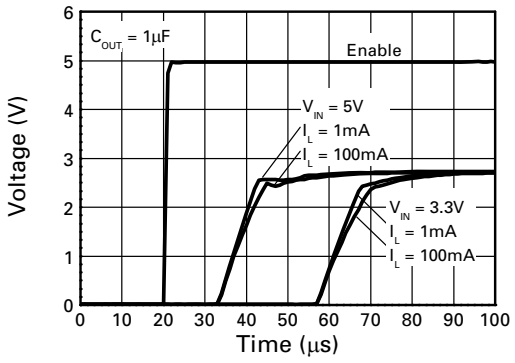

Start-Up Response

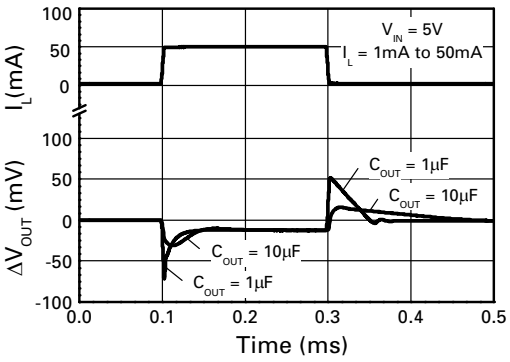

Load Response

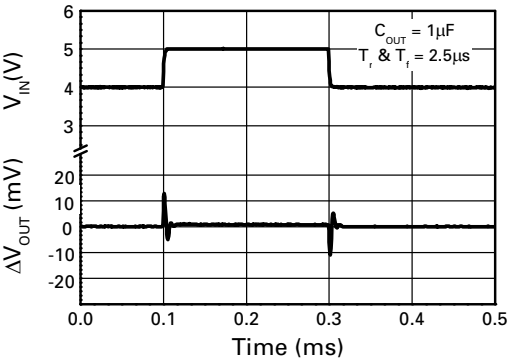

Line Rejection I_L = 1mA

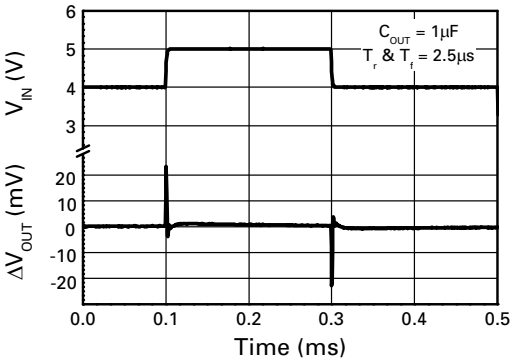

Line Rejection I_L = 100mA

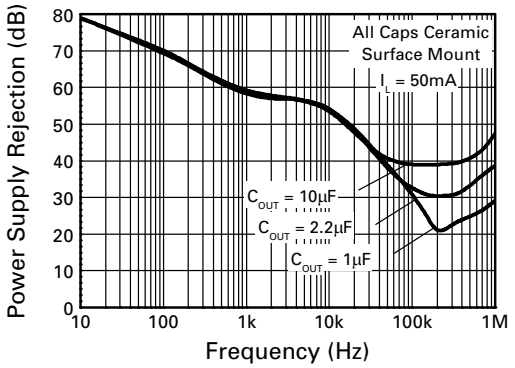

Power Supply Rejection v Frequency

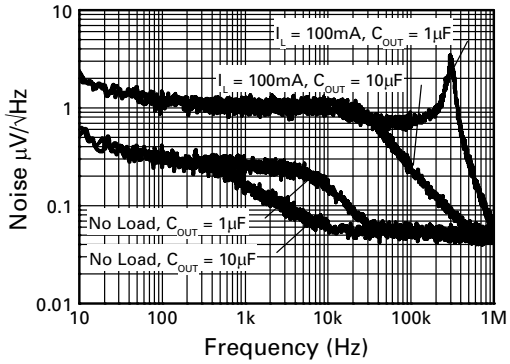

Output Noise v Frequency

© Zetex Semiconductors plc 2007

Connection diagrams

SC70-5 (H5)

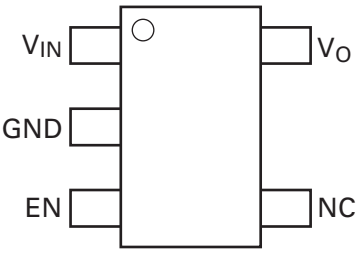

Top view

ZXCLxxx

SC70-5 (H5)

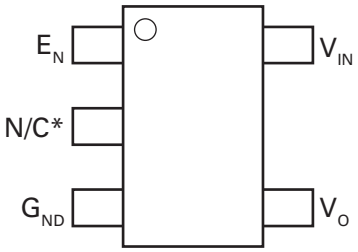

Top view

* Should be left open circuit or connected to pin 3

ZXCL5213Vxx

Schematic diagram

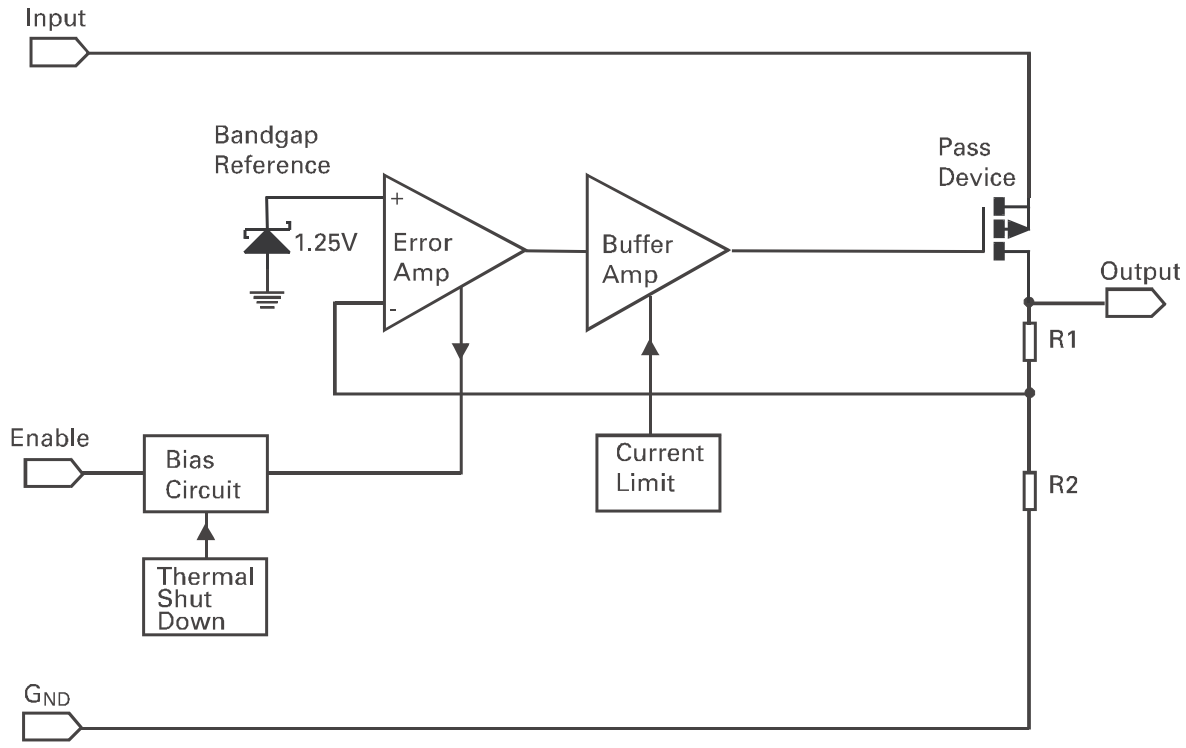

© Zetex Semiconductors plc 2007

Input to Output Diode

In common with many other LDO regulators, the ZXCL device has an inherent diode associated with the output series pass transistor. This diode has its anode connected to the output and its cathode to the input. The internal diode is normally reverse biased, but will conduct if the output is forced above the input by more than a VBE (approximately 0.6V). Current will then flow from V_{out} to V_{in}. For safe operation, the maximum current in this diode should be limited to 5mA continuous and 30mA peak. An external schottky diode may be used to provide protection when this condition cannot be satisfied.

Increased Output current

Any ZXCL series device may be used in conjunction with an external PNP transistor to boost the output current capability. In the application circuit shown below, a FMMT717 device is employed as the external pass element. This SOT23 device can supply up to 2.5A maximum current subject to the thermal dissipation limits of the package (625mW). Alternative devices may be used to supply higher levels of current. Note that with this arrangement, the dropout voltage will be increased by the V_{BE} drop of the external device. Also, care should be taken to protect the pass transistor in the event of excessive output current.

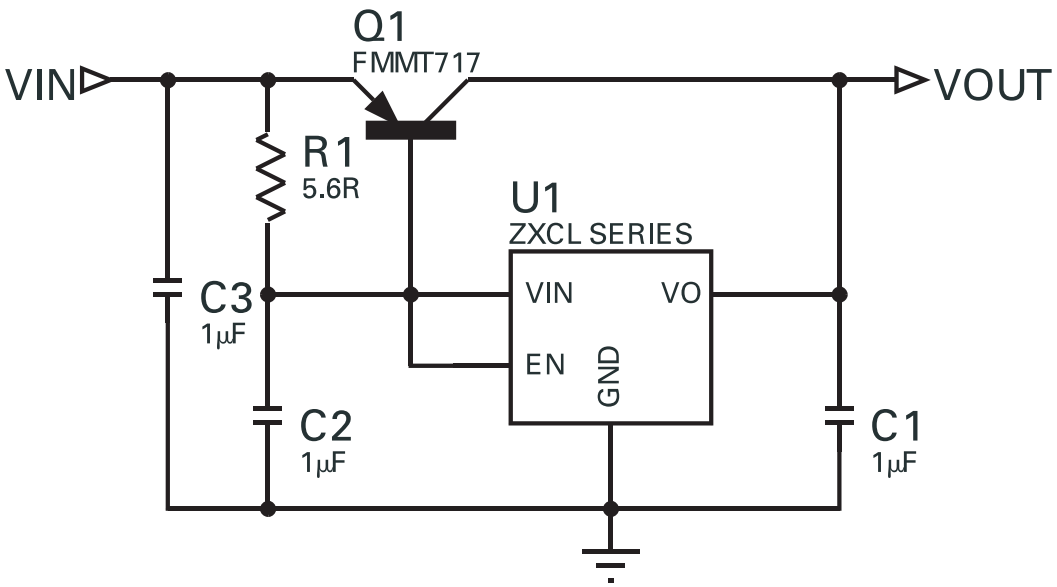

Scheme to boost output current to 2A

© Zetex Semiconductors plc 2007

Applications information

Enable control

A TTL compatible input is provided to allow the regulator to be shut down. A low voltage on the Enable pin puts the device into shutdown mode. In this mode the regulator circuit is switched off and the quiescent current reduces to virtually zero (typically less than 10nA) for input voltages above the minimum operating threshold of the device. A high voltage on the Enable pin ensures normal operation.

The Enable pin can be connected to V_{IN} or driven from an independent source of up to 10V maximum. (e.g. CMOS logic) for normal operation. There is no clamp diode from the Enable pin to V_{IN}, so the V_{IN} pin may be at any voltage within its operating range irrespective of the voltage on the Enable pin. However input voltage rise time should be kept below 5ms to ensure consistent start-up response.

Current Limit

The ZXCL devices include a current limit circuit which restricts the maximum output current flow to typically 230mA. Practically the range of over-current should be considered as minimum 160mA to maximum 800mA. The device's robust design means that an output short circuit to any voltage between ground and V_{OUT} can be tolerated for an indefinite period.

Thermal Overload

Thermal overload protection is included on chip. When the device junction temperature exceeds a minimum 125°C the device will shut down. The sense circuit will re-activate the output as the device cools. It will then cycle until the overload is removed. The thermal overload protection will be activated when high load currents or high input to output voltage differentials cause excess dissipation in the device.

Start up delay

A small amount of hysteresis is provided on the Enable pin to ensure clean switching. This feature can be used to introduce a start up delay if required. Addition of a simple RC network on the Enable pin provides this function. The following diagram illustrates this circuit connection. The equation provided enables calculation of the delay period.

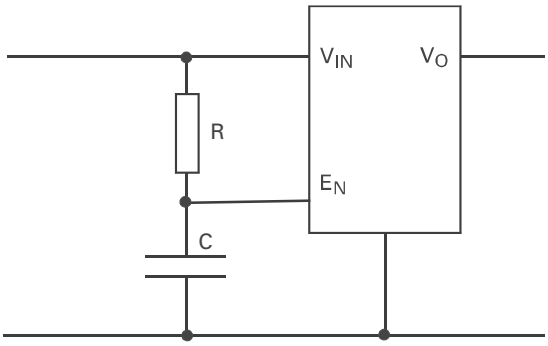

Figure 1 Circuit Connection

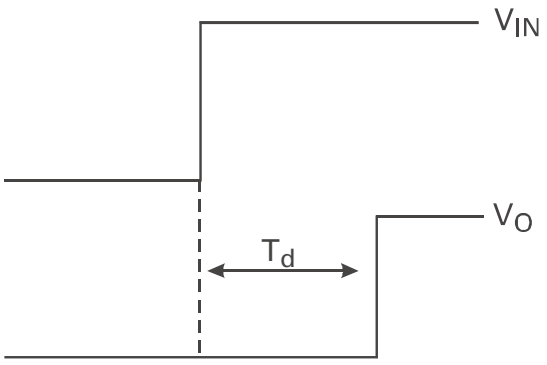

Figure 2 Start up delay (T_d)

$$T_{d(NOM)} = RC\ln\left(\frac{V_{IN}}{V_{IN} - 1.5}\right)$$

Calculation of start up delay as above

© Zetex Semiconductors plc 2007

Applications information (Cont)

Power dissipation

The maximum allowable power dissipation of the device for normal operation (P_{max}), is a function of the package junction to ambient thermal resistance (θ_{ja}), maximum junction temperature (Tj_{max}), and ambient temperature (T_{amb}), according to the expression:

$$P_{max} = (Tj_{max} - T_{amb}) / \theta_{ja}$$

The maximum output current (I_{max}) at a given value of Input voltage (V_{IN}) and output voltage (V_{OUT}) is then given by

$$I_{max} = P_{max} / (V_{IN} - V_{OUT})$$

The value of qja is strongly dependent upon the type of PC board used. Using the SC70 package it will range from approximately 280°C/W for a multi-layer board to around 450°C/W for a single sided board. It will range from 180°C/W to 300°C/W for the SOT23-5 package. To avoid entering the thermal shutdo wn state, Tjmax should be assumed to be 125°C and Imax less than the over-current limit,(I_{OLIM}). Power derating for the SC70 and SOT23-5 packages is shown in the following graph.

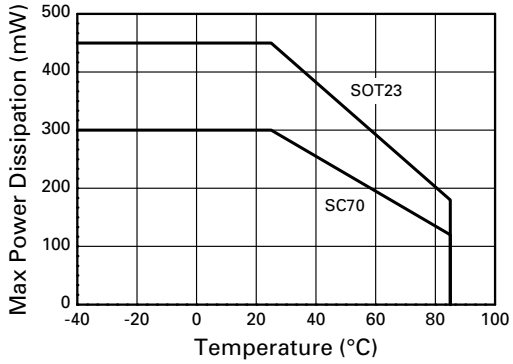

Derating Curve

Capacitor selection and regulator stability

The device is designed to operate with all types of output capacitor, including tantalum and low ESR ceramic. For stability over the full operating range from no load to maximum load, an output capacitor with a minimum value of 1μF is recommended, although this can be increased without limit to improve load transient performance. Higher values of output capacitor will also reduce output noise. Capacitors with ESR less than 0.5V are recommended for best results.

The dielectric of the ceramic capacitance is an important consideration for the ZXCL Series operation over temperature. Zetex recommends minimum dielectric specification of X7R for the input and output capacitors. For example a ceramic capacitor with X7R dielectric will lose 20% of its capacitance over a -40°C to 85°C temperature range, whereas a capacitor with a Y5V dielectric loses 80% of its capacitance at -40°C and 75% at 85°C.

An input capacitor of 1μF (ceramic or tantalum) is recommended to filter supply noise at the device input and will improve ripple rejection.

The input and output capacitors should be positioned close to the device, and a ground plane board layout should be used to minimise the effects of parasitic track resistance.

Dropout voltage

The output pass transistor is a large PMOS device, which acts like a resistor when the regulator enters the dropout region. The dropout voltage is therefore proportional to output current as shown in the typical characteristics.

Ground current

The use of a PMOS device ensures a low value of ground current under all conditions including dropout, start-up and maximum load.

Power supply rejection and load transient response

Line and Load transient response graphs are shown in the typical characteristics.

These show both the DC and dynamic shift in the output voltage with step changes of input voltage and load current, and how this is affected by the output capacitor.

If improved transient response is required, then an output capacitor with lower ESR value should be used. Larger capacitors will reduce over/ undershoot, but will increase the settling time. Best results are obtained using a ground plane layout to minimise board parasitics.

© Zetex Semiconductors plc 2007

S70-5 Package outline

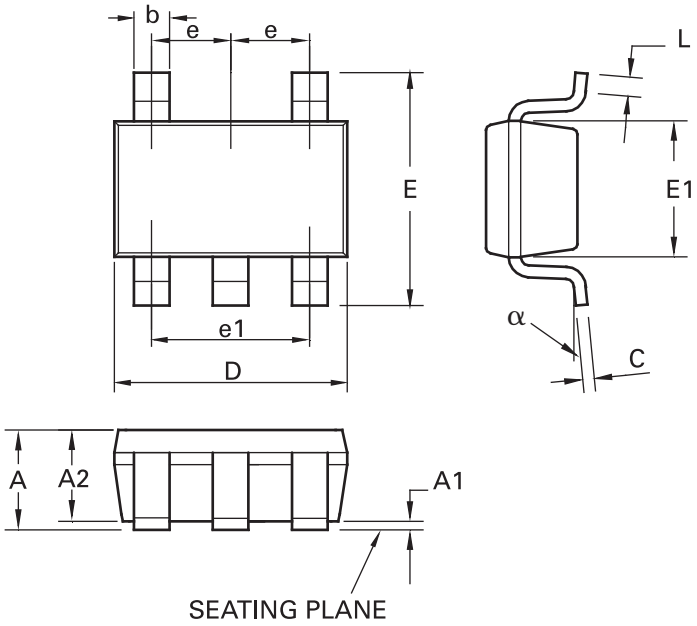

Dim.	Millimeters		Inches		Dim.	Millimeters		Inches	
	Min.	Max.	Min.	Max.		Min.	Max.	Max.	Max.
A	0.80	1.10	0.0315	0.0433	E	2.10 BSC		0.0826 BSC	
A1	-	0.10	-	0.0039	E1	1.25 BSC		0.0492 BSC	
A2	0.80	1.00	0.0315	0.0039	e	0.65 BSC		0.0255 BSC	
b	0.15	0.30	0.006	0.0118	e1	1.30 BSC		0.0511 BSC	
C	0.08	0.25	0.0031	0.0098	L	0.26	0.46	0.010	0.018
D	2.00 BSC		0.0787 BSC		α	0°	8°	0°	8°

Note: Controlling dimensions are in millimeters. Approximate dimensions are provided in inches

© Zetex Semiconductors plc 2007

SOT23-5 Package outline

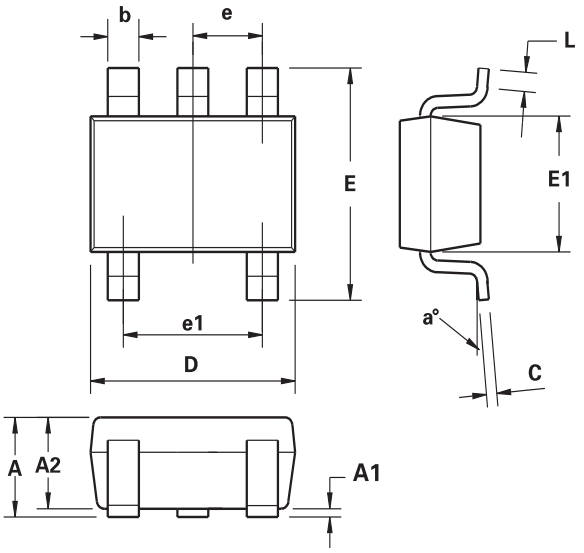

DIM	Millimeters		Inches	
	Min.	Max.	Min.	Max.
A	0.90	1.45	0.0354	0.0570
A1	0.00	0.15	0.00	0.0059
A2	0.90	1.30	0.0354	0.0511
b	0.20	0.50	0.0078	0.0196
C	0.09	0.26	0.0035	0.0102
D	2.70	3.10	0.1062	0.1220
E	2.20	3.20	0.0866	0.1181
E1	1.30	1.80	0.0511	0.0708
e	0.95 REF		0.0374 REF	
e1	1.90 REF		0.0748 REF	
L	0.10	0.60	0.0039	0.0236
a°	0°	30°	0°	30°

Note: Controlling dimensions are in millimeters. Approximate dimensions are provided in inches

© Zetex Semiconductors plc 2007

Intentionally left blank

© Zetex Semiconductors plc 2007

Definitions

Product change

Zetex Semiconductors reserves the right to alter, without notice, specifications, design, price or conditions of supply of any product or service. Customers are solely responsible for obtaining the latest relevant information before placing orders.

Applications disclaimer

The circuits in this design/application note are offered as design ideas. It is the responsibility of the user to ensure that the circuit is fit for the user's application and meets with the user's requirements. No representation or warranty is given and no liability whatsoever is assumed by Zetex with respect to the accuracy or use of such information, or infringement of patents or other intellectual property rights arising from such use or otherwise. Zetex does not assume any legal responsibility or will not be held legally liable (whether in contract, tort (including negligence), breach of statutory duty, restriction or otherwise) for any damages, loss of profit, business, contract, opportunity or consequential loss in the use of these circuit applications, under any circumstances.

Life support

Zetex products are specifically not authorized for use as critical components in life support devices or systems without the express written approval of the Chief Executive Officer of Zetex Semiconductors plc. As used herein:

A. Life support devices or systems are devices or systems which:
   1. are intended to implant into the body

or

   2. support or sustain life and whose failure to perform when properly used in accordance with instructions for use provided in the labelling can be reasonably expected to result in significant injury to the user.

B. A critical component is any component in a life support device or system whose failure to perform can be reasonably expected to cause the failure of the life support device or to affect its safety or effectiveness.

Reproduction

The product specifications contained in this publication are issued to provide outline information only which (unless agreed by the company in writing) may not be used, applied or reproduced for any purpose or form part of any order or contract or be regarded as a representation relating to the products or services concerned.

Terms and Conditions

All products are sold subjects to Zetex' terms and conditions of sale, and this disclaimer (save in the event of a conflict between the two when the terms of the contract shall prevail) according to region, supplied at the time of order acknowledgement.

For the latest information on technology, delivery terms and conditions and prices, please contact your nearest Zetex sales office.

Quality of product

Zetex is an ISO 9001 and TS16949 certified semiconductor manufacturer.

To ensure quality of service and products we strongly advise the purchase of parts directly from Zetex Semiconductors or one of our regionally authorized distributors. For a complete listing of authorized distributors please visit: **www.zetex.com/salesnetwork**

Zetex Semiconductors does not warrant or accept any liability whatsoever in respect of any parts purchased through unauthorized sales channels.

ESD (Electrostatic discharge)

Semiconductor devices are susceptible to damage by ESD. Suitable precautions should be taken when handling and transporting devices. The possible damage to devices depends on the circumstances of the handling and transporting, and the nature of the device. The extent of damage can vary from immediate functional or parametric malfunction to degradation of function or performance in use over time. Devices suspected of being affected should be replaced.

Green compliance

Zetex Semiconductors is committed to environmental excellence in all aspects of its operations which includes meeting or exceeding regulatory requirements with respect to the use of hazardous substances. Numerous successful programs have been implemented to reduce the use of hazardous substances and/or emissions.

All Zetex components are compliant with the RoHS directive, and through this it is supporting its customers in their compliance with WEEE and ELV directives.

Product status key:

"Preview"	Future device intended for production at some point. Samples may be available
"Active"	Product status recommended for new designs
"Last time buy (LTB)"	Device will be discontinued and last time buy period and delivery is in effect
"Not recommended for new designs"	Device is still in production to support existing designs and production
"Obsolete"	Production has been discontinued

Datasheet status key:

"Draft version"	This term denotes a very early datasheet version and contains highly provisional information, which may change in any manner without notice.
"Provisional version"	This term denotes a pre-release datasheet. It provides a clear indication of anticipated performance. However, changes to the test conditions and specifications may occur, at any time and without notice.
"Issue"	This term denotes an issued datasheet containing finalized specifications. However, changes to specifications may occur, at any time and without notice.

Zetex sales offices

Europe	**Americas**	**Asia Pacific**	**Corporate Headquarters**
Zetex GmbH Kustermann-park Balanstraße 59 D-81541 München Germany	Zetex Inc 700 Veterans Memorial Highway Hauppauge, NY 11788 USA	Zetex (Asia Ltd) 3701-04 Metroplaza Tower 1 Hing Fong Road, Kwai Fong Hong Kong	Zetex Semiconductors plc Zetex Technology Park, Chadderton Oldham, OL9 9LL United Kingdom
Telefon: (49) 89 45 49 49 0 Fax: (49) 89 45 49 49 49 europe.sales@zetex.com	Telephone: (1) 631 360 2222 Fax: (1) 631 360 8222 usa.sales@zetex.com	Telephone: (852) 26100 611 Fax: (852) 24250 494 asia.sales@zetex.com	Telephone: (44) 161 622 4444 Fax: (44) 161 622 4446 hq@zetex.com

© 2007 Published by Zetex Semiconductors plc

© Zetex Semiconductors plc 2007

ENTEGRECİ

Bu belge www.entegreci.com üzerinden sunulmaktadır.

Elektronik komponent tedarikinde Entegreci

Entegreci, Eskişehir merkezli, Türkiye geneline satış yapan bir elektronik komponent mağazasıdır. Entegreler (IC), mikrodenetleyiciler, transistörler, diyotlar, pasif elemanlar, konnektörler, modüller ve geliştirme kartları tek adetten seri üretim adetlerine kadar satılır. Ürün sayfalarında güncel stok durumunu, fiyatı ve datasheet bağlantısını bulabilirsiniz.

Parça koduyla arama

Üretici parça numarasını yazın; stok ve fiyatı hemen görün.

www.entegreci.com

Ürün kategorileri

Entegreden kapasitöre tüm elektronik komponent kategorileri.

Kategorilere göz atın

Üreticiler

Aradığınız üreticinin ürünlerini tek sayfada inceleyin.

Üreticileri görün

Toplu alım ve teklif

Listede olmayan ya da yüksek adetli parçalar için teklif isteyin.

Teklif isteyin

www.entegreci.com | **destek@entegreci.com** | **0850 305 90 34**

Entegreci is an online electronic components store based in Türkiye. Search by manufacturer part number to see stock, prices and datasheets for integrated circuits, microcontrollers, transistors, passive components and connectors, or request a quote for parts that are not listed.

Bu sayfa Entegreci tarafından eklenmiştir. Belgenin önceki sayfaları asıl yayıncısına aittir ve içeriği değiştirilmemiştir; en güncel sürüm için belgenin yayıncısına başvurun.