ZXTR1005PD8

100V INPUT, 5V 50mA VOLTAGE REGULATOR

Description

The ZXTR1005PD8 is a high voltage regulator with fixed output voltage of 5V ± 2% and a 50mA drive capability. It is designed for use in high voltage applications where standard linear regulators cannot be used. This function is fully integrated into a PowerDI5060 package, minimizing PCB area and reducing number of components when compared with a multi-chip discrete solution.

The device also features an enable pin which disables the regulator when pulled low.

Applications

Supply voltage regulation in:

- Networking
- Telecom
- Power Over Ethernet (PoE)

Features

- Series Linear Regulator Using Emitter-Follower Stage
- Input Voltage = 10 to 100V
- Output Voltage = 5V ± 2%
- ± 4% tolerance over -55 to +125°C
- Output Current up to 50mA
- Toggle Output On/Off with Enable pin
- **Totally Lead-Free & Fully RoHS compliant (Notes 1 & 2)**
- **Halogen and Antimony Free. "Green" Device (Note 3)**

Mechanical Data

- Case: PowerDI5060-8 Type B
- Case material: Molded Plastic. "Green" Molding Compound.
- UL Flammability Rating 94V-0
- Moisture Sensitivity: Level 1 per J-STD-020
- Terminals: Finish - Matte Tin Plated Leads, Solderable per MIL-STD-202, Method 208 e3
- Weight: 0.104 grams (approximate)

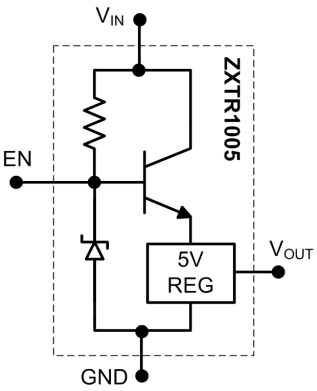

Internal Device Schematic

PowerDI5060-8 Type B



Top View

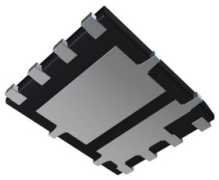

Bottom View

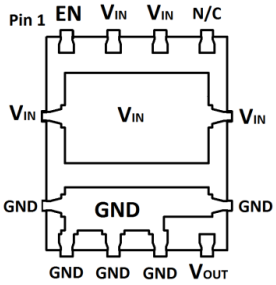

Bottom View
Pin-Out

Pin Name	Pin Function
V_{IN}	Input Supply
GND	Power Ground
V_{OUT}	Voltage Output
EN	Enable
N/C	Not Connected

Ordering Information (Note 4)

Product	Package	Marking	Reel Size (inches)	Tape Width (mm)	Quantity per Reel
ZXTR1005PD8-13	PowerDI5060-8 Type B	ZXTR 1005	13	12	2,500

Notes:
1. No purposely added lead. Fully EU Directive 2002/95/EC (RoHS) & 2011/65/EU (RoHS 2) compliant.
2. See http://www.diodes.com/quality/lead_free.html for more information about Diodes Incorporated's definitions of Halogen and Antimony free, "Green" and Lead-Free.
3. Halogen- and Antimony-free "Green" products are defined as those which contain <900ppm bromine, <900ppm chlorine (<1500ppm total Br + Cl) and <1000ppm antimony compounds.
4. For packaging details, go to our website at http://www.diodes.com/products/packages.html.

Marking Information

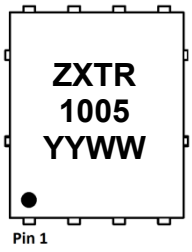

ZXTR1005 = Product Type Marking Code
YYWW = Date Code Marking
YY = Year (ex: 13 = 2013)
WW = Week (01-52)

© Diodes Incorporated

Absolute Maximum Ratings (Voltage relative to GND, @ T_A = +25°C, unless otherwise specified.)

Characteristic	Symbol	Value	Unit
Input voltage	V_{IN}	-0.3 to +100	V
Enable current	I_{EN}	±1	mA
Continuous Input & Output Current	I_{IN}, I_{OUT}	100	mA
Peak Pulsed Input & Output Current	I_{IM}, I_{OM}	100	mA
Maximum Voltage applied to V_{OUT}	$V_{OUT(max)}$	10	V

Maximum Current (@ V_{IN} = 48V, T_A = +25°C, unless otherwise specified.)

Characteristic		Symbol	Value	Unit
Continuous Output Current	(Note 7)	I_{OUT}	42	mA
Pulsed Output Current	(Note 8)	I_{OM}	100	mA
	(Note 9)		100	

Thermal Characteristics (@T_A = +25°C, unless otherwise specified.)

Characteristic		Symbol	Value	Unit
Power Dissipation	(Note 5)	P_D	1.84	W
	(Note 6)		0.94	
Thermal Resistance, Junction to Ambient	(Note 5)	$R_{\theta JA}$	54.3	°C/W
	(Note 6)		106.4	
Thermal Resistance, Junction to Lead	(Note 10)	$R_{\theta JL}$	13	
Thermal Resistance, Junction to Case	(Note 10)	$R_{\theta JC}$	13.9	
Maximum Operating Junction Temperature Range		T_J	-55 to +125	°C
Storage Temperature Range		T_{STG}	-65 to +150	°C

ESD Ratings (Note 11)

Characteristics	Symbols	Value	Unit	JEDEC Class
Electrostatic Discharge – Human Body Model	ESD HBM	4,000	V	3A
Electrostatic Discharge – Machine Model	ESD MM	400	V	C

Notes:
5. For a device mounted with the exposed V_{IN} pad on 50mm x 50mm 1oz copper that is on a single-sided 1.6mm FR4 PCB; device is measured under still air conditions whilst operating in steady-state.
6. Same as note 5, except mounted on 15mm x 15mm 1oz copper.
7. Same as note 5, whilst operating at V_{IN} = 48V this is thermally limited. Refer to Safe Operating Area for other Input Voltages.
8. Same as note 5, except measured with a single pulse width = 100µs and V_{IN} = 48V. This is limited by the absolute maximum I_{OM} rating.
9. Same as note 5, except measured with a single pulse width = 10ms and V_{IN} = 48V. This is limited by the absolute maximum I_{OM} rating.
10. $R_{\theta JL}$ = Thermal resistance from junction to solder-point (on the exposed V_{IN} pad).
    $R_{\theta JC}$ = Thermal resistance from junction to the top of case.
11. Refer to JEDEC specification JESD22-A114 and JESD22-A115.

© Diodes Incorporated

Thermal Characteristics and Derating Information

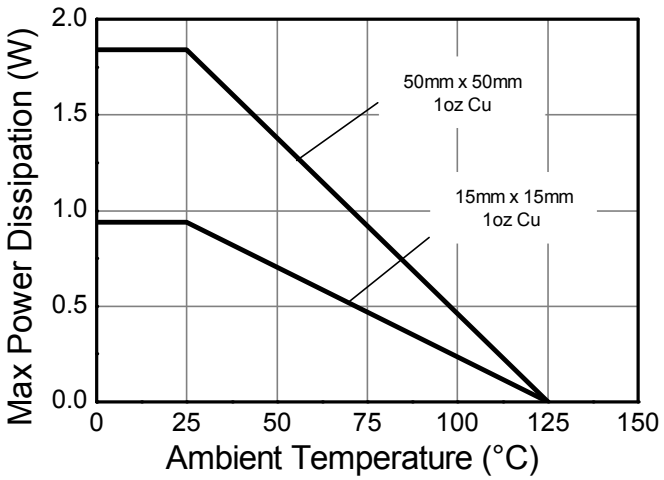

Derating Curve

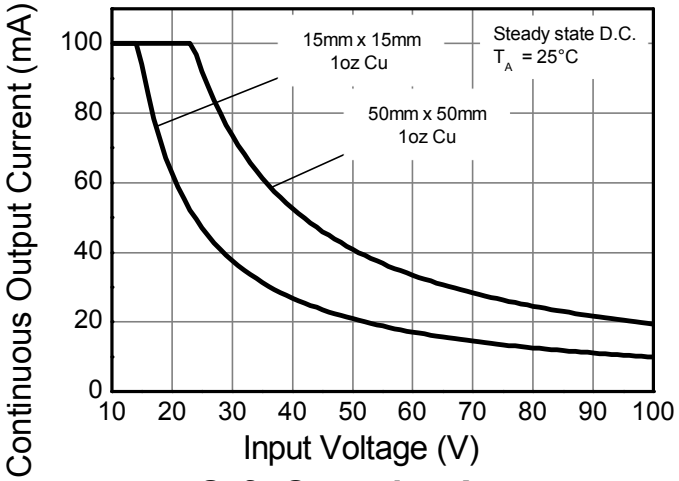

Safe Operating Area

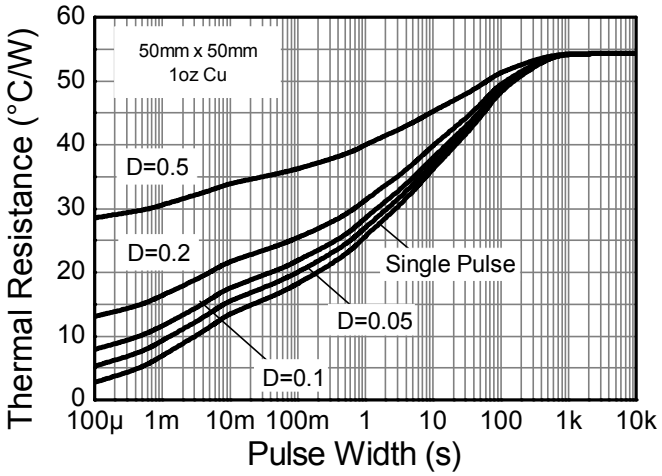

Transient Thermal Impedance

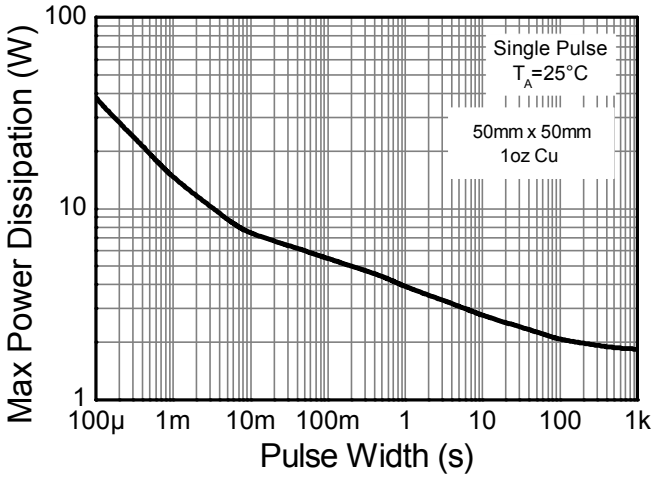

Pulse Power Dissipation

© Diodes Incorporated

Electrical Characteristics (Voltage relative to GND, @T_A = +25°C, unless otherwise specified.)

Enable Output with EN =OPEN (i.e. -100nA < I_{EN} < 100nA)

Characteristic	Symbol	Min	Typ	Max	Unit	Test Condition
Output Voltage (Note 12)	V_{OUT}	4.9	5.0	5.1	V	V_{IN} = 48V, I_{OUT} = 15mA
Line Regulation (Note 12 & 13)	ΔV_{OUT}	-10	2	10	mV	V_{IN} = 10 to 100V, I_{OUT} = 15mA
Average Temperature Coefficient	$\Delta V_{OUT}/\Delta T$	—	0.44	0.7	mV/°C	T_J = -55°C to +125°C V_{IN} = 48V, I_{OUT} = 15mA
Load Regulation (Note 12 & 14)	ΔV_{OUT}	—	20	50	mV	I_{OUT} = 0.1 to 50mA, V_{IN} = 48V
Minimum Value of Input Voltage Required to Maintain Line Regulation	$V_{IN(MIN)}$	10	—	—	V	—
Power Supply Rejection Ratio	$\Delta V_{IN}/\Delta V_{OUT}$	—	57	—	dB	C_{OUT} = 100nF, I_{OUT} = 15mA, V_{OUT} = 5V, V_{IN} = 10 to 100V,f = 100Hz
Toggle Output On/Off						
Enable Output	V_{OUT}	4.9	5.0	5.1	V	EN = OPEN, -100nA < I_{EN} <100nA, V_{IN} = 48V, I_{OUT} = 15mA
Disable Output	V_{OUT}	—	0	1	V	EN = GND, -0.3V < V_{EN} < 1V, V_{IN} = 48V, I_{OUT} = 100nA
Quiescent Current (Note 12) with Enable Output	I_Q	—	300 650	500 900	µA	EN = OPEN, V_{IN} = 48V EN = OPEN, V_{IN} = 100V
Quiescent Current (Note 12) with Disable Output	I_Q	—	300 650	500 900	µA	EN = GND, V_{IN} = 48V EN = GND, V_{IN} = 100V

Notes: 12. Measured under pulsed conditions. Pulse width ≤ 300µs. Duty cycle ≤ 2%.
13. Line regulation ΔV_{OUT} = V_{OUT}(@ V_{IN} = 100V) – V_{OUT}(@ V_{IN} = 10V)
14. Load regulation ΔV_{OUT} = V_{OUT}(@ I_{OUT} = 50mA) – V_{OUT}(@ I_{OUT} = 0mA)

Pin Functions

Pin Name	Pin Function	Notes	
V_{IN}	Input Supply	To maintain output regulation the input voltage can vary from 10V to 100V with respect to the GND pin. It is recommended to connect a 1µF capacitor to GND.	
GND	Power Ground	This pin should be tied to the system ground.	
V_{OUT}	Voltage Output	Outputs a regulated 5V when drawing between 0.1 to 50mA current. It is recommended to connect a ≥100nF capacitor to GND to minimize the noise on the regulated output. The pin can be pulled high to a maximum of 10V with respect to ground.	
EN	Enable Output	**Output Always On** When the output state is required to be permanently on, then the EN pin should be left floating in an OPEN state.	EN pin = Do not connect
		Toggle Output On/Off Toggle the regulator's output state between on (5V) and off (0V). **Enable Output** Leave the EN pin floating in an OPEN state. **Disable Output** Pull the EN pin to GND in a SHORT state. For example, see the Typical Application Circuit showing a transistor toggling the EN pin.	**Enable Output** EN pin = -100nA < I_{EN} <100nA **Disable Output** EN pin = -0.3V < V_{EN} < 1V

© Diodes Incorporated

Typical Application Circuit

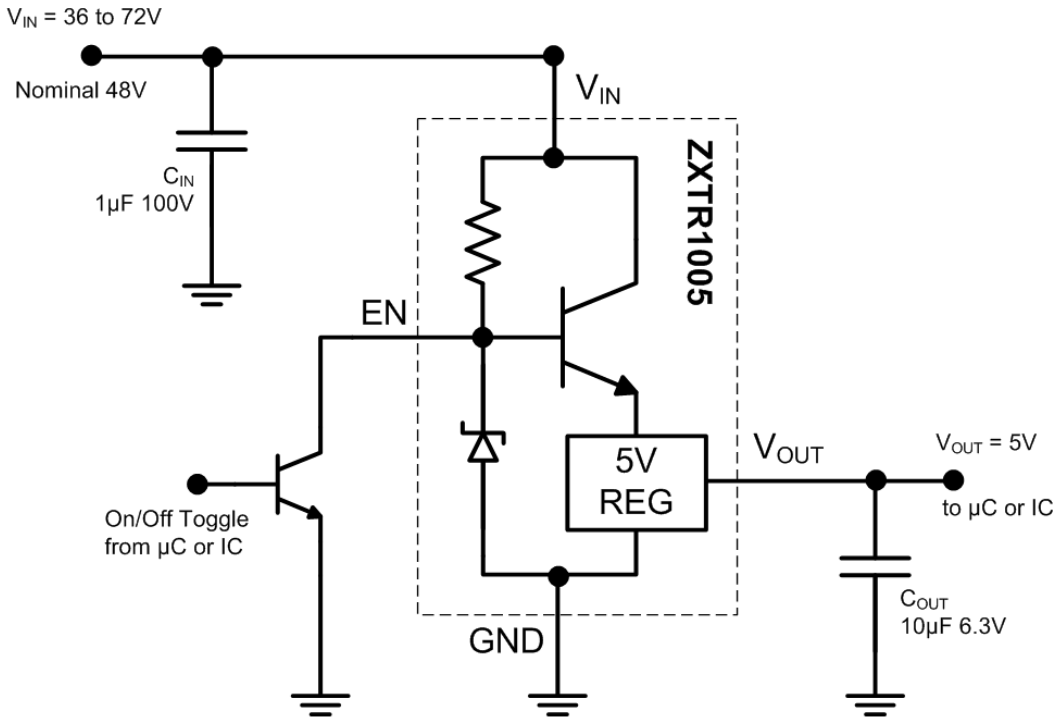

Example of a 5V regulated supply from a nominal 48V for powering a Controller IC.

© Diodes Incorporated

Typical Electrical Characteristics (@T_A = +25°C, unless otherwise specified.)

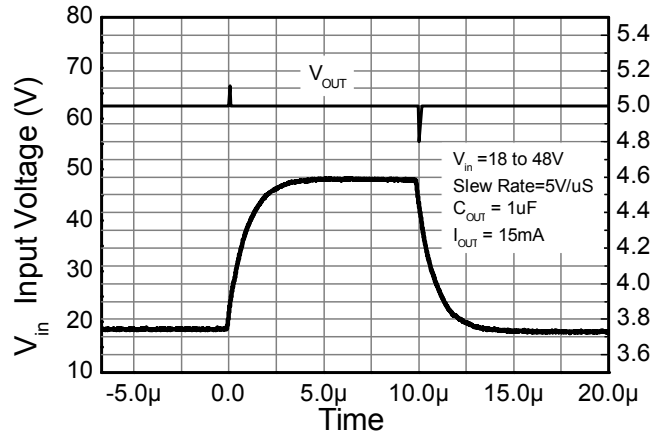

Line transient response

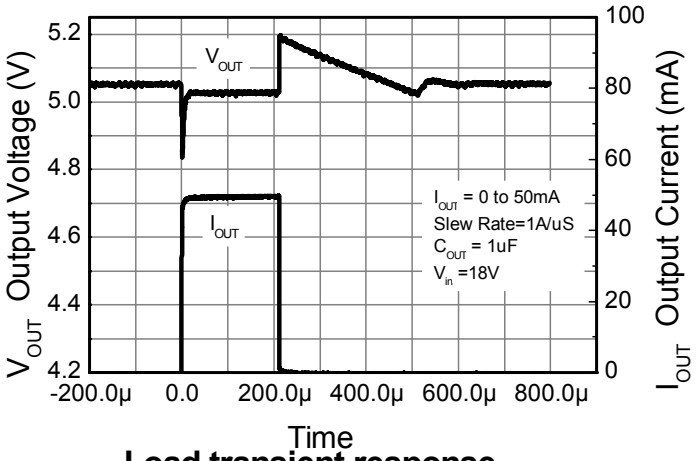

Load transient response

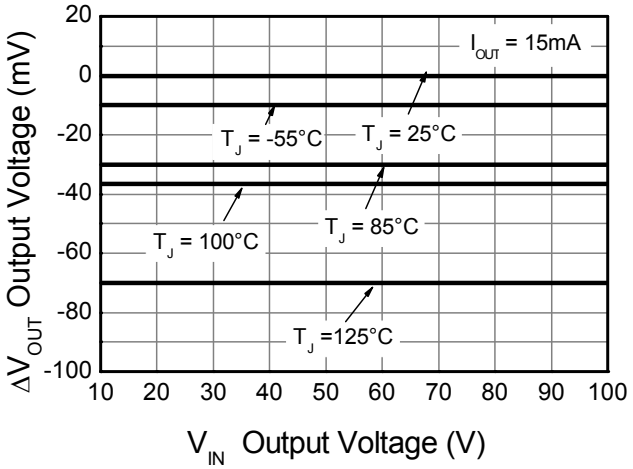

Line Regulation (Note 15)

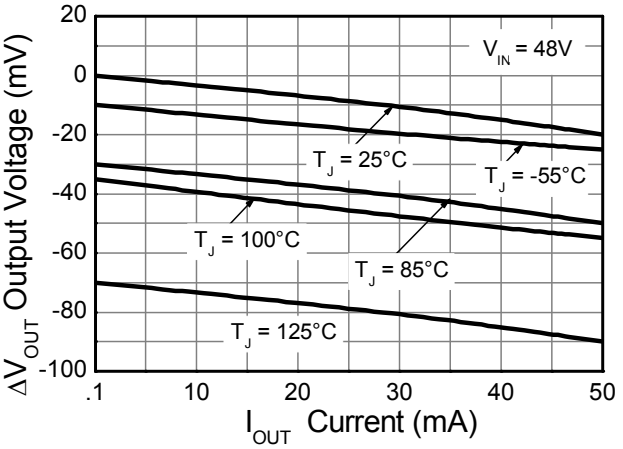

Load Regulation (Note 16)

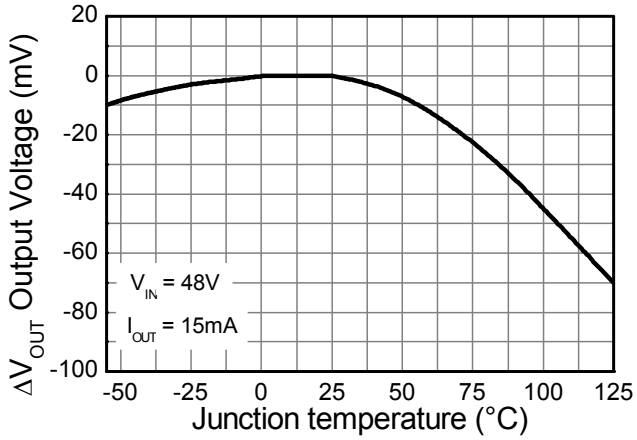

Temperature Coefficient (Note 17)

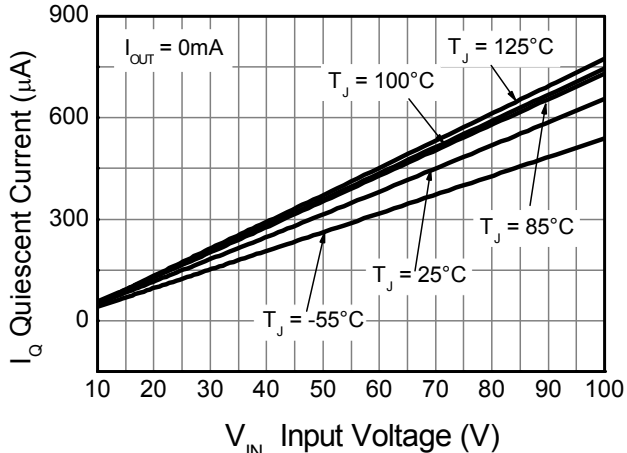

Quiescent Current

Notes: 15. Line regulation $\Delta V_{OUT} = V_{OUT} – V_{OUT}$(@ V_{IN} = 10V, I_{OUT} = 15mA, T_J = +25°C)
16. Load regulation $\Delta V_{OUT} = V_{OUT} – V_{OUT}$(@ V_{IN} = 48V, I_{OUT} = 0A, T_J = +25°C)
17. Temperature Coefficient $\Delta V_{OUT} = V_{OUT} – V_{OUT}$(@ V_{IN} = 48V, I_{OUT} = 30mA, T_J = +25°C)

© Diodes Incorporated

Package Outline Dimensions

Please see AP02002 at http://www.diodes.com/datasheets/ap02002.pdf for latest version.

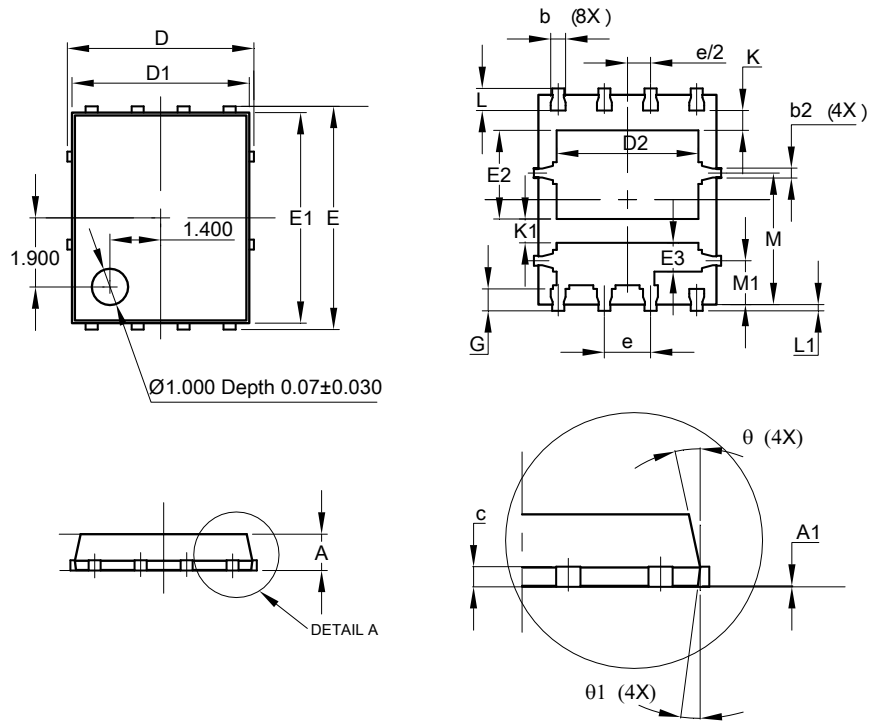

POWERDI®5060-8 TYPE B			
Dim	**Min**	**Max**	**Typ**
A	0.90	1.10	1.00
A1	0.00	0.05	—
b	0.33	0.51	0.41
b2	0.20	0.40	0.273
c	0.230	0.330	0.273
D	5.15 BSC		
D1	4.70	5.10	4.90
D2	3.50	4.40	3.90
E	6.15 BSC		
E1	5.60	6.00	5.80
E2	2.25	2.65	2.45
E3	0.595	0.995	0.795
e	1.27 BSC		
G	0.51	0.71	0.61
K	0.51	—	—
K1	0.51	—	—
L	0.51	0.71	0.61
L1	0.05	0.20	0.175
M	3.235	4.035	3.635
M1	1.00	1.40	1.21
θ1	10°	12°	11°
θ2	6°	8°	7°
All Dimensions in mm			

Suggested Pad Layout

Please see AP02001 at http://www.diodes.com/datasheets/ap02001.pdf for the latest version.

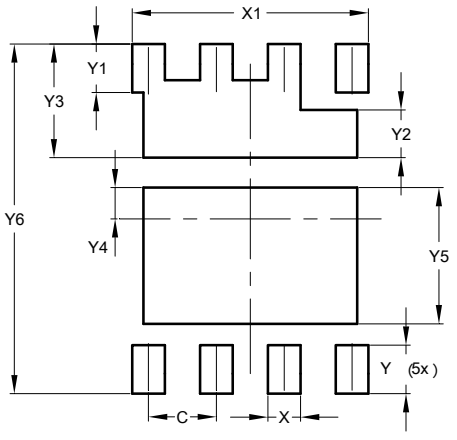

Dimensions	Value (in mm)
C	1.270
X	0.610
X1	4.420
Y	0.910
Y1	0.910
Y2	0.895
Y3	2.130
Y4	0.585
Y5	2.550
Y6	6.550

© Diodes Incorporated

IMPORTANT NOTICE

DIODES INCORPORATED MAKES NO WARRANTY OF ANY KIND, EXPRESS OR IMPLIED, WITH REGARDS TO THIS DOCUMENT, INCLUDING, BUT NOT LIMITED TO, THE IMPLIED WARRANTIES OF MERCHANTABILITY AND FITNESS FOR A PARTICULAR PURPOSE (AND THEIR EQUIVALENTS UNDER THE LAWS OF ANY JURISDICTION).

Diodes Incorporated and its subsidiaries reserve the right to make modifications, enhancements, improvements, corrections or other changes without further notice to this document and any product described herein. Diodes Incorporated does not assume any liability arising out of the application or use of this document or any product described herein; neither does Diodes Incorporated convey any license under its patent or trademark rights, nor the rights of others. Any Customer or user of this document or products described herein in such applications shall assume all risks of such use and will agree to hold Diodes Incorporated and all the companies whose products are represented on Diodes Incorporated website, harmless against all damages.

Diodes Incorporated does not warrant or accept any liability whatsoever in respect of any products purchased through unauthorized sales channel. Should Customers purchase or use Diodes Incorporated products for any unintended or unauthorized application, Customers shall indemnify and hold Diodes Incorporated and its representatives harmless against all claims, damages, expenses, and attorney fees arising out of, directly or indirectly, any claim of personal injury or death associated with such unintended or unauthorized application.

Products described herein may be covered by one or more United States, international or foreign patents pending. Product names and markings noted herein may also be covered by one or more United States, international or foreign trademarks.

LIFE SUPPORT

Diodes Incorporated products are specifically not authorized for use as critical components in life support devices or systems without the express written approval of the Chief Executive Officer of Diodes Incorporated. As used herein:

A. Life support devices or systems are devices or systems which:

1. are intended to implant into the body, or

2. support or sustain life and whose failure to perform when properly used in accordance with instructions for use provided in the labeling can be reasonably expected to result in significant injury to the user.

B. A critical component is any component in a life support device or system whose failure to perform can be reasonably expected to cause the failure of the life support device or to affect its safety or effectiveness.

Customers represent that they have all necessary expertise in the safety and regulatory ramifications of their life support devices or systems, and acknowledge and agree that they are solely responsible for all legal, regulatory and safety-related requirements concerning their products and any use of Diodes Incorporated products in such safety-critical, life support devices or systems, notwithstanding any devices- or systems-related information or support that may be provided by Diodes Incorporated. Further, Customers must fully indemnify Diodes Incorporated and its representatives against any damages arising out of the use of Diodes Incorporated products in such safety-critical, life support devices or systems.

Copyright © 2014, Diodes Incorporated

www.diodes.com

ENTEGRECİ

Bu belge www.entegreci.com üzerinden sunulmaktadır.

Elektronik komponent tedarikinde Entegreci

Entegreci, Eskişehir merkezli, Türkiye geneline satış yapan bir elektronik komponent mağazasıdır. Entegreler (IC), mikrodenetleyiciler, transistörler, diyotlar, pasif elemanlar, konnektörler, modüller ve geliştirme kartları tek adetten seri üretim adetlerine kadar satılır. Ürün sayfalarında güncel stok durumunu, fiyatı ve datasheet bağlantısını bulabilirsiniz.

Parça koduyla arama

Üretici parça numarasını yazın; stok ve fiyatı hemen görün.

www.entegreci.com

Ürün kategorileri

Entegreden kapasitöre tüm elektronik komponent kategorileri.

Kategorilere göz atın

Üreticiler

Aradığınız üreticinin ürünlerini tek sayfada inceleyin.

Üreticileri görün

Toplu alım ve teklif

Listede olmayan ya da yüksek adetli parçalar için teklif isteyin.

Teklif isteyin

www.entegreci.com | **destek@entegreci.com** | **0850 305 90 34**

Entegreci is an online electronic components store based in Türkiye. Search by manufacturer part number to see stock, prices and datasheets for integrated circuits, microcontrollers, transistors, passive components and connectors, or request a quote for parts that are not listed.

Bu sayfa Entegreci tarafından eklenmiştir. Belgenin önceki sayfaları asıl yayıncısına aittir ve içeriği değiştirilmemiştir; en güncel sürüm için belgenin yayıncısına başvurun.