Single-Output LDO Regulators

30V Voltage Resistance 0.1A LDO Regulators

BDxxFA1FP3 series

●General Description

BDxxFA1FP3 series are LDO regulators with output current capability of 0.1A. The output voltages are 3.3V, 5.0V, 5.4V, and 12.0V with ±1% accuracy. The SOT89-3K package is most suitable for heat dissipation. As protective function to prevent IC from destruction, this chip has built-in over current protection circuit to protect the device when output is shorted, and built-in thermal shutdown circuit to protect the IC during thermal over load conditions. This product can be used in wide variety of digital appliances. These regulators can use ceramic capacitor, which have smaller size and longer life than other capacitors.

●Features

- High accuracy output voltage ±1.0%
- Built-in Over current protection circuit (OCP)
- Built-in Temperature protection circuit (TSD)
- Soft start function

●Package

	W(Typ)	D(Typ)	H(Max)
SOT89-3K	4.50mm	x 4.095mm	x 1.60mm



●Key Features

- Input power supply voltage range: Vo+3.0V to 25.0V
- Output voltage: 3.3V, 5.0V, 5.4V, 12.0V
- Output current: 0.1A (Max)
- Operating temperature range: Ta= -25°C to +85°C

●Typical Application Circuit

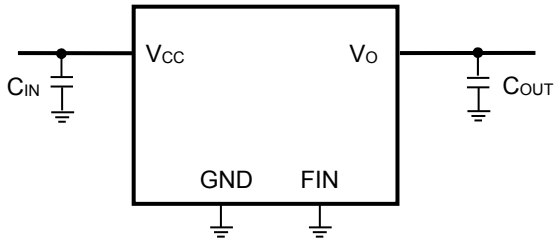

CIN,COUT : Ceramic Capacitor

●Ordering Information

B D x x F A 1 F P 3 - Z T L

Part Number	Output voltage	Input Voltage	Output Current	Package	Manufacturing Code	Packaging and forming specification
	33: 3.3V 50: 5.0V 54: 5.4V J2: 12V	F:30V	A1:0.1A	FP3:SOT89-3K		TL : Emboss tape reel

○ Product structure : Silicon monolithic integrated circuit ○This product is not designed to have protection against radioactive rays.

© 2016 ROHM Co., Ltd. All rights reserved.

●**Block Diagram**

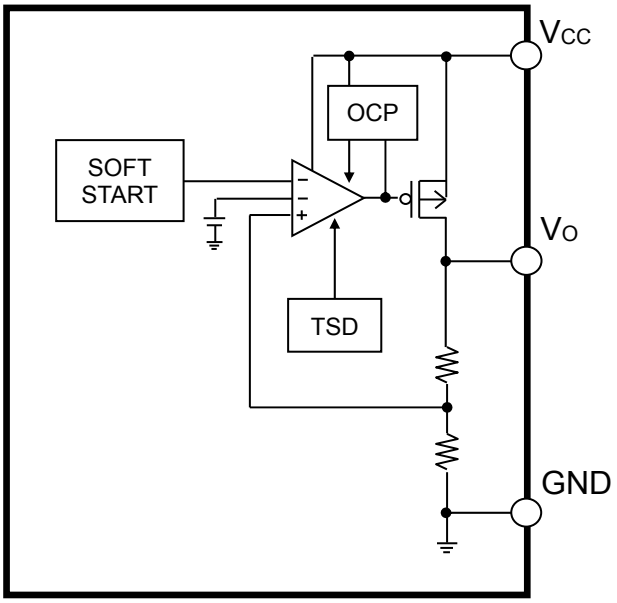

Figure. 1 Block Diagram

●**Pin Configuration**

SOT89-3K
(TOP VIEW)

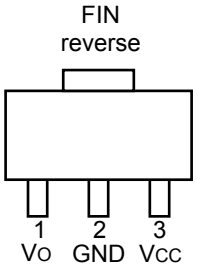

●**Pin Description**

Pin No.	Pin name	Pin Function
1	Vo	Output pin
2	GND	GND pin
3	Vcc	Input pin
reverse	FIN	GND (Connected to 2pin)

© 2016 ROHM Co., Ltd. All rights reserved.

●Absolute Maximum Ratings (Ta=25°C)

Parameter		Symbol	Limits	Unit
Power supply voltage		V_{CC}	-0.3 to +30.0 *1	V
Output voltage		Vo	-0.3 to +18	V
Power dissipation	SOT89-3K	Pd*2	1.67 *2	W
Operating temperature range		Ta	-25 to +85	°C
Storage temperature range		Tstg	-55 to +150	°C
Maximum junction temperature		Tjmax	+150	°C

*1 Not to exceed Pd.
*2 In case Ta≧25°C (114.3mm × 76.2mm × 1.6mm when mounted on a 4-layer PCB based on JEDEC) is reduced by 13.4mW/°C

●Recommended Operating Conditions (Ta=25°C)

Parameter	Symbol	Min.	Max.	Unit
Input power supply voltage	V_{CC}	Vo+3.0	25.0	V
Output current	I_O	0.0	0.1	A

●Recommended Operating Condition

Parameter	Symbol	Min	Typ	Max	Unit	Conditions
Output Capacitor	C_{OUT}	0.3 *3	1.0	-	μF	Ceramic capacitor recommended

*3 The minimum value of capacitor must met this specification over full operating conditions. (Ex: Temperature, DC bias)

●Electrical Characteristics (Unless otherwise specified, Vcc= Vo+5V, Ta=25°C)

Parameter	Symbol	Limits			Unit	Conditions
		Min.	Typ.	Max.		
Bias current	I_{CC}	-	300	450	μA	I_O=0A, Vo=3.3V
		-	300	450	μA	I_O=0A, Vo=5.0V
		-	300	450	μA	I_O=0A, Vo=5.4V
		-	400	600	μA	I_O=0A, Vo=12.0V
Line Regulation	Reg.I	-1	0.5	1	%	V_{CC} =(Vo+3V)→25.0V
Load Regulation	Reg I_O	-1.5	0.5	1.5	%	I_O=0→0.1A
Minimum dropout voltage	V_{CO}	-	1.0	3.0	V	I_O=0.1A
Output voltage	V_O	Vo × 0.99	Vo	Vo × 1.01	V	I_O=0A

© 2016 ROHM Co., Ltd. All rights reserved.

●**Performance Curve (Reference Data)**

■ **BD54FA1FP3**

(Unless otherwise specified, Ta=25°C, Vcc=Vo+5V, C_{IN}=C_{OUT}=1µF)

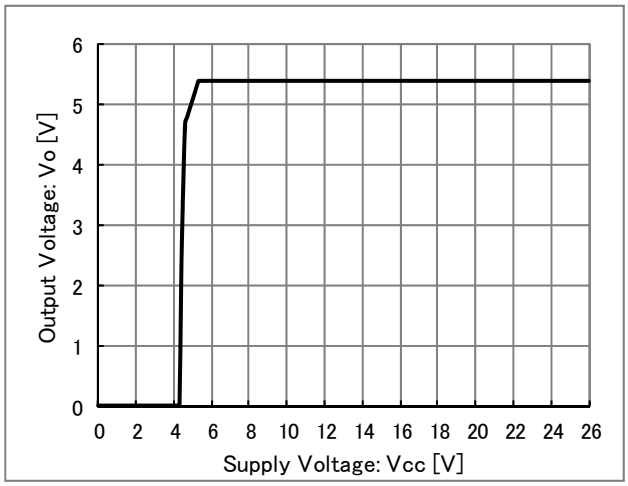

Figure 2. Vcc - Vo

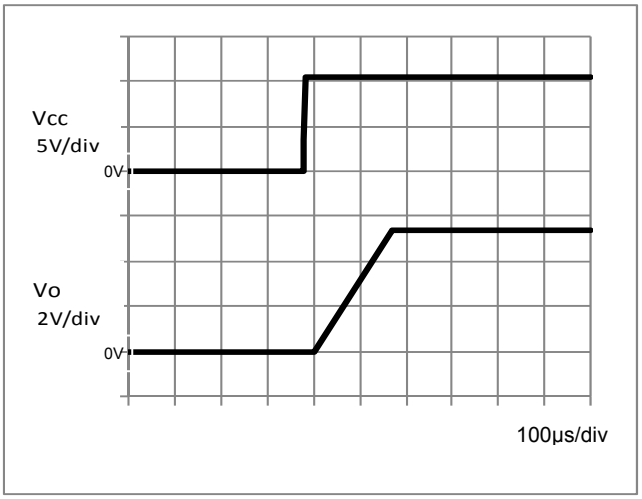

Figure 3. Input sequence
(C_{OUT} = 1µF)

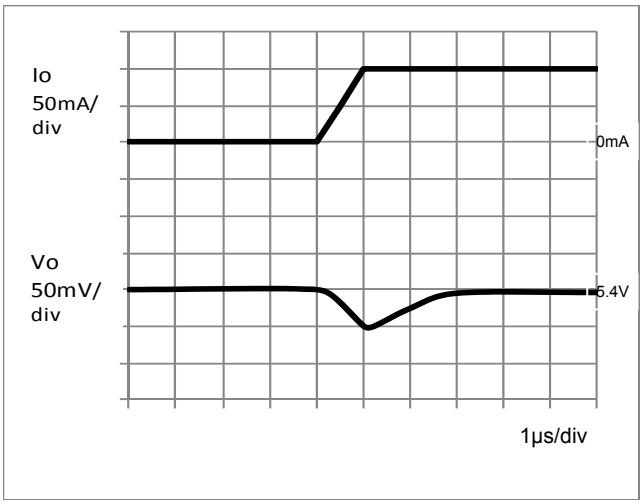

Figure 4. Transient Response
(Io = 0A→0.1A)
(C_{OUT} = 1µF)

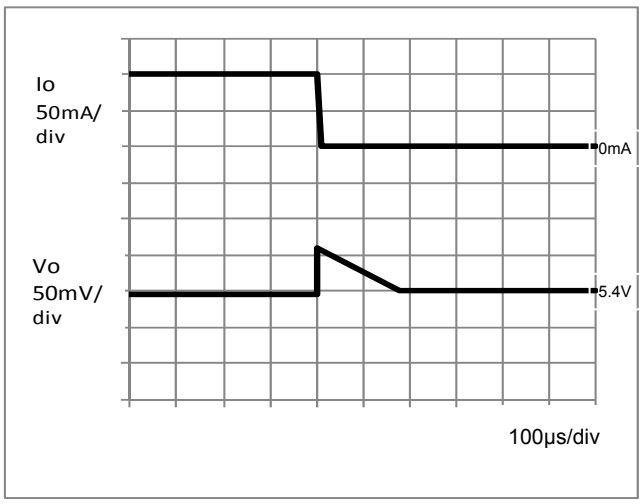

Figure 5. Transient Response
(Io = 0.1A→0A)
(C_{OUT} = 1µF)

© 2016 ROHM Co., Ltd. All rights reserved.

●**Performance Curve (Reference Data)**

■ **BD54FA1FP3**

(Unless otherwise specified, Ta=25°C, Vcc=Vo+5V, C_{IN}=C_{OUT}=1µF)

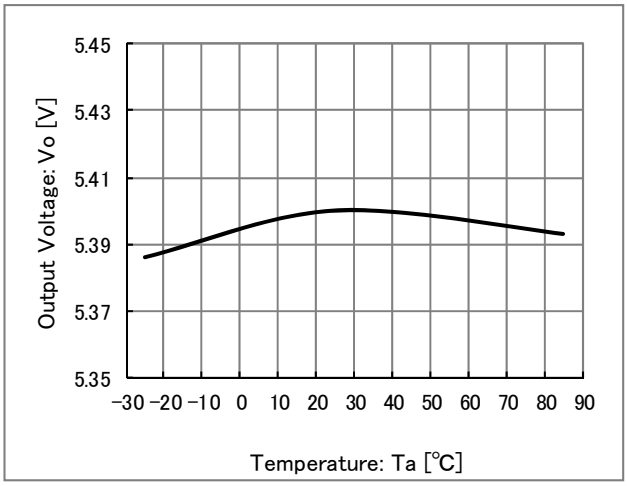

Figure 6. Ta - Vo
(Io = 0mA)

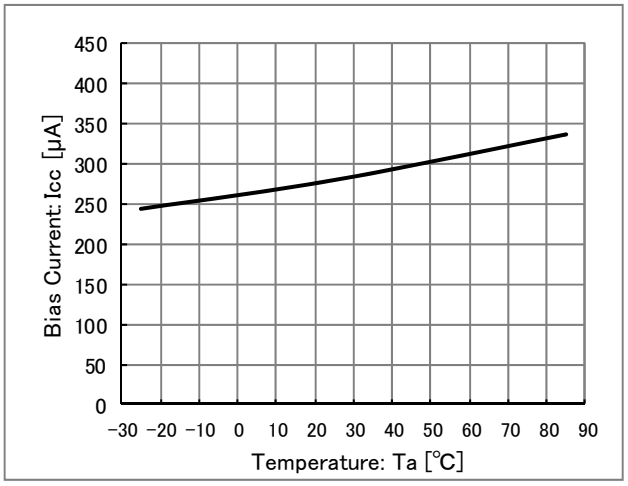

Figure 7. Ta - Icc

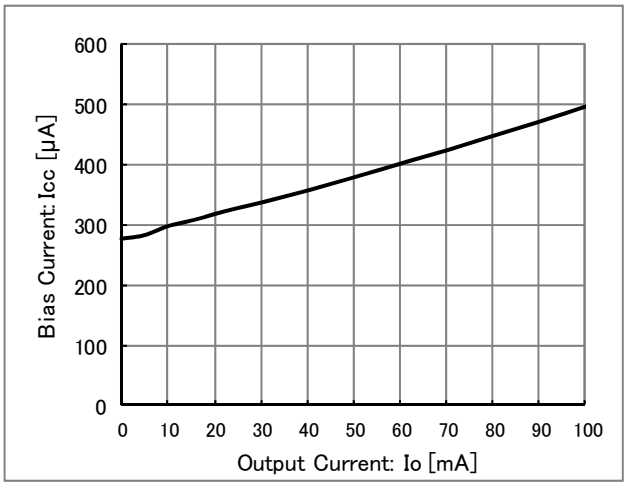

Figure 8. Io - Icc

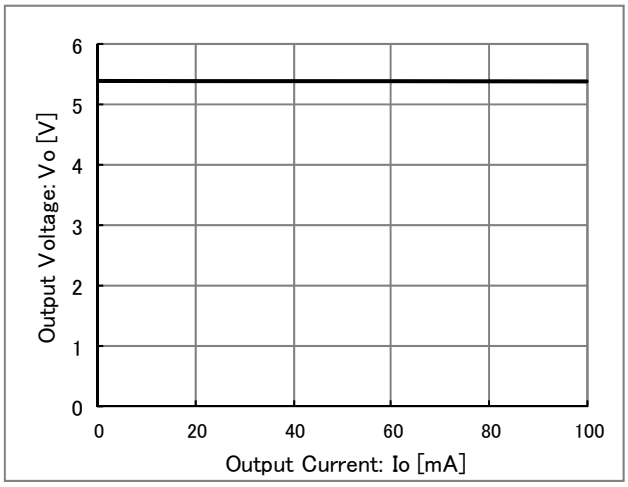

Figure 9. Io - Vo

© 2016 ROHM Co., Ltd. All rights reserved.

●**Performance Curve (Reference Data)**

■ **BD54FA1FP3**

(Unless otherwise specified, Ta=25°C, Vcc=Vo+5V, C_{IN}=C_{OUT}=1µF)

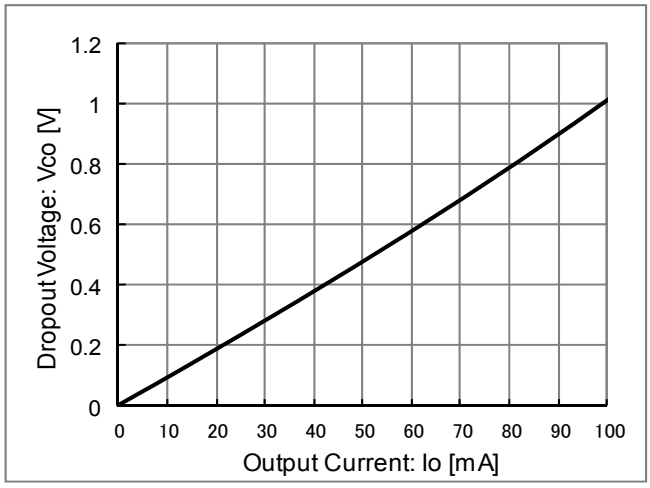

Figure 10. Minimum dropout Voltage

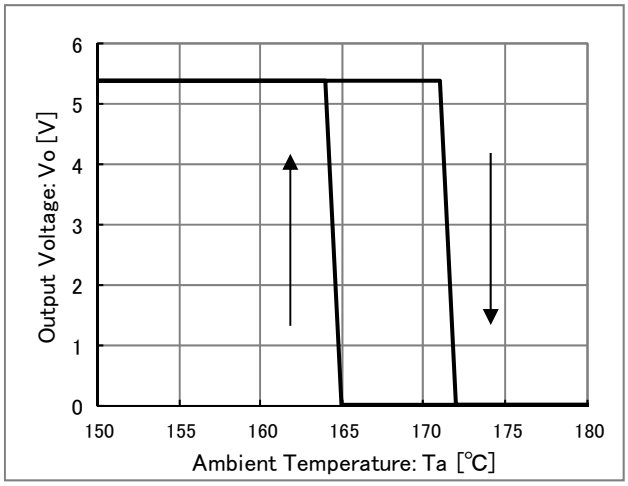

Figure 11. TSD
(Io = 0mA)

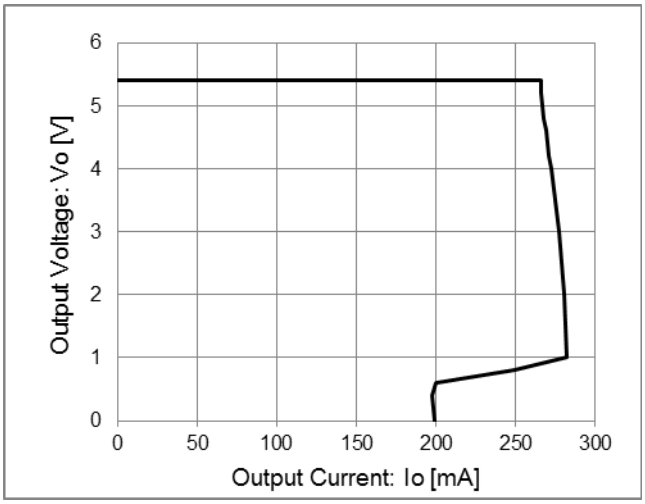

Figure 12. OCP

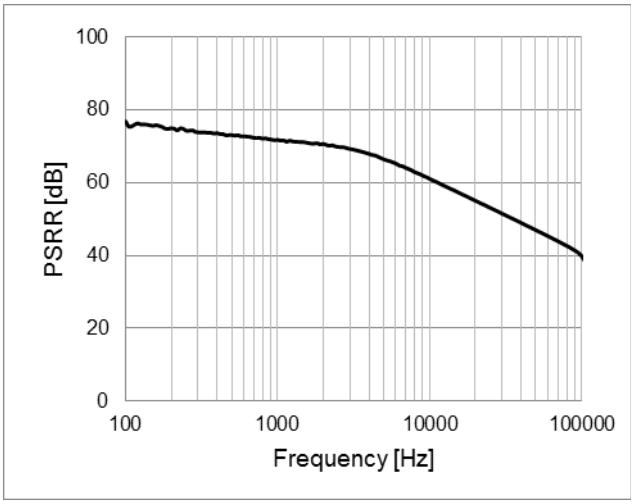

Figure 13. PSRR
(Io = 50mA)

© 2016 ROHM Co., Ltd. All rights reserved.

●**Performance Curve (Reference Data)**

■ **BD54FA1FP3**

(Unless otherwise specified, Ta=25°C, Vcc=10.4V, C_{IN}=C_{OUT}=1μF)

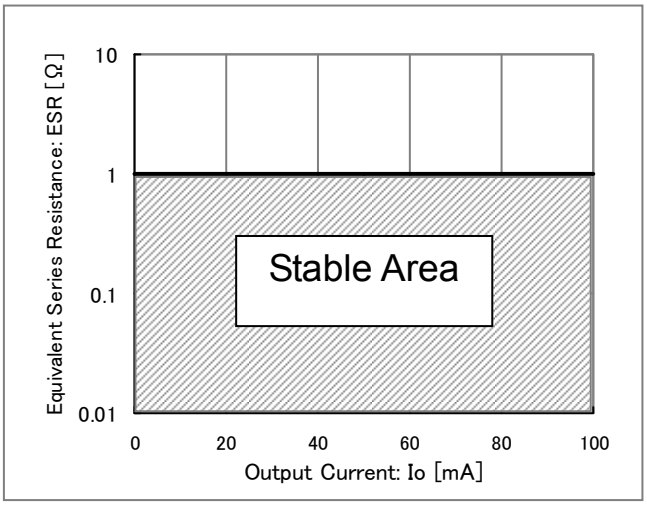

Figure 14. ESR Stable Region

© 2016 ROHM Co., Ltd. All rights reserved.

●**Power Dissipation**

◎SOT89-3K

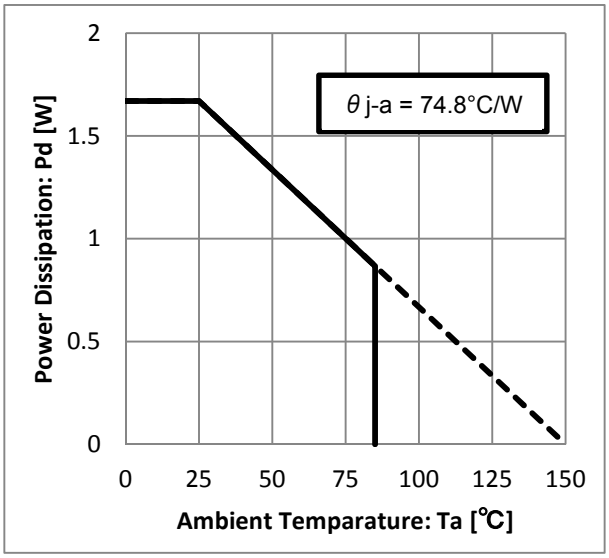

Measurement condition: mounted on 4-layer JEDEC standard board
Board size: 114.3mm × 76.2mm × 1.6mm

When considering thermal design, operation should be maintained within the following conditions.
(The temperature mentioned below is a guaranteed temperature, therefore, margins must be considered.)

1. Ambient temperature Ta is 85°C and below.
2. Junction temperature Tj is 150°C and below.

The junction temperature Tj can be determined as follows:
Calculation based on ambient temperature Ta

$$Tj = Ta + \theta j\text{-}a \times W$$

<Reference Value>
・ θ j-a: SOT89-3K 74.8°C/W JEDEC standard 4 layers PCB
Board size: 114.3mm × 76.2mm × 1.6mm

Most of the heat loss that occurs in BDxxFA1FP3 is generated from the output Pch FET. Power loss is determined by the product of voltage drop across Vcc-Vo and the output current. Check the conditions of output voltage and output current to be used between Vcc-Vo and compare with the power dissipation characteristics.
In addition, power dissipation may change significantly due to board conditions because BDxxFA1FP3 uses power package. It is important to consider the board size to be used before proceeding with the design.

Power consumption [W] = { Input voltage (Vcc) – Output voltage (Vo) } × Output current (Io: Ave)

Example) Vcc = 10.4V, Vo = 5.4V, Io(Average) = 0.1A

Power consumption [W] = (10.4V – 5.4V) × 0.1A

= 0.5W

© 2016 ROHM Co., Ltd. All rights reserved.

●Input/Output Capacitor

It is recommended that a capacitor is placed close to pin between input pin and GND as well as output pin and GND. The input capacitor becomes more necessary when the power supply impedance is high or when the PCB trace has significant length. Moreover, the higher the capacitance of the output capacitor the more stable the output will be, even with load and line voltage variations. However, please check the actual functionality by mounting on a board for the actual application. Also, ceramic capacitors usually have different thermal and equivalent series resistance characteristics and may degrade gradually over continued use.

For additional details, please check with the manufacturer and select the best ceramic capacitor for your application.

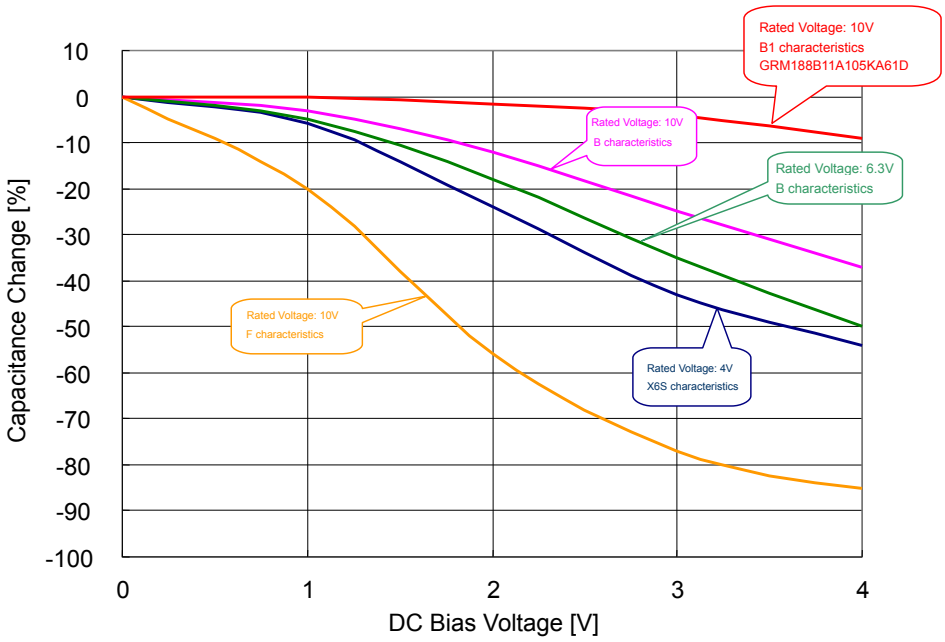

Ceramic Capacitor Capacitance Value - DC Bias Characteristics
(Characteristics Example)

●Output Capacitor Equivalent Series Resistance

To prevent oscillation, please attach a capacitor between V_O and GND. Generally, capacitor has ESR (Equivalent Series Resistance). Operation will be stable in ESR-Io range*1 shown in the right.

The 1.0μF ceramic capacitor and resistor at output in this characteristic data are connected in series and measured. Generally, ESR of ceramic capacitor, tantalum capacitor and electrolytic capacitor is different. Check the ESR of capacitor to be used and use it within the range of stable region.

However, please take note that for the same value of capacitance of different electrolytic capacitor, ESR are not always the same. In addition, ESR characteristics may also change due to wiring impedance of board, input power impedance and load impedance; therefore check the behavior in actual application.

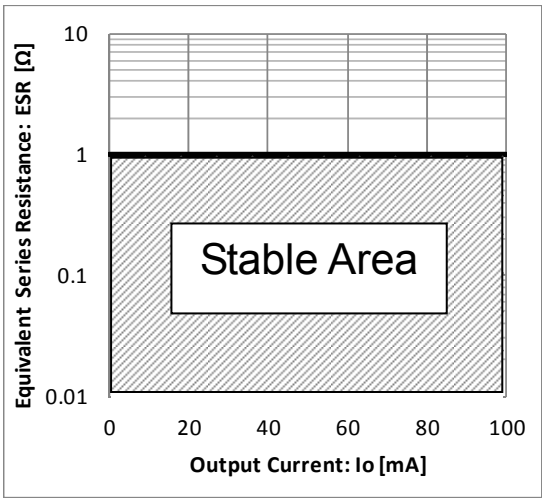

*1 Ta=25°C, Vcc=6.3V to 25V, Io=0A to 0.1A

© 2016 ROHM Co., Ltd. All rights reserved.

●**Input/Output Equivalent Circuit**

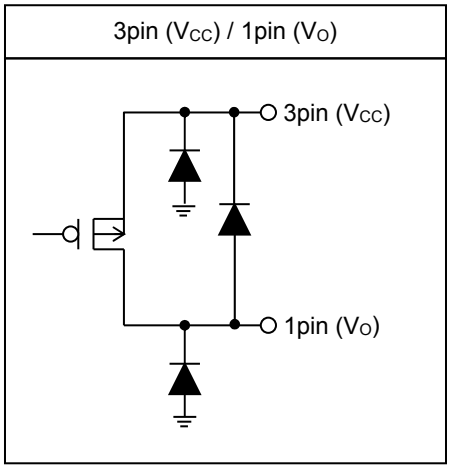

© 2016 ROHM Co., Ltd. All rights reserved.

●Operational Notes

(1) Absolute Maximum Value Rate
Operating the IC over the absolute maximum ratings may damage the IC. In addition, it is impossible to predict all destructive situations such as short-circuit modes, open circuit modes, etc. Therefore, it is important to consider circuit protection measures, like adding a fuse, in case the IC is operated in a special mode exceeding the absolute maximum ratings.

(2) Reverse connection of power supply
Connecting the power supply in reverse polarity can damage the IC. Take precautions against reverse polarity when connecting the power supply, such as mounting an external diode between the power supply and the IC's power supply terminals.

(3) Power supply line
Design the PCB layout pattern to provide low impedance ground and supply lines. Separate the ground and supply lines of the digital and analog blocks to prevent noise in the ground and supply lines of the digital block from affecting the analog block. Furthermore, connect a capacitor to ground at all power supply pins. Consider the effect of temperature and aging on the capacitance value when using electrolytic capacitors.

(4) Ground voltage
The voltage of the ground pin must be the lowest voltage of all pins of the IC at all operating conditions. Ensure that no pins are at a voltage below the ground pin at any time, even during transient condition.

(5) Thermal consideration
Use a thermal design that allows for a sufficient margin by taking into account the permissible power dissipation (Pd) in actual operating conditions.

(6) Short between pins and mounting errors
Be careful when mounting the IC on printed circuit boards. The IC may be damaged if it is mounted in a wrong orientation or if pins are shorted together. Short circuit may be caused be conductive particles caught between the pins.

(7) Operation under strong electromagnetic field
Operating the IC in the presence of a strong electromagnetic field may cause the IC to malfunction.

(8) Thermal shutdown circuit
The IC incorporates a built-in thermal shutdown circuit, which is designed to turn off the IC when the internal temperature of the IC reaches a specified value. It is not designed to protect the IC from damage or guarantee its operation. Do not continue to operate the IC after this function is activated. Do not use the IC in conditions where this function will always be activated.

	TSD ON Temperature [°C] (Typ)	Hysteresis Temperature [°C] (Typ)
BDxxFA1FP3	173	8

(9) Testing on application boards
When testing the IC on an application board, connecting a capacitor directly to a low-impedance output pin may subject the IC to stress. Always discharge capacitors completely after each process or step. The IC's power supply should always be turned off completely before connecting or removing it from the test setup during the inspection process. To prevent damage from electro static discharge, ground the IC during assembly and use similar precautions during transport and storage.

© 2016 ROHM Co., Ltd. All rights reserved.

(10) Regarding input pins of the IC

This monolithic IC contains P+ isolation and P substrate layers between adjacent elements in order to keep them isolated. P-N junctions are formed at the intersection of the P layers with the N layers of other elements, creating a parasitic diode or transistor. For example (refer to figure below):

When GND > Pin A and GND > Pin B, the P-N junction operates as a parasitic diode.
When GND > Pin B, the P-N junction operates as a parasitic transistor.

Parasitic diodes inevitably occur in the structure of the IC. The operation of parasitic diodes can result in mutual interference among circuits, operational faults, or physical damage. Therefore, conditions that cause these diodes to operate, such as applying a voltage lower than the GND voltage to an input pin (and thus to the P substrate) should be avoided.

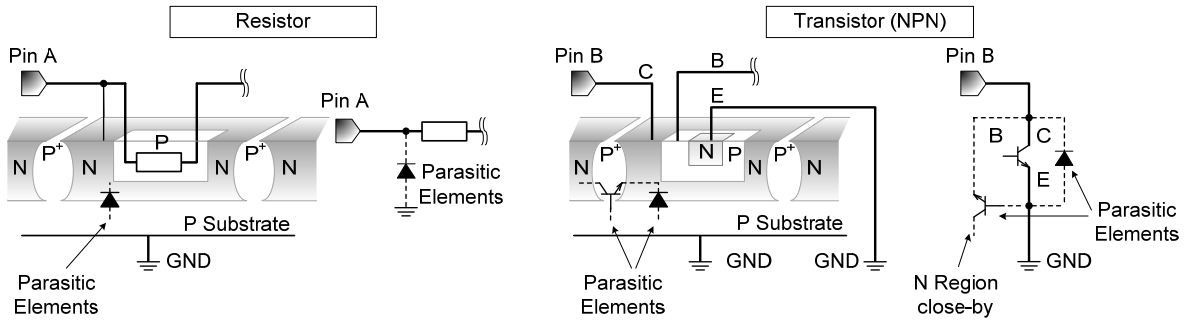

(11) Ground wiring pattern

When using both small-signal and large-current GND traces, the two ground traces should be routed separately but connected to a single ground at the reference point of the application board to avoid fluctuations in the small-signal ground caused by large currents. Also ensure that the GND traces of external components do not cause variations on the GND voltage. The power supply and ground lines must be as short and thick as possible to reduce line impedance.

© 2016 ROHM Co., Ltd. All rights reserved.

●**External Measurement Drawing and Packing Forming Specification**

Package Name	SOT89-3K

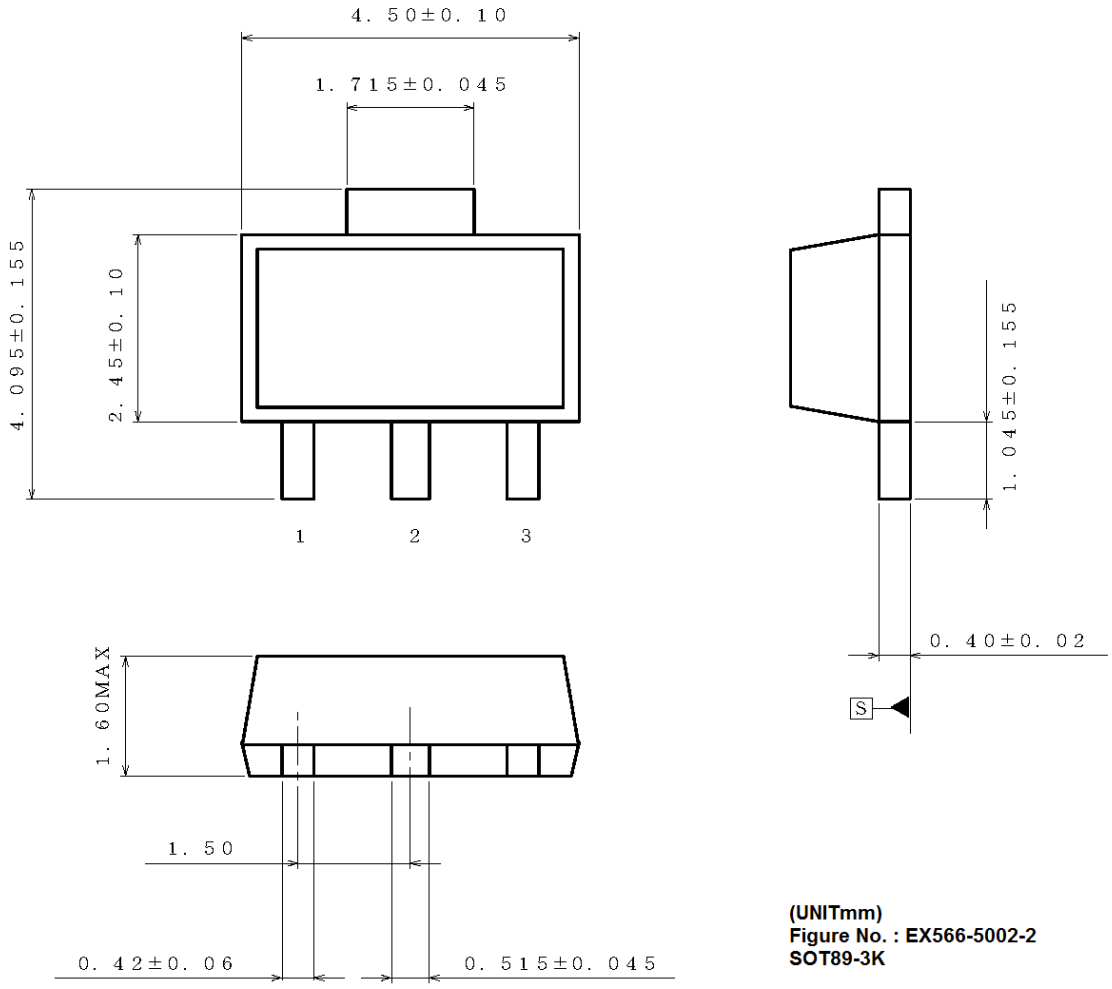

(UNITmm)
Figure No. : EX566-5002-2
SOT89-3K

< Tape and Reel Information >

Tape	Embossed carrier tape
Quantity	1000pcs
Direction of feed	TL The direction is the pin 1 of product is at the lower left when you hold reel on the left hand and you pull out the tape on the right hand

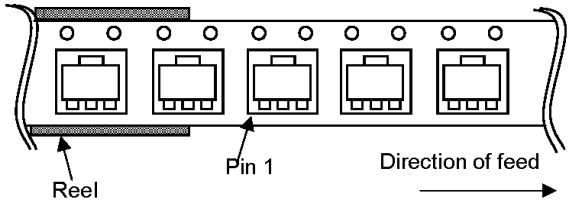

© 2016 ROHM Co., Ltd. All rights reserved.

●**Marking Diagram**

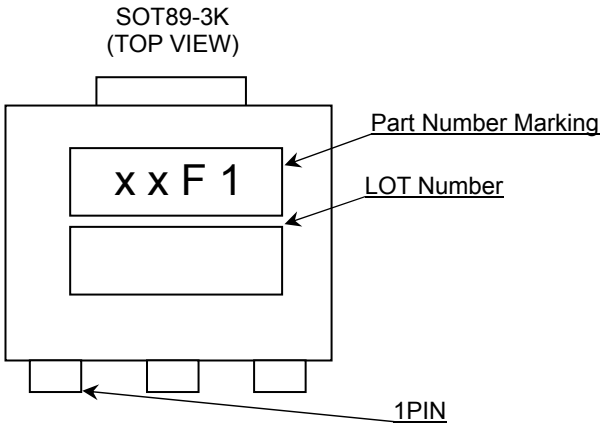

Output Voltage [V]	Part Number Marking(xx)
3.3	33
5.0	50
5.4	54
12.0	J2

●**Revision History**

Date	Revision	Revision contents
2014.02.04	001	New release
2014.10.31	002	Added 5.0V and 12V to output voltage line-up.
2015.06.08	003	The document control number: TSZ02201-0R6R0A600600-1-2 →TSZ02201-0GAG0A600600-1-2. Modified the package name to SOT89-3K. Modified external measurement drawing.
2016.04.11	004	P.1 Ordering Information changed P.3 Electrical characteristics added P.6 Figure 13. PSRR modified from (Io=0mA) to (Io=50mA) The document control number: TSZ02201-0R6R0A600600-1-2 →TSZ02201-0G2G0A600060-1-2

© 2016 ROHM Co., Ltd. All rights reserved.

Notice

Precaution on using ROHM Products

1. Our Products are designed and manufactured for application in ordinary electronic equipments (such as AV equipment, OA equipment, telecommunication equipment, home electronic appliances, amusement equipment, etc.). If you intend to use our Products in devices requiring extremely high reliability (such as medical equipment (Note 1), transport equipment, traffic equipment, aircraft/spacecraft, nuclear power controllers, fuel controllers, car equipment including car accessories, safety devices, etc.) and whose malfunction or failure may cause loss of human life, bodily injury or serious damage to property ("Specific Applications"), please consult with the ROHM sales representative in advance. Unless otherwise agreed in writing by ROHM in advance, ROHM shall not be in any way responsible or liable for any damages, expenses or losses incurred by you or third parties arising from the use of any ROHM's Products for Specific Applications.

(Note1) Medical Equipment Classification of the Specific Applications

JAPAN	USA	EU	CHINA
CLASSⅢ	CLASSⅢ	CLASSⅡb	CLASSⅢ
CLASSⅣ		CLASSⅢ	

2. ROHM designs and manufactures its Products subject to strict quality control system. However, semiconductor products can fail or malfunction at a certain rate. Please be sure to implement, at your own responsibilities, adequate safety measures including but not limited to fail-safe design against the physical injury, damage to any property, which a failure or malfunction of our Products may cause. The following are examples of safety measures:
   [a] Installation of protection circuits or other protective devices to improve system safety
   [b] Installation of redundant circuits to reduce the impact of single or multiple circuit failure

3. Our Products are designed and manufactured for use under standard conditions and not under any special or extraordinary environments or conditions, as exemplified below. Accordingly, ROHM shall not be in any way responsible or liable for any damages, expenses or losses arising from the use of any ROHM's Products under any special or extraordinary environments or conditions. If you intend to use our Products under any special or extraordinary environments or conditions (as exemplified below), your independent verification and confirmation of product performance, reliability, etc, prior to use, must be necessary:
   [a] Use of our Products in any types of liquid, including water, oils, chemicals, and organic solvents
   [b] Use of our Products outdoors or in places where the Products are exposed to direct sunlight or dust
   [c] Use of our Products in places where the Products are exposed to sea wind or corrosive gases, including Cl_2, H_2S, NH_3, SO_2, and NO_2
   [d] Use of our Products in places where the Products are exposed to static electricity or electromagnetic waves
   [e] Use of our Products in proximity to heat-producing components, plastic cords, or other flammable items
   [f] Sealing or coating our Products with resin or other coating materials
   [g] Use of our Products without cleaning residue of flux (even if you use no-clean type fluxes, cleaning residue of flux is recommended); or Washing our Products by using water or water-soluble cleaning agents for cleaning residue after soldering
   [h] Use of the Products in places subject to dew condensation

4. The Products are not subject to radiation-proof design.

5. Please verify and confirm characteristics of the final or mounted products in using the Products.

6. In particular, if a transient load (a large amount of load applied in a short period of time, such as pulse. is applied, confirmation of performance characteristics after on-board mounting is strongly recommended. Avoid applying power exceeding normal rated power; exceeding the power rating under steady-state loading condition may negatively affect product performance and reliability.

7. De-rate Power Dissipation depending on ambient temperature. When used in sealed area, confirm that it is the use in the range that does not exceed the maximum junction temperature.

8. Confirm that operation temperature is within the specified range described in the product specification.

9. ROHM shall not be in any way responsible or liable for failure induced under deviant condition from what is defined in this document.

Precaution for Mounting / Circuit board design

1. When a highly active halogenous (chlorine, bromine, etc.) flux is used, the residue of flux may negatively affect product performance and reliability.

2. In principle, the reflow soldering method must be used on a surface-mount products, the flow soldering method must be used on a through hole mount products. If the flow soldering method is preferred on a surface-mount products, please consult with the ROHM representative in advance.

For details, please refer to ROHM Mounting specification

© 2015 ROHM Co., Ltd. All rights reserved.

Precautions Regarding Application Examples and External Circuits

1. If change is made to the constant of an external circuit, please allow a sufficient margin considering variations of the characteristics of the Products and external components, including transient characteristics, as well as static characteristics.

2. You agree that application notes, reference designs, and associated data and information contained in this document are presented only as guidance for Products use. Therefore, in case you use such information, you are solely responsible for it and you must exercise your own independent verification and judgment in the use of such information contained in this document. ROHM shall not be in any way responsible or liable for any damages, expenses or losses incurred by you or third parties arising from the use of such information.

Precaution for Electrostatic

This Product is electrostatic sensitive product, which may be damaged due to electrostatic discharge. Please take proper caution in your manufacturing process and storage so that voltage exceeding the Products maximum rating will not be applied to Products. Please take special care under dry condition (e.g. Grounding of human body / equipment / solder iron, isolation from charged objects, setting of Ionizer, friction prevention and temperature / humidity control).

Precaution for Storage / Transportation

1. Product performance and soldered connections may deteriorate if the Products are stored in the places where:
   [a] the Products are exposed to sea winds or corrosive gases, including Cl2, H2S, NH3, SO2, and NO2
   [b] the temperature or humidity exceeds those recommended by ROHM
   [c] the Products are exposed to direct sunshine or condensation
   [d] the Products are exposed to high Electrostatic

2. Even under ROHM recommended storage condition, solderability of products out of recommended storage time period may be degraded. It is strongly recommended to confirm solderability before using Products of which storage time is exceeding the recommended storage time period.

3. Store / transport cartons in the correct direction, which is indicated on a carton with a symbol. Otherwise bent leads may occur due to excessive stress applied when dropping of a carton.

4. Use Products within the specified time after opening a humidity barrier bag. Baking is required before using Products of which storage time is exceeding the recommended storage time period.

Precaution for Product Label

A two-dimensional barcode printed on ROHM Products label is for ROHM's internal use only.

Precaution for Disposition

When disposing Products please dispose them properly using an authorized industry waste company.

Precaution for Foreign Exchange and Foreign Trade act

Since concerned goods might be fallen under listed items of export control prescribed by Foreign exchange and Foreign trade act, please consult with ROHM in case of export.

Precaution Regarding Intellectual Property Rights

1. All information and data including but not limited to application example contained in this document is for reference only. ROHM does not warrant that foregoing information or data will not infringe any intellectual property rights or any other rights of any third party regarding such information or data.

2. ROHM shall not have any obligations where the claims, actions or demands arising from the combination of the Products with other articles such as components, circuits, systems or external equipment (including software).

3. No license, expressly or implied, is granted hereby under any intellectual property rights or other rights of ROHM or any third parties with respect to the Products or the information contained in this document. Provided, however, that ROHM will not assert its intellectual property rights or other rights against you or your customers to the extent necessary to manufacture or sell products containing the Products, subject to the terms and conditions herein.

Other Precaution

1. This document may not be reprinted or reproduced, in whole or in part, without prior written consent of ROHM.

2. The Products may not be disassembled, converted, modified, reproduced or otherwise changed without prior written consent of ROHM.

3. In no event shall you use in any way whatsoever the Products and the related technical information contained in the Products or this document for any military purposes, including but not limited to, the development of mass-destruction weapons.

4. The proper names of companies or products described in this document are trademarks or registered trademarks of ROHM, its affiliated companies or third parties.

© 2015 ROHM Co., Ltd. All rights reserved.

General Precaution

1. Before you use our Products, you are requested to carefully read this document and fully understand its contents. ROHM shall not be in any way responsible or liable for failure, malfunction or accident arising from the use of any ROHM's Products against warning, caution or note contained in this document.

2. All information contained in this document is current as of the issuing date and subject to change without any prior notice. Before purchasing or using ROHM's Products, please confirm the latest information with a ROHM sales representative.

3. The information contained in this document is provided on an "as is" basis and ROHM does not warrant that all information contained in this document is accurate and/or error-free. ROHM shall not be in any way responsible or liable for any damages, expenses or losses incurred by you or third parties resulting from inaccuracy or errors of or concerning such information.

© 2015 ROHM Co., Ltd. All rights reserved.

ENTEGRECİ

Bu belge www.entegreci.com üzerinden sunulmaktadır.

Elektronik komponent tedarikinde Entegreci

Entegreci, Eskişehir merkezli, Türkiye geneline satış yapan bir elektronik komponent mağazasıdır. Entegreler (IC), mikrodenetleyiciler, transistörler, diyotlar, pasif elemanlar, konnektörler, modüller ve geliştirme kartları tek adetten seri üretim adetlerine kadar satılır. Ürün sayfalarında güncel stok durumunu, fiyatı ve datasheet bağlantısını bulabilirsiniz.

Parça koduyla arama

Üretici parça numarasını yazın; stok ve fiyatı hemen görün.

www.entegreci.com

Ürün kategorileri

Entegreden kapasitöre tüm elektronik komponent kategorileri.

Kategorilere göz atın

Üreticiler

Aradığınız üreticinin ürünlerini tek sayfada inceleyin.

Üreticileri görün

Toplu alım ve teklif

Listede olmayan ya da yüksek adetli parçalar için teklif isteyin.

Teklif isteyin

www.entegreci.com | **destek@entegreci.com** | **0850 305 90 34**

Entegreci is an online electronic components store based in Türkiye. Search by manufacturer part number to see stock, prices and datasheets for integrated circuits, microcontrollers, transistors, passive components and connectors, or request a quote for parts that are not listed.

Bu sayfa Entegreci tarafından eklenmiştir. Belgenin önceki sayfaları asıl yayıncısına aittir ve içeriği değiştirilmemiştir; en güncel sürüm için belgenin yayıncısına başvurun.