Negative Fixed Voltage Regulator

SG79xxA/SG79xx

Product Overview

Description

The SG79xxA/SG79xx series of negative regulators offer self-contained, fixed voltage capability with up to 1.5A of load current and input voltage up to –30V. With a variety of output voltages this regulator series is an optimum complement to the SG7800A/SG7800 positive three terminal regulators.

These units feature a unique band gap reference which allows the SG79xxA series to be specified with an output voltage tolerance of ±1.5%. The SG79xxA versions also offer much improved line regulation characteristics.

All protective features of thermal shutdown, current limiting, and safe-area control have been designed into these units and since these regulators require only a single output capacitor (SG79xx series) or a capacitor and 5mA minimum load (SG120 series) for satisfactory performance, ease of application is assured.

Although designed as fixed-voltage regulators, the output voltage can be increased through the use of a simple voltage divider. The low quiescent drain current of the device insures good regulation when this method is used. These devices are available in hermetically sealed TO-257 (both case grounded 'G' and isolated 'IG'), TO-3, TO-39, and LCC packages.

Features

- Output voltage set internally to ±1.5% on SG79xxA
- Output current up to 1.5A
- Excellent line and load regulation
- Foldback current limiting
- Thermal overload protection
- Voltages available: –5V, –12V, –15V
- Contact factory for other voltage options
- Available in surface mount package

High Reliability Features

- Available to MIL-STD - 883, ¶ 1.2.1
- MIL-M38510/11501BXA - SG7905T-JAN
- MIL-M38510/11505BYA - SG7905K-JAN
- MIL-M38510/11502BXA - SG7912T-JAN
- MIL-M38510/11506BYA - SG7912K-JAN
- MIL-M38510/11503BXA - SG7915T-JAN
- MIL-M38510/11507BYA - SG7915K-JAN
- MIL-M38510/11508BYA - SG7924K-JAN
- Level "S" processing available
- Available to DLA Standard Microcircuit Drawing (SMD)

© 2015–2024 Microchip Technology Inc. and its subsidiaries

Figure 1. Schematic Diagram

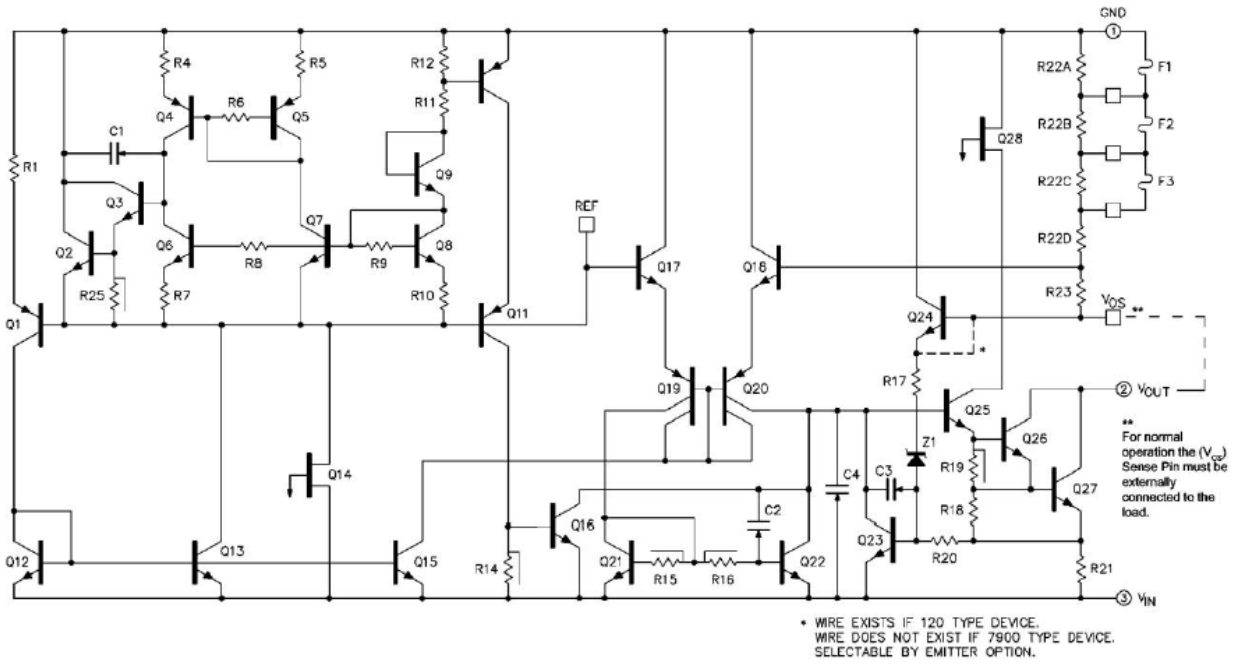

© 2015–2024 Microchip Technology Inc. and its subsidiaries

Table of Contents

Product Overview..... 1

1. Maximum Ratings.....4
   1.1. Thermal Data.....4
2. Characteristics Curves..... 5
3. Application Information.....7
   3.1. Recommended Operating Conditions.....7
4. Electrical Characteristics.....8
5. Connection Diagrams and Ordering Information..... 11
6. Package Outline Dimensions..... 13
7. Revision History.....17

Microchip Information..... 18
- The Microchip Website..... 18
- Product Change Notification Service..... 18
- Customer Support.....18
- Microchip Devices Code Protection Feature.....18
- Legal Notice.....18
- Trademarks..... 19
- Quality Management System.....20
- Worldwide Sales and Service..... 21

© 2015–2024 Microchip Technology Inc. and its subsidiaries

1. Maximum Ratings

Table 1-1. Maximum Ratings[1]

Parameter	Value	Units
Device output voltage	–5, –12, –15	V
Input voltage	–35, –40 (V_{OUT} ≤ –15V)	V
Input voltage differential (output shorted to ground)	35	V
Operating junction temperature	150	°C
Storage temperature range	–65 to 150	°C
Lead temperature (soldering 10 seconds)	300	°C

Note:

1. Exceeding these ratings could cause damage to the device. All voltages are with respect to Ground. Currents are positive into, negative out of specified terminal.

1.1 Thermal Data

Table 1-2. Thermal Data[1–2]

Parameter	Value	Units
K Package TO-3 3-Pin Metal Can		
Thermal resistance-junction to case, θ_{JC}	3	°C/W
Thermal resistance-junction to ambient, θ_{JA}	35	°C/W
T Package TO-39 3-Pin Metal Can		
Thermal resistance-junction to case, θ_{JC}	15	°C/W
Thermal resistance-junction to ambient, θ_{JA}	120	°C/W
G Package TO-257 3-Pin Hermetic		
Thermal resistance-junction to case, θ_{JC}	3.5	°C/W
Thermal resistance-junction to ambient, θ_{JA}	42	°C/W
IG Package TO-257 3-Pin Hermetic (Isolated)		
Thermal resistance-junction to case, θ_{JC}	4	°C/W
Thermal resistance-junction to ambient, θ_{JA}	42	°C/W
L Package Leadless Chip Carrier 20-Pin Ceramic		
Thermal resistance-junction to case, θ_{JC}	35	°C/W
Thermal resistance-junction to ambient, θ_{JA}	120	°C/W

Notes:

1. Junction Temperature Calculation: $T_J = T_A + (P_D \times \theta_{JA})$.
2. The θ_{JA} numbers are guidelines for the thermal performance of the device/pc-board system. All of the above assume no ambient airflow.

© 2015–2024 Microchip Technology Inc. and its subsidiaries

2. Characteristics Curves

Figure 2-1. Maximum Average Power Dissipation

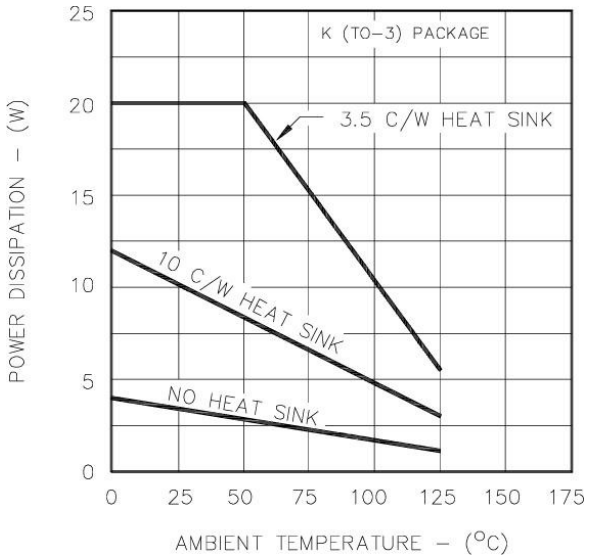

Figure 2-2. Quiescent Current Vs. Load

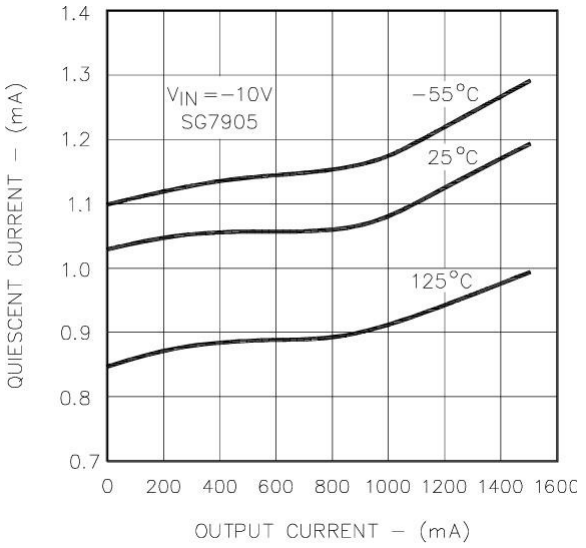

Figure 2-3. Temperature Coefficient

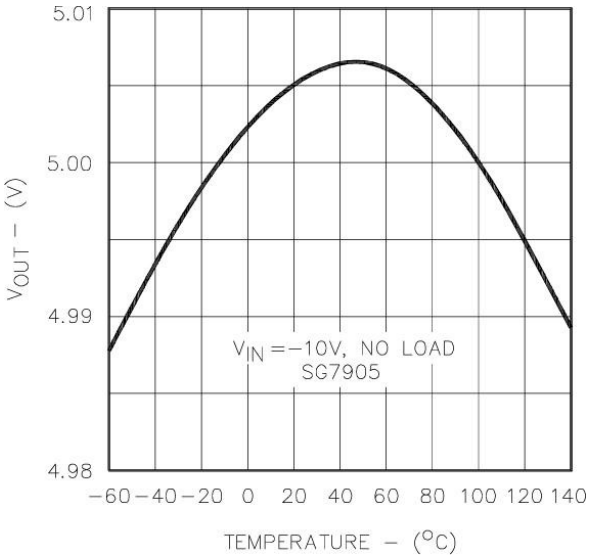

Figure 2-4. Short-Circuit Current Vs. V_{IN}

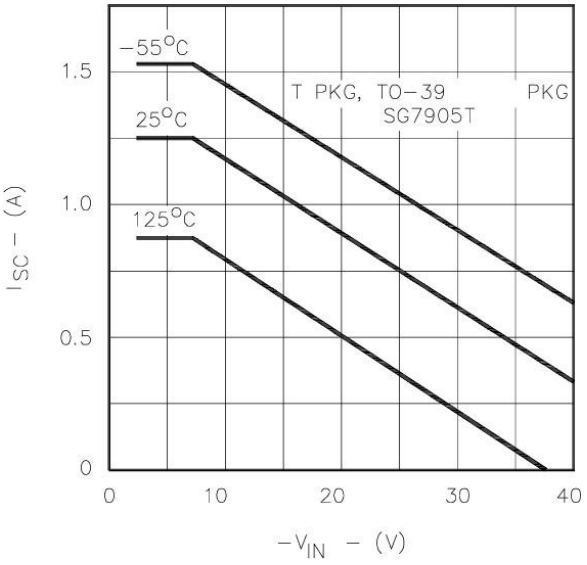

© 2015–2024 Microchip Technology Inc. and its subsidiaries

Figure 2-5. Quiescent Current Vs. V_{IN}

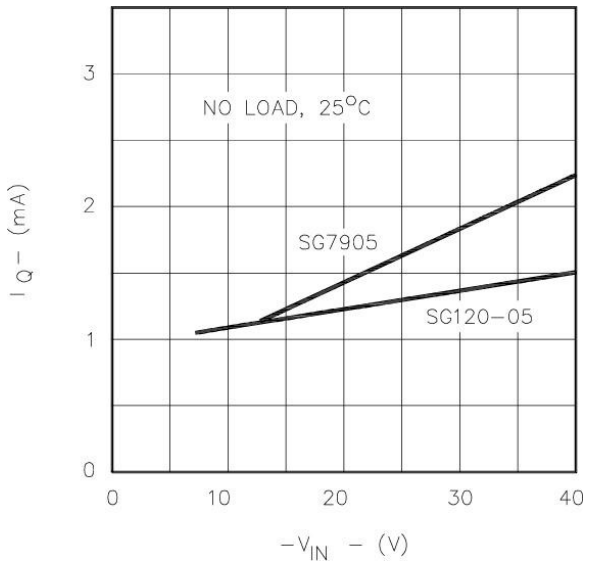

Figure 2-6. Short-Circuit Current Vs. V_{IN}

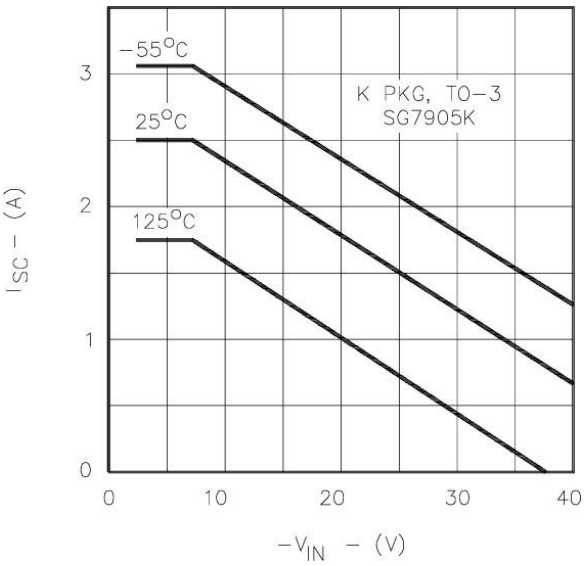

Figure 2-7. Dropout Characteristics

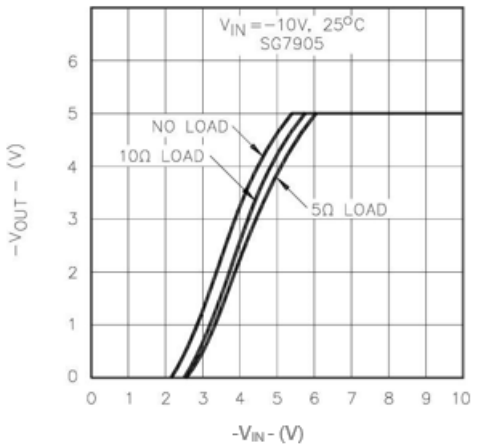

Figure 2-8. Ripple Rejection Vs. Frequency

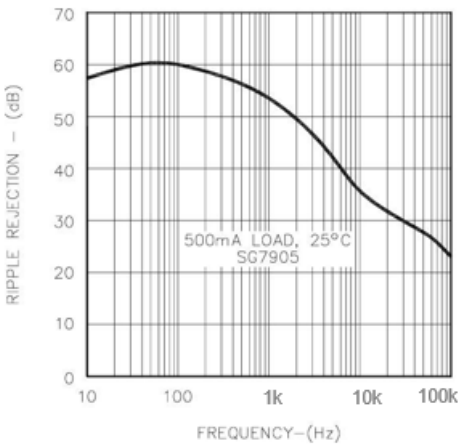

© 2015–2024 Microchip Technology Inc. and its subsidiaries

3. Application Information

Figure 3-1. Fixed Output Regulator

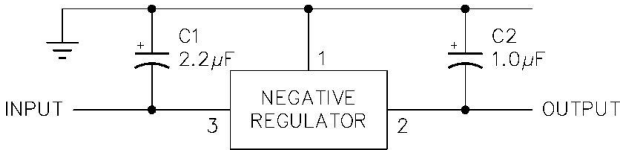

Notes:

1. C1 is required only if regulator is separated from rectifier filter.
2. Both C1 and C2 should be low E.S.R. types such as solid tantalum. If aluminum electrolytic capacitors are used, at least 10 times values shown should be selected.
3. If large output capacities are used, the regulators must be protected from momentary input shorts. A high current diode is indicated from output to input.

Figure 3-2. Circuit for Increasing Output Voltage

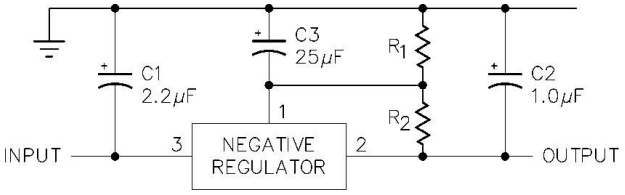

Note:

1. C3 optional for improved transient response and ripple rejection.

$$V_{OUT} = V(REGULATOR)\frac{R_1 + R_2}{R_1}$$

$$R_2 = \frac{V(REG)}{15mA}$$

3.1 Recommended Operating Conditions

Table 3-1. Recommended Operating Conditions

Parameter	SG79xx / 79xxA			Units
	Min.	Typ.	Max.	
Operating Junction Temperature Range[1]	–55	—	150	°C

Note:

1. Range over which the device is functional.

© 2015–2024 Microchip Technology Inc. and its subsidiaries

4. Electrical Characteristics

Unless otherwise specified, these specifications apply over the operating ambient temperatures for SG7905A/SG7905 with –55 °C ≤ T_A ≤ 125 °C, V_{IN} = –10V, I_O = 500 mA for the K, G, and IG-Power Packages, I_O = 100 mA for the T and L packages, C_{IN} = 2 µF, and C_{OUT} = 1 µF. Low duty cycle pulse testing techniques are used which maintains junction and case temperatures equal to the ambient temperature.

Table 4-1. Electrical Characteristics for SG7905A/SG7905

Parameter	Test Conditions	SG7905A			SG7905			Units
		Min.	Typ.	Max.	Min.	Typ.	Max.	
Output voltage	T_J = 25 °C	–4.95	–5.00	–5.05	–4.80	–5.00	–5.20	V
Line regulation[1]	V_{IN} = –7.5V to –25V, T_J = 25 °C	—	5	25	—	3	50	mV
	V_{IN} = –8V to –12V, T_J = 25 °C	—	3	12	—	1	25	mV
Load regulation[1]	Power packages: I_O = 5 mA to 1.5A, T_J = 25 °C	—	15	75	—	15	100	mV
	I_O = 250 mA to 750 mA, T_J = 25 °C	—	15	25	—	15	25	mV
	T-Package: I_O = 5 mA to 500 mA, T_J = 250 °C	—	5	30	—	5	100	mV
Total output voltage tolerance	V_{IN} = –8V to –20V Power packages: I_O = 5 mA to 1.0A, P ≤ 20W	–4.85	–5.00	–5.15	–4.70	–5.00	–5.30	V
	V_{IN} = –8V to –20V T-Package: I_O = 5 mA to 500 mA, P ≤ 20W	–4.85	–5.00	–5.15	–4.70	–5.00	–5.30	V
Quiescent current	Over Temperature Range	—	—	2.5	—	—	2.5	mA
	T_J = 25 °C	—	—	2.0	—	—	2.0	mA
Quiescent current change	With line: V_{IN} = –8V to –25V	—	—	1.3	—	—	1.3	mA
	With load: I_O = 5 mA to 1.0A (Power Packages.)	—	—	0.5	—	—	0.5	mA
	I_O = 5 mA to 500 mA (T)	—	—	0.5	—	—	0.5	mA
Dropout voltage	ΔV_O = 100 mV, T_J = 25 °C Power packages: I_O = 1.0A, T-Package: I_O = 500 mA	—	1.1	2.3	—	1.1	2.3	V
Peak output current	Power packages: T_J = 25 °C	1.5	—	3.3	1.5	—	3.3	A
	T-Package: T_J = 25 °C	0.5	—	1.4	0.5	—	1.4	A
Short circuit current	Power packages: V_{IN} = –35V, T_J = 25 °C	—	—	1.2	—	—	1.2	A
	T-Package: V_{IN} = –35V, T_J = 25 °C	—	—	0.6	—	—	0.6	A
Ripple rejection	ΔV_{IN} = 10V, f = 120 Hz, T_J = 25 °C	54	—	—	54	—	—	dB
Output noise voltage (rms)[2]	f = 10 Hz to 100 kHz	—	25	80	—	25	80	µV/V
Long term stability	1000 hours at T_J = 125 °C	—	20	—	—	20	—	mV
Thermal shutdown	I_O = 5 mA	—	175	—	—	175	—	°C

Notes:

1. All regulation tests are made at constant junction temperature with low duty cycle testing.
2. This test is guaranteed but is not tested in production.

© 2015–2024 Microchip Technology Inc. and its subsidiaries

Unless otherwise specified, these specifications apply over the operating ambient temperatures for SG7912A/SG7912 with –55 °C ≤ T_A ≤ 125 °C, V_{IN} = –19V, I_O = 500 mA for the K, G, and IG-Power Packages, I_O = 100 mA for the T and L packages, C_{IN} = 2 µF, and C_{OUT} = 1 µF. Low duty cycle pulse testing techniques are used which maintains junction and case temperatures equal to the ambient temperature.

Table 4-2. Electrical Characteristics for SG7912A/SG7912

Parameter	Test Conditions	SG7912A			SG7912			Units
		Min.	Typ.	Max.	Min.	Typ.	Max.	
Output voltage	T_J = 25 °C	–11.8	–12.0	–12.2	–11.5	–12.0	–12.5	V
Line regulation[1]	V_{IN} = –14.5V to –30V, T_J = 25 °C	—	4	60	—	10	120	mV
	V_{IN} = –16V to –22V, T_J = 25 °C	—	3	30	—	3	60	mV
Load regulation[1]	Power packages: I_O = 5 mA to 1.5A, T_J = 25 °C	—	20	90	—	12	120	mV
	I_O = 250 mA to 750 mA, T_J = 25 °C	—	10	40	—	10	60	mV
	T-Package: I_O = 5 mA to 500 mA, T_J = 25 °C	—	10	40	—	10	240	mV
Total output voltage tolerance	V_{IN} = –14.5V to –27V Power packages: I_O = 5 mA to 1.0A, P ≤ 20W	–11.7	–12.0	–12.3	–11.4	–12.0	–12.6	V
	V_{IN} = –14.5V to –27V T-Package: I_O = 5 mA to 500 mA, P ≤ 2W	–11.7	–12.0	–12.3	–11.4	–12.0	–12.6	V
Quiescent current	Over Temperature Range	—	—	4	—	—	4	mA
	T_J = 25 °C	—	—	3	—	—	3	mA
Quiescent current change	With line: V_{IN} = –14.5V to –30V	—	—	1.0	—	—	1.0	mA
	With load: I_O = 5 mA to 1.0A (power packages.)	—	—	0.5	—	—	0.5	mA
	I_O = 5 mA to 500 mA (T)	—	—	0.5	—	—	0.5	mA
Dropout voltage	ΔV_O = 100 mV, T_J = 25 °C Power packages: I_O = 1.0A, T-Package: I_O = 500 mA	—	1.1	2.3	—	1.1	2.3	V
Peak output current	Power packages: T_J = 25 °C	1.5	—	3.3	1.5	—	3.3	A
	T-Package: T_J = 25 °C	0.5	—	1.4	0.5	—	1.4	A
Short circuit current	Power packages: V_{IN} = –35V, T_J = 25 °C	—	—	1.2	—	—	0.2	A
	T-Package: V_{IN} = –35V, T_J = 25 °C	—	—	0.6	—	—	0.6	A
Ripple rejection	ΔV_{IN} = 10V, f = 120 Hz, T_J = 25 °C	54	—		54	—	—	dB
Output noise voltage (rms)[2]	f = 10 Hz to 100 kHz	—	25	80	—	25	80	µV/V
Long term stability	1000 hours at T_J = 125 °C	—	60		—	60	—	mV
Thermal shutdown	I_O = 5 mA	—	175		—	175	—	°C

Notes:

1. All regulation tests are made at constant junction temperature with low duty cycle testing.
2. This test is guaranteed but is not tested in production.

© 2015–2024 Microchip Technology Inc. and its subsidiaries

Unless otherwise specified, these specifications apply over the operating ambient temperatures for SG7915A / SG7915 with –55 °C ≤ T_A ≤ 125 °C, V_{IN} = –23V, I_O = 500 mA for the K, G, and IG-Power Packages, I_O = 100 mA for the T and L packages, C_{IN} = 2 µF, and C_{OUT} = 1 µF. Low duty cycle pulse testing techniques are used which maintains junction and case temperatures equal to the ambient temperature.

Table 4-3. Electrical Characteristics for SG7915A/SG7915

Parameter	Test Conditions	SG7915A			SG7915			Units
		Min.	Typ.	Max.	Min.	Typ.	Max.	
Output voltage	T_J = 25 °C	–14.8	–15.0	–15.2	–14.4	–15.0	–15.6	V
Line regulation[1]	V_{IN} = –17.5V to –30V, T_J = 25 °C	—	5	75	—	11	150	mV
	V_{IN} = –20V to –25V, T_J = 25 °C	—	3	40	—	3	75	mV
Load regulation[1]	Power packages: I_O = 5 mA to 1.5A, T_J = 25 °C	—	30	100	—	12	150	mV
	I_O = 250 mA to 750 mA, T_J = 25 °C	—	4	50	—	4	75	mV
	T-Package: I_O = 5 mA to 500 mA, T_J = 25 °C	—	10	50	—	10	240	mV
Total output voltage tolerance	V_{IN} = –18.5V to –30V Power packages: I_O = 5 mA to 1.0A, P ≤ 20W	–14.6	–15.0	–15.4	–14.25	–15.00	–15.75	V
	V_{IN} = –18.5V to –30V T-Package: I_O = 5 mA to 500 mA, P ≤ 2W	–14.6	–15.0	–15.4	–14.25	–15.00	–15.75	V
Quiescent current	Over Temperature Range	—	—	4	—	—	4	mA
	T_J = 25 °C	—	—	3	—	—	3	mA
Quiescent current change	With line: V_{IN} = –18.5V to –30V	—	—	1.0	—	—	1.0	mA
	With load: I_O = 5 mA to 1.0A (power packages)	—	—	0.5	—	—	0.5	mA
	I_O = 5 mA to 500 mA (T)	—	—	0.5	—	—	0.5	mA
Dropout voltage	ΔV_O = 100 mV, T_J = 25 °C Power packages: I_O = 1.0A, T-Package: I_O = 500 mA	—	1.1	2.3	—	1.1	2.3	V
Peak output current	Power Packages: T_J = 25 °C	1.5	—	3.3	1.5	—	3.3	A
	T-Package: T_J = 25 °C	0.5	—	1.4	0.5	—	1.4	A
Short circuit current	Power Packages: V_{IN} = –35V, T_J = 25 °C	—	—	1.2	—	—	1.2	A
	T-Package: V_{IN} = –35V, T_J = 25 °C	—	—	0.6	—	—	0.6	A
Ripple rejection	ΔV_{IN} = 10V, f = 120 Hz, T_J = 25 °C	54	—		54	—	—	dB
Output noise voltage (rms)[2]	f = 10 Hz to 100 kHz	—	25	80	—	25	80	µV/V
Long term stability	1000 hours at T_J = 125 °C	—	60	—	—	60	—	mV
Thermal shutdown	I_O = 5 mA	—	175	—	—	175	—	°C

Notes:

1. All regulation tests are made at constant junction temperature with low duty cycle testing.
2. This test is guaranteed but is not tested in production.

© 2015–2024 Microchip Technology Inc. and its subsidiaries

5. Connection Diagrams and Ordering Information

Table 5-1. Connection Diagrams and Ordering Information[1–4]

Package	Part No.	Ambient Temperature Range	Connection Diagram
3-Terminal TO-3 Metal Can K-Package	SG79xxAK-883B	–55°C to 125°C	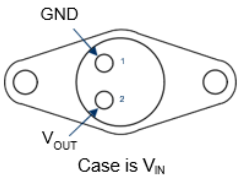
	SG7905AK-DESC	–55°C to 125°C	
	SG7912AK-DESC	–55°C to 125°C	
	SG7915AK-DESC	–55°C to 125°C	
	SG79xxAK	–55°C to 125°C	
	SG79xxK-883B	–55°C to 125°C	
	SG7905K-JAN	–55°C to 125°C	
	SG7912K-JAN	–55°C to 125°C	
	SG7915K-JAN	–55°C to 125°C	
	SG79xxK	–55°C to 125°C	
3-Pin TO-39 Metal Can T-Package	SG79xxAT-883B	–55°C to 125°C	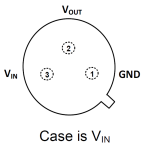
	SG7905AT-DESC	–55°C to 125°C	
	SG7912AT-DESC	–55°C to 125°C	
	SG7915AT-DESC	–55°C to 125°C	
	SG79xxAT	–55°C to 125°C	
	SG79xxT-883B	–55°C to 125°C	
	SG7905T-JAN	–55°C to 125°C	
	SG7912T-JAN	–55°C to 125°C	
	SG7915T-JAN	–55°C to 125°C	
	SG79xxT	–55°C to 125°C	
3-Pin Hermetic TO-257 IG – Package (Isolated)	SG79xxAIG-883B	–55°C to 125°C	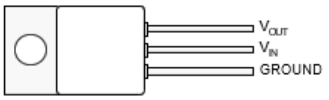
	SG7905AIG-DESC	–55°C to 125°C	
	SG7912AIG-DESC	–55°C to 125°C	
	SG7915AIG-DESC	–55°C to 125°C	
	SG79xxAIG	–55°C to 125°C	
	SG79xxIG-883B	–55°C to 125°C	
	SG79xxIG	–55°C to 125°C	
20-Pin Ceramic Leadless Chip Carrier[5–6] L – Package	SG79xxL-883B	–55°C to 125°C	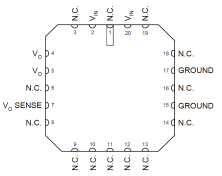
	SG79xxL	–55°C to 125°C	
	SG7905AL-DESC	–55°C to 125°C	
	SG7912AL-DESC	–55°C to 125°C	
	SG7915AL-DESC	–55°C to 125°C	

© 2015–2024 Microchip Technology Inc. and its subsidiaries

.....continued

Package	Part No.	Ambient Temperature Range	Connection Diagram
3-Pin Hermetic TO-257 G – Package (Case is V_{IN})	SG7905AG-DESC	–55°C to 125°C	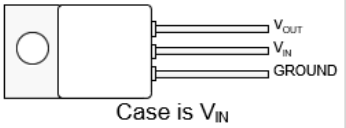
	SG7912AG-DESC	–55°C to 125°C	

Notes:

1. Contact factory for JAN and DESC product availability.
2. All parts are viewed from the top.
3. “xx” to be replaced by output voltage of specific fixed regulator.
4. Some products will be available in hermetic flat pack (F). Consult factory for price and availability.
5. Both inputs and outputs must be externally connected together at the device terminals.
6. For normal operation, the V_O SENSE pin must be externally connected to the load.

© 2015–2024 Microchip Technology Inc. and its subsidiaries

6. Package Outline Dimensions

Controlling dimensions are in inches; metric equivalents are shown for general information.

Figure 6-1. K 3-Pin Metal Can TO-3

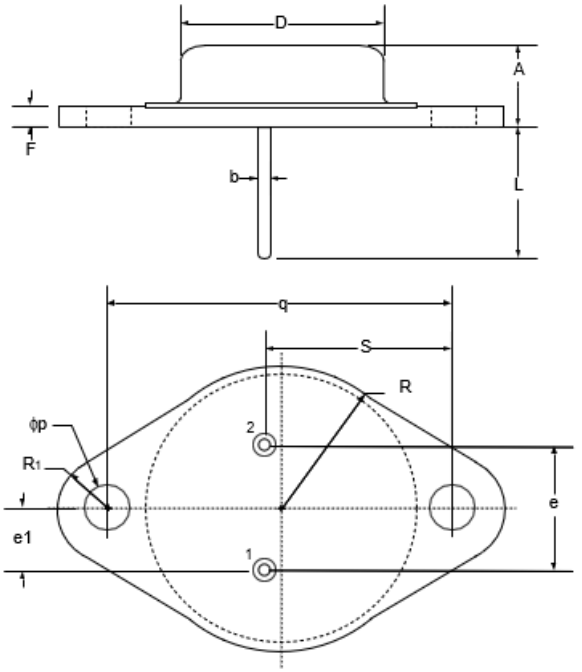

Dim.[1]	Millimeters		Inches	
	Min.	Max.	Min.	Max.
A	6.86	7.62	0.270	0.300
q	29.90	30.40	1.177	1.197
b	0.97	1.09	0.038	0.043
D	19.43	19.68	0.765	0.775
S	16.64	17.14	0.655	0.675
e	10.67	11.18	0.420	0.440
e1	5.21	5.72	0.205	0.225
F	1.52	2.03	0.060	0.080
θp	3.84	4.09	0.151	0.161
L	10.79	12.19	0.425	0.480
R1	3.33	4.78	0.131	0.188
R	12.57	13.34	0.495	0.525

Note:

1. Dimensions do not include protrusions; these shall not exceed 0.155 mm (0.006") on any side. Lead dimension shall not include solder coverage.

© 2015–2024 Microchip Technology Inc. and its subsidiaries

Figure 6-2. T 3-Pin Metal Can TO-39

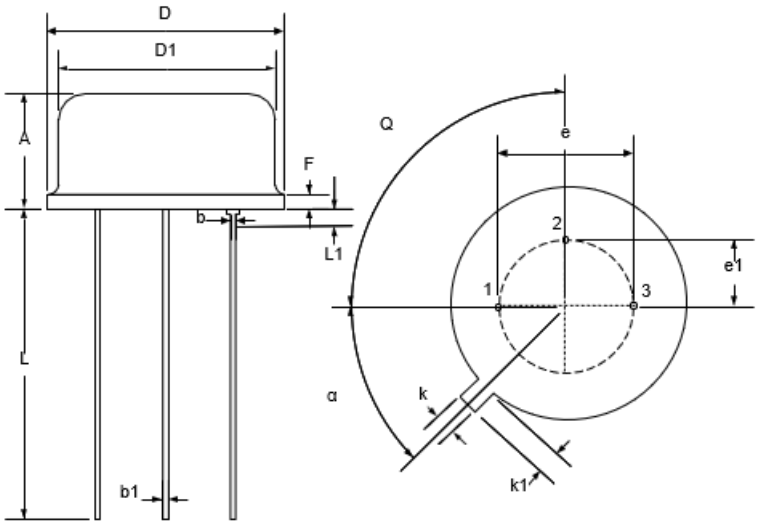

Dim.[1]	Millimeters		Inches	
	Min.	Max.	Min.	Max.
A	4.19	4.70	0.165	0.185
b	0.41	0.48	0.016	0.019
b1	0.41	0.53	0.016	0.021
D	8.89	9.40	0.350	0.370
D1	8.13	8.51	0.320	0.335
e	5.08 BSC		0.200 BSC	
e1	2.54 Typ		0.100 Typ	
F	—	1.02	—	0.040
k	0.71	0.86	0.028	0.034
k1	0.74	1.14	0.029	0.045
L	12.70	14.48	0.500	0.570
L1	—	1.27	—	0.050
Q	90° Typ		90° Typ	
α	45° Typ		45° Typ	

Note:

1. Dimensions do not include protrusions; these shall not exceed 0.155 mm (0.006") on any side. Lead dimension shall not include solder coverage.

© 2015–2024 Microchip Technology Inc. and its subsidiaries

Figure 6-3. G/IG 3-Pin Hermetic TO-257

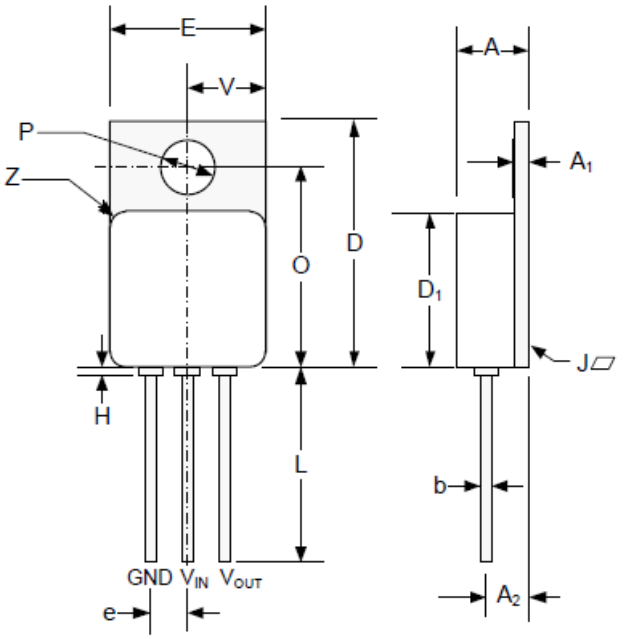

Dim.[1]	Millimeters		Inches	
	Min.	Max.	Min.	Max.
A	4.70	5.21	0.185	0.205
A1	0.89	1.14	0.035	0.045
A2	2.92	3.18	0.115	0.125
b	0.71	0.081	0.027	0.032
D	16.38	16.76	0.645	0.660
D1[2]	10.41	10.92	0.410	0.430
e	2.54 BSC		0.100 BSC	
E[2]	10.41	10.67	0.410	0.420
H	—	0.50	—	0.020
L	12.70		0.500	
O	13.39	13.64	0.527	0.537
P	3.56	3.81	0.140	0.150
J	—	0.10	—	0.004
V	5.13	5.38	0.202	0.212
Z	1.40 Typ		0.055 Typ	

Notes:

1. Dimensions do not include protrusions; these shall not exceed 0.155 mm (0.006") on any side. Lead dimension shall not include solder coverage.
2. Excludes Weld Fillet Around Lid.

© 2015–2024 Microchip Technology Inc. and its subsidiaries

Figure 6-4. L 20-Pin Ceramic Leadless Chip Carrier

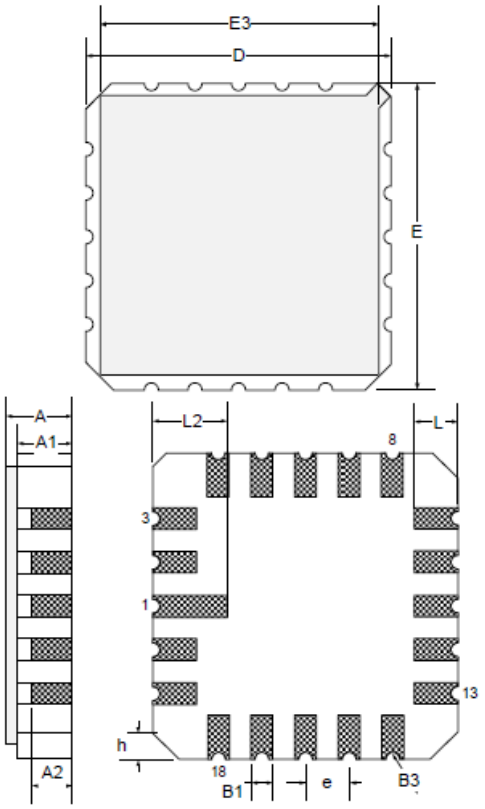

Dim.[1]	Millimeters		Inches	
	Min.	Max.	Min.	Max.
D, E	8.64	9.14	0.340	0.360
E3	—	8.128	-—	0.320
e	1.270 BSC		0.050 BSC	
B1	0.635 Typ		0.025 Typ	
L	1.02	1.52	0.040	0.060
A	1.626	2.286	0.064	0.090
h	1.016 Typ		0.040 Typ	
A1	1.372	1.68	0.054	0.066
A2	—	1.168	—	0.046
L2	1.91	2.41	0.075	0.95
B3	0.203R		0.008R	

Note:

1. All exposed metalized area shall be gold plated 60 µ-inch minimum thickness over nickel plated unless specified in purchase order. Lead dimension shall not include solder coverage.

© 2015–2024 Microchip Technology Inc. and its subsidiaries

7. Revision History

The revision history describes the changes that were implemented in the document. The changes are listed by revision, starting with the most current publication.

Revision	Date	Description
A	07/2024	Document was converted to Microchip template.
1.7	01/2015	Initial Microsemi document.

© 2015–2024 Microchip Technology Inc. and its subsidiaries

Microchip Information

The Microchip Website

Microchip provides online support via our website at www.microchip.com/. This website is used to make files and information easily available to customers. Some of the content available includes:

- **Product Support** – Data sheets and errata, application notes and sample programs, design resources, user's guides and hardware support documents, latest software releases and archived software
- **General Technical Support** – Frequently Asked Questions (FAQs), technical support requests, online discussion groups, Microchip design partner program member listing
- **Business of Microchip** – Product selector and ordering guides, latest Microchip press releases, listing of seminars and events, listings of Microchip sales offices, distributors and factory representatives

Product Change Notification Service

Microchip's product change notification service helps keep customers current on Microchip products. Subscribers will receive email notification whenever there are changes, updates, revisions or errata related to a specified product family or development tool of interest.

To register, go to www.microchip.com/pcn and follow the registration instructions.

Customer Support

Users of Microchip products can receive assistance through several channels:

- Distributor or Representative
- Local Sales Office
- Embedded Solutions Engineer (ESE)
- Technical Support

Customers should contact their distributor, representative or ESE for support. Local sales offices are also available to help customers. A listing of sales offices and locations is included in this document.

Technical support is available through the website at: www.microchip.com/support

Microchip Devices Code Protection Feature

Note the following details of the code protection feature on Microchip products:

- Microchip products meet the specifications contained in their particular Microchip Data Sheet.
- Microchip believes that its family of products is secure when used in the intended manner, within operating specifications, and under normal conditions.
- Microchip values and aggressively protects its intellectual property rights. Attempts to breach the code protection features of Microchip product is strictly prohibited and may violate the Digital Millennium Copyright Act.
- Neither Microchip nor any other semiconductor manufacturer can guarantee the security of its code. Code protection does not mean that we are guaranteeing the product is "unbreakable". Code protection is constantly evolving. Microchip is committed to continuously improving the code protection features of our products.

Legal Notice

This publication and the information herein may be used only with Microchip products, including to design, test, and integrate Microchip products with your application. Use of this information in any other manner violates these terms. Information regarding device applications is provided only for your convenience and may be superseded by updates. It is your responsibility to ensure

© 2015–2024 Microchip Technology Inc. and its subsidiaries

that your application meets with your specifications. Contact your local Microchip sales office for additional support or, obtain additional support at www.microchip.com/en-us/support/design-help/client-support-services.

THIS INFORMATION IS PROVIDED BY MICROCHIP "AS IS". MICROCHIP MAKES NO REPRESENTATIONS OR WARRANTIES OF ANY KIND WHETHER EXPRESS OR IMPLIED, WRITTEN OR ORAL, STATUTORY OR OTHERWISE, RELATED TO THE INFORMATION INCLUDING BUT NOT LIMITED TO ANY IMPLIED WARRANTIES OF NON-INFRINGEMENT, MERCHANTABILITY, AND FITNESS FOR A PARTICULAR PURPOSE, OR WARRANTIES RELATED TO ITS CONDITION, QUALITY, OR PERFORMANCE.

IN NO EVENT WILL MICROCHIP BE LIABLE FOR ANY INDIRECT, SPECIAL, PUNITIVE, INCIDENTAL, OR CONSEQUENTIAL LOSS, DAMAGE, COST, OR EXPENSE OF ANY KIND WHATSOEVER RELATED TO THE INFORMATION OR ITS USE, HOWEVER CAUSED, EVEN IF MICROCHIP HAS BEEN ADVISED OF THE POSSIBILITY OR THE DAMAGES ARE FORESEEABLE. TO THE FULLEST EXTENT ALLOWED BY LAW, MICROCHIP'S TOTAL LIABILITY ON ALL CLAIMS IN ANY WAY RELATED TO THE INFORMATION OR ITS USE WILL NOT EXCEED THE AMOUNT OF FEES, IF ANY, THAT YOU HAVE PAID DIRECTLY TO MICROCHIP FOR THE INFORMATION.

Use of Microchip devices in life support and/or safety applications is entirely at the buyer's risk, and the buyer agrees to defend, indemnify and hold harmless Microchip from any and all damages, claims, suits, or expenses resulting from such use. No licenses are conveyed, implicitly or otherwise, under any Microchip intellectual property rights unless otherwise stated.

Trademarks

The Microchip name and logo, the Microchip logo, Adaptec, AVR, AVR logo, AVR Freaks, BesTime, BitCloud, CryptoMemory, CryptoRF, dsPIC, flexPWR, HELDO, IGLOO, JukeBlox, KeeLoq, Kleer, LANCheck, LinkMD, maXStylus, maXTouch, MediaLB, megaAVR, Microsemi, Microsemi logo, MOST, MOST logo, MPLAB, OptoLyzer, PIC, picoPower, PICSTART, PIC32 logo, PolarFire, Prochip Designer, QTouch, SAM-BA, SenGenuity, SpyNIC, SST, SST Logo, SuperFlash, Symmetricom, SyncServer, Tachyon, TimeSource, tinyAVR, UNI/O, Vectron, and XMEGA are registered trademarks of Microchip Technology Incorporated in the U.S.A. and other countries.

AgileSwitch, ClockWorks, The Embedded Control Solutions Company, EtherSynch, Flashtec, Hyper Speed Control, HyperLight Load, Libero, motorBench, mTouch, Powermite 3, Precision Edge, ProASIC, ProASIC Plus, ProASIC Plus logo, Quiet-Wire, SmartFusion, SyncWorld, TimeCesium, TimeHub, TimePictra, TimeProvider, and ZL are registered trademarks of Microchip Technology Incorporated in the U.S.A.

Adjacent Key Suppression, AKS, Analog-for-the-Digital Age, Any Capacitor, AnyIn, AnyOut, Augmented Switching, BlueSky, BodyCom, Clockstudio, CodeGuard, CryptoAuthentication, CryptoAutomotive, CryptoCompanion, CryptoController, dsPICDEM, dsPICDEM.net, Dynamic Average Matching, DAM, ECAN, Espresso T1S, EtherGREEN, EyeOpen, GridTime, IdealBridge, IGaT, In-Circuit Serial Programming, ICSP, INICnet, Intelligent Paralleling, IntelliMOS, Inter-Chip Connectivity, JitterBlocker, Knob-on-Display, MarginLink, maxCrypto, maxView, memBrain, Mindi, MiWi, MPASM, MPF, MPLAB Certified logo, MPLIB, MPLINK, mSiC, MultiTRAK, NetDetach, Omniscient Code Generation, PICDEM, PICDEM.net, PICkit, PICtail, Power MOS IV, Power MOS 7, PowerSmart, PureSilicon, QMatrix, REAL ICE, Ripple Blocker, RTAX, RTG4, SAM-ICE, Serial Quad I/O, simpleMAP, SimpliPHY, SmartBuffer, SmartHLS, SMART-I.S., storClad, SQI, SuperSwitcher, SuperSwitcher II, Switchtec, SynchroPHY, Total Endurance, Trusted Time, TSHARC, Turing, USBCheck, VariSense, VectorBlox, VeriPHY, ViewSpan, WiperLock, XpressConnect, and ZENA are trademarks of Microchip Technology Incorporated in the U.S.A. and other countries.

SQTP is a service mark of Microchip Technology Incorporated in the U.S.A.

The Adaptec logo, Frequency on Demand, Silicon Storage Technology, and Symmcom are registered trademarks of Microchip Technology Inc. in other countries.

GestIC is a registered trademark of Microchip Technology Germany II GmbH & Co. KG, a subsidiary of Microchip Technology Inc., in other countries.

© 2015–2024 Microchip Technology Inc. and its subsidiaries

All other trademarks mentioned herein are property of their respective companies.

© 2015–2024, Microchip Technology Incorporated and its subsidiaries. All Rights Reserved.

ISBN: 978-1-6683-0037-4

Quality Management System

For information regarding Microchip's Quality Management Systems, please visit www.microchip.com/quality.

Worldwide Sales and Service

AMERICAS	ASIA/PACIFIC	ASIA/PACIFIC	EUROPE
Corporate Office 2355 West Chandler Blvd. Chandler, AZ 85224-6199 Tel: 480-792-7200 Fax: 480-792-7277 Technical Support: www.microchip.com/support Web Address: www.microchip.com **Atlanta** Duluth, GA Tel: 678-957-9614 Fax: 678-957-1455 **Austin, TX** Tel: 512-257-3370 **Boston** Westborough, MA Tel: 774-760-0087 Fax: 774-760-0088 **Chicago** Itasca, IL Tel: 630-285-0071 Fax: 630-285-0075 **Dallas** Addison, TX Tel: 972-818-7423 Fax: 972-818-2924 **Detroit** Novi, MI Tel: 248-848-4000 **Houston, TX** Tel: 281-894-5983 **Indianapolis** Noblesville, IN Tel: 317-773-8323 Fax: 317-773-5453 Tel: 317-536-2380 **Los Angeles** Mission Viejo, CA Tel: 949-462-9523 Fax: 949-462-9608 Tel: 951-273-7800 **Raleigh, NC** Tel: 919-844-7510 **New York, NY** Tel: 631-435-6000 **San Jose, CA** Tel: 408-735-9110 Tel: 408-436-4270 **Canada - Toronto** Tel: 905-695-1980 Fax: 905-695-2078	**Australia - Sydney** Tel: 61-2-9868-6733 **China - Beijing** Tel: 86-10-8569-7000 **China - Chengdu** Tel: 86-28-8665-5511 **China - Chongqing** Tel: 86-23-8980-9588 **China - Dongguan** Tel: 86-769-8702-9880 **China - Guangzhou** Tel: 86-20-8755-8029 **China - Hangzhou** Tel: 86-571-8792-8115 **China - Hong Kong SAR** Tel: 852-2943-5100 **China - Nanjing** Tel: 86-25-8473-2460 **China - Qingdao** Tel: 86-532-8502-7355 **China - Shanghai** Tel: 86-21-3326-8000 **China - Shenyang** Tel: 86-24-2334-2829 **China - Shenzhen** Tel: 86-755-8864-2200 **China - Suzhou** Tel: 86-186-6233-1526 **China - Wuhan** Tel: 86-27-5980-5300 **China - Xian** Tel: 86-29-8833-7252 **China - Xiamen** Tel: 86-592-2388138 **China - Zhuhai** Tel: 86-756-3210040	**India - Bangalore** Tel: 91-80-3090-4444 **India - New Delhi** Tel: 91-11-4160-8631 **India - Pune** Tel: 91-20-4121-0141 **Japan - Osaka** Tel: 81-6-6152-7160 **Japan - Tokyo** Tel: 81-3-6880- 3770 **Korea - Daegu** Tel: 82-53-744-4301 **Korea - Seoul** Tel: 82-2-554-7200 **Malaysia - Kuala Lumpur** Tel: 60-3-7651-7906 **Malaysia - Penang** Tel: 60-4-227-8870 **Philippines - Manila** Tel: 63-2-634-9065 **Singapore** Tel: 65-6334-8870 **Taiwan - Hsin Chu** Tel: 886-3-577-8366 **Taiwan - Kaohsiung** Tel: 886-7-213-7830 **Taiwan - Taipei** Tel: 886-2-2508-8600 **Thailand - Bangkok** Tel: 66-2-694-1351 **Vietnam - Ho Chi Minh** Tel: 84-28-5448-2100	**Austria - Wels** Tel: 43-7242-2244-39 Fax: 43-7242-2244-393 **Denmark - Copenhagen** Tel: 45-4485-5910 Fax: 45-4485-2829 **Finland - Espoo** Tel: 358-9-4520-820 **France - Paris** Tel: 33-1-69-53-63-20 Fax: 33-1-69-30-90-79 **Germany - Garching** Tel: 49-8931-9700 **Germany - Haan** Tel: 49-2129-3766400 **Germany - Heilbronn** Tel: 49-7131-72400 **Germany - Karlsruhe** Tel: 49-721-625370 **Germany - Munich** Tel: 49-89-627-144-0 Fax: 49-89-627-144-44 **Germany - Rosenheim** Tel: 49-8031-354-560 **Israel - Hod Hasharon** Tel: 972-9-775-5100 **Italy - Milan** Tel: 39-0331-742611 Fax: 39-0331-466781 **Italy - Padova** Tel: 39-049-7625286 **Netherlands - Drunen** Tel: 31-416-690399 Fax: 31-416-690340 **Norway - Trondheim** Tel: 47-72884388 **Poland - Warsaw** Tel: 48-22-3325737 **Romania - Bucharest** Tel: 40-21-407-87-50 **Spain - Madrid** Tel: 34-91-708-08-90 Fax: 34-91-708-08-91 **Sweden - Gothenberg** Tel: 46-31-704-60-40 **Sweden - Stockholm** Tel: 46-8-5090-4654 **UK - Wokingham** Tel: 44-118-921-5800 Fax: 44-118-921-5820

© 2015–2024 Microchip Technology Inc. and its subsidiaries

ENTEGRECİ

Bu belge www.entegreci.com üzerinden sunulmaktadır.

Elektronik komponent tedarikinde Entegreci

Entegreci, Eskişehir merkezli, Türkiye geneline satış yapan bir elektronik komponent mağazasıdır. Entegreler (IC), mikrodenetleyiciler, transistörler, diyotlar, pasif elemanlar, konnektörler, modüller ve geliştirme kartları tek adetten seri üretim adetlerine kadar satılır. Ürün sayfalarında güncel stok durumunu, fiyatı ve datasheet bağlantısını bulabilirsiniz.

Parça koduyla arama

Üretici parça numarasını yazın; stok ve fiyatı hemen görün.

www.entegreci.com

Ürün kategorileri

Entegreden kapasitöre tüm elektronik komponent kategorileri.

Kategorilere göz atın

Üreticiler

Aradığınız üreticinin ürünlerini tek sayfada inceleyin.

Üreticileri görün

Toplu alım ve teklif

Listede olmayan ya da yüksek adetli parçalar için teklif isteyin.

Teklif isteyin

www.entegreci.com | **destek@entegreci.com** | **0850 305 90 34**

Entegreci is an online electronic components store based in Türkiye. Search by manufacturer part number to see stock, prices and datasheets for integrated circuits, microcontrollers, transistors, passive components and connectors, or request a quote for parts that are not listed.

Bu sayfa Entegreci tarafından eklenmiştir. Belgenin önceki sayfaları asıl yayıncısına aittir ve içeriği değiştirilmemiştir; en güncel sürüm için belgenin yayıncısına başvurun.