ICL7663S

CMOS Programmable Micropower Positive Voltage Regulator

FN3180
Rev 6.00
October 2, 2015

The ICL7663S Super Programmable Micropower Voltage Regulator is a low power, high efficiency positive voltage regulator which accepts 1.6V to 16V inputs and provides adjustable outputs from 1.3V to 16V at currents up to 40mA.

It is a direct replacement for the industry standard ICL7663B offering ***wider*** operating voltage and temperature ranges, ***improved*** output accuracy (ICL7663SA), better temperature coefficient, ***guaranteed*** maximum supply current, and guaranteed line and load regulation. All improvements are highlighted in the electrical characteristics section. ***Critical parameters are guaranteed over the entire commercial and industrial temperature ranges.*** The ICL7663S/SA programmable output voltage is set by two external resistors. The 1% reference accuracy of the ICL7663SA eliminates the need for trimming the output voltage in most applications.

The ICL7663S is well suited for battery powered supplies, featuring 4µA quiescent current, low V_{IN} to V_{OUT} differential, output current sensing and logic input level shutdown control. In addition, the ICL7663S has a negative temperature coefficient output suitable for generating a temperature compensated display drive voltage for LCD displays.

Pinout

ICL7663S
(PDIP, SOIC)
TOP VIEW

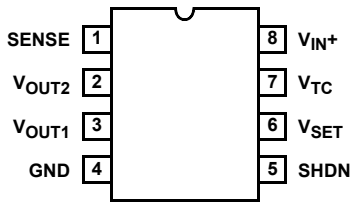

Features

- *Guaranteed* 10µA Maximum Quiescent Current Over *All* Temperature Ranges
- *Wider* Operating Voltage Range - 1.6V to 16V
- *Guaranteed* Line and Load Regulation Over *Entire* Operating Temperature Range *Optional*
- 1% Output Voltage Accuracy (ICL7663SA)
- Output Voltage Programmable from 1.3V to 16V
- *Improved* Temperature Coefficient of Output Voltage
- 40mA Minimum Output Current with Current Limiting
- Output Voltages with Programmable Negative Temperature Coefficients
- Output Shutdown via Current-Limit Sensing or External Logic Level
- Low Input-to-Output Voltage Differential
- Improved Direct Replacement for Industry Standard ICL7663B and Other Second-Source Products
- Pb-Free Plus Anneal Available (RoHS Compliant)

Applications

- Low-Power Portable Instrumentation
- Pagers
- Handheld Instruments
- LCD Display Modules
- Remote Data Loggers
- Battery-Powered Systems

Ordering Information

PART NUMBER	TEMP. RANGE (°C)	PACKAGE	PKG. DWG. #
ICL7663SCBA* **(No longer available, recommended replacement: ICL7663SCBAZA)**	0 to 70	8 Ld SOIC (N)	M8.15
ICL7663SCBAZA* (See Note)	0 to 70	8 Ld SOIC (N) (Pb-free)	M8.15
ICL7663SCPA **(No longer available, recommended replacement: ICL7663SCPAZ)**	0 to 70	8 Ld PDIP	E8.3
ICL7663SCPAZ (See Note)	0 to 70	8 Ld PDIP** (Pb-free)	E8.3
ICL7663SACBA* **(No longer available, recommended replacement: ICL7663SACBAZA, ICL7663SACBAZA-T)**	0 to 70	8 Ld SOIC (N)	M8.15
ICL7663SACBAZA* (See Note)	0 to 70	8 Ld SOIC (N) (Pb-free)	M8.15
ICL7663SACPA	0 to 70	8 Ld PDIP	E8.3
ICL7663SAIBAZA (See Note)	-25 to 85	8 Ld SOIC (N) (Pb-free)	M8.15

*Add “-T” suffix to part number for tape and reel packaging.

**Pb-free PDIPs can be used for through hole wave solder processing only. They are not intended for use in Reflow solder processing applications.

NOTE: Intersil Pb-free plus anneal products employ special Pb-free material sets; molding compounds/die attach materials and 100% matte tin plate termination finish, which are RoHS compliant and compatible with both SnPb and Pb-free soldering operations. Intersil Pb-free products are MSL classified at Pb-free peak reflow temperatures that meet or exceed the Pb-free requirements of IPC/JEDEC J STD-020.

Absolute Maximum Ratings

Input Supply Voltage . . . . . +18V
Any Input or Output Voltage (Note 1)
Terminals 1, 2, 3, 5, 6, 7 . . . . . V_{IN}+ 0.3V to GND -0.3V
Output Source Current
Terminal 2 . . . . . 50mA
Terminal 3 . . . . . 25mA
Output Sinking Current
Terminal 7 . . . . . -10mA

Operating Conditions

Temperature Range
ICL7663SC . . . . . 0°C to 70°C
ICL7663SI . . . . . -25°C to 85°C

Thermal Information

Thermal Resistance (Typical, Note 2)	θ_{JA} (°C/W)	θ_{JC} (°C/W)
CERDIP Package	115	30
PDIP Package*	150	N/A
Plastic SOIC Package	180	N/A

Maximum Junction Temperature
PDIP Package . . . . . 150°C
CERDIP Package . . . . . 175°C
Maximum Storage Temperature Range . . . . . -65°C to 150°C
Maximum Lead Temperature (Soldering 10s) . . . . . 300°C
(SOIC - Lead Tips Only)

*Pb-free PDIPs can be used for through hole wave solder processing only. They are not intended for use in Reflow solder processing applications.

CAUTION: Stresses above those listed in "Absolute Maximum Ratings" may cause permanent damage to the device. This is a stress only rating and operation of the device at these or any other conditions above those indicated in the operational sections of this specification is not implied.

NOTES:

1. Connecting any terminal to voltages greater than ($V+_{IN}$ + 0.3V) or less than (GND - 0.3V) may cause destructive device latch-up. It is recommended that no inputs from sources operating on external power supplies be applied prior to ICL7663S power-up.
2. θ_{JA} is measured with the component mounted on an evaluation PC board in free air.

Electrical Specifications

Specifications Below Applicable to Both ICL7663S and ICL7663SA, Unless Otherwise Specified. $V+_{IN}$ = 9V, V_{OUT} = 5V, T_A = 25°C, Unless Otherwise Specified. Notes 4, 5. See Test Circuit, Figure 7

PARAMETER	SYMBOL	TEST CONDITIONS		MIN	TYP	MAX	UNITS
Input Voltage	$V+_{IN}$	ICL7663S	T_A = 25°C	1.5	-	16	V
			0°C < T_A < 70°C	1.6	-	16	V
			-25°C < T_A < 85°C	1.6	-	16	V
		ICL7663SA	0°C < T_A < 70°C	1.6	-	16	V
			-25°C < T_A < 85°C	1.6	-	16	V
Quiescent Current	I_Q	1.4V ≤ V_{OUT} ≤ 8.5V, No Load					
		$V+_{IN}$ = 9V	0°C < T_A < 70°C	-	-	10	µA
			-25°C < T_A < 85°C	-	-	10	µA
		$V+_{IN}$ = 16V	0°C < T_A < 70°C	-	-	12	µA
			-25°C < T_A < 85°C	-	-	12	µA
Reference Voltage	V_{SET}	I_{OUT1} = 100µA, V_{OUT} = V_{SET}					
		ICL7663S	T_A = 25°C	1.2	1.3	1.4	V
		ICL7663SA	T_A = 25°C	1.275	1.29	1.305	V
Temperature Coefficient	$\frac{\Delta V_{SET}}{\Delta T}$	0°C < T_A < 70°C		-	100	-	ppm
		-25°C < T_A < 85°C		-	100	-	ppm
Line Regulation	$\frac{\Delta V_{SET}}{V_{SET}, \Delta V_{IN}}$	2V < V_{IN} < 15V	0°C < T_A < 70°C	-	0.03	-	%/V
			-25°C < T_A < 85°C	-	0.03	0.3	%/V
V_{SET} Input Current	I_{SET}	0°C < T_A < 70°C		-	0.01	10	nA
		-25°C < T_A < 85°C		-	0.01	10	nA
Shutdown Input Current	I_{SHDN}			-	±0.01	10	nA
Shutdown Input Voltage	V_{SHDN}	V_{SHDN} HI: Both V_{OUT} Disabled		1.4	-	-	V
		V_{SHDN} LO: Both V_{OUT} Enable		-	-	0.3	V
Sense Pin Input Current	I_{SENSE}			-	0.01	10	nA

Electrical Specifications Specifications Below Applicable to Both ICL7663S and ICL7663SA, Unless Otherwise Specified. $V+_{IN}$ = 9V, V_{OUT} = 5V, T_A = 25°C, Unless Otherwise Specified. Notes 4, 5. See Test Circuit, Figure 7 **(Continued)**

PARAMETER	SYMBOL	TEST CONDITIONS		MIN	TYP	MAX	UNITS
Sense Pin Input Threshold	V_{CL}			-	0.5	-	V
Input-Output Saturation Resistance (Note 3)	R_{SAT}	$V+_{IN}$ = 2V, I_{OUT1} = 1mA		-	170	350	Ω
		$V+_{IN}$ = 9V, I_{OUT1} = 2mA		-	50	100	Ω
		$V+_{IN}$ = 15V, I_{OUT1} = 5mA		-	35	70	Ω
Load Regulation	$\frac{\Delta V_{OUT}}{\Delta I_{OUT}}$	1mA < I_{OUT2} < 20mA		-	1	3	Ω
		50µA < I_{OUT1} < 5mA		-	2	10	Ω
Available Output Current (V_{OUT2})	I_{OUT2}	3V ≤ V_{IN} ≤ 16V, V_{IN} - V_{OUT2} = 1.5V		40	-	-	mA
Negative Tempco Output (Note 4)	V_{TC}	Open Circuit Voltage		-	0.9	-	V
	I_{TC}	Maximum Sink Current		0	8	2.0	mA
Temperature Coefficient	$\frac{\Delta V_{TC}}{\Delta T}$	Open Circuit		-	+2.5	-	mV/°C
Minimum Load Current	$I_{L(MIN)}$	Includes V_{SET} Divider	T_A = 25°C	-	-	1.0	µA
			0°C < T_A < 70°C	-	0.2	5.0	µA
			-25°C < T_A < 85°C	-	0.2	5.0	µA

NOTES:

3. This parameter refers to the saturation resistance of the MOS pass transistor. The minimum input-output voltage differential at low current (under 5mA), can be determined by multiplying the load current (including set resistor current, but not quiescent current) by this resistance.
4. This output has a positive temperature coefficient. Using it in combination with the inverting input of the regulator at V_{SET}, a negative coefficient results in the output voltage. See Figure 9 for details. Pin will not source current.
5. All pins are designed to withstand electrostatic discharge (ESD) levels in excess of 2000V.
6. All significant improvements over the industry standard ICL7663 are highlighted.

Functional Diagram

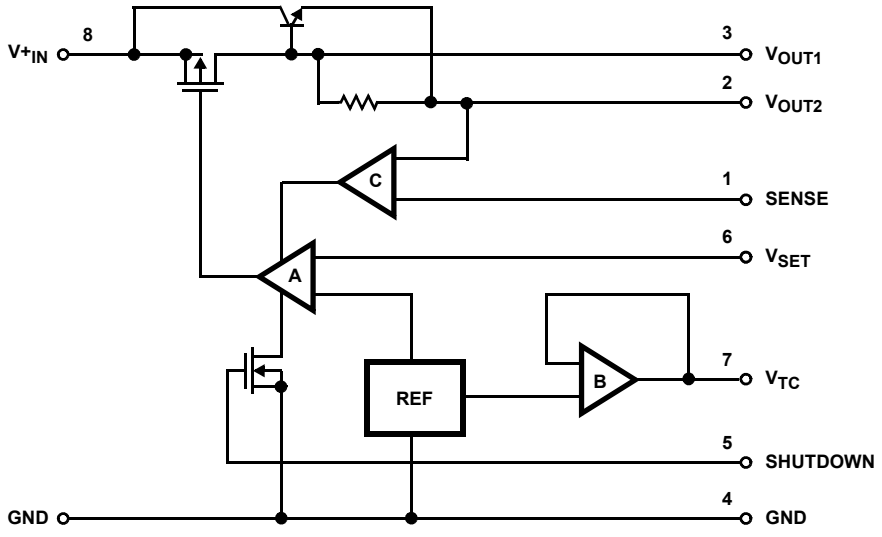

Typical Performance Curves

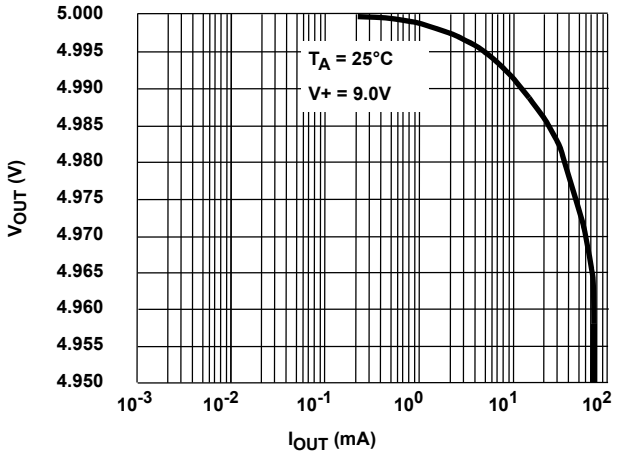

FIGURE 1. V_{OUT2} OUTPUT VOLTAGE AS A FUNCTION OF OUTPUT CURRENT

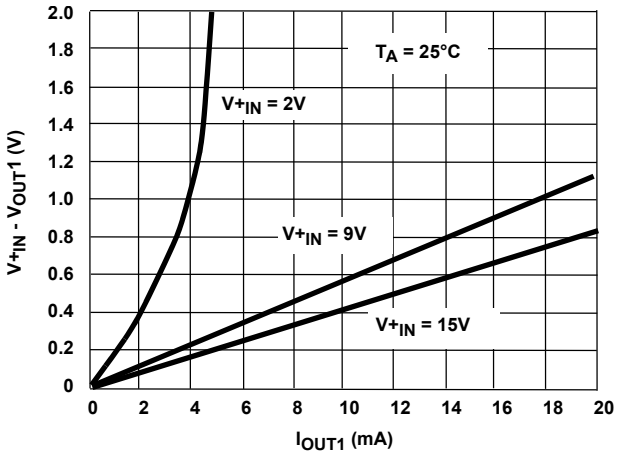

FIGURE 2. V_{OUT1} INPUT-OUTPUT DIFFERENTIAL vs OUTPUT CURRENT

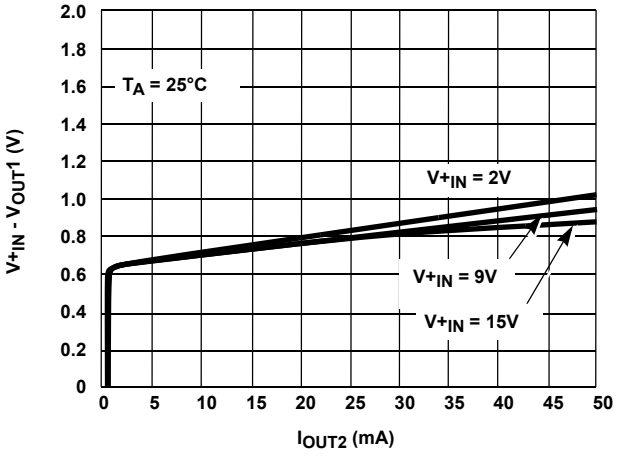

FIGURE 3. V_{OUT2} INPUT-OUTPUT DIFFERENTIAL vs OUTPUT CURRENT

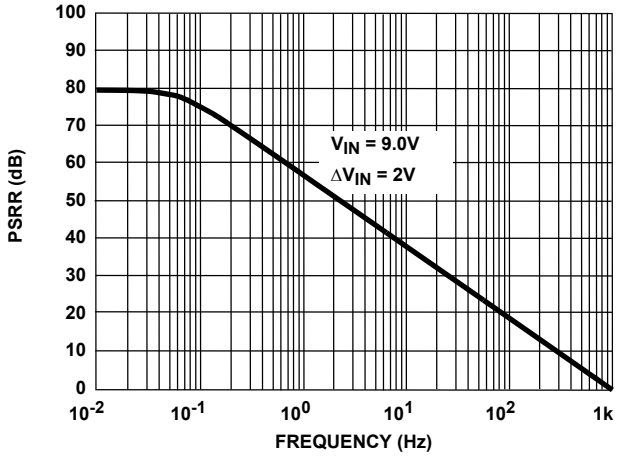

FIGURE 4. NPUT POWER SUPPLY REJECTION RATIO

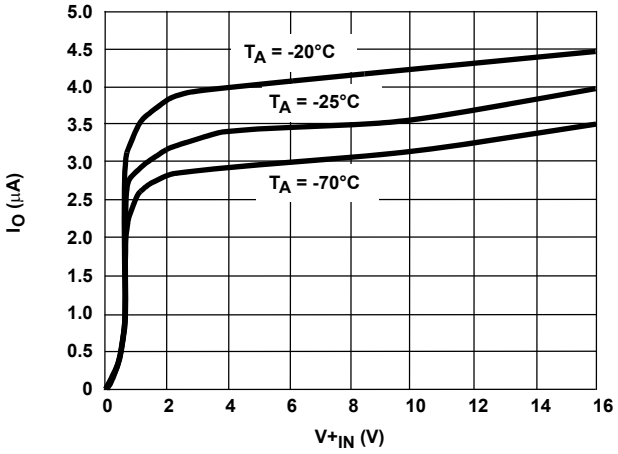

FIGURE 5. QUIESCENT CURRENT AS A FUNCTION OF INPUT VOLTAGE

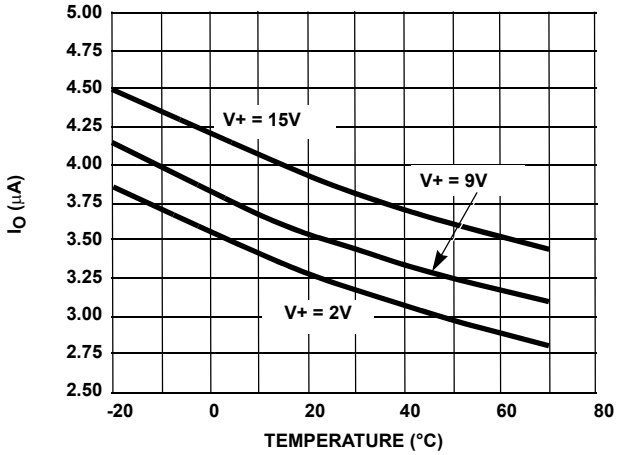

FIGURE 6. QUIESCENT CURRENT AS A FUNCTION OF TEMPERATURE

Detailed Description

The ICL7663S is a CMOS integrated circuit incorporating all the functions of a voltage regulator plus protection circuitry on a single monolithic chip. Referring to the Functional Diagram, the main blocks are a bandgap-type voltage reference, an error amplifier, and an output driver with both PMOS and NPN pass transistors.

The bandgap output voltage, trimmed to 1.29V ±15mV for the ICL7663SA, and the input voltage at the V_{SET} terminal are compared in amplifier A. Error amplifier A drives a P-channel pass transistor which is sufficient for low (under about 5mA) currents. The high current output is passed by an NPN bipolar transistor connected as a follower. This configuration gives more gain and lower output impedance.

Logic-controlled shutdown is implemented via a N-Channel MOS transistor. Current-sensing is achieved with comparator C, which functions with the V_{OUT2} terminal. The ICL7663S has an output (V_{TC}) from a buffer amplifier (B), which can be used in combination with amplifier A to generate programmable-temperature-coefficient output voltages.

The amplifier, reference and comparator circuitry all operate at bias levels well below 1µA to achieve extremely low quiescent current. This does limit the dynamic response of the circuits, however, and transients are best dealt with outside the regulator loop.

Basic Operation

The ICL7663S is designed to regulate battery voltages in the 5V to 15V region at maximum load currents of about 5mA to 30mA. Although intended as low power devices, power dissipation limits must be observed. For example, the power dissipation in the case of a 10V supply regulated down to 2V with a load current of 30mA clearly exceeds the power dissipation rating of the Mini-DIP:

$(10 - 2)\ (30)\ (10^{-3}) = 240mW$

The circuit of Figure 8 illustrates proper use of the device.

CMOS devices generally require two precautions: every input pin must go somewhere, and maximum values of applied voltages and current limits must be rigorously observed. Neglecting these precautions may lead to, at the least, incorrect or nonoperation, and at worst, destructive device failure. To avoid the problem of latchup, do not apply inputs to any pins before supply voltage is applied.

Input Voltages - The ICL7663S accepts working inputs of 1.5V to 16V. When power is applied, the rate-of-rise of the input may be hundreds of volts per microsecond. This is potentially harmful to the regulators, where internal operating currents are in the nanoampere range. The 0.047µF capacitor on the device side of the switch will limit inputs to a safe level around 2V/µs. Use of this capacitor is suggested in all applications. In severe rate-of-rise cases, it may be advisable to use an RC network on the SHutDowN pin to delay output turn-on. Battery charging surges, transients, and assorted noise signals should be kept from the regulators by RC filtering, zener protection, or even fusing.

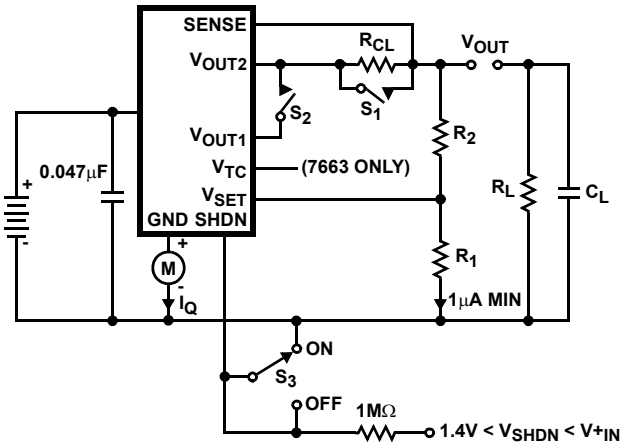

NOTES:

7. S_1 when closed disables output current limiting.
8. Close S_2 for V_{OUT1}, open S_2 for V_{OUT2}.
9. IQ quiescent currents measured at GND pin by meter M.
10. S_3 when ON, permits normal operation, when OFF, shuts down both V_{OUT1} and V_{OUT2}.

FIGURE 7. ICL7663S TEST CIRCUIT

Output Voltages - The resistor divider R_2/R_1 is used to scale the reference voltage, V_{SET}, to the desired output using the formula $V_{OUT} = (1 + R_2/R_1)\ V_{SET}$. Suitable arrangements of these resistors, using a potentiometer, enables exact values for V_{OUT} to be obtained. In most applications the potentiometer may be eliminated by using the ICL7663SA. The ICL7663SA has V_{SET} voltage guaranteed to be 1.29V ±15mV and when used with ±1% tolerance resistors for R_1 and R_2 the initial output voltage will be within ±2.7% of ideal.

The low leakage current of the V_{SET} terminal allows R_1 and R_2 to be tens of megohms for minimum additional quiescent drain current. However, some load current is required for proper operation, so for extremely low-drain applications it is necessary to draw at least 1µA. This can include the current for R_2 and R_1.

Output voltages up to nearly the V_{IN} supply may be obtained at low load currents, while the low limit is the reference voltage. The minimum input-output differential in each regulator is obtained using the V_{OUT1}, terminal. The input-output differential increases to 1.5V when using V_{OUT2}.

Output Currents - Low output currents of less than 5mA are obtained with the least input-output differential from the V_{OUT1} terminal (connect V_{OUT2} to V_{OUT1}). Where higher currents are needed, use V_{OUT2} (V_{OUT1}, should be left open in this case).

High output currents can be obtained only as far as package dissipation allows. It is strongly recommended that output current-limit sensing be used in such cases.

Current-Limit Sensing - The on-chip comparator (C in the Functional Diagram) permits shutdown of the regulator output in the event of excessive current drain. As Figure 8 shows, a current-limiting resistor, R_{CL}, is placed in series with V_{OUT2} and the SENSE terminal is connected to the load side of R_{CL}. When the current through R_{CL} is high enough to produce a voltage drop equal to V_{CL} (0.5V) the voltage feedback is by-passed and the regulator output will be limited to this current. Therefore, when the maximum load current (I_{LOAD}) is determined, simply divide V_{CL} by I_{LOAD} to obtain the value for R_{CL}.

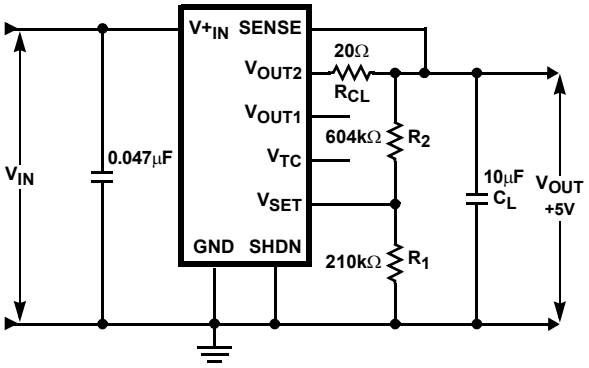

$$V_{OUT} = \frac{R_2 + R_1}{R_1} \quad V_{SET} = 5V$$

$$I_{CL} = \frac{V_{CL}}{R_{CL}} = 25mA$$

FIGURE 8. POSITIVE REGULATOR WITH CURRENT LIMIT

Logic-Controllable Shutdown - When equipment is not needed continuously (e.g., in remote data-acquisition systems), it is desirable to eliminate its drain on the system until it is required. This usually means switches, with their unreliable contacts. Instead, the ICL7663S can be shut down by a logic signal, leaving only I_Q (under 4µA) as a drain on the power source. Since this pin must not be left open, it should be tied to ground if not needed. A voltage of less than 0.3V for the ICL7663S will keep the regulator ON, and a voltage level of more than 1.4V but less than $V+_{IN}$ will turn the outputs OFF. If there is a possibility that the control signal could exceed the regulator input ($V+_{IN}$) the current from this signal should be limited to 100µA maximum by a high value (1MΩ) series resistor. This situation may occur when the logic signal originates from a system powered separately from that of the regulator.

Additional Circuit Precautions - This regulator has poor rejection of voltage fluctuations from AC sources above 10Hz or so. To prevent the output from responding (where this might be a problem), a reservoir capacitor across the load is advised. The value of this capacitor is chosen so that the regulated output voltage reaches 90% of its final value in 20ms. From:

$$I = C\frac{\Delta V}{\Delta t}, C = \frac{(20 \times 10^{-3})}{0.9V_{OUT}} I_{OUT} = 0.022 \frac{I_{OUT}}{V_{OUT}}$$

In addition, where such a capacitor is used, a current-limiting resistor is also suggested (see “Current-Limit Sensing”).

Producing Output Voltages with Negative Temperature Coefficients -The ICL7663S has an additional output which is 0.9V relative to GND and has a tempco of +2.5mV/°C. By applying this voltage to the inverting input of amplifier A (i.e., the V_{SET} pin), output voltages having negative TC may be produced. The TC of the output voltage is controlled by the R_2/R_3 ratio (see Figure 9 and its design equations).

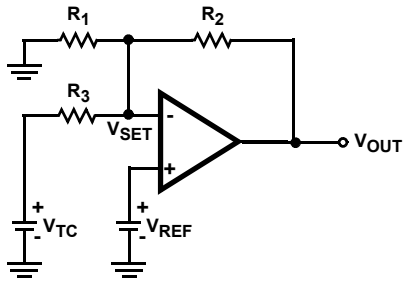

EQ. 1: $V_{OUT} = V_{SET}\left(1 + \frac{R_2}{R_1}\right) + \frac{R_2}{R_3}(V_{SET} - V_{TC})$

EQ. 2: $TC\ V_{OUT} = -\frac{R_2}{R_3}(TC\ V_{TC})$ in mV/°C

Where:V_{SET} = 1.3V
V_{TC} = 0.9V
TCV_{TC} = +2.5mV/°C

FIGURE 9. GENERATING NEGATIVE TEMPERATURE COEFFICIENTS

Applications

Boosting Output Current with External Transistor

The maximum available output current from the ICL7663S is 40mA. To obtain output currents greater than 40mA, an external NPN transistor is used connected as shown in Figure 10.

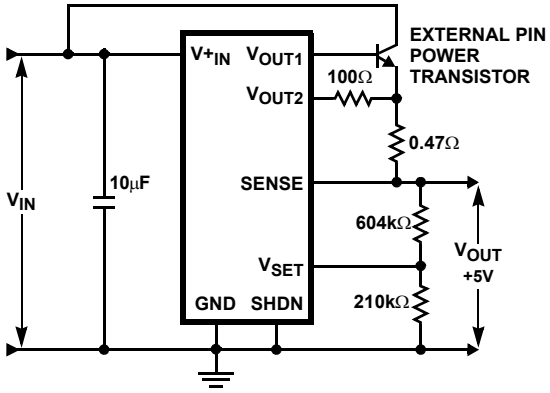

FIGURE 10. BOOSTING OUTPUT CURRENT WITH EXTERNAL TRANSISTOR

Generating a Temperature Compensated Display Drive Voltage

Temperature has an important effect in the variation of threshold voltage in multiplexed LCD displays. As temperature rises, the threshold voltage goes down. For applications where the display temperature varies widely, a temperature compensated display voltage, V_{DISP}, can be generated using the ICL7663S. This is shown in Figure 11 for the ICM7233 triplexed LCD display driver.

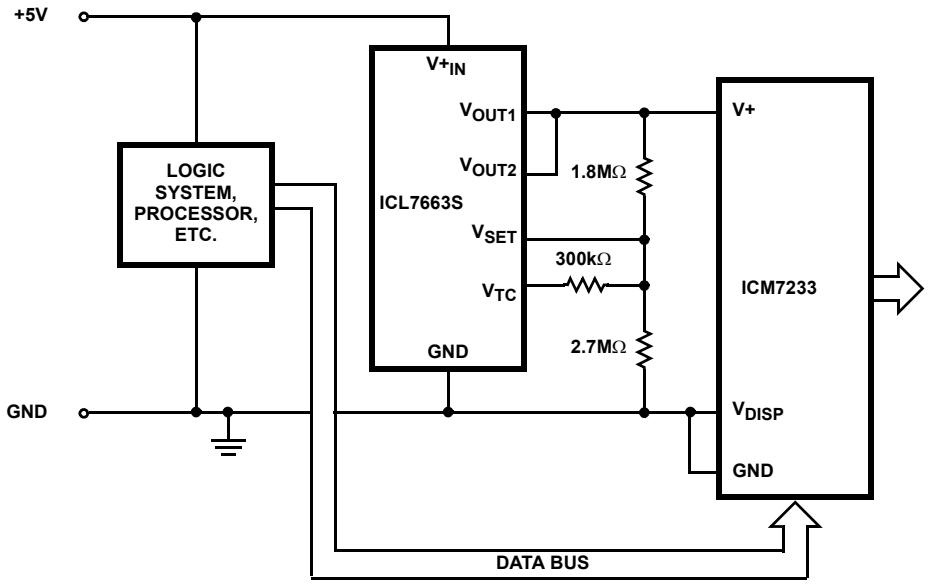

FIGURE 11. GENERATING A MULTIPLEXED LCD DISPLAY DRIVE VOLTAGE

Revision History

The revision history provided is for informational purposes only and is believed to be accurate, but not warranted. Please go to the web to make sure that you have the latest revision.

DATE	REVISION	CHANGE
October 2, 2015	FN3180.6	Updated Ordering Information Table on page 2. Added Revision History and About Intersil sections.

About Intersil

Intersil Corporation is a leading provider of innovative power management and precision analog solutions. The company's products address some of the largest markets within the industrial and infrastructure, mobile computing and high-end consumer markets.

For the most updated datasheet, application notes, related documentation and related parts, please see the respective product information page found at www.intersil.com.

You may report errors or suggestions for improving this datasheet by visiting www.intersil.com/ask.

Reliability reports are also available from our website at www.intersil.com/support

© Copyright Intersil Americas LLC 1999-2015. All Rights Reserved.
All trademarks and registered trademarks are the property of their respective owners.

For additional products, see www.intersil.com/en/products.html

Intersil products are manufactured, assembled and tested utilizing ISO9001 quality systems as noted in the quality certifications found at www.intersil.com/en/support/qualandreliability.html

Intersil products are sold by description only. Intersil may modify the circuit design and/or specifications of products at any time without notice, provided that such modification does not, in Intersil's sole judgment, affect the form, fit or function of the product. Accordingly, the reader is cautioned to verify that datasheets are current before placing orders. Information furnished by Intersil is believed to be accurate and reliable. However, no responsibility is assumed by Intersil or its subsidiaries for its use; nor for any infringements of patents or other rights of third parties which may result from its use. No license is granted by implication or otherwise under any patent or patent rights of Intersil or its subsidiaries.

For information regarding Intersil Corporation and its products, see www.intersil.com

ENTEGRECİ

Bu belge www.entegreci.com üzerinden sunulmaktadır.

Elektronik komponent tedarikinde Entegreci

Entegreci, Eskişehir merkezli, Türkiye geneline satış yapan bir elektronik komponent mağazasıdır. Entegreler (IC), mikrodenetleyiciler, transistörler, diyotlar, pasif elemanlar, konnektörler, modüller ve geliştirme kartları tek adetten seri üretim adetlerine kadar satılır. Ürün sayfalarında güncel stok durumunu, fiyatı ve datasheet bağlantısını bulabilirsiniz.

Parça koduyla arama

Üretici parça numarasını yazın; stok ve fiyatı hemen görün.

www.entegreci.com

Ürün kategorileri

Entegreden kapasitöre tüm elektronik komponent kategorileri.

Kategorilere göz atın

Üreticiler

Aradığınız üreticinin ürünlerini tek sayfada inceleyin.

Üreticileri görün

Toplu alım ve teklif

Listede olmayan ya da yüksek adetli parçalar için teklif isteyin.

Teklif isteyin

www.entegreci.com | **destek@entegreci.com** | **0850 305 90 34**

Entegreci is an online electronic components store based in Türkiye. Search by manufacturer part number to see stock, prices and datasheets for integrated circuits, microcontrollers, transistors, passive components and connectors, or request a quote for parts that are not listed.

Bu sayfa Entegreci tarafından eklenmiştir. Belgenin önceki sayfaları asıl yayıncısına aittir ve içeriği değiştirilmemiştir; en güncel sürüm için belgenin yayıncısına başvurun.