Family overview
Support

Low dropout, low noise, linear voltage post regulator, 500 mA

Features

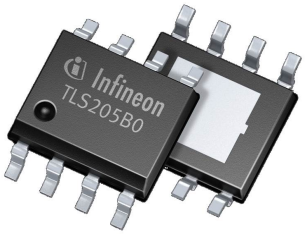

RoHS

AEC Qualified

- Low noise down to 24 μV_{RMS} (BW = 10 Hz to 100 kHz)
- 500 mA current capability
- Low quiescent current: 30 µA
- Wide input voltage range up to 20 V
- Internal circuitry working down to 2.3 V
- 2.5% output voltage accuracy (over full temperature and load range)
- Low dropout voltage: 320 mV
- Very low shutdown current: < 1 µA
- No protection diodes needed
- Fixed output voltage: 3.3 V
- Adjustable version with output voltage from 1.22 V to 20 V
- Stable with output capacitor ≥ 3.3 µF
- Stable with aluminium, tantalum, or ceramic output capacitors
- Reverse polarity protection
- No reverse current
- Protected against overcurrent and overtemperature
- PG-DSO-8 exposed-pad package
- Green Product (RoHS-compliant)

Potential applications

Suitable for use in automotive electronics as post regulator

Product validation

Qualified for automotive applications.

Product validation according to AEC-Q100.

Description

The OPTIREG™ linear TLS205B0EJ is a micropower, low-noise, low-dropout voltage regulator capable of supplying an output current of 500 mA with a dropout voltage of 320 mV. With a very low quiescent current of 30 µA, the TLS205B0EJ voltage regulator is perfectly suited for automotive battery-powered systems.

A key feature of the TLS205B0EJ is its low output noise. By adding an external 10 nF bypass capacitor, output noise values down to 24 μV_{RMS} over a bandwidth from 10 Hz to 100 kHz can be reached for the adjustable variant. The voltage regulator is stable with an output capacitor as small as 3.3 µF. Small ceramic capacitors can be used without the series resistance required by many other linear voltage regulators.

Internal protection circuitry includes reverse battery protection, current limiting, and reverse current protection.

The TLS205B0EJ is available as a fixed output variant, TLS205B0EJ V33, providing a stable 3.3 V output voltage, as well as an adjustable variant TLS205B0EJV with 1.22 V voltage reference, both in a PG-DSO-8 exposed-pad package.

Type	Package	Marking
TLS205B0EJV	PG-DSO-8 exposed-pad	205B0V
TLS205B0EJ V33	PG-DSO-8 exposed-pad	205B0V33

Table of contents

Table of contents 2
1 Block diagram 3
2 Pin configuration 4
2.1 Pin assignment 4
2.2 Pin definitions and functions 4
3 General product characteristics 6
3.1 Absolute maximum ratings 6
3.2 Functional range 7
3.3 Thermal resistance 8
4 Electrical characteristics 9
4.1 Typical performance characteristics 13
5 Application information 22
5.1 Adjustable operation 23
5.2 Kelvin sense connection 23
5.3 Bypass capacitance and low noise performance 23
5.4 Output capacitance and transient response 24
5.5 Protection features 24
6 Package information 26
Revision history 27
Disclaimer 28

1 Block diagram

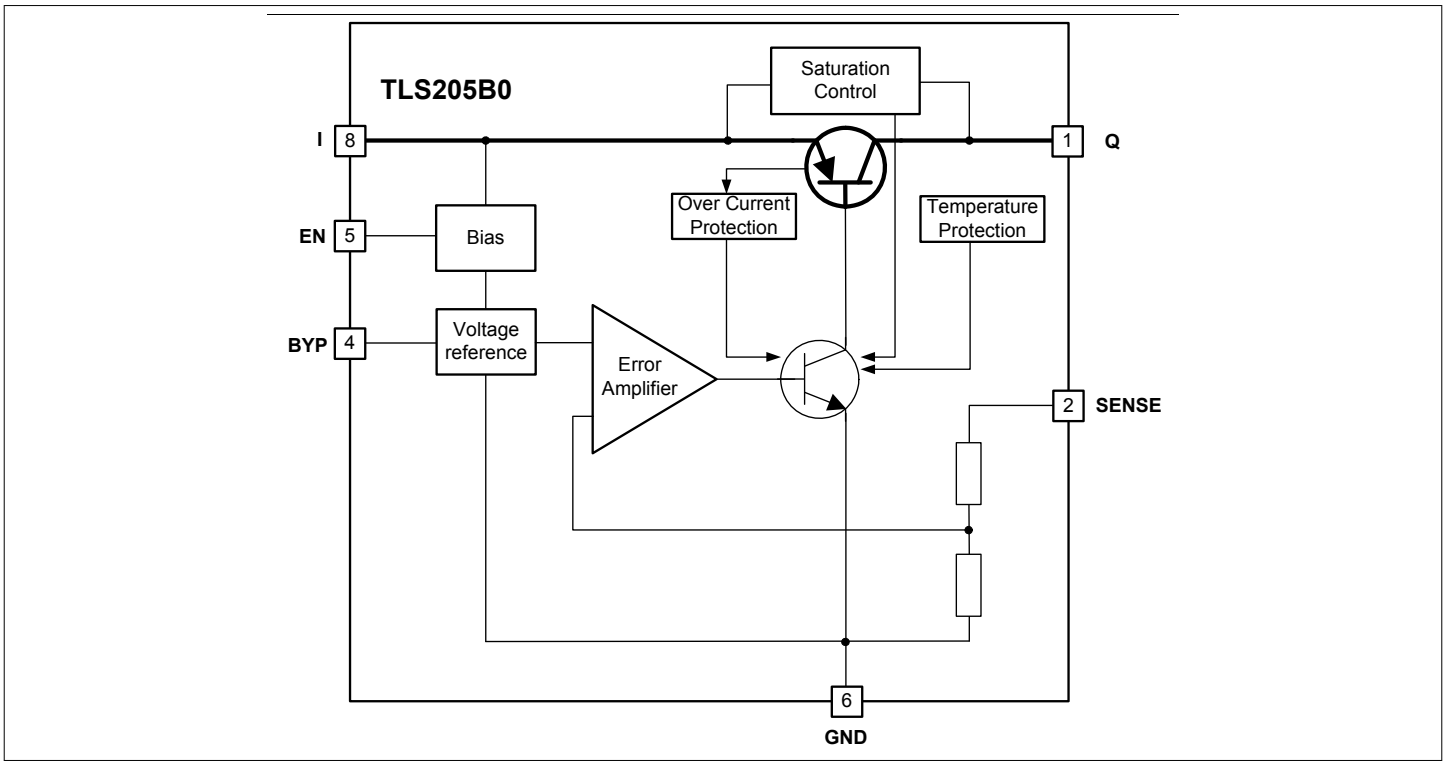

Figure 1 Block diagram TLS205B0EJ V33

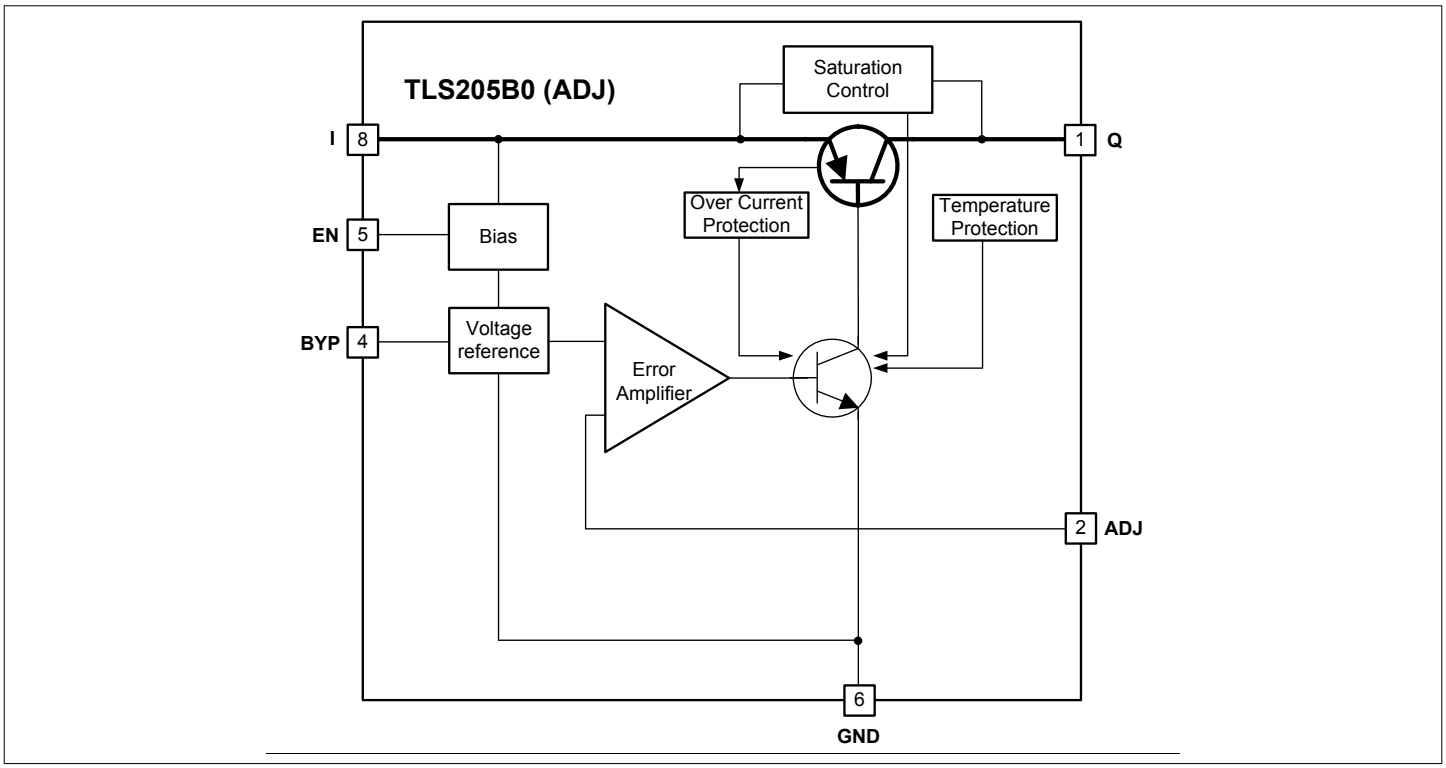

Figure 2 Block diagram TLS205B0EJV

2 Pin configuration

2.1 Pin assignment

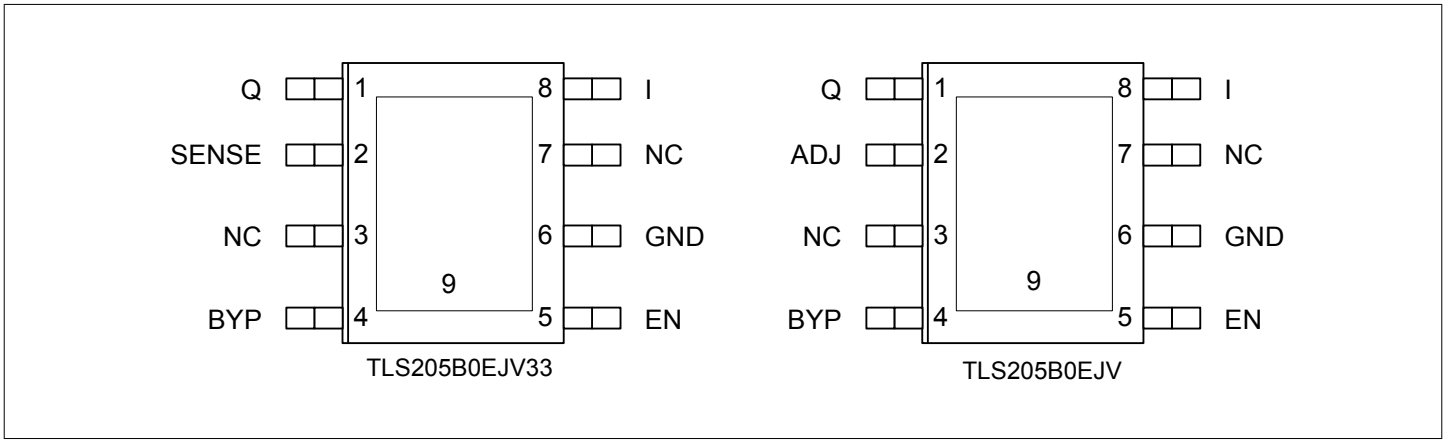

Figure 3 Pin configuration PG-DSO-8 exposed pad

2.2 Pin definitions and functions

Table 1 Pin definitions and functions

Pin	Symbol	Function
1	Q	**Output.** Supplies power to the load. For this pin, an output capacitor with capacitance of at least 3.3 µF is required to prevent oscillations. Larger output capacitors may be required for applications with large transient loads in order to limit peak voltage transients or when the regulator is applied in conjunction with a bypass capacitor. For more details, refer to Application information.
2	SENSE (TLS205B0EJ V33)	**Output sense.** For the fixed voltage version the SENSE pin is the input to the error amplifier. This allows an optimized regulation performance in case of small voltage drops R_p that occur between regulator and load. In applications where such drops are relevant, they can be eliminated by connecting the SENSE pin directly at the load. In standard configurations, the SENSE pin can be connected directly to Q. For further details, refer to the section Kelvin sense connection.
2	ADJ (TLS205B0EJV)	**Adjust.** For the adjustable version the ADJ pin is the input to the error amplifier. The ADJ pin voltage is 1.22 V referenced to ground and allows a output voltage range from 1.22 V to 20 V - V_{DR}. The ADJ pin is internally clamped to ±7 V. Please note that the bias current of the ADJ pin is flowing into the pin. Its typical value of 60 nA shows a good stability over temperature. For further details please refer to Typical performance graph Adjust pin bias current $I_{bias,ADJ}$ versus junction temperature T_j
3, 7	NC	**Not connected.** The NC pin has no connection to any internal circuitry. Connect either to GND or leave open.
4	BYP	**Bypass.** The BYP pin is used to bypass the reference of the TLS205B0EJ to achieve low noise performance. The BYP pin is clamped internally to ±0.6 V (that is, one V_{BE}). A small capacitor from the output Q to the BYP pin bypasses the reference to lower the output voltage noise. [1)] If not used, this pin must be left unconnected.

(table continues...)

Table 1 (continued) Pin definitions and functions

Pin	Symbol	Function
5	EN	**Enable.** Using the EN pin, the TLS205B0EJ can be put into a low-power shutdown state. The output is off when the EN is pulled low. The EN pin can be driven either by 3.3 V or 5 V logic, or by open-collector logic with a pull-up resistor. The pull-up resistor is required to supply the pull-up current of the open-collector gate [2)] and the EN pin current.[3)] Note that if the EN pin is not used, it must be connected to V_I. It must not be left floating.
6	GND	**Ground.** For the adjustable version (TLS205B0EJV) connect the bottom of the output voltage setting resistor divider directly to the GND pin for optimum load regulation performance.
8	I	**Input.** The device is supplied by the input pin I. A capacitor at the input pin is required if the device is more than 15 centimeters away from the main input filter capacitor or if a non-negligible inductance is present at the input I. [4)] The TLS205B0EJ is designed to withstand reverse voltages on the input pin I with respect to GND and output Q. In case of reverse input (for example, due to an incorrectly attached battery), the device acts as if there were a diode in series with its input. In this way, no reverse current flows into the regulator and no reverse voltage appears at the load. Hence, the device will protect both itself and the load.
9	Tab	**Exposed pad.** To ensure proper thermal performance solder pin 9 (exposed-pad) to the PCB ground and tie directly to pin 6 (GND).

1) A maximum value of 10 nF can be used for reducing output voltage noise over the bandwidth from 10 Hz to 100 kHz.
2) Normally several microamperes.
3) Typical value is 1 µA.
4) In general, the output impedance of a battery rises with the frequency, so it is advisable to include a bypass capacitor in battery-powered circuits. Depending on the specific conditions, an input capacitor in the range of 1 µF to 10 µF is usually sufficient.

3 General product characteristics

3.1 Absolute maximum ratings

Table 2 Absolute maximum ratings [1)]

T_j = -40°C to +150°C; all voltages with respect to ground, positive current flowing into pin (unless otherwise specified)

Parameter	Symbol	Values			Unit	Note or Test Condition	Number
		Min.	Typ.	Max.			
Input voltage							
Voltage	V_I	-20	–	20	V	–	P_4.1.1
Output voltage							
Voltage	V_Q	-20	–	20	V	–	P_4.1.2
Input-to-output differential voltage	V_I - V_Q	-20	–	20	V	–	P_4.1.3
Sense pin							
Voltage	V_{SENSE}	-20	–	20	V	–	P_4.1.4
ADJ pin							
Voltage	V_{ADJ}	-7	–	7	V	–	P_4.1.5
BYP pin							
Voltage	V_{BYP}	-0.6	–	0.6	V	–	P_4.1.6
Enable pin							
Voltage	V_{EN}	-20	–	20	V	–	P_4.1.7
Temperatures							
Junction temperature	T_j	-40	–	150	°C	–	P_4.1.8
Storage temperature	T_{stg}	-55	–	150	°C	–	P_4.1.9
ESD robustness							
ESD robustness all pins (HBM)	$V_{ESD,HBM}$	-2	–	2	kV	[2)]	P_4.1.10
ESD robustness all pins (CDM)	$V_{ESD,CDM}$	-1	–	1	kV	[3)]	P_4.1.11

1) Not subject to production testing, specified by design.
2) Human body model (HBM) robustness according to ANSI/ESDA/JEDEC JS001 (1.5 kΩ, 100 pF).
3) Charged device model (CDM) robustness according to JEDEC JESD22-C101.

***Notes**:*

1. *Stresses above the ones listed here may cause permanent damage to the device. Exposure to absolute maximum rating conditions for extended periods may affect device reliability.*

2. *Integrated protection functions are designed to prevent IC destruction under fault conditions described in the data sheet. Fault conditions are considered to be outside the normal operating range. Protection functions are not designed for continuous repetitive operation.*

3.2 Functional range

Table 3 Functional range

Parameter	Symbol	Values			Unit	Note or Test Condition	Number
		Min.	Typ.	Max.			
Input voltage range TLS205B0EJ V33	V_I	3.8	–	20	V	–	P_4.2.1
Input voltage range TLS205B0EJV	V_I	2.3	–	20	V	1)	P_4.2.2
Output capacitor requirements for stability	C_Q	3.3	–	–	µF	2) C_{BYP} = 0 nF	P_4.2.3
Output capacitor requirements for stability	C_Q	6.8	–	–	µF	2) 0 nF < C_{BYP} ≤ 10 nF	P_4.2.4
Output capacitor equivalent series resistance	*ESR*	–	–	3	Ω	2) 3)	P_4.2.5
Operating junction temperature	T_j	-40	–	125	°C	–	P_4.2.6

1) The minimum limit of the functional range V_I is tested and specified with the ADJ pin connected to the Q pin.
2) For further details, see the corresponding graph.
3) C_{BYP} = 0 nF, C_Q ≥ 3.3 µF. Note that for cases where a bypass capacitor is used at BYP, depending on the actual applied capacitance of C_Q and C_{BYP}, a minimum requirement for ESR of C_Q may apply.

***Note**: Within the functional or operating range, the IC operates as described in the circuit description. The electrical characteristics are specified within the conditions given in the Electrical characteristics table.*

3.3 Thermal resistance

***Note**: This thermal data was generated in accordance with JEDEC JESD51 standards. For more information, go to www.jedec.org.*

Table 4 Thermal resistance [1)]

Parameter	Symbol	Values			Unit	Note or Test Condition	Number
		Min.	Typ.	Max.			
Junction to case	R_{thJC}	–	7	–	K/W	–	P_4.3.1
Junction to ambient	R_{thJA}	–	39	–	K/W	[2)] –	P_4.3.2
Junction to ambient	R_{thJA}	–	155	–	K/W	[3)] Footprint only	P_4.3.3
Junction to ambient	R_{thJA}	–	66	–	K/W	[3)] 300 mm^2 heatsink area on PCB	P_4.3.4
Junction to ambient	R_{thJA}	–	52	–	K/W	[3)] 600 mm^2 heatsink area on PCB	P_4.3.5

1) Not subject to production test, specified by design.
2) The specified R_{thJA} value is defined according to JEDEC JESD51-2,-5,-7 with natural convection on an FR4 2s2p board. The product (chip and package) was simulated on a 76.2 × 114.3 x 1.5 mm^3 board with two inner copper layers (2 × 70 µm Cu, 2 × 35 µm Cu). Where applicable, a thermal via array under the exposed pad contacted the first inner copper layer.
3) The specified R_{thJA} value is defined according to JEDEC JESD 51-3 with natural convection on an FR4 1s0p board. The product (chip and package) was simulated on a 76.2 × 114.3 × 1.5 mm^3 board with one copper layer (1 × 70 µm Cu).

4 Electrical characteristics

Table 5 Electrical characteristics

-40°C < T_j < 125°C; all voltages with respect to ground; positive current defined flowing out of pin; unless otherwise specified.

Parameter	Symbol	Values			Unit	Note or Test Condition	Number
		Min.	Typ.	Max.			
Minimum operating voltage							
Minimum operating voltage	$V_{I,min}$	–	1.8	2.3	V	1) 2) 3) I_Q = 500 mA	P_5.0.1
Output voltage							
Output voltage TLS205B0EJ V33	V_Q	3.220	3.30	3.380	V	4) 1 mA < I_Q < 500 mA; 4.3 V < V_I < 20 V	P_5.0.2
Output voltage TLS205B0EJV	V_Q	1.190	1.220	1.250	V	3) 4) 1 mA < I_Q < 500 mA; 2.3 V < V_I < 20 V	P_5.0.3
Line regulation							
Line regulation TLS205B0EJ V33	ΔV_Q	–	1	20	mV	ΔV_I = 3.8 V to 20 V; I_Q = 1 mA	P_5.0.4
Line regulation TLS205B0EJV	ΔV_Q	–	1	20	mV	3) ΔV_I = 2.0 V to 20 V; I_Q = 1 mA	P_5.0.5
Load regulation							
Load regulation TLS205B0EJ V33	ΔV_Q	–	9	22	mV	T_j = 25°C; V_I = 4.3 V; ΔI_Q = 1 to 500 mA	P_5.0.6
Load regulation TLS205B0EJ V33	ΔV_Q	–	–	38	mV	V_I = 4.3 V; ΔI_Q = 1 to 500 mA	P_5.0.7
Load regulation TLS205B0EJV	ΔV_Q	–	4	8	mV	3) T_j = 25°C ; V_I = 2.3 V; ΔI_Q = 1 to 500 mA	P_5.0.8
Load regulation TLS205B0EJV	ΔV_Q	–	–	14	mV	3) V_I = 2.3 V; ΔI_Q = 1 to 500 mA	P_5.0.9
Dropout voltage							
Dropout voltage	V_{DR}	–	130	190	mV	2) 5) 6) I_Q = 10 mA; $V_I = V_{Q,nom}$; T_j = 25°C	P_5.0.10
Dropout voltage	V_{DR}	–	–	250	mV	2) 5) 6) I_Q = 10 mA; $V_I = V_{Q,nom}$	P_5.0.11
Dropout voltage	V_{DR}	–	170	220	mV	2) 5) 6) I_Q = 50 mA; $V_I = V_{Q,nom}$; T_j = 25°C	P_5.0.12
Dropout voltage	V_{DR}	–	–	320	mV	2) 5) 6) I_Q = 50 mA; $V_I = V_{Q,nom}$	P_5.0.13

(table continues...)

Table 5 (continued) Electrical characteristics

-40°C < T_j < 125°C; all voltages with respect to ground; positive current defined flowing out of pin; unless otherwise specified.

Parameter	Symbol	Values			Unit	Note or Test Condition	Number
		Min.	Typ.	Max.			
Dropout voltage	V_{DR}	–	200	240	mV	2) 5) 6) I_Q = 100 mA; V_I = $V_{Q,nom}$; T_j = 25°C	P_5.0.14
Dropout voltage	V_{DR}	–	–	340	mV	2) 5) 6) I_Q = 100 mA; V_I = $V_{Q,nom}$	P_5.0.15
Dropout voltage	V_{DR}	–	320	350	mV	2) 5) 6) I_Q = 500 mA; V_I = $V_{Q,nom}$; T_j = 25°C	P_5.0.16
Dropout voltage	V_{DR}	–	–	450	mV	2) 5) 6) I_Q = 500 mA; V_I = $V_{Q,nom}$	P_5.0.17
Quiescent current							
Quiescent current (active-mode, EN pin high)	I_q	–	30	60	µA	5) 7) V_I = $V_{Q,nom}$; I_Q = 0 mA	P_5.0.18
Quiescent current (off-mode, EN pin low)	I_q	–	0.1	1	µA	V_I = 6 V; V_{EN} = 0 V; T_j = 25°C	P_5.0.19
GND pin current							
GND pin current	I_{GND}	–	50	100	µA	5) 7) V_I = $V_{Q,nom}$; I_Q = 1 mA	P_5.0.20
GND pin current	I_{GND}	–	300	850	µA	5) 7) V_I = $V_{Q,nom}$; I_Q = 50 mA	P_5.0.21
GND pin current	I_{GND}	–	0.7	2.2	mA	5) 7) V_I = $V_{Q,nom}$; I_Q = 100 mA	P_5.0.22
GND pin current	I_{GND}	–	3	8	mA	5) 7) V_I = $V_{Q,nom}$; I_Q = 250 mA	P_5.0.23
GND pin current	I_{GND}	–	11	22	mA	5) 7) V_I = $V_{Q,nom}$; I_Q = 500 mA; T_j ≥ 25°C	P_5.0.24
GND pin current	I_{GND}	–	11	31	mA	5) 7) V_I = $V_{Q,nom}$; I_Q = 500 mA; T_j < 25°C	P_5.0.25
Enable							
Enable threshold high	$V_{th,EN}$	–	0.8	2.0	V	V_Q from off to on	P_5.0.26
Enable threshold low	$V_{tl,EN}$	0.25	0.65	–	V	V_Q from on to off	P_5.0.27
EN pin current	I_{EN}	–	0.01	–	µA	8) V_{EN} = 0 V; T_j = 25°C	P_5.0.28
EN pin current	I_{EN}	–	1	–	µA	8) V_{EN} = 20 V; T_j = 25°C	P_5.0.29

(table continues...)

Table 5 (continued) Electrical characteristics

-40°C < T_j < 125°C; all voltages with respect to ground; positive current defined flowing out of pin; unless otherwise specified.

Parameter	Symbol	Values			Unit	Note or Test Condition	Number
		Min.	Typ.	Max.			
Adjust pin bias current							
ADJ pin bias current	$I_{bias,ADJ}$	–	60	–	nA	[9) 10)] T_j = 25°C	P_5.0.30
Output voltage noise							
Output voltage noise TLS205B0EJV	e_{no}	–	41	–	μV_{RMS}	[10) 11)] C_Q = 10 µF; C_{BYP} = 10 nF; I_Q = 500 mA; BW = 10 Hz to 100 kHz	P_5.0.31
Output voltage noise TLS205B0EJV	e_{no}	–	28	–	μV_{RMS}	[10) 11)] C_Q = 10 µF +250 mΩ resistor in series; C_{BYP} = 10 nF; I_Q = 500 mA; BW = 10 Hz to 100 kHz	P_5.0.32
Output voltage noise TLS205B0EJV	e_{no}	–	29	–	μV_{RMS}	[10) 11)] C_Q = 22 µF C_{BYP} = 10 nF; I_Q = 500 mA; BW = 10 Hz to 100 kHz	P_5.0.33
Output voltage noise TLS205B0EJV	e_{no}	–	24	–	μV_{RMS}	[10) 11)] C_Q = 22 µF +250 mΩ resistor in series; C_{BYP} = 10 nF; I_Q = 500 mA; BW = 10 Hz to 100 kHz	P_5.0.34
Output voltage noise TLS205B0EJ V33	e_{no}	–	45	–	μV_{RMS}	[10)] C_Q = 10 µF; C_{BYP} = 10 nF; I_Q = 500 mA; BW = 10 Hz to 100 kHz	P_5.0.35
Output voltage noise TLS205B0EJ V33	e_{no}	–	35	–	μV_{RMS}	[10)] C_Q = 10 µF +250 mΩ resistor in series; C_{BYP} = 10 nF; I_Q = 500 mA; BW = 10 Hz to 100 kHz	P_5.0.36
Output voltage noise TLS205B0EJ V33	e_{no}	–	33	–	μV_{RMS}	[10)] C_Q = 22 µF C_{BYP} = 10 nF; I_Q = 500 mA; BW = 10 Hz to 100 kHz	P_5.0.37
Output voltage noise TLS205B0EJ V33	e_{no}	–	30	–	μV_{RMS}	[10)] C_Q = 22 µF +250mΩ resistor in series; C_{BYP} = 10 nF; I_Q = 500 mA; BW = 10 Hz to 100 kHz	P_5.0.38
Power supply ripple rejection							

(table continues...)

Table 5 (continued) Electrical characteristics

-40°C < T_j < 125°C; all voltages with respect to ground; positive current defined flowing out of pin; unless otherwise specified.

Parameter	Symbol	Values			Unit	Note or Test Condition	Number
		Min.	Typ.	Max.			
Power supply ripple rejection	*PSRR*	–	65	–	dB	[10] V_I - V_Q = 1.5 V (avg); V_{RIPPLE} = 0.5 V_{pp}; f_r = 120 Hz; I_Q = 500 mA	P_5.0.39
Output current limitation							
Output current limit	$I_{Q,limit}$	520	–	–	mA	V_I = 7 V; V_Q = 0 V	P_5.0.40
Output current limit	$I_{Q,limit}$	520	–	–	mA	[12] V_I = $V_{Q,nom}$ + 1 V or 2.3 V; ΔV_Q = -0.1 V	P_5.0.41
Input reverse leakage current							
Input reverse leakage	$I_{leak,rev}$	–	–	1	mA	V_I = -20 V; V_Q = 0 V	P_5.0.42
Reverse output current							
Reverse output current TLS205B0EJ V33	$I_{Reverse}$	–	10	20	µA	[13] V_Q = $V_{Q,nom}$; V_I < $V_{Q,nom}$; T_j = 25°C	P_5.0.43
Reverse output current TLS205B0EJV	$I_{Reverse}$	–	5	10	µA	[3] [13] V_Q = 1.22 V; V_I < 1.22 V; T_j = 25°C	P_5.0.44

1) This parameter defines the minimum input voltage for which the device is powered up and provides the maximum nominal output current of 500 mA. The output voltage of the adjustable version in this condition depends on the chosen setting of the external voltage divider as well as on the applied conditions – thus the device is either regulating its nominal output voltage or is in tracking mode. The 3.3 V fixed voltage version is by definition in tracking mode for such low input voltages.
2) For the adjustable version of the TLS205B0EJ the dropout voltage for certain output voltage and load conditions is restricted by the minimum input voltage specification.
3) The adjustable version of the TLS205B0EJ is tested/specified for these conditions with the ADJ pin connected to the Q pin.
4) The operating conditions are limited by the maximum junction temperature. The regulated output voltage specification will only applies only in conditions where the maximum junction temperature is not exceeded. It does therefore not apply for all possible combinations of input voltage and output current at a given output voltage. When operating at maximum input voltage, the output current must be limited for thermal reasons. The same holds true when operating at maximum output current where the input voltage range must be limited for thermal reasons.
5) To satisfy requirements for minimum input voltage, the TLS205B0EJ adjustable version is tested and specified for these conditions with an external resistor divider (two 250 kΩ resistors) for an output voltage of 2.44 V. The external resistors add a 5 µA DC load on the output.
6) The dropout voltage is the minimum input-to-output voltage differential needed to maintain regulation at a specified output current. In dropout, the output voltage is equal to V_I - V_{DR}
7) GND pin current is tested with V_I = $V_{Q,nom}$ and a current source load. This means that this parameter is tested while being in the dropout region. The GND pin current will in most cases decrease slightly at higher input voltages. For details, refer to the corresponding typical performance graphs.
8) The EN pin current flows into the EN pin.
9) The ADJ pin current flows into the ADJ pin.
10) Not subject to production test, specified by design.
11) ADJ pin connected to output pin Q.
12) Whichever of the two values of V_I is greater in order to also satisfy the requirements for $V_{I,min}$.
13) The reverse output current is tested with the I pin grounded and the Q pin forced to the rated output voltage. This current flows into the Q pin and out of the GND pin.

***Note**: The listed characteristics are ensured over the operating range of the integrated circuit. Typical characteristics specify mean expected over the production spread. If not otherwise specified, typical characteristics apply at T_A = 25°C and the given supply voltage.*

4.1 Typical performance characteristics

Dropout voltage V_{DR} versus output current I_Q

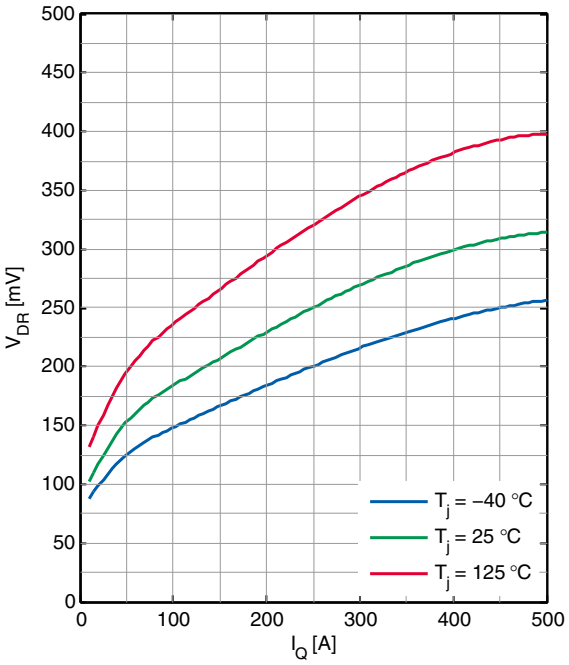

Specified dropout voltage V_{DR} versus output current I_Q

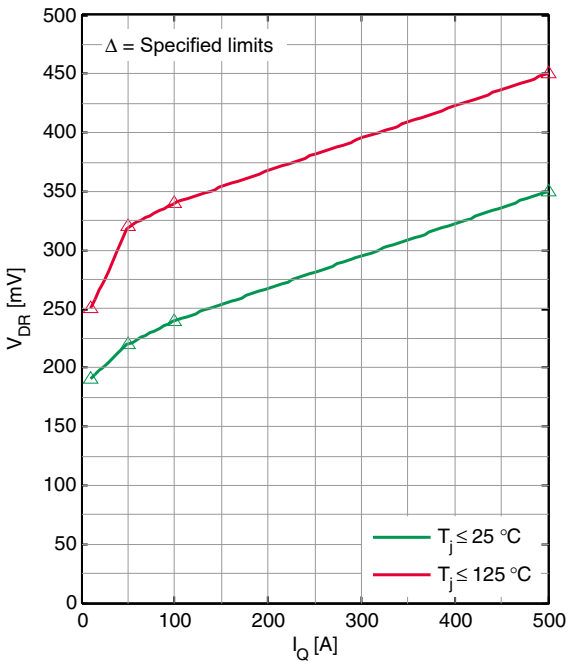

Dropout voltage V_{DR} versus junction temperature T_j

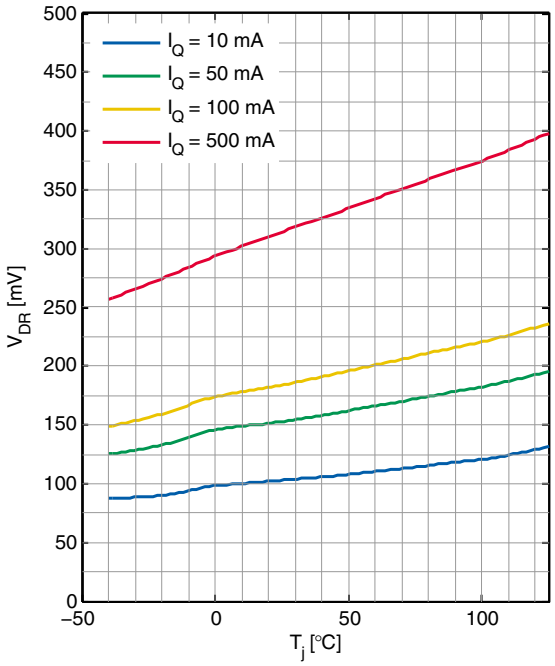

Quiescent current I_q versus junction temperature T_j

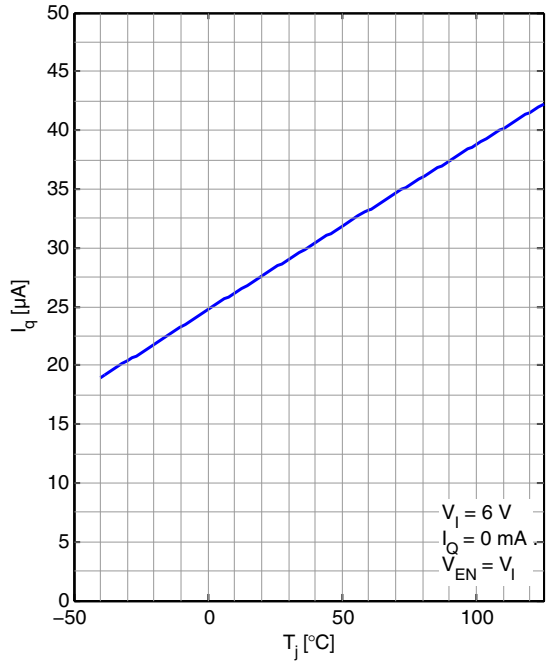

Output voltage V_Q versus
junction temperature T_j (TLS205B0EJ V33)

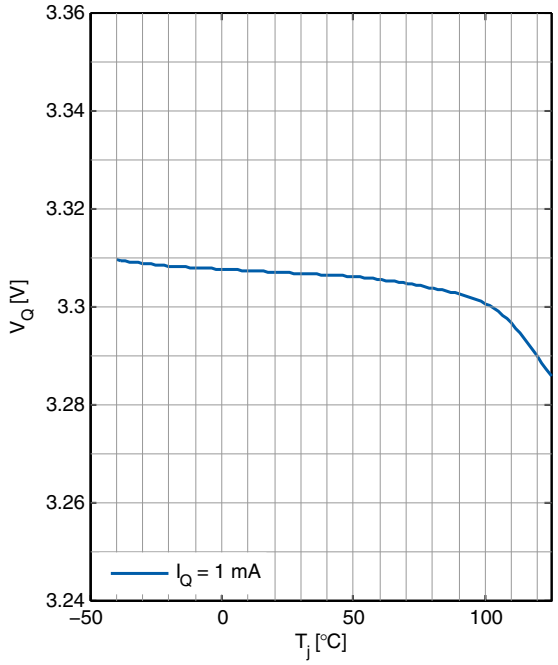

Output voltage V_Q versus
junction temperature T_j (TLS205B0EJV)

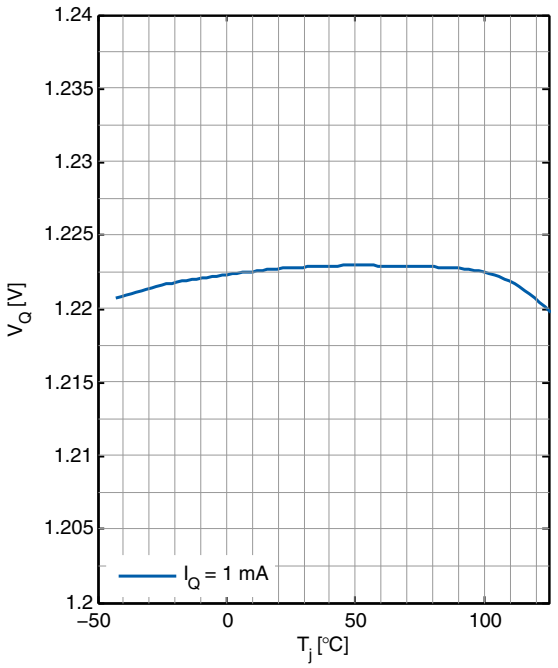

Quiescent current I_q versus
input voltage V_I (TLS205B0EJ V33)

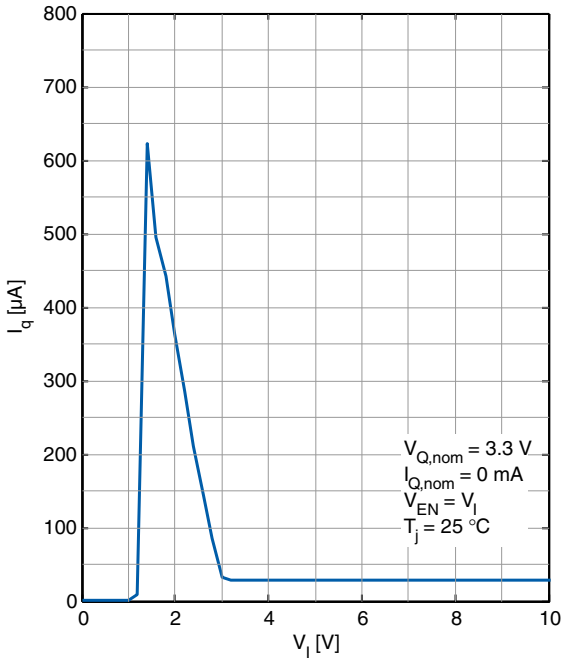

Quiescent current I_q versus
input voltage V_I (TLS205B0EJV)

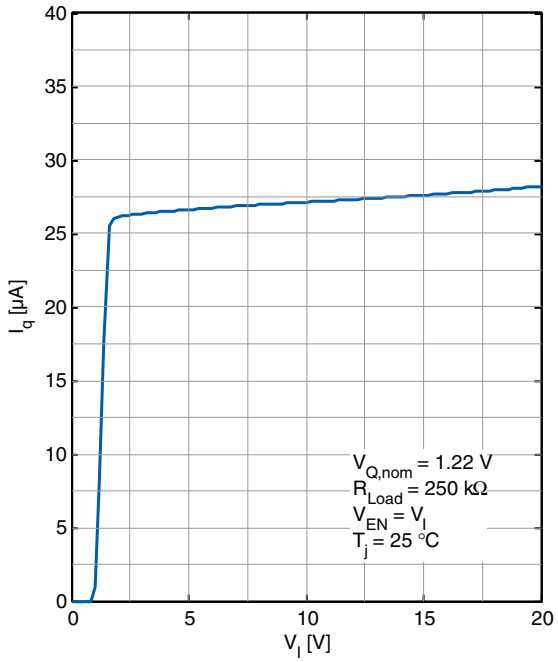

GND pin current I_{GND} versus
input voltage V_I (TLS205B0EJ V33)

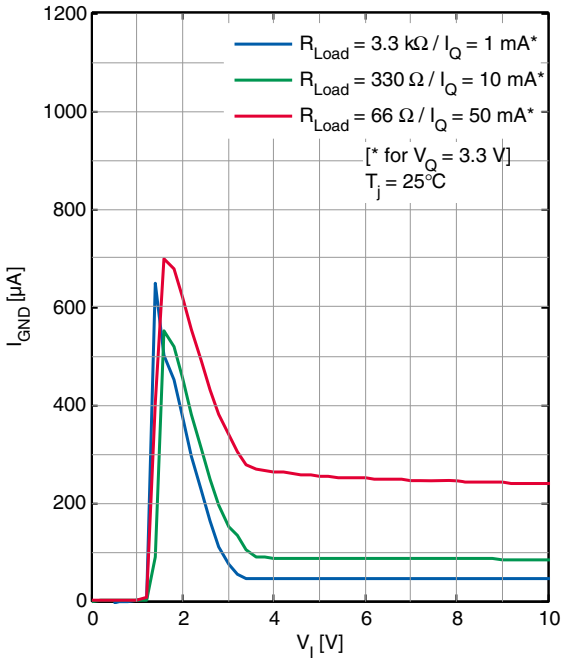

GND pin current I_{GND} versus
input voltage V_I (TLS205B0EJV)

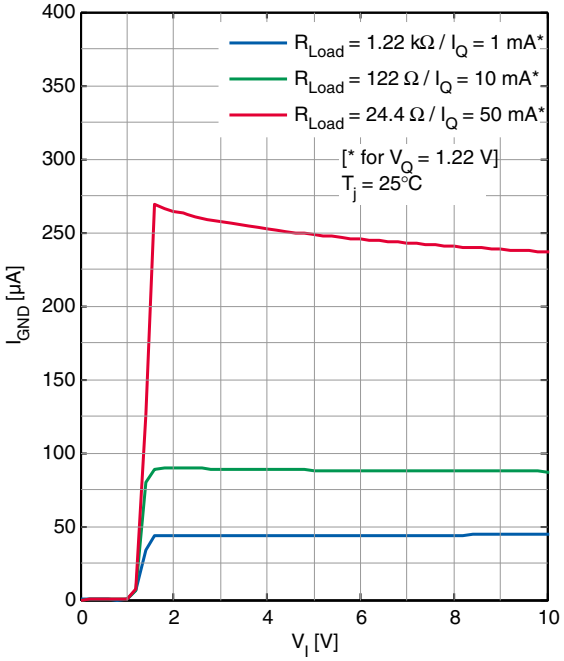

GND pin current I_{GND} versus
input voltage V_I (TLS205B0EJ V33)

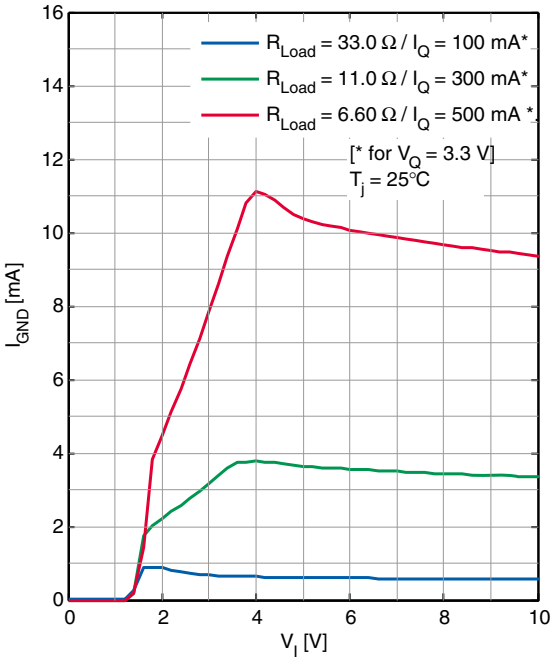

GND pin current I_{GND} versus
input voltage V_I (TLS205B0EJV)

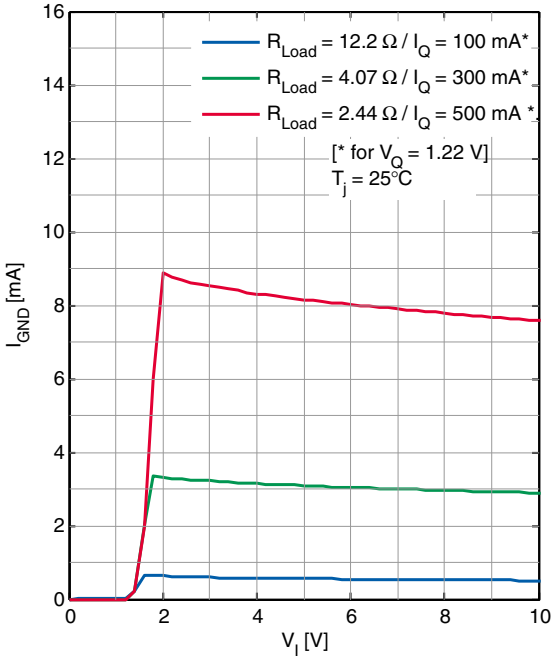

GND pin current I_{GND} versus
output current I_Q

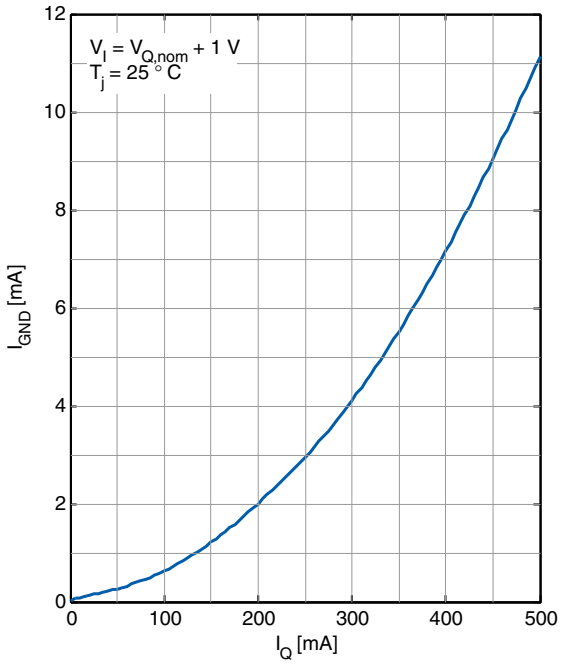

EN pin threshold $V_{tl,EN}$ (on to off) versus
junction temperature T_j

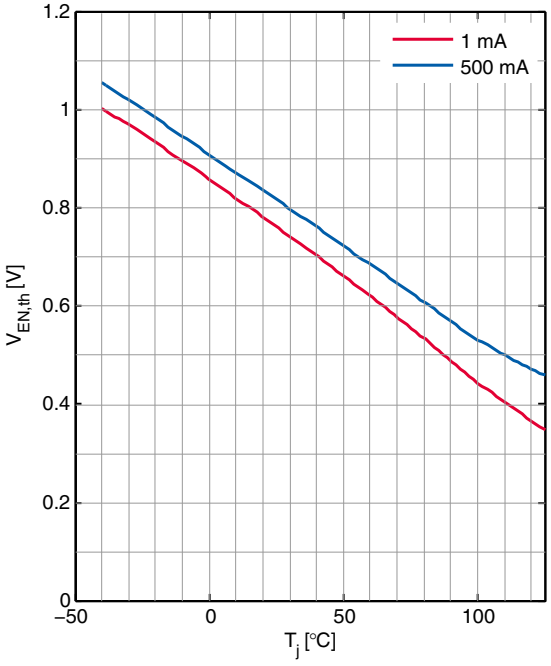

EN pin threshold $V_{th,EN}$ (off to on) versus
junction temperature T_j

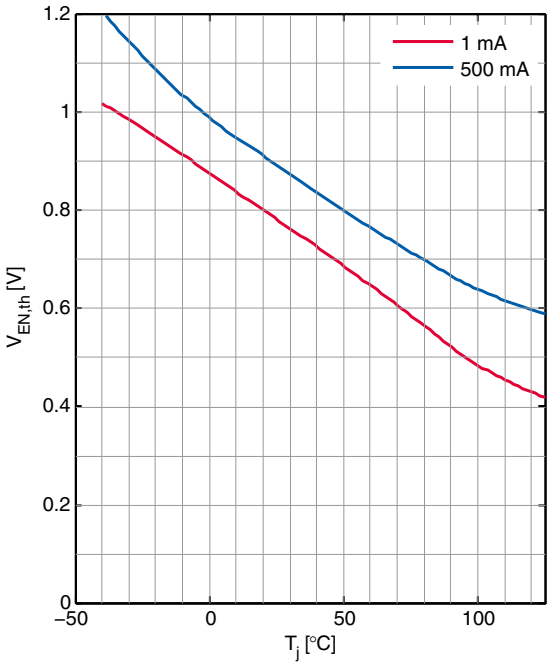

EN pin input current I_{EN} versus
EN pin voltage V_{EN}

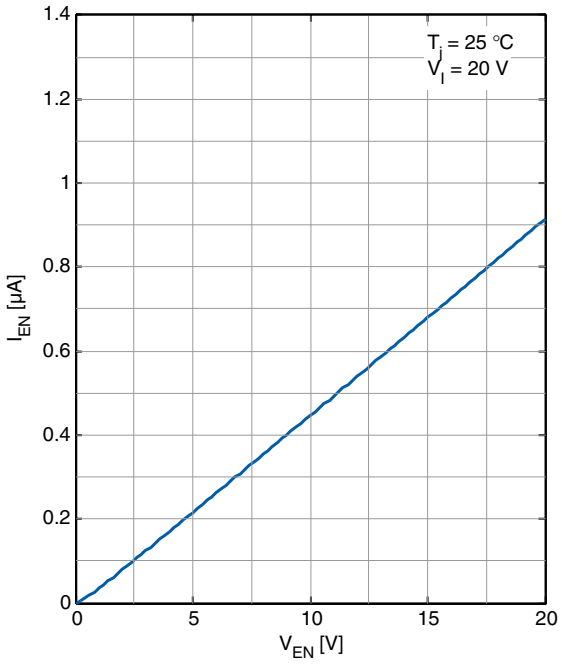

EN pin current I_{EN} versus junction temperature T_j

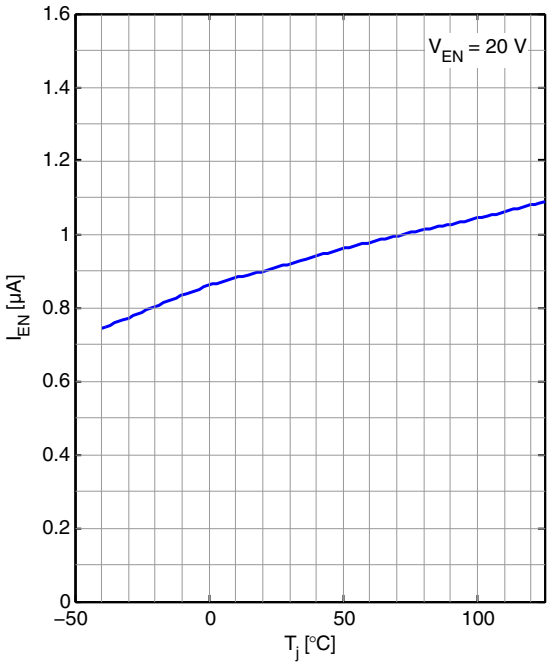

Current limit $I_{Q,limit}$ versus input voltage V_I

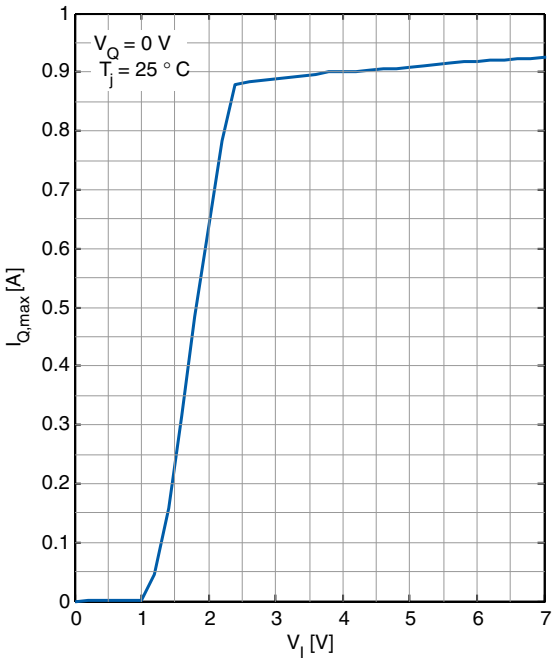

Current limit $I_{Q,limit}$ versus junction temperature T_j

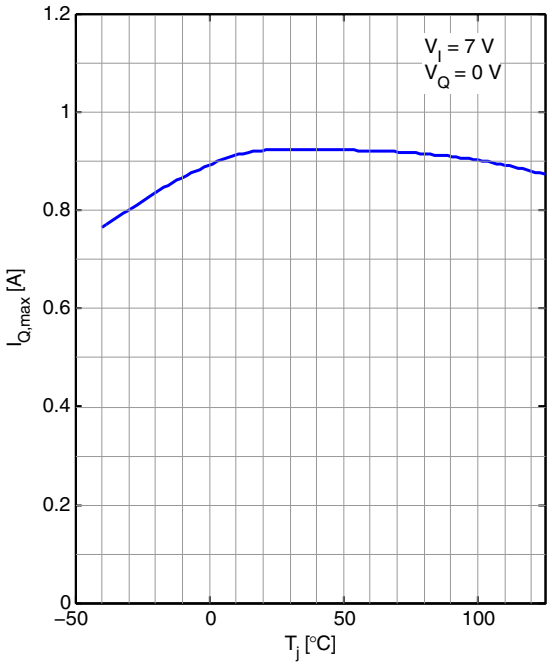

Reverse output current $I_{Reverse}$ versus output voltage V_Q

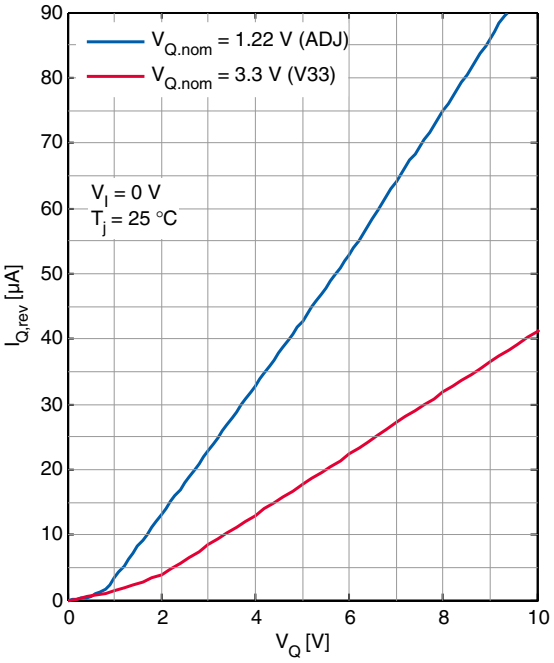

Reverse output current $I_{Reverse}$ versus junction temperature T_j

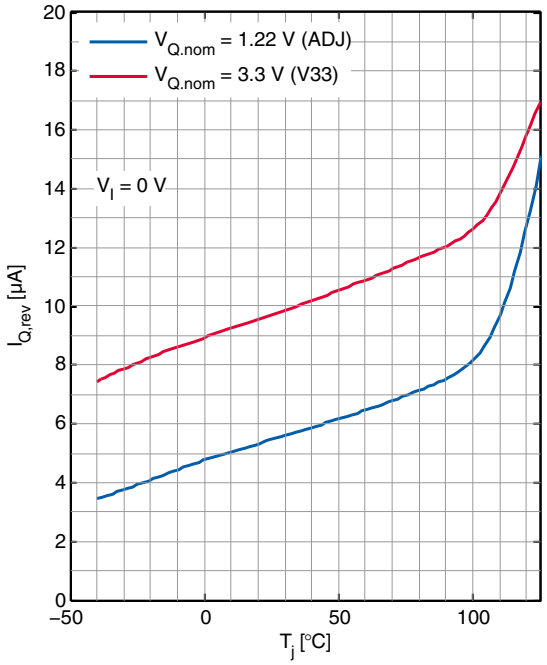

Minimum input voltage [1] $V_{I,min}$ versus junction temperature T_j

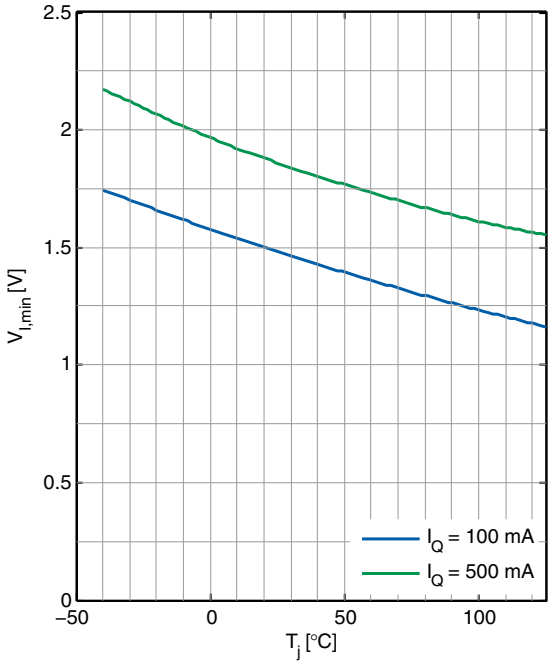

Load regulation ΔV_Q versus junction temperature T_j

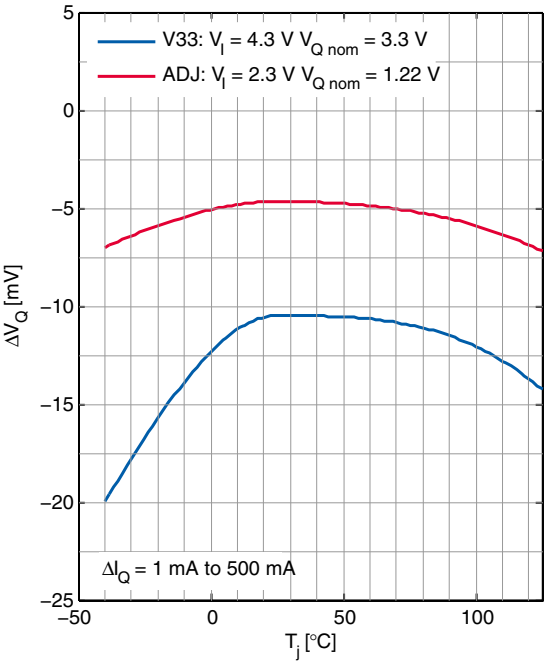

Adjust pin bias current $I_{bias,ADJ}$ versus junction temperature T_j

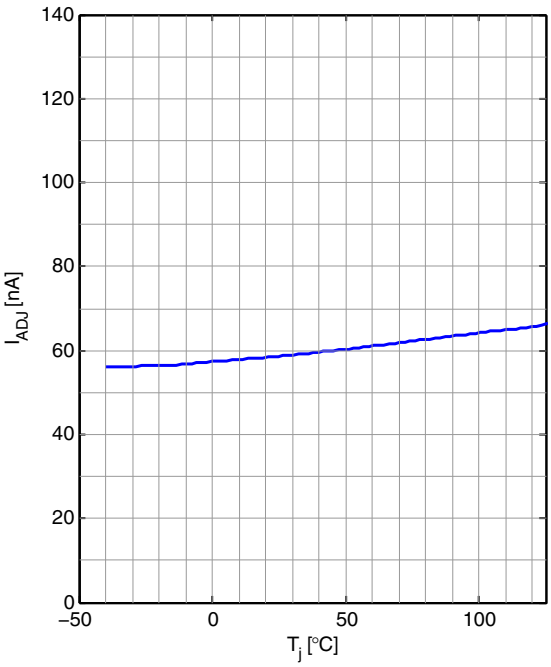

1) $V_{I,min}$ is referred here as the minimum input voltage for which the requested current is provided and V_Q reaches 1 V.

ESR stability versus
output current I_Q (for C_Q = 3.3 µF)

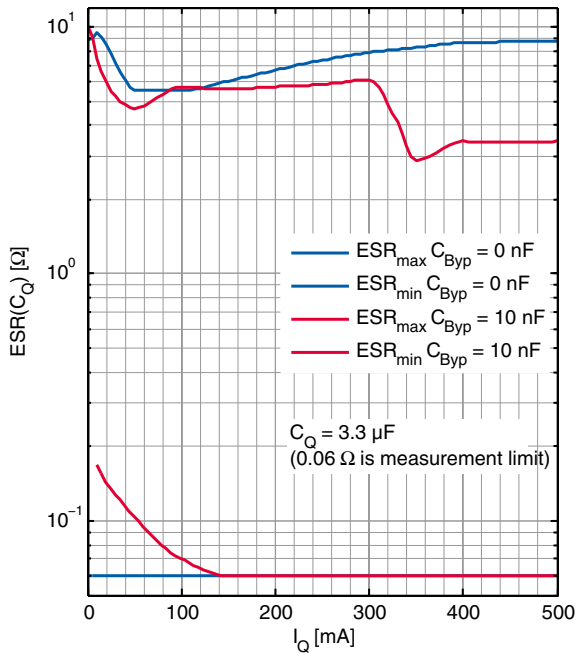

ESR(C_Q) with C_{BYP} = 10 nF versus
output capacitance C_Q

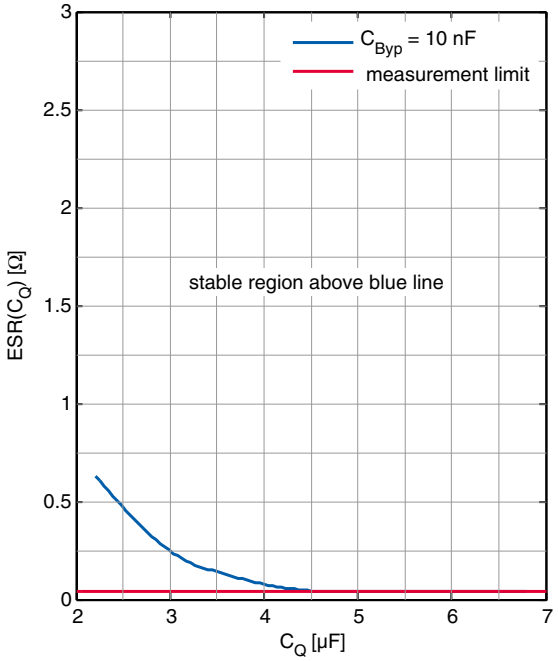

Power supply ripple rejection PSRR versus
frequency *f*

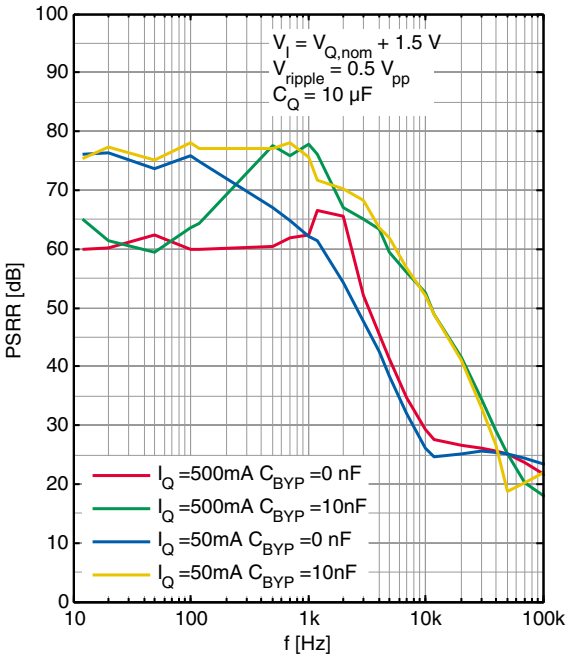

Power supply ripple rejection PSRR versus
junction temperature T_j

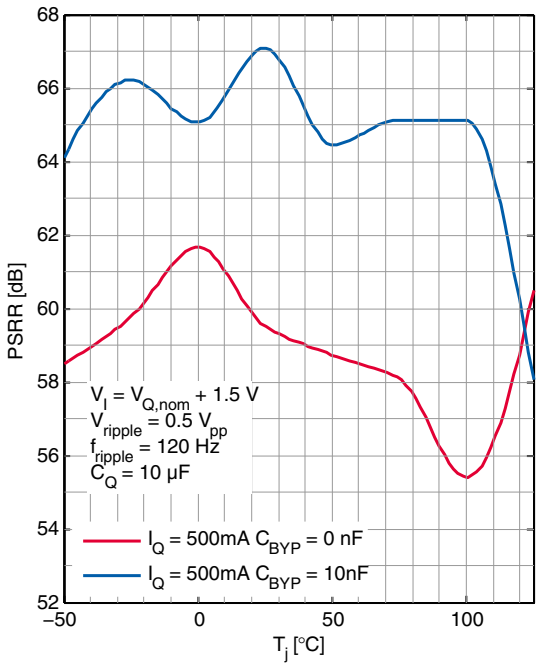

Output noise spectral density TLS205B0EJV versus frequency f (C_Q = 10 µF, I_Q = 50 mA)

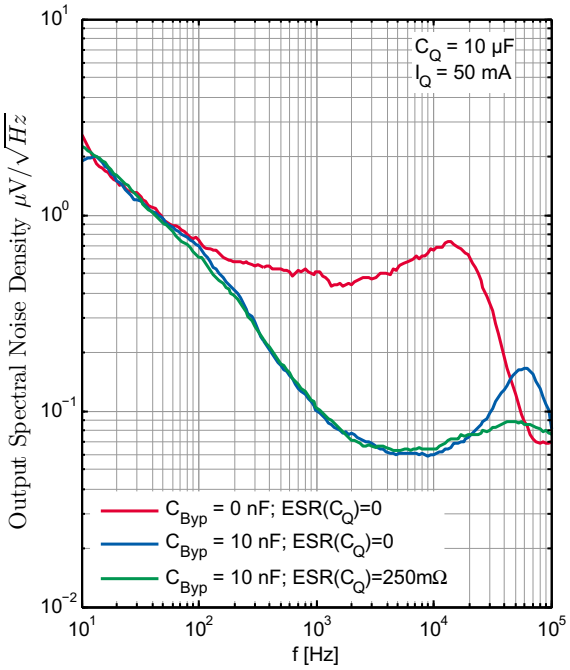

Output noise spectral density TLS205B0EJV versus frequency f (C_Q = 22 µF, I_Q = 50 mA)

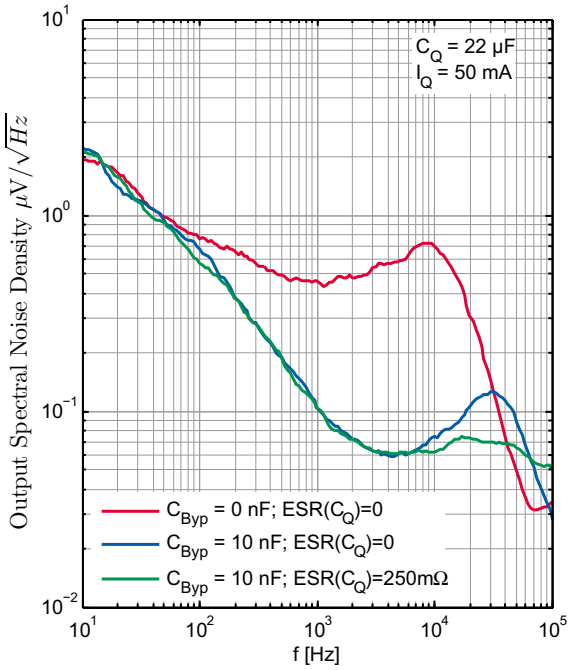

Output noise spectral density TLS205B0EJ V33 versus frequency f (C_Q = 10 µF, I_Q = 50 mA)

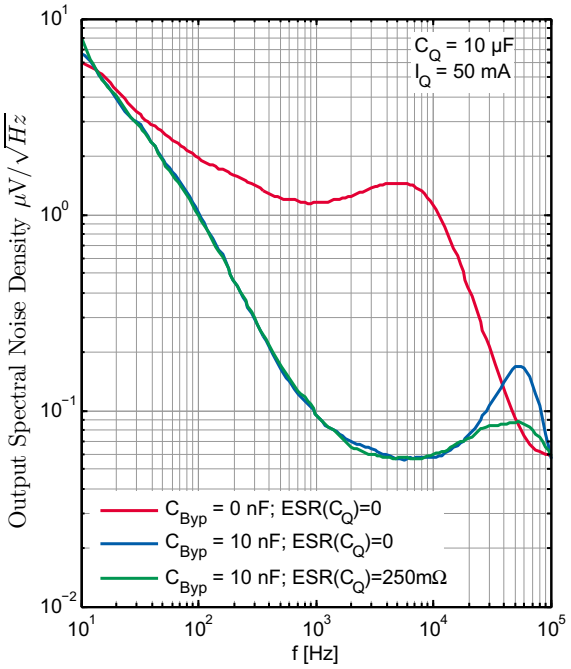

Output noise spectral density TLS205B0EJ V33 versus frequency f (C_Q = 22 µF, I_Q = 50 mA)

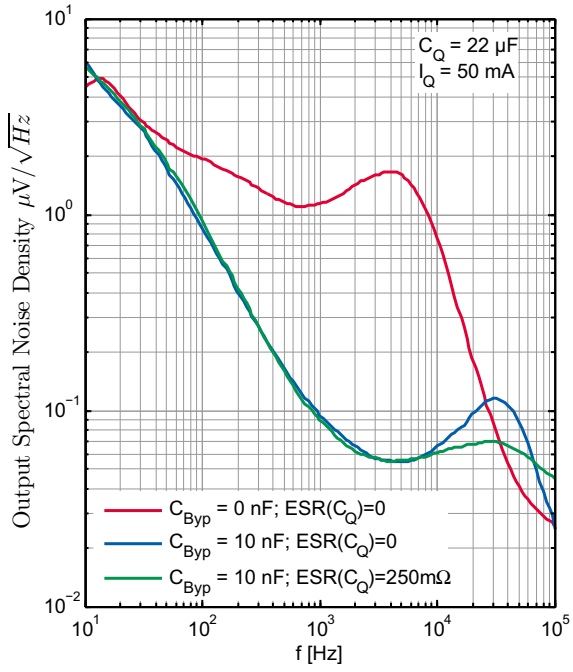

Transient response C_{BYP} = 0 nF (TLS205B0EJ V33)

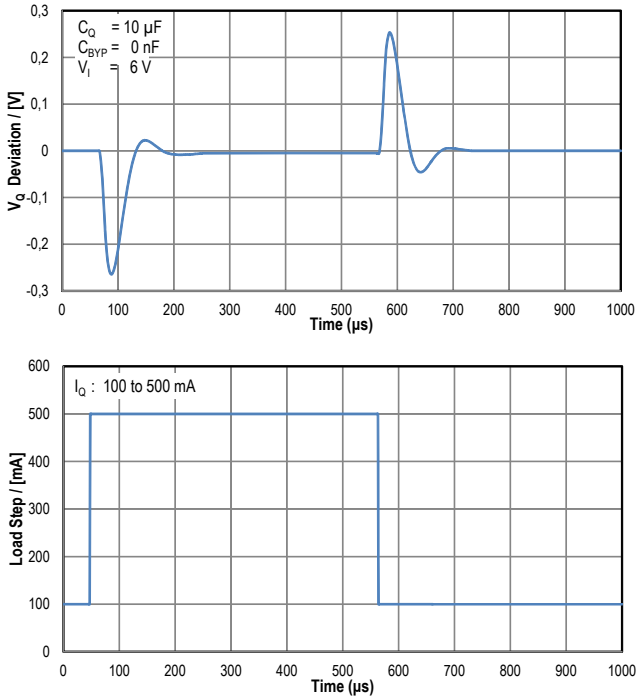

Transient response C_{BYP} = 10 nF (TLS205B0EJ V33)

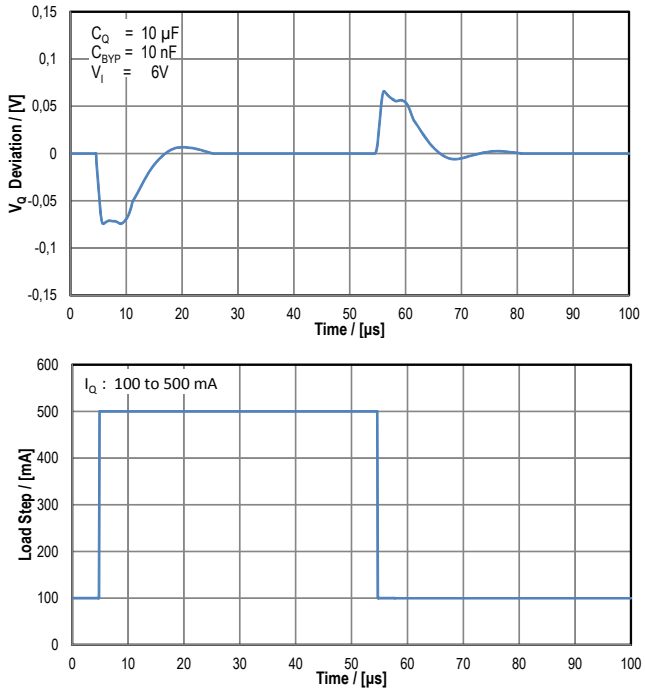

5 Application information

***Note**: The following information is given as a hint for the implementation of the device only and shall not be regarded as a description or warranty of a certain functionality, condition or quality of the device.*

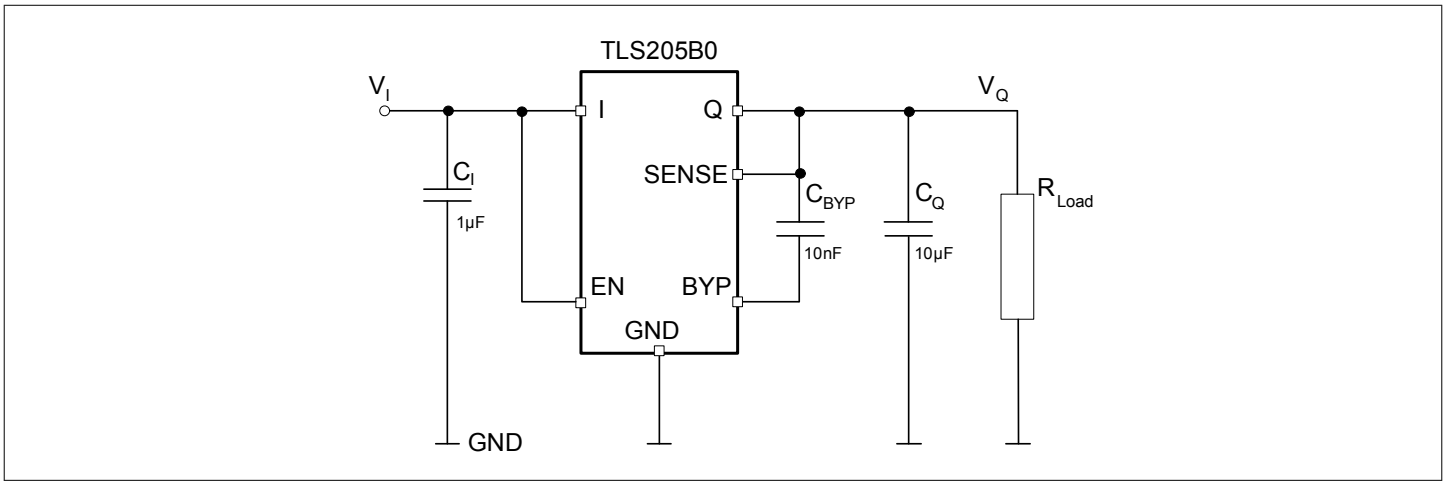

Figure 4 Typical application circuit TLS205B0EJ V33

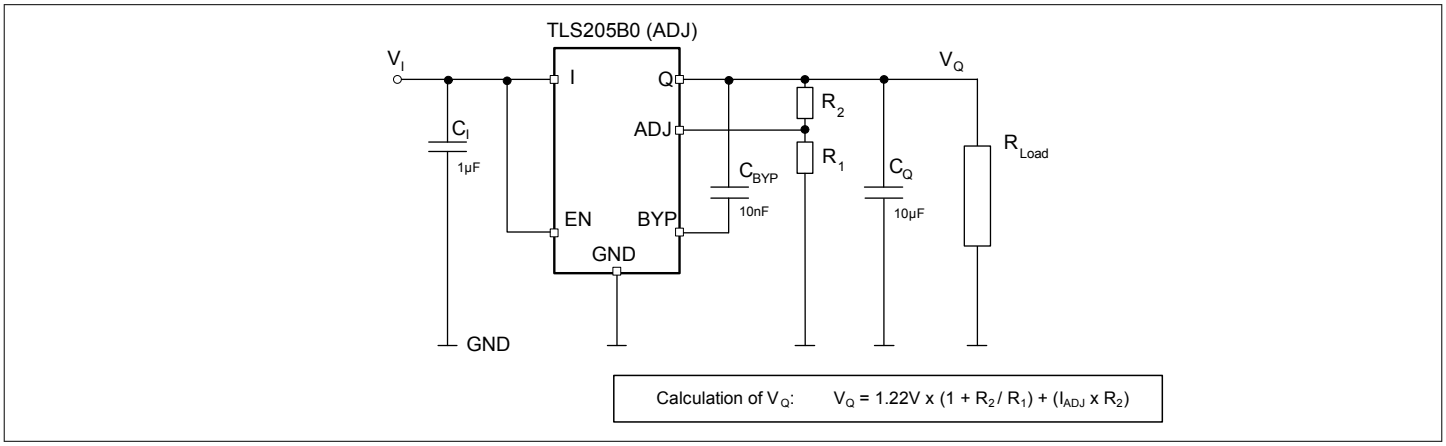

Figure 5 Typical application circuit TLS205B0EJV

***Note**: This is a very simplified example of an application circuit. The functionality must be verified in the real application.[1) 2)]*

The TLS205B0EJ is a 500 mA low-dropout regulator with very low quiescent current and Enable-functionality. The device is capable of supplying 500 mA at a dropout voltage of 320 mV. Output voltages down to 24 μV_{RMS} can be achieved over a bandwidth from 10 Hz to 100 kHz with the addition of a 10 nF reference bypass capacitor. Using a reference bypass capacitor additionally improves the transient response of the regulator, lowering the settling time for transient load conditions. The device has a low operating quiescent current of typically 30 µA that drops to less than 1 µA in shutdown (EN pulled low). The device also incorporates several protection features which makes it ideal for battery-powered systems. It is protected against both reverse input and reverse output voltages.

1 Note that when a non-negligible inductance is present at the input pin I, for example, due to long cables, traces, parasitics, etc, a bigger input capacitor C_I may be required to filter its influence. As a rule of thumb: If the I pin is more than 15 centimeter away from the main input filter capacitor, an input capacitor value of C_I = 10 µF is recommended.

2 For specific needs, a small optional resistor may be placed in series to very low ESR output capacitors C_Q for enhanced noise performance. (For details see Bypass capacitance and low noise performance.)

5.1 Adjustable operation

The adjustable version, TLS205B0EJV has an output voltage range of 1.22 V to 20 V - V_{DR}. The output voltage is set by the ratio of two external resistors, as shown in Figure 5. The device controls the output to maintain the ADJ pin at 1.22 V referenced to ground. The current in R1 is then equal to 1.22 V/R1 and the current in R2 equals the current in R1 plus the ADJ pin bias current. The ADJ pin bias current, which is ~60 nA @ 25°C, flows through R2 into the ADJ pin. The value of R1 should not be greater than 250 kΩ in order to minimize errors in the output voltage caused by the ADJ pin bias current. Note that when the device is shut down (that is, low level applied to EN pin), the output is turned off and consequently the divider current is zero. For details of the ADJ pin bias current see also the corresponding typical performance graph, Adjust pin bias current $I_{bias,ADJ}$ versus junction temperature T_j.

5.2 Kelvin sense connection

For the fixed voltage version, TLS205B0EJ V33 the SENSE pin is the input to the error amplifier. Optimal regulation is obtained at the point where the SENSE pin is connected to the output pin Q of the regulator. In critical applications, however, small voltage drops may be caused by the resistance R_p of the PC traces and may lower the resulting voltage at the load. This effect may be eliminated by connecting the SENSE pin to the output as close as possible to the load (see Figure 6). Note that the voltage drop across the external PC trace will add to the dropout voltage of the regulator.

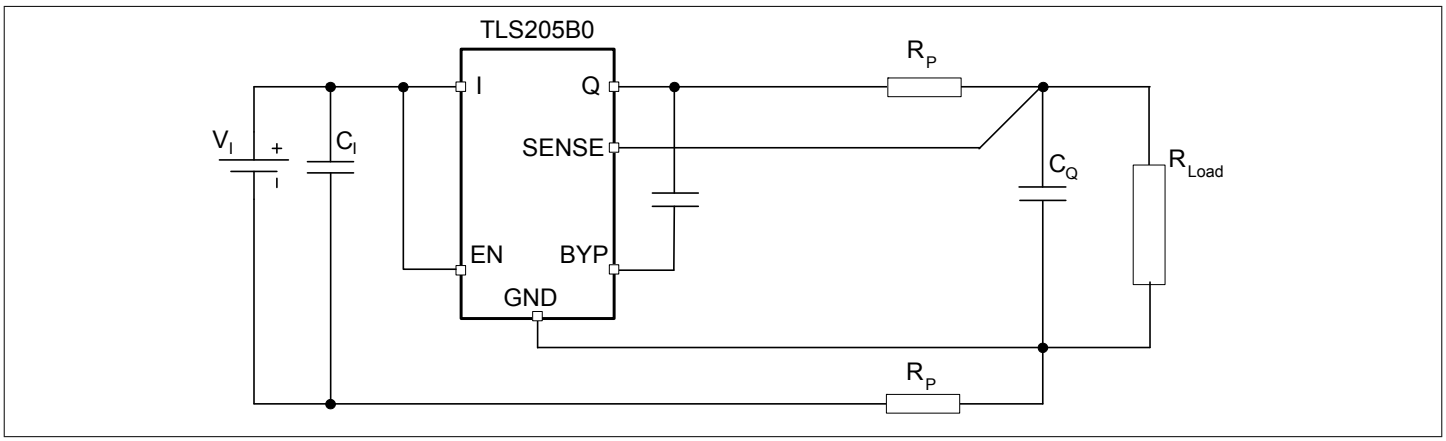

Figure 6 Kelvin sense connection

5.3 Bypass capacitance and low noise performance

The TLS205B0EJ regulator can be used in combination with a bypass capacitor connecting the output pin Q to the BYP pin in order to minimize output voltage noise[3]. This capacitor bypasses the reference of the regulator, providing a low-frequency noise pole. The noise pole provided by such a bypass capacitor will lower the output voltage noise in the considered bandwidth. For a given output voltage, actual numbers of the output voltage noise of the

TLS205B0EJ will - next to the bypass capacitor itself - be dependent on the capacitance of the applied output capacitor C_Q and its ESR.

In the case of the adjustable, TLS205B0EJV, used in a unity gain configuration with V_Q = 1.22 V, using a bypass capacitor of 10 nF in combination with a (low-ESR) ceramic C_Q of 10 µF results in an output voltage noise number of typically 41 μV_{RMS}. This output noise level can be reduced to typically 28 μV_{RMS} under the same conditions by adding a small resistor in the range of ~250 mΩ in series to the 10 µF ceramic output capacitor, thus acting as additional ESR. A reduction of the output voltage noise can also be achieved by increasing the capacitance of the output capacitor. For C_Q = 22 µF (ceramic low-ESR), the output voltage noise will typically be around 29 μV_{RMS} and can again be further lowered to 24 μV_{RMS} by adding a small resistance of ~ 250 mΩ in series to C_Q.

For the fixed voltage version TLS205B0EJ V33 the output voltage noise numbers for the cases described above vary from 45 μV_{RMS} down to 30 μV_{RMS}.

[3] A good -quality low-leakage capacitor is recommended.

For further details see Output voltage noise in electrical characteristics. Note that next to reducing the output voltage noise level, the usage of a bypass capacitor has the additional benefit of improving transient response, further explained in Chapter 5.4. However, one needs to take into consideration that the regulator start-up time is proportional to the size of the bypass capacitor and slows down to values around 15 ms when using a 10 nF bypass capacitor in combination with a 10 µF output capacitor C_Q.

5.4 Output capacitance and transient response

The TLS205B0EJ is designed to be stable with a wide range of output capacitors. The ESR of the output capacitor is an essential parameter with regard to stability, most notably with small capacitors. A minimum output capacitor of 3.3 µF with an ESR of 3 Ω or less is recommended to prevent oscillations. As is typical for LDOs, the output transient response of the TLS205B0EJ is a function of the output capacitance. Larger output capacitances decrease peak deviations and thus improve transient response for larger load current changes. Bypass capacitors, used to decouple individual components powered by the TLS205B0EJ, increase the effective output capacitor value. Note that, when using bypass capacitors for low-noise operation, either larger values of output capacitors may be needed or a minimum ESR requirement of C_Q may have to be considered, shown by the graph, ESR(C_Q) with C_{BYP} = 10 nF versus output capacitance C_Q as an example.

In conjunction with a 10 nF bypass capacitor, an output capacitor C_Q of at least 6.8 µF is recommended. The benefit of a bypass capacitor C_{BYP} to the transient response performance is impressive and illustrated as an example in Figure 7. The transient response of the TLS205B0EJ V33 to the same load step from 100 mA to 500 mA is shown with and without a 10 nF bypass capacitor C_{BYP} . For the given configuration of C_Q = 10 µF with no bypass capacitor, the load step settles in the range of less than 100 µs, while for C_Q = 10 µF in conjunction with a 10 nF bypass capacitor the same load step settles in the range of 10 µs. Due to the shorter reaction time of the regulator obtained by adding the bypass capacitor, not only does the settling time improve but also output voltage deviations caused by load steps are sharply reduced.

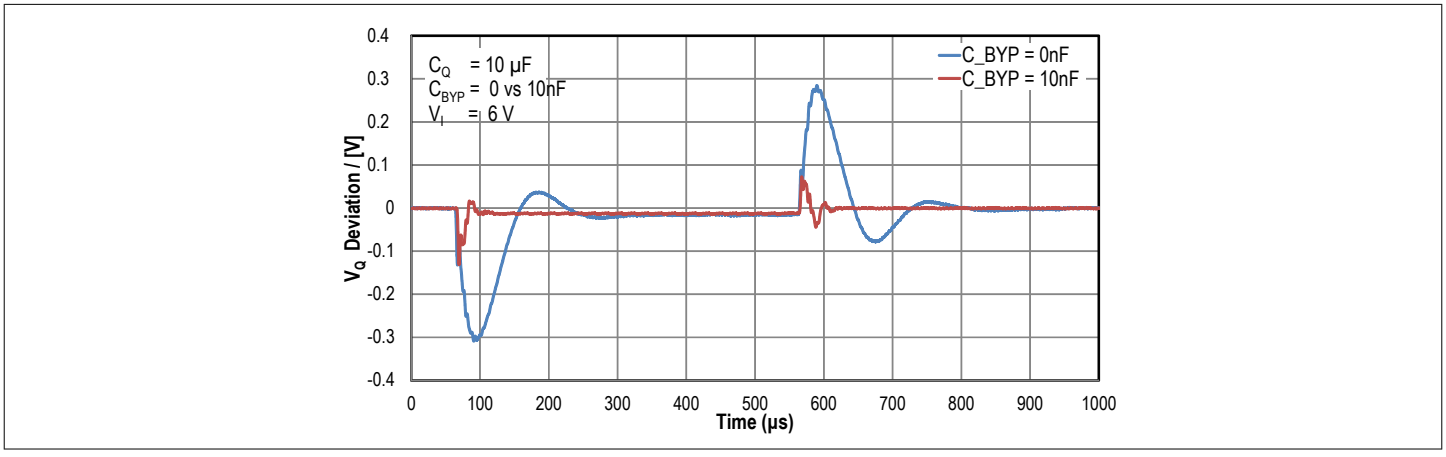

Figure 7 Influence of C_{BYP}: Example of transient response to the same load step with and without C_{BYP} of 10 nF (I_Q: 100 mA to 500 mA, TLS205B0EJ V33)

5.5 Protection features

The OPTIREG™ linear TLS205B0EJ regulator family incorporates several protection features which makes it ideal for use in battery-powered circuits. In addition to normal protection features associated with monolithic regulators like current-limiting and thermal-limiting, these devices are protected against reverse input voltage, reverse output voltage, and reverse voltages from output to input.

Current-limit protection and thermal overload protection are intended to protect the device against current overload conditions at the output of the device. For normal operation, the junction temperature must not exceed 125°C.

The input of the device withstands reverse voltages of 20 V. Current flowing into the device is limited to less than 1 mA (typically less than 100 µA) and no negative voltage appears at the output. The device protects both itself and the load. This provides protection against batteries being plugged backwards.

The output of the TLS205B0EJ can be pulled below ground without damaging the device. If the input is left open-circuit or grounded, the output can be pulled below ground by 20 V. Under such conditions, the output of the device by itself behaves like an open circuit with practically no current flowing out of the pin. [4)]

In more application-relevant cases, however, where the output is either connected to the SENSE pin (fix voltage variant) or tied either via an external voltage divider or directly to the ADJ pin (adjustable variant) a small current will be present from this origin. In the case of the fixed voltage version this current will typically be below 100 µA, whereas for the adjustable version it is dependent on the magnitude of the top resistor of the external voltage divider. [5)]

If the input is powered by a voltage source, the output sources the short-circuit current of the device and protects itself by thermal limiting. In this case grounding the EN pin will turn the device off and stop the output from sourcing the short-circuit current.

The ADJ pin of the adjustable device can be pulled above or below ground by as much as 7 V without damaging the device. If the input is grounded or left open-circuit, the ADJ pin will act inside this voltage range like a large resistor of typically 100 kΩ when being pulled above ground and like a resistor of typically 5 kΩ in series with a diode when being pulled below ground. In situations where the ADJ pin is at risk of being pulled outside its absolute maximum ratings ±7 V the ADJ pin current must be limited to 1 mA. This can happen if the ADJ pin is connected to a resistor divider that would pull the ADJ pin above its 7 V clamp voltage. Consider the case where a resistor divider is used to provide a 1.5 V output from the 1.22 V reference and the output is forced to 20 V. The top resistor of the resistor divider must then be chosen to limit the current into the ADJ pin to 1 mA or less when the ADJ pin is at 7 V. The 13 V difference between output and ADJ pin divided by the 1 mA maximum current into the ADJ pin requires a minimum resistor value of 13 kΩ.

In circuits where a backup battery is required, several different input and output conditions can occur. The output voltage may be held up while the input is either pulled to ground, pulled to some intermediate voltage or is left open-circuit. Current flow back into the output follows the curve as shown in Figure 8 below.

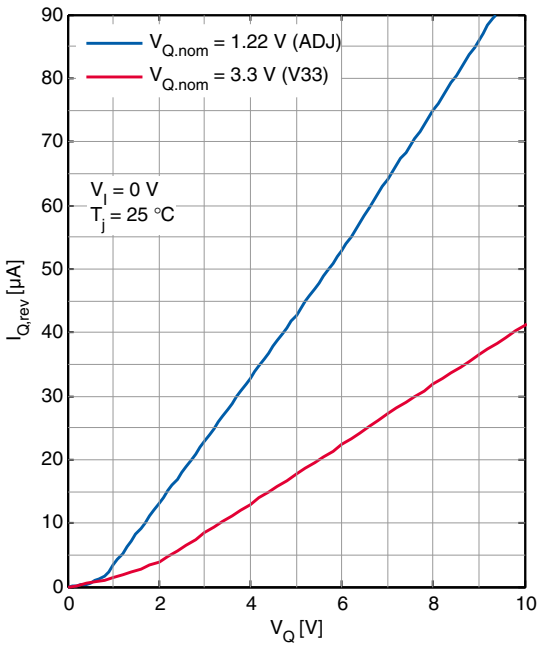

Figure 8 Reverse output current

4 Typically < 1 µA for the mentioned conditions, V_Q being pulled below ground with other pins either grounded or open.

5 In case there is no external voltage divider applied for example the ADJ pin is directly connected to the output Q and the output is pulled below ground by 20 V the current flowing out of the ADJ pin will be typically ~ 4 mA. Please ensure in such cases that the absolute maximum ratings of the ADJ pin are respected.

6 Package information

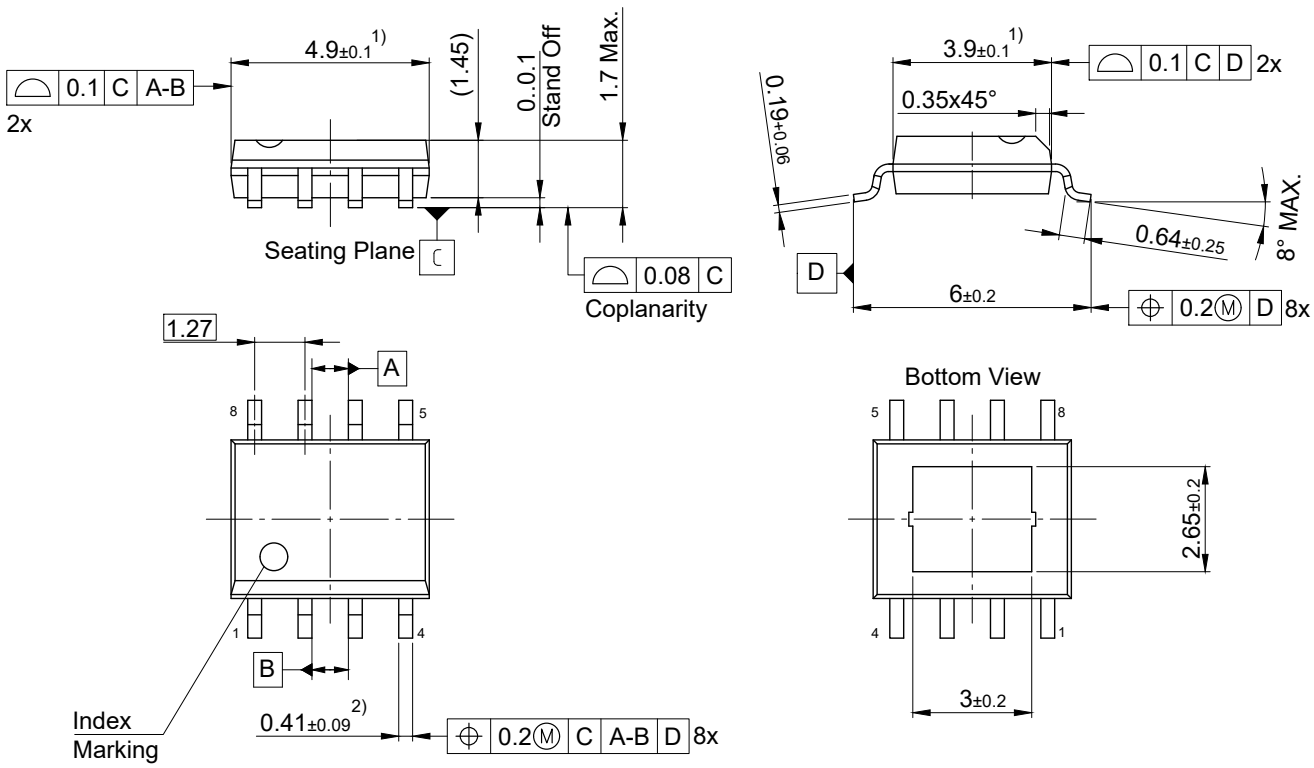

Figure 9 PG-DSO-8 exposed pad

Green Product (RoHS-compliant)

To meet the world-wide customer requirements for environmentally friendly products and to be compliant with government regulations the device is available as a Green Product. Green Products are RoHS-compliant (Pb-free finish on leads and suitable for Pb-free soldering according to IPC/JEDEC J-STD-020).

Further information on packages

https://www.infineon.com/packages

Revision history

Document version	Date of release	Description of changes
1.30	2025-02-13	PG-TSON-10 package variant removed. Editorial changes. Updated template and layout
1.20	2015-01-15	PG-TSON-10 package variants added: Product Overview, Pin Configuration, Thermal Resistance, etc - wording and description added or updated accordingly. Editorial changes.
1.10	2014-06-03	Order of footnotes in Table 3 “Thermal Resistance” corrected. Application Information Chapter 6.5 updated: Clarification and correction of wording. Typical values updated and footnotes added. Editorial changes.
1.00	2014-02-27	Datasheet - initial release

Trademarks

All referenced product or service names and trademarks are the property of their respective owners.

Edition 2025-02-13

Published by

Infineon Technologies AG

81726 Munich, Germany

© 2025 Infineon Technologies AG

All Rights Reserved.

Do you have a question about any aspect of this document?

Email: erratum@infineon.com

Document reference
IFX-mww1731058384267
Z8F53142154

Important notice

The information given in this document shall in no event be regarded as a guarantee of conditions or characteristics ("Beschaffenheitsgarantie").

With respect to any examples, hints or any typical values stated herein and/or any information regarding the application of the product, Infineon Technologies hereby disclaims any and all warranties and liabilities of any kind, including without limitation warranties of non-infringement of intellectual property rights of any third party.

In addition, any information given in this document is subject to customer's compliance with its obligations stated in this document and any applicable legal requirements, norms and standards concerning customer's products and any use of the product of Infineon Technologies in customer's applications.

The data contained in this document is exclusively intended for technically trained staff. It is the responsibility of customer's technical departments to evaluate the suitability of the product for the intended application and the completeness of the product information given in this document with respect to such application.

Warnings

Due to technical requirements products may contain dangerous substances. For information on the types in question please contact your nearest Infineon Technologies office.

Except as otherwise explicitly approved by Infineon Technologies in a written document signed by authorized representatives of Infineon Technologies, Infineon Technologies' products may not be used in any applications where a failure of the product or any consequences of the use thereof can reasonably be expected to result in personal injury.

ENTEGRECİ

Bu belge www.entegreci.com üzerinden sunulmaktadır.

Elektronik komponent tedarikinde Entegreci

Entegreci, Eskişehir merkezli, Türkiye geneline satış yapan bir elektronik komponent mağazasıdır. Entegreler (IC), mikrodenetleyiciler, transistörler, diyotlar, pasif elemanlar, konnektörler, modüller ve geliştirme kartları tek adetten seri üretim adetlerine kadar satılır. Ürün sayfalarında güncel stok durumunu, fiyatı ve datasheet bağlantısını bulabilirsiniz.

Parça koduyla arama

Üretici parça numarasını yazın; stok ve fiyatı hemen görün.

www.entegreci.com

Ürün kategorileri

Entegreden kapasitöre tüm elektronik komponent kategorileri.

Kategorilere göz atın

Üreticiler

Aradığınız üreticinin ürünlerini tek sayfada inceleyin.

Üreticileri görün

Toplu alım ve teklif

Listede olmayan ya da yüksek adetli parçalar için teklif isteyin.

Teklif isteyin

www.entegreci.com | **destek@entegreci.com** | **0850 305 90 34**

Entegreci is an online electronic components store based in Türkiye. Search by manufacturer part number to see stock, prices and datasheets for integrated circuits, microcontrollers, transistors, passive components and connectors, or request a quote for parts that are not listed.

Bu sayfa Entegreci tarafından eklenmiştir. Belgenin önceki sayfaları asıl yayıncısına aittir ve içeriği değiştirilmemiştir; en güncel sürüm için belgenin yayıncısına başvurun.