ISL9008A

Low Noise LDO with Low I_Q, High PSRR

FN6300
Rev 5.00
June 27, 2014

ISL9008A is a high performance single low noise, high PSRR LDO that delivers a continuous 150mA of load current. It has a low standby current and is stable with 1µF of MLCC output capacitance with an ESR of up to 200mΩ.

The ISL9008A has a high PSRR of 65dB and output noise less than 45µV_{RMS}. When coupled with a no load quiescent current of 46µA (typical), and 0.5µA shutdown current, the ISL9008A is an ideal choice for portable wireless equipment.

The ISL9008A comes in several fixed voltage options with ±1.8% output voltage accuracy over-temperature, line and load. Other output voltage options may be available upon request.

Pinouts

ISL9008A
(5 LD SC-70)
TOP VIEW

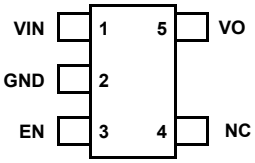

ISL9008A
(6 LD 1.6x1.6 µTDFN)
TOP VIEW

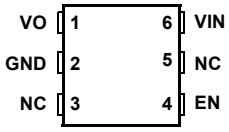

Features

- High performance LDO with 150mA continuous output
- Excellent transient response to large current steps
- Excellent load regulation:
  <0.1% voltage change across full range of load current
- High PSRR: 65dB at 1kHz
- Wide input voltage capability: 2.3V to 6.5V
- Very low quiescent current: 46µA
- Low dropout voltage: typically 200mV at 150mA
- Low output noise: typically 45µV_{RMS} at 100µA (1.5V)
- Stable with 1µF to 4.7µF ceramic capacitors
- Shutdown pin turns off LDO with 1µA (max) standby current
- Soft-start limits input current surge during enable
- Current limit and overheat protection
- ±1.8% accuracy over all operating conditions
- 5 Ld SC-70 package or 6 Ld µTDFN package
- -40°C to +85°C operating temperature range
- Pb-free (RoHS compliant)

Applications

- PDAs, cell phones and smart phones
- Portable instruments, MP3 players
- Handheld devices including medical handhelds

Ordering Information

PART NUMBER (Note 5, 6)	PART MARKING	V_O VOLTAGE (V) (Note 1)	TEMP. RANGE (°C)	PACKAGE (Pb-Free)	PKG. DWG. #
ISL9008AIENZ-T (Notes 2, 3)	CBV	3.3	-40 to +85	5 Ld SC-70	P5.049
ISL9008AIEMZ-T (Notes 2, 3)	CBT	3.0	-40 to +85	5 Ld SC-70	P5.049
ISL9008AIEKZ-T (Notes 2, 3)	CBS	2.85	-40 to +85	5 Ld SC-70	P5.049
ISL9008AIEJZ-T (Notes 2, 3)	CBR	2.8	-40 to +85	5 Ld SC-70	P5.049
ISL9008AIEHZ-T (Notes 2, 3)	CBP	2.75	-40 to +85	5 Ld SC-70	P5.049
ISL9008AIEFZ-T (Notes 2, 3)	CBN	2.5	-40 to +85	5 Ld SC-70	P5.049
ISL9008AIETZ-T (Notes 2, 3)	CDW	1.9	-40 to +85	5 Ld SC-70	P5.049
ISL9008AIECZ-T (Notes 2, 3)	CBM	1.8	-40 to +85	5 Ld SC-70	P5.049
ISL9008AIEBZ-T (Notes 2, 3)	CBL	1.5	-40 to +85	5 Ld SC-70	P5.049
ISL9008AIRUBZ-T (Note 4)	P	1.5	-40 to +85	6 Ld µTDFN	L6.1.6x1.6A
ISL9008AIRUCZ-T (Note 4)	Q	1.8	-40 to +85	6 Ld µTDFN	L6.1.6x1.6A
ISL9008AIRUFZ-T (Note 4)	R	2.5	-40 to +85	6 Ld µTDFN	L6.1.6x1.6A
ISL9008AIRUHZ-T (Note 4)	S	2.75	-40 to +85	6 Ld µTDFN	L6.1.6x1.6A
ISL9008AIRUJZ-T (Note 4)	T	2.8	-40 to +85	6 Ld µTDFN	L6.1.6x1.6A
ISL9008AIRUKZ-T (Note 4)	V	2.85	-40 to +85	6 Ld µTDFN	L6.1.6x1.6A
ISL9008AIRUMZ-T (Note 4)	W	3.0	-40 to +85	6 Ld µTDFN	L6.1.6x1.6A
ISL9008AIRUNZ-T (Note 4)	Y	3.3	-40 to +85	6 Ld µTDFN	L6.1.6x1.6A

NOTES:

1. For other output voltages, contact Intersil Marketing.
2. These Intersil Pb-free plastic packaged products employ special Pb-free material sets, molding compounds/die attach materials, and 100% matte tin plate plus anneal (e3 termination finish, which is RoHS compliant and compatible with both SnPb and Pb-free soldering operations). Intersil Pb-free products are MSL classified at Pb-free peak reflow temperatures that meet or exceed the Pb-free requirements of IPC/JEDEC J STD-020.
3. The part marking is located on the bottom of the part.
4. These Intersil Pb-free plastic packaged products employ special Pb-free material sets; molding compounds/die attach materials and NiPdAu plate - e4 termination finish, which is RoHS compliant and compatible with both SnPb and Pb-free soldering operations. Intersil Pb-free products are MSL classified at Pb-free peak reflow temperatures that meet or exceed the Pb-free requirements of IPC/JEDEC J STD-020.
5. Please refer to TB347 for details on reel specifications.
6. For Moisture Sensitivity Level (MSL), please see product information page for ISL9008A. For more information on MSL, please see tech brief TB363

Absolute Maximum Ratings

Supply Voltage (V_{IN}) . . . . . +7.1V
V_O Pin . . . . . +3.6V
All Other Pins . . . . . -0.3V to (VIN+0.3V)

Recommended Operating Conditions

Ambient Temperature Range (T_A) . . . . . -40°C to +85°C
Supply Voltage (V_{IN}) . . . . . 2.3 to 6.5V

Thermal Information

Thermal Resistance	θ_{JA} (°C/W)
5 Ld SC-70 Package (Note 7)	231
6 Ld µTDFN Package (Note 8)	125

Junction Temperature Range . . . . . -40°C to +125°C
Operating Temperature Range . . . . . -40°C to +85°C
Storage Temperature Range . . . . . -65°C to +150°C
Pb-free reflow profile . . . . . see TB493

CAUTION: Do not operate at or near the maximum ratings listed for extended periods of time. Exposure to such conditions may adversely impact product reliability and result in failures not covered by warranty.

NOTES:

7. θ_{JA} is measured with the component mounted on a high effective thermal conductivity test board in free air. See Tech Brief TB379 for details.
8. θ_{JA} is measured in free air with the component mounted on a high effective thermal conductivity test board with “direct attach” features. See Tech Brief TB379.

Electrical Specifications

Unless otherwise noted, all parameters are established over the operational supply voltage and temperature range of the device as follows: TA = -40°C to +85°C; VIN = (VO + 0.5V) to 6.5V with a minimum VIN of 2.3V; CIN = 1µF; CO = 1µF.

PARAMETER	SYMBOL	TEST CONDITIONS	MIN (Note 11)	TYP	MAX (Note 11)	UNITS
DC CHARACTERISTICS						
Supply Voltage	V_{IN}		2.3		6.5	V
Ground Current	I_{DD}	Quiescent condition: I_O = 0µA		46	66	µA
Shutdown Current	I_{DDS}			0.5	1.2	µA
UVLO Threshold	V_{UV+}		1.9	2.1	2.3	V
	V_{UV-}		1.6	1.8	2.0	V
Regulation Voltage Accuracy		Initial accuracy at V_{IN} = V_O + 0.5V, I_O = 10mA, T_J = +25°C	-0.7		+0.7	%
		V_{IN} = V_O + 0.5V to 6.5V, I_O = 10µA to150mA, T_J = +25°C	-0.8		+0.8	%
		V_{IN} = V_O + 0.5V to 6.5V, I_O = 10µA to 150mA, T_J = -40°C to +125°C	-1.8		+1.8	%
Maximum Output Current	I_{MAX}	Continuous	150			mA
Internal Current Limit	I_{LIM}		175	265	355	mA
Drop-out Voltage (Note 10)	V_{DO1}	I_O = 150mA; V_O < 2.5V		300	500	mV
	V_{DO2}	I_O = 150mA; 2.5V ≤ V_O ≤ 2.8V		250	400	mV
	V_{DO3}	I_O = 150mA; 2.8V < V_O		200	325	mV
Thermal Shutdown Temperature	T_{SD+}			140		°C
	T_{SD-}			110		°C
AC CHARACTERISTICS						
Ripple Rejection (Note 9)		I_O = 10mA, V_{IN} = 2.8V(min), V_O = 1.8V				
		at 1kHz		65		dB
		at 10kHz		45		dB
		at 100kHz		35		dB
Output Noise Voltage (Note 9)		V_O = 1.5V, T_A = +25°C				
		BW = 10Hz to 100kHz, I_O = 100µA		45		μV_{RMS}
		BW = 10Hz to 100kHz, I_O = 10mA		65		μV_{RMS}
DEVICE START-UP CHARACTERISTICS						
Device Enable Time	t_{EN}	Time from assertion of the ENx pin to when the output voltage reaches 95% of the V_O(nom)		250	500	µs

Electrical Specifications Unless otherwise noted, all parameters are established over the operational supply voltage and temperature range of the device as follows: TA = -40°C to +85°C; VIN = (VO + 0.5V) to 6.5V with a minimum VIN of 2.3V; CIN = 1µF; CO = 1µF.

PARAMETER	SYMBOL	TEST CONDITIONS	MIN (Note 11)	TYP	MAX (Note 11)	UNITS
LDO Soft-start Ramp Rate	t_{SSR}	Slope of linear portion of LDO output voltage ramp during start-up		30	60	µs/V
EN PIN CHARACTERISTICS						
Input Low Voltage	V_{IL}		-0.3		0.4	V
Input High Voltage	V_{IH}		1.4		V_{IN} + 0.3	V
Input Leakage Current	I_{IL}, I_{IH}				0.1	µA
Pin Capacitance	C_{PIN}	Informative		5		pF

NOTES:

9. Limits established by characterization and are not production tested.
10. VOx = 0.98*VOx(NOM); Valid for VOx greater than 1.85V.
11. Parameters with MIN and/or MAX limits are 100% tested at +25°C, unless otherwise specified. Temperature limits established by characterization and are not production tested..

Typical Performance Curves

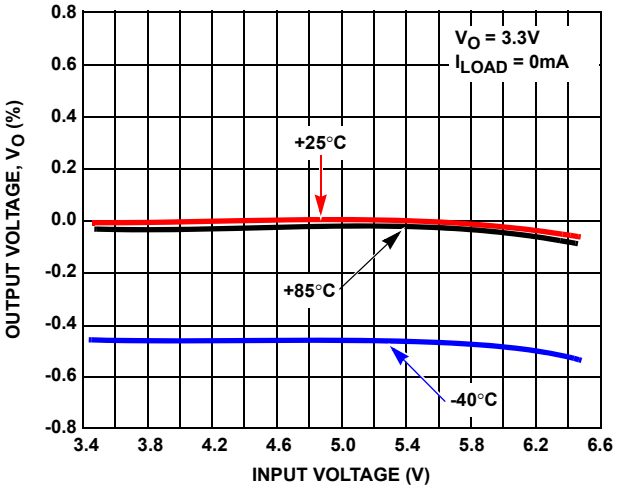

FIGURE 1. OUTPUT VOLTAGE vs INPUT VOLTAGE (3.3V OUTPUT)

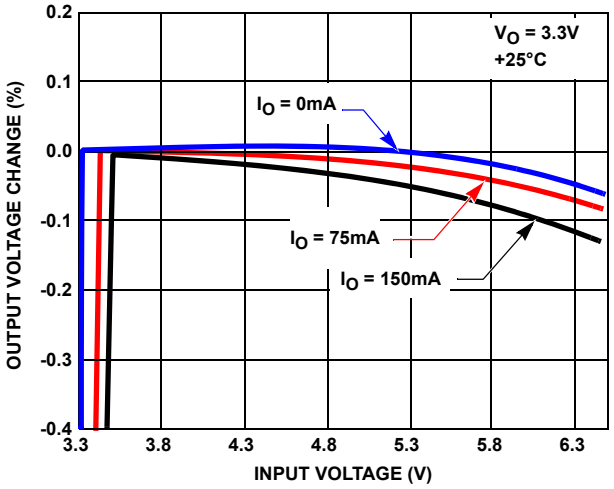

FIGURE 2. OUTPUT VOLTAGE CHANGE (%) vs INPUT VOLTAGE (3.3V OUTPUT)

Typical Performance Curves (Continued)

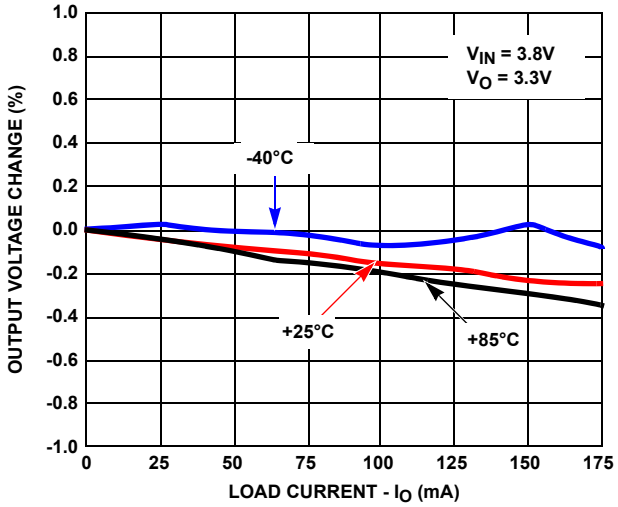

FIGURE 3. OUTPUT VOLTAGE vs LOAD CURRENT

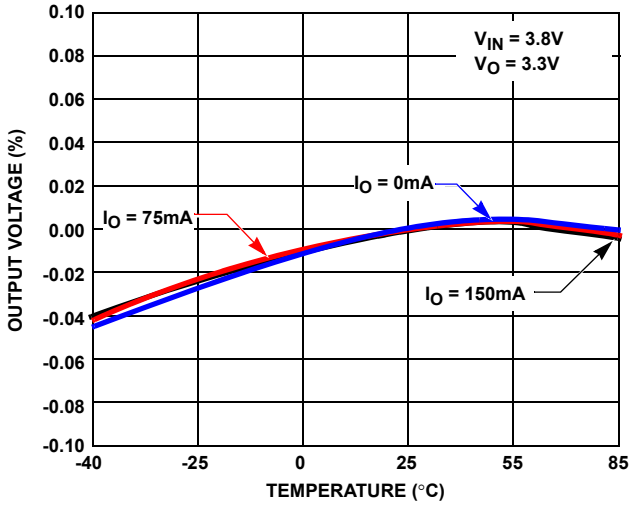

FIGURE 4. OUTPUT VOLTAGE vs TEMPERATURE

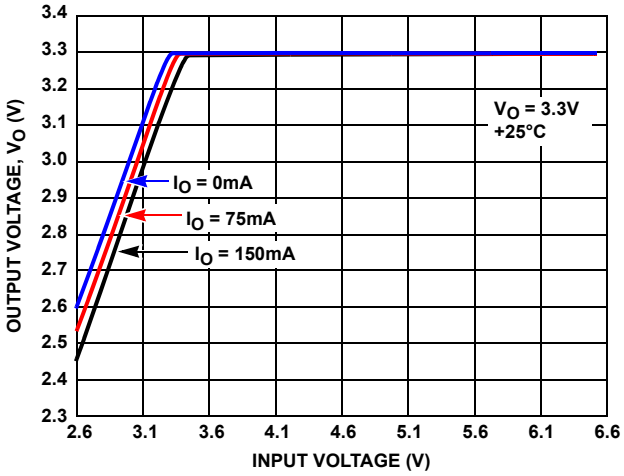

FIGURE 5. DROPOUT VOLTAGE vs INPUT VOLTAGE (3.3V OUTPUT)

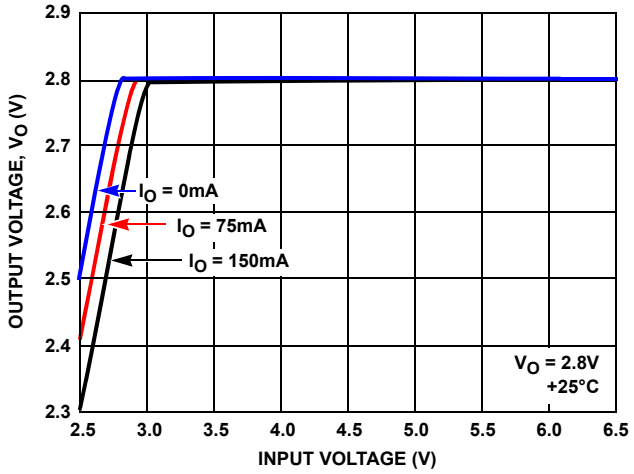

FIGURE 6. DROPOUT VOLTAGE vs INPUT VOLTAGE (2.8V OUTPUT)

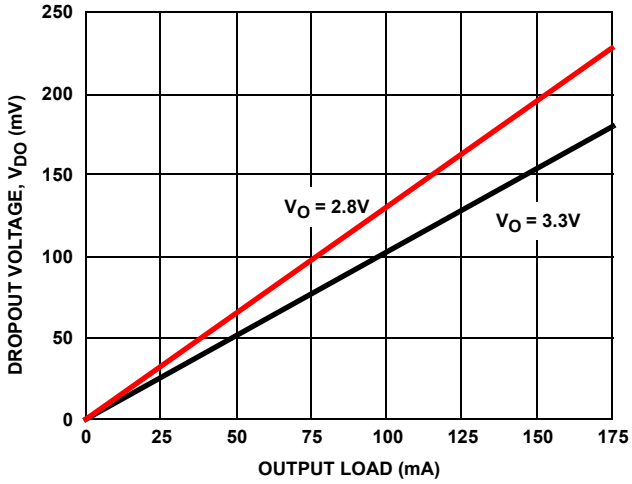

FIGURE 7. DROPOUT VOLTAGE vs LOAD CURRENT

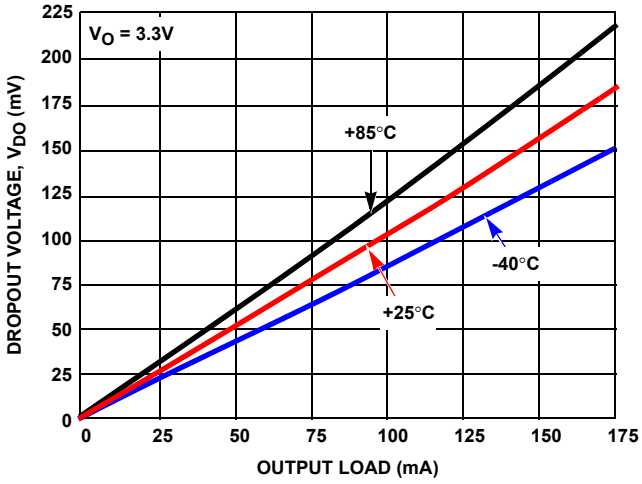

FIGURE 8. DROPOUT VOLTAGE vs LOAD CURRENT

Typical Performance Curves (Continued)

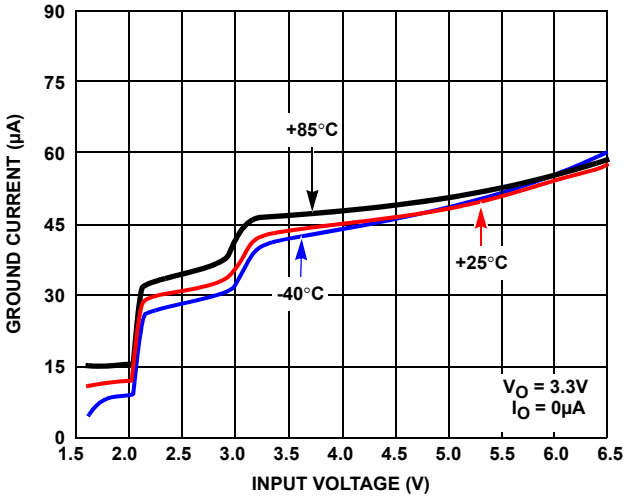

FIGURE 9. GROUND CURRENT vs INPUT VOLTAGE

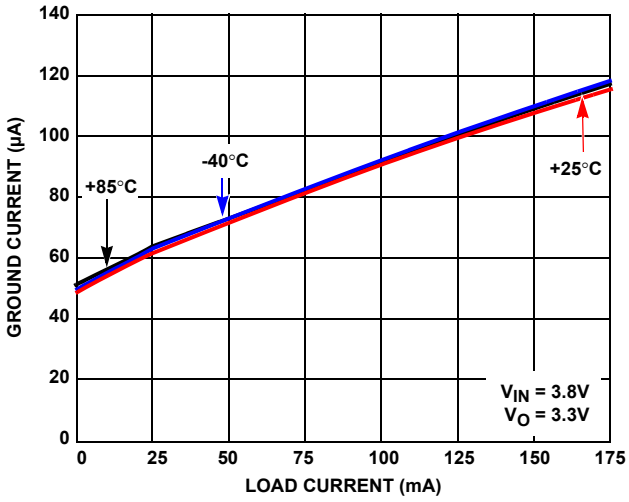

FIGURE 10. GROUND CURRENT vs LOAD

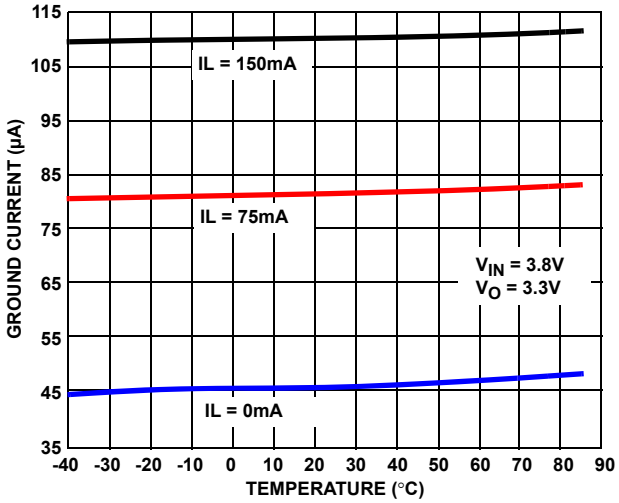

FIGURE 11. GROUND CURRENT vs TEMPERATURE

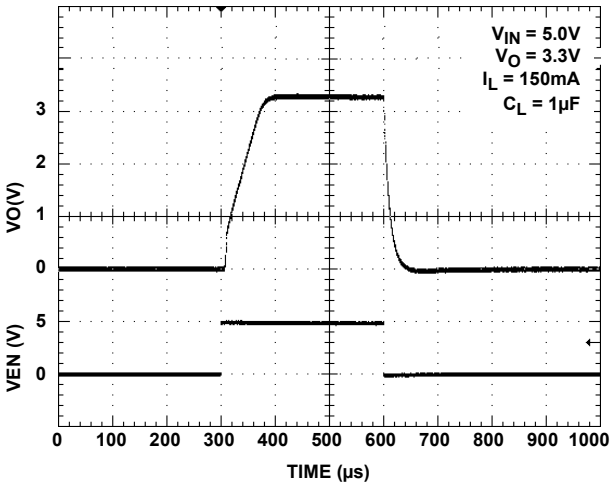

FIGURE 12. TURN ON/TURN OFF RESPONSE

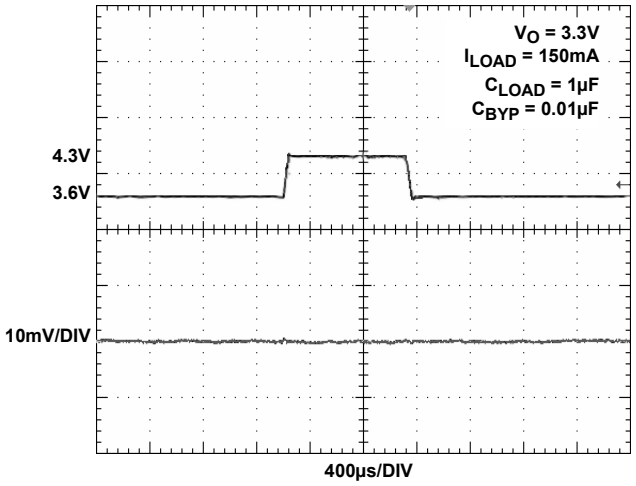

FIGURE 13. LINE TRANSIENT RESPONSE, 3.3V OUTPUT

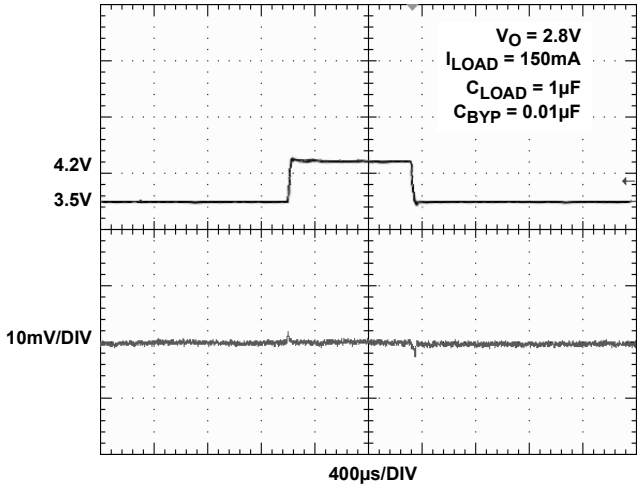

FIGURE 14. LINE TRANSIENT RESPONSE, 2.8V OUTPUT

Typical Performance Curves (Continued)

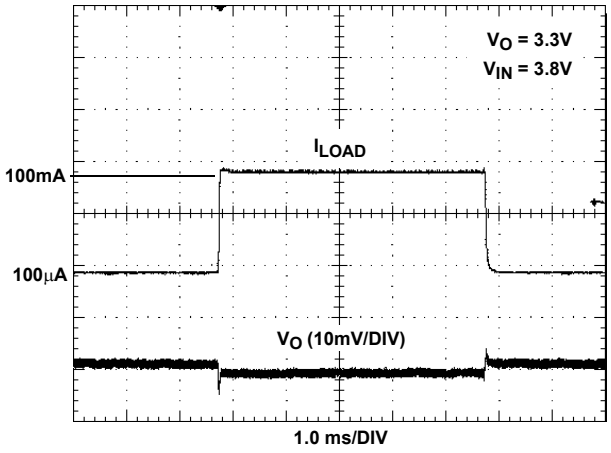

FIGURE 15. LOAD TRANSIENT RESPONSE

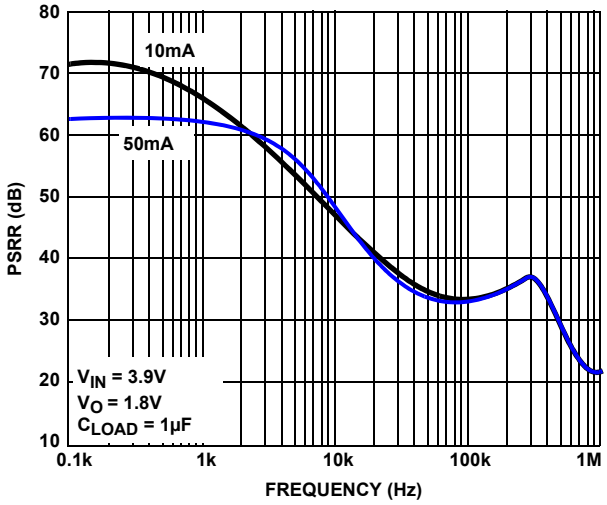

FIGURE 16. PSRR vs FREQUENCY

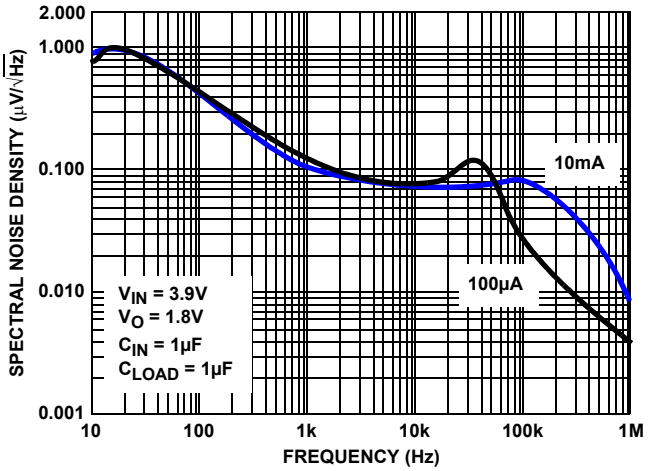

FIGURE 17. SPECTRAL NOISE DENSITY vs FREQUENCY

Pin Description

5 LD SC-70 PIN NUMBER	6 LD µTDFN PIN NUMBER	PIN NAME	DESCRIPTION
5	1	VO	LDO Output. Connect a 1µF capacitor of value to GND
2	2	GND	GND is the connection to system ground. Connect to PCB Ground plane.
4	3 and 5	NC	No connect.
3	4	EN	Output Enable. When this signal goes high, the LDO is turned on.
1	6	VIN	Supply Voltage/LDO Input. Connect a 1µF capacitor to GND.

Typical Application

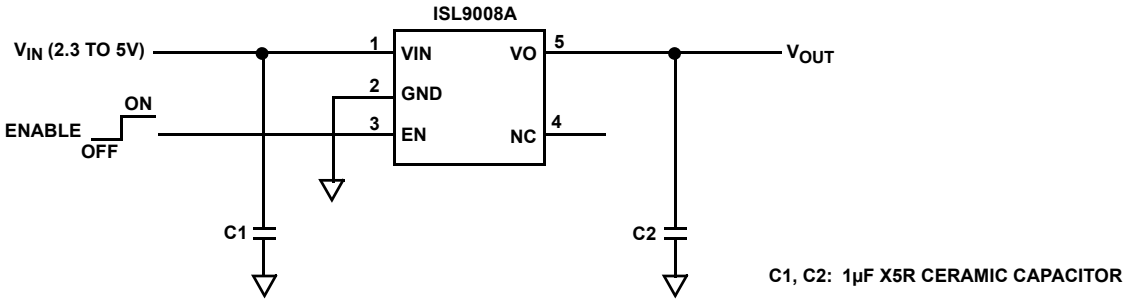

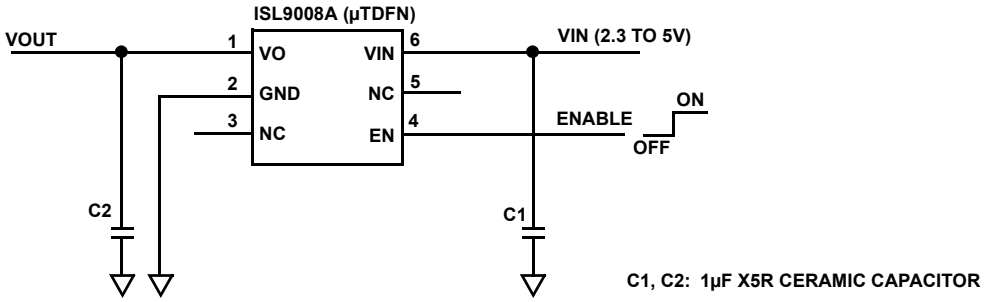

Block Diagram

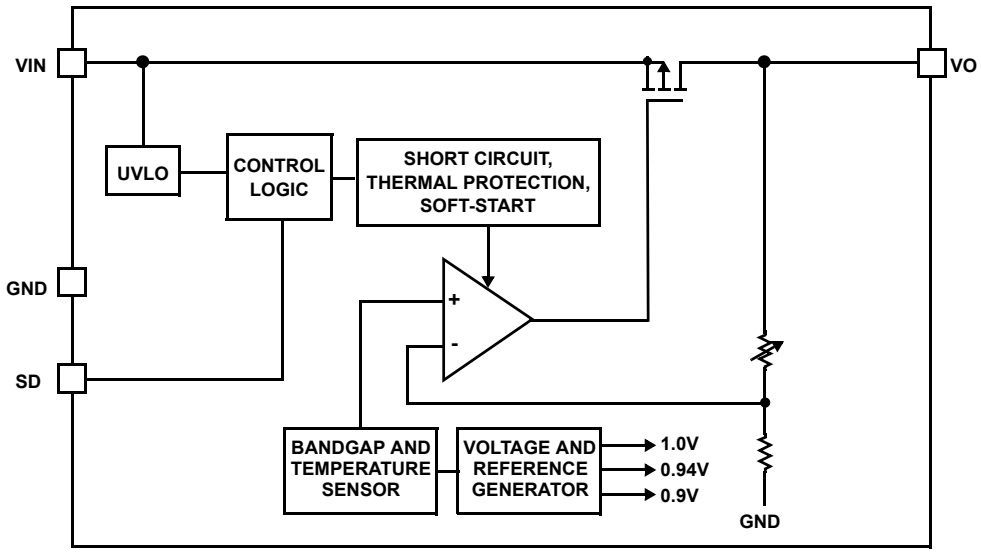

Functional Description

The ISL9008A contains all circuitry required to implement a high performance LDO. High performance is achieved through a circuit that delivers fast transient response to varying load conditions. In a quiescent condition, the ISL9008A adjusts its biasing to achieve the lowest standby current consumption.

The device also integrates current limit protection, smart thermal shutdown protection, and soft-start. Smart Thermal shutdown protects the device against overheating. Soft-start minimizes start-up input current surges without causing excessive device turn-on time.

Power Control

The ISL9008A has an enable pin, EN, to control power to the LDO output. When EN is low, the device is in shutdown mode. In this condition, all on-chip circuits are off, and the device draws minimum current, typically less than 0.3µA. When the EN pin goes high, the device first polls the output of the UVLO detector to ensure that the VIN voltage is at least 2.1V (typical). Once verified, the device initiates a start-up sequence. During the start-up sequence, trim settings are first read and latched. Then sequentially, the bandgap, reference voltage and current generation circuitry turn on. Once the references are stable, the LDO powers up.

During operation, whenever the V_{IN} voltage drops below about 1.84V, the ISL9008A immediately disables the LDO output. When V_{IN} rises back above 2.1V (assuming the EN pin is high), the device reinitiates its start-up sequence and LDO operation resumes automatically.

Reference Generation

The reference generation circuitry includes a trimmed bandgap, a trimmed voltage reference divider, a trimmed current reference generator, and an RC noise filter.

The bandgap generates a zero temperature coefficient (TC) voltage for the regulator reference and other voltage references required for current generation and over-temperature detection.

A current generator provides references required for adaptive biasing as well as references for LDO output current limit and thermal shutdown determination.

LDO Regulation and Programmable Output Divider

The LDO Regulator is implemented with a high-gain operational amplifier driving a PMOS pass transistor. The design of the ISL9008A provides a regulator that has low quiescent current, fast transient response, and overall stability across all operating and load current conditions. LDO stability is guaranteed for a 1µF to 4.7µF output capacitor that has a tolerance better than 20% and ESR less than 200mW. The design is performance-optimized for a 1µF capacitor. Unless limited by the application, use of an output capacitor value above 4.7µF is not recommended as LDO performance improvement is minimal.

Soft-start circuitry integrated into each LDO limits the initial ramp-up rate to about 30µs/V to minimize current surge. The ISL9008A provides short-circuit protection by limiting the output current to about 265mA (typ).

The LDO uses an independently trimmed 1V reference as its input. An internal resistor divider drops the LDO output voltage down to 1V. This is compared to the 1V reference for regulation. The resistor division ratio is programmed in the factory.

Overheat Detection

The bandgap outputs a proportional-to-temperature current that is indicative of the temperature of the silicon. This current is compared with references to determine if the device is in danger of damage due to overheating. When the die temperature reaches about +140°C, the LDO momentarily shuts down until the die cools sufficiently. In the overheat condition, if the LDO sources more than 50mA it will be shut off. Once the die temperature falls back below about +110°C, the disabled LDO is re-enabled and soft-start automatically takes place.

Exposed Thermal Pad

The ISL9008A with µTDFN package has an exposed thermal pad at the bottom side of the package. The PCB layout should connect the exposed pad to some copper on the component layer for a good thermal conductivity. Since the copper area on the component layer is limited by the surrounding pins of the package, it is more effective to use some thermal vias to conduct the heat to other copper layers if possible.

Electrically, the copper and vias connecting to the exposed pad should be isolated from any other pin connection, they are strictly for thermal enhancement purpose.

© Copyright Intersil Americas LLC 2006-2014. All Rights Reserved.
All trademarks and registered trademarks are the property of their respective owners.

For additional products, see www.intersil.com/en/products.html

Intersil products are manufactured, assembled and tested utilizing ISO9001 quality systems as noted in the quality certifications found at www.intersil.com/en/support/qualandreliability.html

Intersil products are sold by description only. Intersil may modify the circuit design and/or specifications of products at any time without notice, provided that such modification does not, in Intersil's sole judgment, affect the form, fit or function of the product. Accordingly, the reader is cautioned to verify that datasheets are current before placing orders. Information furnished by Intersil is believed to be accurate and reliable. However, no responsibility is assumed by Intersil or its subsidiaries for its use; nor for any infringements of patents or other rights of third parties which may result from its use. No license is granted by implication or otherwise under any patent or patent rights of Intersil or its subsidiaries.

For information regarding Intersil Corporation and its products, see www.intersil.com

Ultra Thin Dual Flat No-Lead Plastic Package (UTDFN)

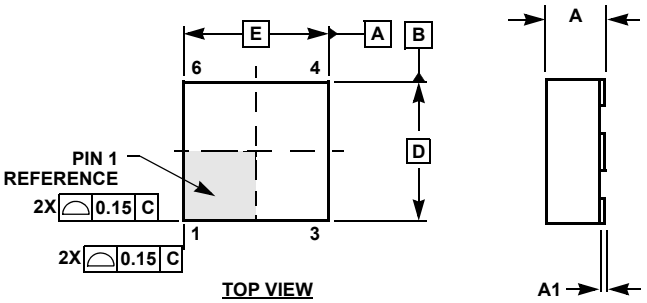

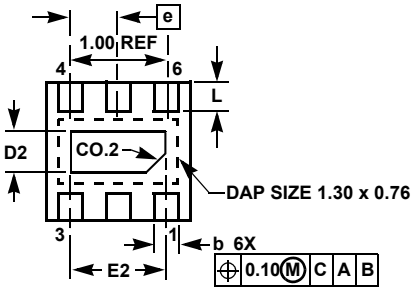

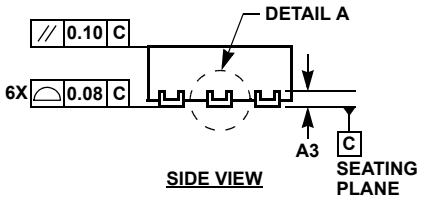

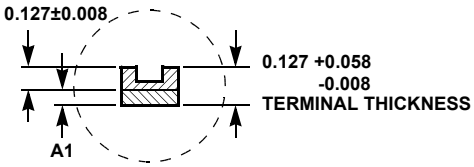

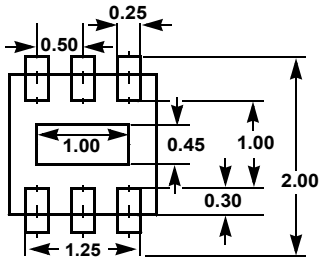

L6.1.6x1.6A

6 LEAD ULTRA THIN DUAL FLAT NO-LEAD PLASTIC PACKAGE

SYMBOL	MILLIMETERS			NOTES
	MIN	NOMINAL	MAX	
A	0.45	0.50	0.55	-
A1	-	-	0.05	-
A3		0.127 REF		-
b	0.15	0.20	0.25	-
D	1.55	1.60	1.65	4
D2	0.40	0.45	0.50	-
E	1.55	1.60	1.65	4
E2	0.95	1.00	1.05	-
e		0.50 BSC		-
L	0.25	0.30	0.35	-

Rev. 1 6/06

NOTES:

1. Dimensions are in mm. Angles in degrees.
2. Coplanarity applies to the exposed pad as well as the terminals. Coplanarity shall not exceed 0.08mm.
3. Warpage shall not exceed 0.10mm.
4. Package length/package width are considered as special characteristics.
5. JEDEC Reference MO-229.
6. For additional information, to assist with the PCB Land Pattern Design effort, see Intersil Technical Brief TB389.

Small Outline Transistor Plastic Packages (SC70-5)

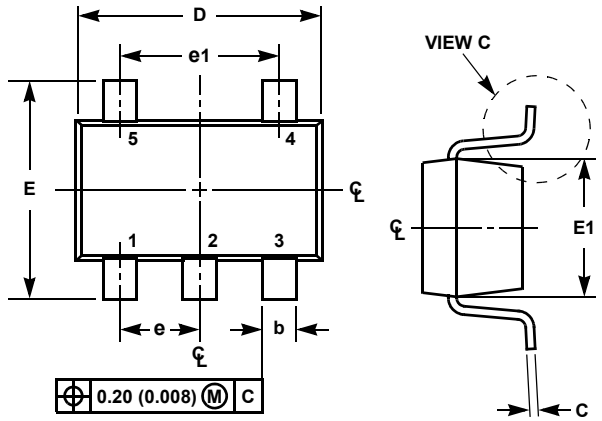

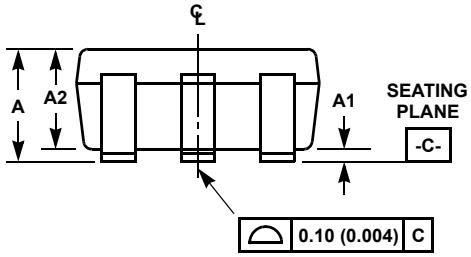

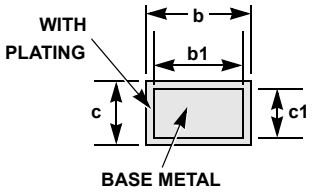

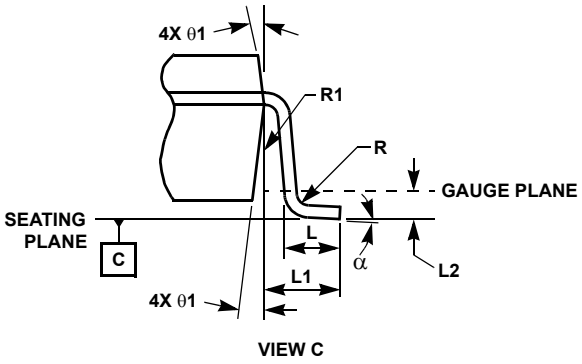

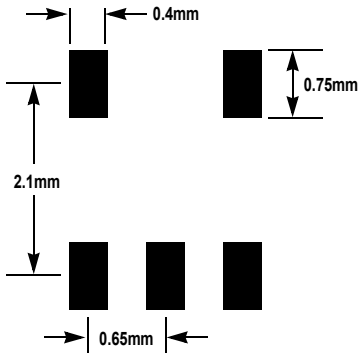

TYPICAL RECOMMENDED LAND PATTERN

P5.049

5 LEAD SMALL OUTLINE TRANSISTOR PLASTIC PACKAGE

SYMBOL	INCHES		MILLIMETERS		NOTES
	MIN	MAX	MIN	MAX	
A	0.031	0.043	0.80	1.10	-
A1	0.000	0.004	0.00	0.10	-
A2	0.031	0.039	0.80	1.00	-
b	0.006	0.012	0.15	0.30	-
b1	0.006	0.010	0.15	0.25	
c	0.003	0.009	0.08	0.22	6
c1	0.003	0.009	0.08	0.20	6
D	0.073	0.085	1.85	2.15	3
E	0.071	0.094	1.80	2.40	-
E1	0.045	0.053	1.15	1.35	3
e	0.0256 Ref		0.65 Ref		-
e1	0.0512 Ref		1.30 Ref		-
L	0.010	0.018	0.26	0.46	4
L1	0.017 Ref.		0.420 Ref.		-
L2	0.006 BSC		0.15 BSC		
α	0°	8°	0°	8°	-
N	5		5		5
R	0.004	-	0.10	-	
R1	0.004	0.010	0.15	0.25	

Rev. 3 7/07

NOTES:

1. Dimensioning and tolerances per ASME Y14.5M-1994.
2. Package conforms to EIAJ SC70 and JEDEC MO-203AA.
3. Dimensions D and E1 are exclusive of mold flash, protrusions, or gate burrs.
4. Footlength L measured at reference to gauge plane.
5. “N” is the number of terminal positions.
6. These Dimensions apply to the flat section of the lead between 0.08mm and 0.15mm from the lead tip.
7. Controlling dimension: MILLIMETER. Converted inch dimensions are for reference only.

ENTEGRECİ

Bu belge www.entegreci.com üzerinden sunulmaktadır.

Elektronik komponent tedarikinde Entegreci

Entegreci, Eskişehir merkezli, Türkiye geneline satış yapan bir elektronik komponent mağazasıdır. Entegreler (IC), mikrodenetleyiciler, transistörler, diyotlar, pasif elemanlar, konnektörler, modüller ve geliştirme kartları tek adetten seri üretim adetlerine kadar satılır. Ürün sayfalarında güncel stok durumunu, fiyatı ve datasheet bağlantısını bulabilirsiniz.

Parça koduyla arama

Üretici parça numarasını yazın; stok ve fiyatı hemen görün.

www.entegreci.com

Ürün kategorileri

Entegreden kapasitöre tüm elektronik komponent kategorileri.

Kategorilere göz atın

Üreticiler

Aradığınız üreticinin ürünlerini tek sayfada inceleyin.

Üreticileri görün

Toplu alım ve teklif

Listede olmayan ya da yüksek adetli parçalar için teklif isteyin.

Teklif isteyin

www.entegreci.com | **destek@entegreci.com** | **0850 305 90 34**

Entegreci is an online electronic components store based in Türkiye. Search by manufacturer part number to see stock, prices and datasheets for integrated circuits, microcontrollers, transistors, passive components and connectors, or request a quote for parts that are not listed.

Bu sayfa Entegreci tarafından eklenmiştir. Belgenin önceki sayfaları asıl yayıncısına aittir ve içeriği değiştirilmemiştir; en güncel sürüm için belgenin yayıncısına başvurun.