Off-Line Digital Green-Mode Quasi-Resonant PWM Controller

1 Description

The iW1602 is a high performance AC/DC power supply controller that uses digital control technology to build peak current mode PWM flyback power supplies. The device operates in quasi-resonant mode to provide high efficiency and includes a number of key built-in protection features while minimizing the external component count, simplifying EMI design and lowering the total bill of material cost. The iW1602 removes the need for secondary feedback circuit while achieving excellent line and load regulation. It also eliminates the need for loop compensation components while maintaining stability over all operating conditions. Pulse-by-pulse waveform analysis allows for a loop response that is much faster than traditional solutions, resulting in improved dynamic load response. The built-in power limit function enables optimized transformer design in universal off-line applications and allows for a wide input voltage range.

Dialog's innovative proprietary technology ensures that power supplies built with the iW1602 can achieve both the highest average active efficiency and low no-load power consumption, and have fast dynamic load response in a compact form factor in typical 5V, 2A, 10W applications. The iW1602 has unique user-configurable light-load operation modes to allow optimization of the system cost and performance according to the application requirements of dynamic load response and no-load power consumption.

2 Features

- User-configurable light-load operation modes for optimized dynamic load response and no-load power consumption
- No-load power consumption < 30mW at $230V_{AC}$ with fast dynamic load response in typical 5V, 2A 10W compact adapter/charger when a secondary-side controller with Active Voltage Positioning (AVP) function is used (iW676-30C)
- No-load power consumption < 75mW at $230V_{AC}$ along with fast dynamic load response in typical 5V, 2A 10W compact adapter/charger applications without a secondary-side AVP controller
- Tight constant-voltage and constant current regulation across line and load range
- Primary-side feedback eliminates optoisolators and simplifies design
- Intelligent low power management achieves ultra-low operating current (~250µA) at no-load
- Proprietary optimized 89kHz maximum PWM switching frequency with quasi-resonant operation achieves best size, efficiency and common mode noise
- User-configurable 5-level cable drop compensation provides design flexibility
- **EZ-EMI™** design enhances manufacturability
- Adaptive multi-mode PWM/PFM control improves efficiency
- Complies with CoC Version 5 Tier 2 and DOE level VI energy-efficiency specifications with ample margin
- Built-in single-point fault protections against output short-circuit, output over-voltage and output over-current
- Dedicated pins for external over-voltage protection, with latch function available
- ***SmartDefender™*** smart hiccup technology helps to address issues of soft shorts in cables and connectors by effectively reducing the average output power at fault conditions without latch
- Optional on-chip internal over-temperature protection
- No audible noise over entire operating range
- Space-saving SOT-23 package

3 Applications

- Compact AC/DC adapters/chargers for media tablets and smart phones
- AC/DC adapters for consumer electronics

© 2024 Renesas Electronics

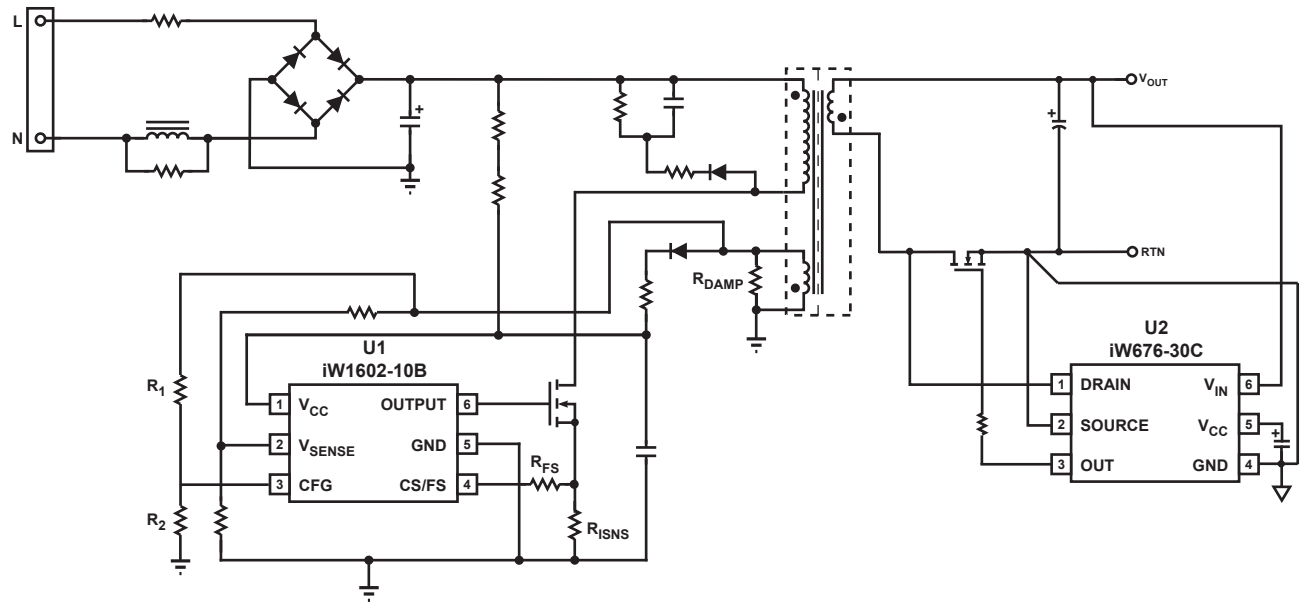

Figure 3.1 : iW1602-10B Typical Application Circuit Using iW676-30C as the Secondary-Side Synchronous Rectifier and Dynamic Load Detection IC (Minimum Switching Frequency is Set at 140Hz to Achieve < 30mW No-Load Power Consumption in 5V, 2A 10W Adapter Design)

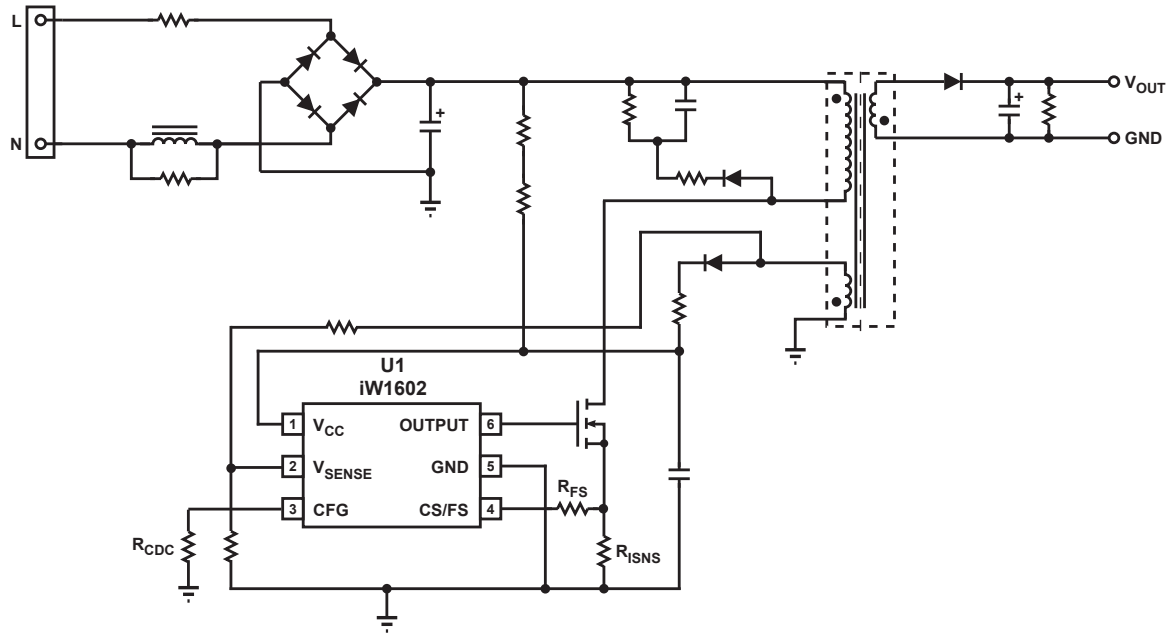

Figure 3.2 : iW1602 Typical Application Circuit (Minimum Switching Frequency is Set at 2kHz to Achieve < 75mW No-Load Power Consumption in 5V, 2A 10W Adapter Design)

© 2024 Renesas Electronics

4 Pinout Description

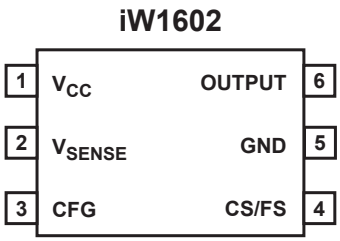

Figure 4.1 : 6-Lead SOT23 Package

Pin Number	Pin Name	Type	Pin Description
1	V_{CC}	Power Input	IC power supply.
2	V_{SENSE}	Analog Input	Auxiliary voltage sense. It is used for primary-side regulation and detection of secondary-side load transient signal.
3	CFG	Analog Input	It is used for external cable drop compensation (CDC) configuration and supplemental over-voltage protection (OVP).
4	CS/FS	Analog Input	Primary-side current sense and minimum switching frequency configuration. It is used for cycle-by-cycle peak-current control and limit in primary-side CV/CC regulation. It is also used for minimum switching frequency configuration.
5	GND	Ground	Ground.
6	OUTPUT	Output	Gate drive for the external MOSFET switch.

© 2024 Renesas Electronics

5 Absolute Maximum Ratings

Absolute maximum ratings are the parameter values or ranges which can cause permanent damage if exceeded.

Parameter	Symbol	Value	Units
DC supply voltage range (pin 1, I_{CC} = 20mA max)	V_{CC}	-0.3 to 25.0	V
Continuous DC supply current at V_{CC} pin (V_{CC} = 15V)	I_{CC}	20	mA
OUTPUT (pin 6)		-0.3 to 20.0	V
V_{SENSE} input (pin 2, I_{VSENSE} ≤ 10mA)		-0.7 to 4.0	V
CS/FS input (pin 4)		-0.3 to 4.0	V
CFG (pin 3, I_{CFG} ≤ 20mA)		-0.8 to 4.0	V
Maximum junction temperature	T_{JMAX}	150	°C
Operating junction temperature	T_{JOPT}	-40 to 150	°C
Storage temperature	T_{STG}	-65 to 150	°C
Thermal resistance junction-to-ambient	θ_{JA}	208	°C/W
ESD rating per JEDEC JS-001-2017		±2,000	V
Latch-up test per JESD78E		±100	mA

© 2024 Renesas Electronics

6 Physical Dimensions

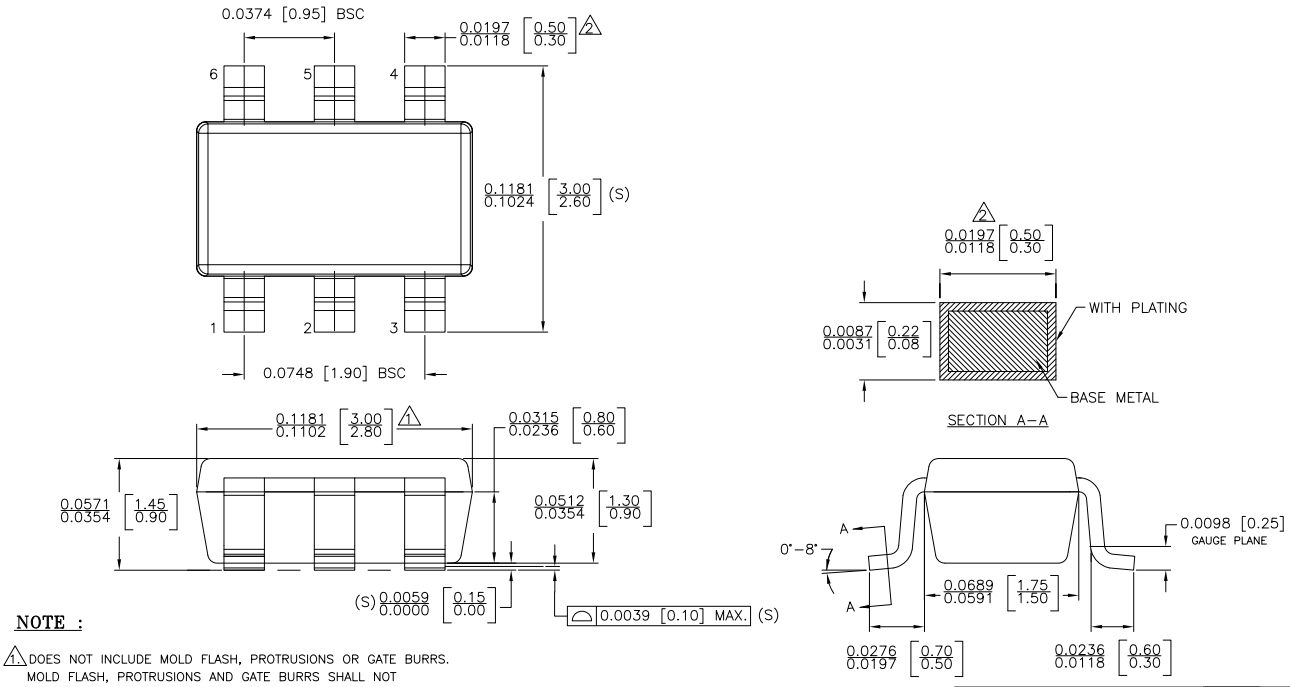

NOTE :

1. DOES NOT INCLUDE MOLD FLASH, PROTRUSIONS OR GATE BURRS. MOLD FLASH, PROTRUSIONS AND GATE BURRS SHALL NOT EXCEED 0.127 MM PER SIDE.
2. DOES NOT INCLUDE INTER–LEAD FLASH OR PROTRUSIONS. INTER–LEAD FLASH AND PROTRUSIONS SHALL NOT EXCEED 0.127 MM PER SIDE.
3. DIE IS FACING UP FOR MOLD.DIE IS FACING DOWN FOR TRIM/FORM.
4. THIS PART IS COMPLIANT WITH EIAJ SPECIFICATION SC74A AND JEDEC SPECIFICATION MO–178AB.
5. LEAD SPAN/STAND OFF HEIGHT/COPLANARITY ARE CONSIDERED AS SPECIAL CHARACTERISTIC.(S)
6. CONTROLLING DIMENSIONS IN INCHES. [mm]

dialog SEMICONDUCTOR

STATUS: RELEASED	SCALE: DO NOT SCALE
TERMINAL FINISH: 100% Sn or NiPdAu (PPF)	
TITLE: 6 SOT23 PACKAGE OUTLINE	
REV: A / REVISION NOTE: NEW DRAWING	DATE: 02–MAR–2015

© 2024 Renesas Electronics

7 Ordering Information

Part Number	Status	Options	Package	Description
iW1602-00	Not recommended for new design	No latch, 3.0V CC shutdown voltage, smart hiccup with 2/8 duty cycle	SOT-23	Tape & Reel[1]
iW1602-01	Not recommended for new design	OVP latch, CC shutdown and latch, 3.5V CC shutdown voltage, no smart hiccup	SOT-23	Tape & Reel[1]
iW1602-02	Not recommended for new design	OVP latch, “no CC” operation and latch, no smart hiccup	SOT-23	Tape & Reel[1]
iW1602-03	Not recommended for new design	No latch, 3.0V CC shutdown voltage, smart hiccup with 2/8 duty cycle, Internal OTP disabled	SOT-23	Tape & Reel[1]
iW1602-00B	Active	No latch, 3.0V CC shutdown voltage, smart hiccup with 2/8 duty cycle	SOT-23	Tape & Reel[1]
iW1602-01B	Active	OVP latch, CC shutdown and latch, 3.5V CC shutdown voltage, no smart hiccup	SOT-23	Tape & Reel[1]
iW1602-02B	Active	OVP latch, “no CC” operation and latch, no smart hiccup	SOT-23	Tape & Reel[1]
iW1602-03B	Active	No latch, 3.0V CC shutdown voltage, smart hiccup with 2/8 duty cycle, Internal OTP disabled	SOT-23	Tape & Reel[1]
iW1602-10B	Active	No latch, 3.0V CC shutdown voltage, smart hiccup with 2/8 duty cycle, optimized to pair with iW676-30C	SOT-23	Tape & Reel[1]
iW1602-11B	Active	No latch, 3.5V CC shutdown voltage, smart hiccup with 2/8 duty cycle	SOT-23	Tape & Reel[1]

Note 1: Tape and reel packing quantity is 3,000/reel. Minimum packing quantity is 3,000.

© 2024 Renesas Electronics

IMPORTANT NOTICE AND DISCLAIMER

RENESAS ELECTRONICS CORPORATION AND ITS SUBSIDIARIES (“RENESAS”) PROVIDES TECHNICAL SPECIFICATIONS AND RELIABILITY DATA (INCLUDING DATASHEETS), DESIGN RESOURCES (INCLUDING REFERENCE DESIGNS), APPLICATION OR OTHER DESIGN ADVICE, WEB TOOLS, SAFETY INFORMATION, AND OTHER RESOURCES “AS IS” AND WITH ALL FAULTS, AND DISCLAIMS ALL WARRANTIES, EXPRESS OR IMPLIED, INCLUDING, WITHOUT LIMITATION, ANY IMPLIED WARRANTIES OF MERCHANTABILITY, FITNESS FOR A PARTICULAR PURPOSE, OR NON-INFRINGEMENT OF THIRD PARTY INTELLECTUAL PROPERTY RIGHTS.

These resources are intended for developers who are designing with Renesas products. You are solely responsible for (1) selecting the appropriate products for your application, (2) designing, validating, and testing your application, and (3) ensuring your application meets applicable standards, and any other safety, security, or other requirements. These resources are subject to change without notice. Renesas grants you permission to use these resources only to develop an application that uses Renesas products. Other reproduction or use of these resources is strictly prohibited. No license is granted to any other Renesas intellectual property or to any third-party intellectual property. Renesas disclaims responsibility for, and you will fully indemnify Renesas and its representatives against, any claims, damages, costs, losses, or liabilities arising from your use of these resources. Renesas’ products are provided only subject to Renesas’ Terms and Conditions of Sale or other applicable terms agreed to in writing. No use of any Renesas resources expands or otherwise alters any applicable warranties or warranty disclaimers for these products.

© 2024 Renesas Electronics Corporation. All rights reserved.

(Disclaimer Rev.1.01 Jan 2024)

Corporate Headquarters

TOYOSU FORESIA, 3-2-24 Toyosu
Koto-ku, Tokyo 135-0061, Japan
www.renesas.com

Contact Information

For further information on a product, technology, the most up-to-date version of a document, or your nearest sales office, please visit:
www.renesas.com/contact/

Trademarks

Renesas and the Renesas logo are trademarks of Renesas Electronics Corporation. All trademarks and registered trademarks are the property of their respective owners.

ENTEGRECİ

Bu belge www.entegreci.com üzerinden sunulmaktadır.

Elektronik komponent tedarikinde Entegreci

Entegreci, Eskişehir merkezli, Türkiye geneline satış yapan bir elektronik komponent mağazasıdır. Entegreler (IC), mikrodenetleyiciler, transistörler, diyotlar, pasif elemanlar, konnektörler, modüller ve geliştirme kartları tek adetten seri üretim adetlerine kadar satılır. Ürün sayfalarında güncel stok durumunu, fiyatı ve datasheet bağlantısını bulabilirsiniz.

Parça koduyla arama

Üretici parça numarasını yazın; stok ve fiyatı hemen görün.

www.entegreci.com

Ürün kategorileri

Entegreden kapasitöre tüm elektronik komponent kategorileri.

Kategorilere göz atın

Üreticiler

Aradığınız üreticinin ürünlerini tek sayfada inceleyin.

Üreticileri görün

Toplu alım ve teklif

Listede olmayan ya da yüksek adetli parçalar için teklif isteyin.

Teklif isteyin

www.entegreci.com | **destek@entegreci.com** | **0850 305 90 34**

Entegreci is an online electronic components store based in Türkiye. Search by manufacturer part number to see stock, prices and datasheets for integrated circuits, microcontrollers, transistors, passive components and connectors, or request a quote for parts that are not listed.

Bu sayfa Entegreci tarafından eklenmiştir. Belgenin önceki sayfaları asıl yayıncısına aittir ve içeriği değiştirilmemiştir; en güncel sürüm için belgenin yayıncısına başvurun.