LP3878-ADJ Micropower 800-mA Low-Noise "Ceramic Stable" Adjustable Voltage Regulator for 1-V to 5-V Applications

1 Features

- Input Supply Voltage: 2.5 V to 16V
- Output Voltage Range: 1 V to 5.5 V
- Designed for Use With Low-ESR Ceramic Capacitors
- Very Low Output Noise
- 8-Lead SO PowerPAD™ and WSON Surface-Mount Packages
- < 10-µA Quiescent Current in Shutdown
- Low Ground Pin Current at all Loads
- Overtemperature and Overcurrent Protection
- –40°C to 125°C Operating Junction Temperature Range

2 Applications

- ASIC Power Supplies In:
  - Desktops, Notebooks, and Graphic Cards
  - Set Top Boxes, Printers, and Copiers
- DSP and FPGA Power Supplies
- SMPS Post-Regulator
- Medical Instrumentation

3 Description

The LP3878-ADJ is an 800-mA, adjustable output, voltage regulator designed to provide high performance and low noise in applications requiring output voltages as low as 1 V.

Using an optimized VIP (Vertically Integrated PNP) process, the LP3878-ADJ delivers superior performance:

- Ground Pin Current: Typically 5.5 mA at 800-mA load, and 180 µA at 100-µA load.
- Low Power Shutdown: The LP3878-ADJ draws less than 10-µA quiescent current when the $\overline{\text{SHUTDOWN}}$ pin is pulled low.
- Precision Output: Ensured output voltage accuracy is 1% at room temperature.
- Low Noise: Broadband output noise is only 18 µV (typical) with a 10-nF bypass capacitor.

Device Information[1]

PART NUMBER	PACKAGE	BODY SIZE (NOM)
LP3878-ADJ	SO PowerPAD (8)	4.89 mm × 3.90 mm
	WSON (8)	4.00 mm × 4.00 mm

(1) For all available packages, see the orderable addendum at the end of the data sheet.

Basic Application Circuit

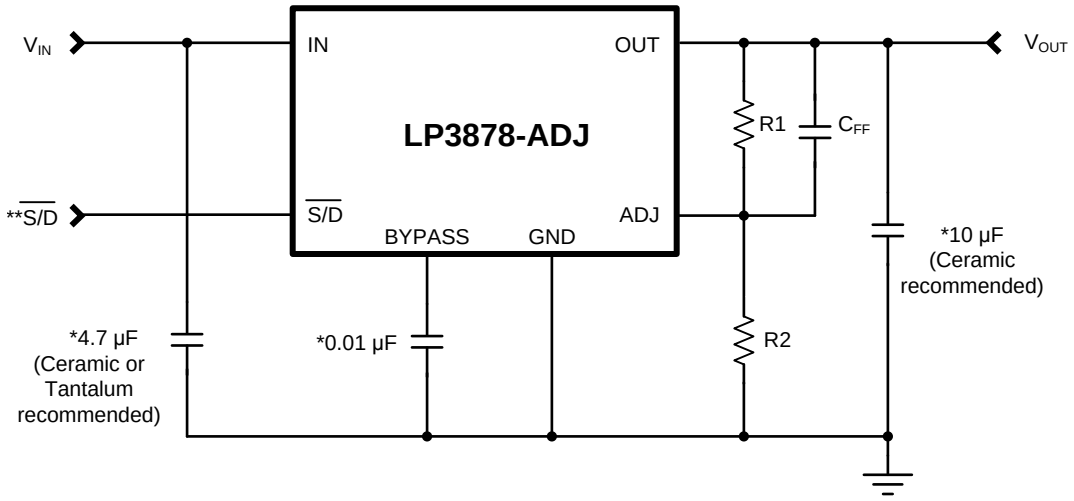

*Capacitor values shown are minimum required to assure stability. A larger output capacitor provides improved dynamic response. Output capacitor must meet ESR requirements (see *Application Information*).
**The $\overline{\text{SHUTDOWN}}$ (or $\overline{\text{S/D}}$) pin must be actively terminated (see *Device Functional Modes*). Tie to IN (pin 4) if not used.

An IMPORTANT NOTICE at the end of this data sheet addresses availability, warranty, changes, use in safety-critical applications, intellectual property matters and other important disclaimers. PRODUCTION DATA.

Table of Contents

1 Features ... 1
2 Applications ... 1
3 Description ... 1
4 Revision History ... 2
5 Pin Configuration and Functions ... 3
6 Specifications ... 4
6.1 Absolute Maximum Ratings ... 4
6.2 ESD Ratings ... 4
6.3 Recommended Operating Conditions ... 4
6.4 Thermal Information ... 4
6.5 Electrical Characteristics ... 5
6.6 Typical Characteristics ... 6
7 Detailed Description ... 11
7.1 Overview ... 11
7.2 Functional Block Diagram ... 11
7.3 Feature Description ... 11
7.4 Device Functional Modes ... 12
8 Application and Implementation ... 13
8.1 Application Information ... 13
8.2 Typical Application ... 13
9 Power Supply Recommendations ... 17
10 Layout ... 17
10.1 Layout Guidelines ... 17
10.2 Layout Example ... 17
10.3 Power Dissipation ... 17
11 Device and Documentation Support ... 18
11.1 Documentation Support ... 18
11.2 Trademarks ... 18
11.3 Electrostatic Discharge Caution ... 18
11.4 Glossary ... 18
12 Mechanical, Packaging, and Orderable Information ... 18

4 Revision History

NOTE: Page numbers for previous revisions may differ from page numbers in the current version.

Changes from Revision C (December 2014) to Revision D **Page**

- Deleted trademark symbol from VIP - no longer trademark; add reference design icon to Top Navigators ... 1
- Deleted soldering info - now in POA ... 4
- Changed wording of footnote 5 to Ab Max Ratings ... 4
- Changed I_{OUT} to I_{OUT} throughout document ... 5
- Changed wording of *Reverse Input-Output Voltage* ... 11
- Changed outpin pin to OUT pin ... 15
- Added new paragraph to *Noise Bypass Capacitor* subsection ... 15

Changes from Revision B (April 2013) to Revision C **Page**

- Added *Pin Configuration and Functions* section, *ESD Ratings* table, *Feature Description* section, *Device Functional Modes*, *Application and Implementation* section, *Power Supply Recommendations* section, *Layout* section, *Device and Documentation Support* section, and *Mechanical, Packaging, and Orderable Information* section; update thermal values ... 1

Changes from Revision A (April 2013) to Revision B **Page**

- Changed layout of National Data Sheet to TI format ... 16

Copyright © 2005–2015, Texas Instruments Incorporated

5 Pin Configuration and Functions

SO PowerPAD (DDA) Package
8-Pin
Top View

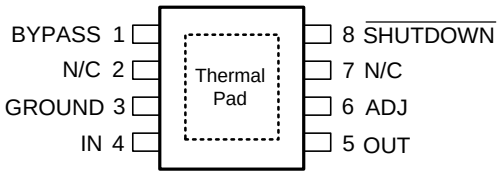

WSON (NGT) Package
8-Pin
Top View

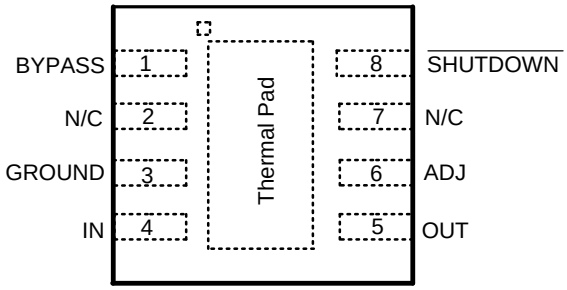

Pin Functions

PIN		I/O	DESCRIPTION
NAME	NUMBER		
ADJ	6	I	Provides feedback to error amplifier from the resistive divider that sets the output voltage.
BYPASS	1	—	The capacitor connected between BYPASS and GROUND lowers output noise voltage level and is required for loop stability.
GROUND	3	—	Device ground.
IN	4	I	Input source voltage.
N/C	2		DO NOT CONNECT. Device pin 2 is reserved for post packaging test and calibration of the LP3878-ADJ V_{ADJ} accuracy. This pin must be left floating. Do not connect to any potential. Do not connect to ground. Any attempt to do pin continuity testing on device pin 2 is discouraged. Continuity test results will be variable depending on the actions of the factory calibration. Aggressive pin continuity testing (high voltage, or high current) on device pin 2 may activate the trim circuitry forcing V_{ADJ} to move out of tolerance.
N/C	7		No internal connection.
OUT	5	O	Regulated output voltage.
$\overline{\text{SHUTDOWN}}$	8	I	Output is enabled above turnon threshold voltage. Pull down to turn off regulator output.
Thermal Pad	—	—	The exposed thermal pad on the bottom of the package should be connected to a copper thermal pad on the PCB under the package. The use of thermal vias to remove heat from the package into the PCB is recommended. Connect the thermal pad to ground potential or leave floating. Do not connect the thermal pad to any potential other than the same ground potential seen at device pin 3. For additional information on using TI's Non Pull Back WSON package, see Application Note *AN-1187*, SNOA401.

Copyright © 2005–2015, Texas Instruments Incorporated

6 Specifications

6.1 Absolute Maximum Ratings

over operating free-air temperature range (unless otherwise noted)(1)(2)

	MIN	MAX	UNIT
$\overline{\text{SHUTDOWN}}$ pin		1	kV
Power dissipation(3)	Internally Limited		
Input supply voltage (survival), V_{IN}	−0.3	16	V
ADJ pin	−0.3	6	V
Output voltage (survival), V_{OUT}(4)	−0.3	6	V
I_{OUT} (survival)	Short-Circuit Protected		
Input – output voltage (survival), $V_{IN} - V_{OUT}$(5)	−0.3	16	V
Storage temperature, T_{stg}	–65	150	°C

(1) Stresses beyond those listed under *Absolute Maximum Ratings* may cause permanent damage to the device. These are stress ratings only, which do not imply functional operation of the device at these or any other conditions beyond those indicated under *Recommended Operating Conditions*. Exposure to absolute-maximum-rated conditions for extended periods may affect device reliability.
(2) If Military- or Aerospace-specified devices are required, please contact the TI Sales Office/Distributors for availability and specifications.
(3) The maximum allowable power dissipation is a function of the maximum junction temperature, $T_{J(MAX)}$, the junction-to-ambient thermal resistance, $R_{\theta JA}$, and the ambient temperature, T_A. The maximum allowable power dissipation at any ambient temperature is calculated using: $P_{(MAX)} = (T_{J(MAX)} - T_A) / R_{\theta JA}$. The value of $R_{\theta JA}$ for the WSON (NGT) and SO PowerPAD (DDA) packages are specifically dependent on PCB trace area, trace material, and the number of layers and thermal vias. For improved thermal resistance and power dissipation for the WSON package, see Application Note AN-1187, SNOA401. Exceeding the maximum allowable power dissipation will cause excessive die temperature, and the regulator will go into thermal shutdown.
(4) If used in a dual-supply system where the regulator load is returned to a negative supply, the LP3878-ADJ output must be diode-clamped to ground.
(5) The PNP pass element contains a parasitic diode between the IN pin and the OUT pin that is normally reverse-biased. Forcing the OUT pin voltage above the IN pin voltage will turn on this diode and may induce a latch-up mode which can damage the part (see *Application and Implementation*).

6.2 ESD Ratings

			VALUE	UNIT
$V_{(ESD)}$	Electrostatic discharge	Human body model (HBM), per ANSI/ESDA/JEDEC JS-001, all pins(1)	±2000	V

(1) JEDEC document JEP155 states that 500-V HBM allows safe manufacturing with a standard ESD control process.

6.3 Recommended Operating Conditions

over operating free-air temperature range (unless otherwise noted)

		MIN	MAX	UNIT
V_{IN}	Supply input voltage	2.5	16	V
$V_{\overline{SD}}$	$\overline{\text{SHUTDOWN}}$ input voltage		V_{IN}	V
I_{OUT}	Output current		800	mA
T_J	Operating junction temperature	−40	125	°C

6.4 Thermal Information

THERMAL METRIC(1)		LP3878-ADJ		UNIT
		DDA	NGT	
		8 PINS		
$R_{\theta JA}$	Junction-to-ambient thermal resistance	42.5	38.1	°C/W
$R_{\theta JC(top)}$	Junction-to-case (top) thermal resistance	54.0	27.9	
$R_{\theta JB}$	Junction-to-board thermal resistance	26.5	15.2	
ψ_{JT}	Junction-to-top characterization parameter	8.0	0.2	
ψ_{JB}	Junction-to-board characterization parameter	26.4	15.3	
$R_{\theta JC(bot)}$	Junction-to-case (bottom) thermal resistance	3.6	4.5	

(1) For more information about traditional and new thermal metrics, see the *IC Package Thermal Metrics* application report, SPRA953.

Copyright © 2005–2015, Texas Instruments Incorporated

6.5 Electrical Characteristics

Limits are specified through design, testing, or correlation. The limits are used to calculate TI's Average Outgoing Quality Level (AOQL). Unless otherwise specified: T_J = 25°C, V_{IN} = 3 V, V_{OUT} = 1 V, I_{OUT} = 1 mA, C_{OUT} = 10 µF, C_{IN} = 4.7 µF, $V_{\overline{SD}}$ = 2 V$V_{\overline{SD}}$, C_{BYPASS} = 10 nF.

PARAMETER		TEST CONDITIONS	MIN	TYP	MAX	UNIT
V_{ADJ}	Adjust pin voltage		0.99	1.00	1.01	V
		1 mA ≤ I_{OUT} ≤ 800 mA, 3 V ≤ V_{IN} ≤ 6 V	0.98	1.00	1.02	
		1 mA ≤ I_{OUT} ≤ 800 mA, 3 V ≤ V_{IN} ≤ 6 V –40°C ≤ T_J ≤ 125°C	0.97		1.03	
$\Delta V_{OUT}/\Delta V_{IN}$	Output voltage line regulation	3 V ≤ V_{IN} ≤ 16 V		0.007	0.014	%/V
		3 V ≤ V_{IN} ≤ 16 V, –40°C ≤ T_J ≤ 125°C			0.032	
$V_{IN(MIN)}$	Minimum input voltage required to maintain output regulation	I_{OUT} = 800 mA, V_{OUT} ≥ $V_{OUT(NOM)}$ – 1%		2.5		V
		I_{OUT} = 800 mA, V_{OUT} ≥ $V_{OUT(NOM)}$ – 1% –40°C ≤ T_J ≤ 125°C			3.1	
		I_{OUT} = 800 mA, V_{OUT} ≥ $V_{OUT(NOM)}$ – 1% 0 ≤ T_J ≤ 125°C		2.5		
		I_{OUT} = 800 mA, V_{OUT} ≥ $V_{OUT(NOM)}$ – 1% 0 ≤ T_J ≤ 125°C, –40°C ≤ T_J ≤ 125°C			2.8	
		I_{OUT} = 750 mA, V_{OUT} ≥ $V_{OUT(NOM)}$ – 1%		2.5		
		I_{OUT} = 750 mA, V_{OUT} ≥ $V_{OUT(NOM)}$ – 1% –40°C ≤ T_J ≤ 125°C			3.0	
V_{DOUT}	Dropout voltage(1) V_{OUT} = 3.8 V	I_{OUT} = 100 µA		1	2	mV
		I_{OUT} = 100 µA, –40°C ≤ T_J ≤ 125°C			3	
		I_{OUT} = 200 mA		150	200	
		I_{OUT} = 200 mA, –40°C ≤ T_J ≤ 125°C			300	
		I_{OUT} = 800 mA		475	600	
		I_{OUT} = 800 mA, –40°C ≤ T_J ≤ 125°C			1100	
I_{GND}	Ground pin current	I_{OUT} = 100 µA		180	200	µA
		I_{OUT} = 100 µA, –40°C ≤ T_J ≤ 125°C			225	
		I_{OUT} = 200 mA		1.5	2	mA
		I_{OUT} = 200 mA, –40°C ≤ T_J ≤ 125°C			3.5	
		I_{OUT} = 800 mA		5.5	8.5	
		I_{OUT} = 800 mA, –40°C ≤ T_J ≤ 125°C			15	
$I_{OUT(PK)}$	Peak output current	V_{OUT} ≥ $V_{OUT(NOM)}$ − 5%		1200		mA
$I_{OUT(MAX)}$	Short-circuit current	R_L = 0 Ω (steady state)		1300		
e_n	Output noise voltage (RMS)	Bandwidth = 100 Hz to 100 kHz, C_{BYPASS} = 10 nF		18		$\mu V_{(RMS)}$
$\Delta V_{OUT}/\Delta V_{IN}$	Ripple rejection	f = 1 kHz		60		dB
I_{ADJ}	ADJ pin bias current (sourcing)	I_{OUT} = 800 mA		200		nA
$\overline{\text{SHUTDOWN}}$ Input						
$V_{\overline{SD}}$	$\overline{\text{SHUTDOWN}}$ input voltage	V_H = Output ON		1.4		V
		V_H = Output ON, –40°C ≤ T_J ≤ 125°C			1.6	
		V_L = Output OFF, I_{IN} ≤ 10 µA		0.20		
		V_L = Output OFF, I_{IN} ≤ 10 µA –40°C ≤ T_J ≤ 125°C	0.04			
		V_{OUT} ≤ 10 mV, I_{IN} ≤ 50 µA		0.6		
$I_{\overline{SD}}$	$\overline{\text{SHUTDOWN}}$ input current	$V_{\overline{SD}}$ = 0 V		0.02		µA
		$V_{\overline{SD}}$ = 0 V, –40°C ≤ T_J ≤ 125°C			−1	
		$V_{\overline{SD}}$ = 5 V		5		
		$V_{\overline{SD}}$ = 5 V, –40°C ≤ T_J ≤ 125°C			15	

(1) Dropout voltage specification applies only if V_{IN} is sufficient so that it does not limit regulator operation.

Copyright © 2005–2015, Texas Instruments Incorporated

6.6 Typical Characteristics

Unless otherwise specified: V_{IN} = 3.3 V, V_{OUT} = 1 V, I_{OUT} = 1 mA, C_{IN} = 4.7 µF, C_{OUT} = 10 µF, $V_{\overline{SD}}$ = 2 V, C_{BYP} = 10 nF, T_J = 25°C.

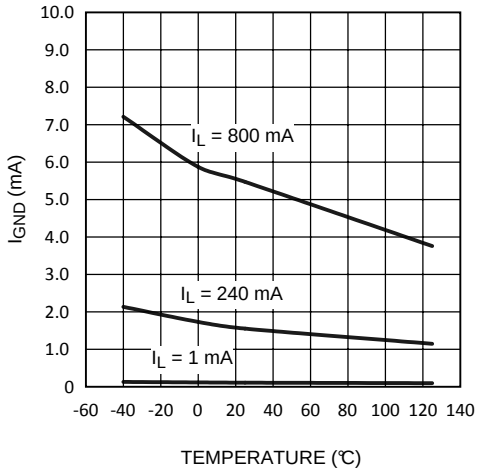

Figure 1. I_{GND} vs Temperature

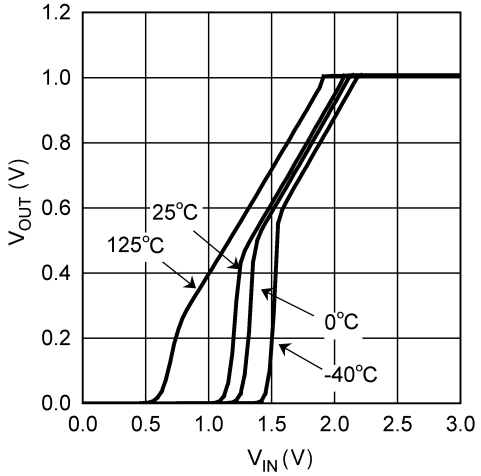

Figure 2. Minimum V_{IN} Over Temperature

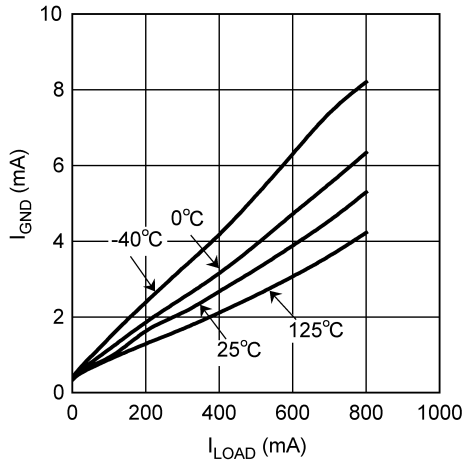

Figure 3. I_{GND} vs I_{Load}

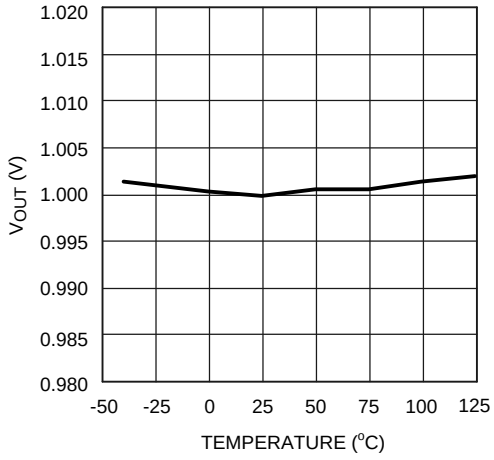

Figure 4. V_{OUT} vs Temperature

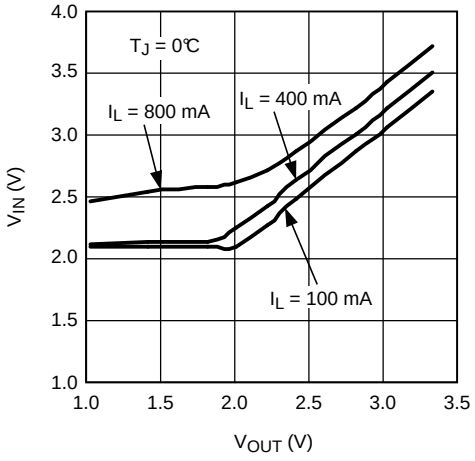

Figure 5. Minimum V_{IN} vs V_{OUT}

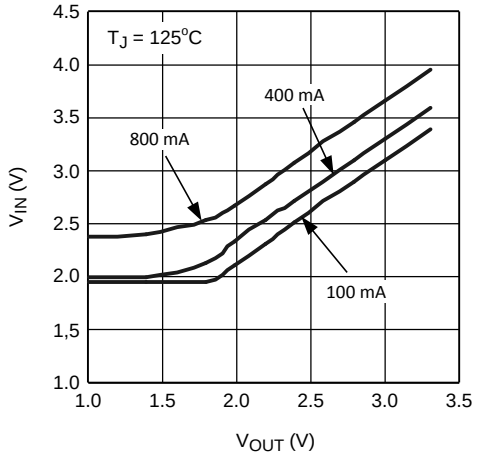

Figure 6. Minimum V_{IN} vs V_{OUT}

Copyright © 2005–2015, Texas Instruments Incorporated

Typical Characteristics (continued)

Unless otherwise specified: V_{IN} = 3.3 V, V_{OUT} = 1 V, I_{OUT} = 1 mA, C_{IN} = 4.7 µF, C_{OUT} = 10 µF, $V_{\overline{SD}}$ = 2 V, C_{BYP} = 10 nF, T_J = 25°C.

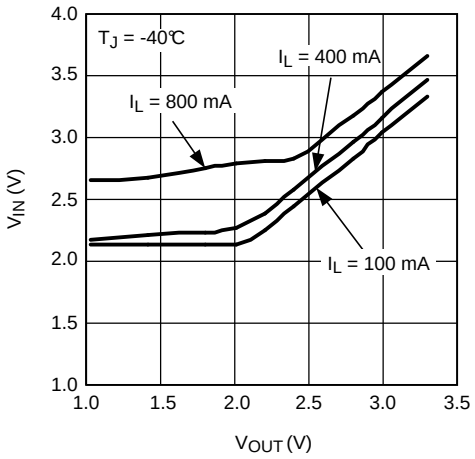

Figure 7. Minimum V_{IN} vs V_{OUT}

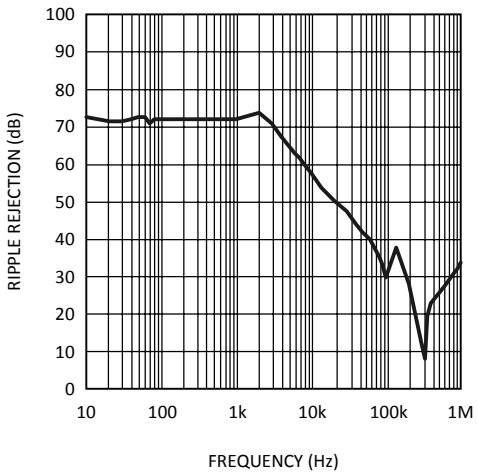

Figure 8. Ripple Rejection

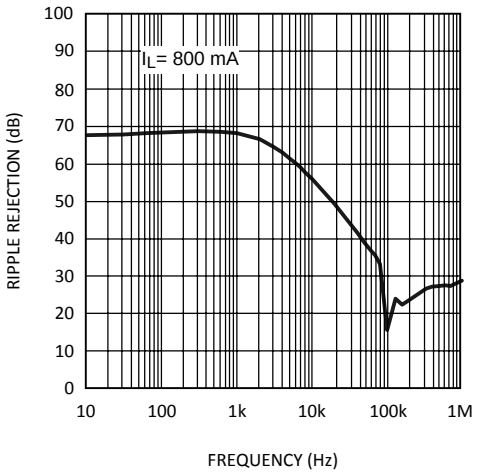

Figure 9. Ripple Rejection

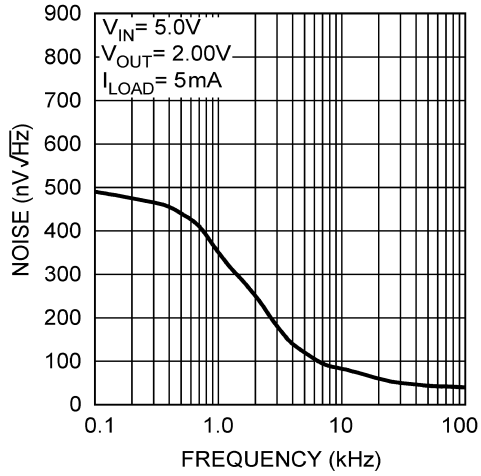

Figure 10. Output Noise Spectral Density

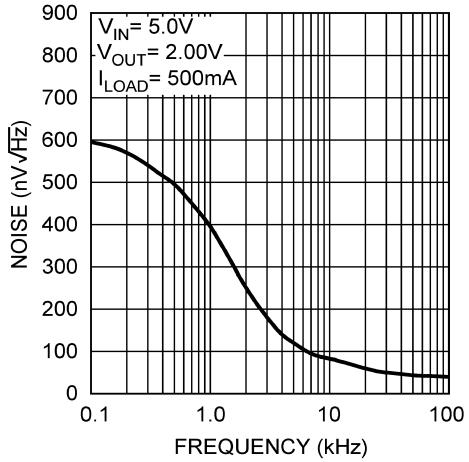

Figure 11. Output Noise Spectral Density

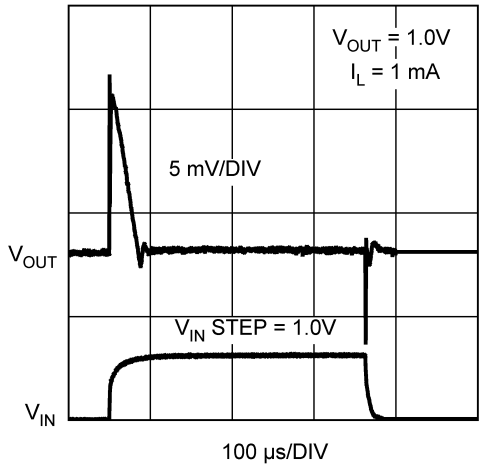

Figure 12. Line Transient Response

Copyright © 2005–2015, Texas Instruments Incorporated

Typical Characteristics (continued)

Unless otherwise specified: V_{IN} = 3.3 V, V_{OUT} = 1 V, I_{OUT} = 1 mA, C_{IN} = 4.7 µF, C_{OUT} = 10 µF, $V_{\overline{SD}}$ = 2 V, C_{BYP} = 10 nF, T_J = 25°C.

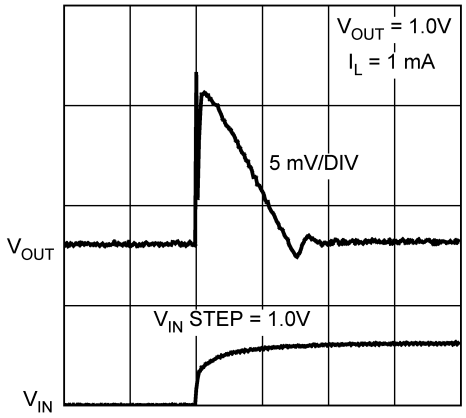

Figure 13. Line Transient Response

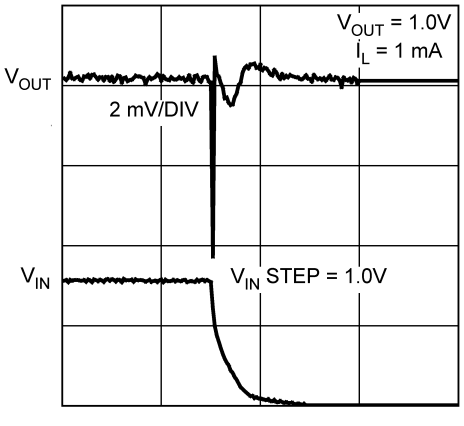

Figure 14. Line Transient Response

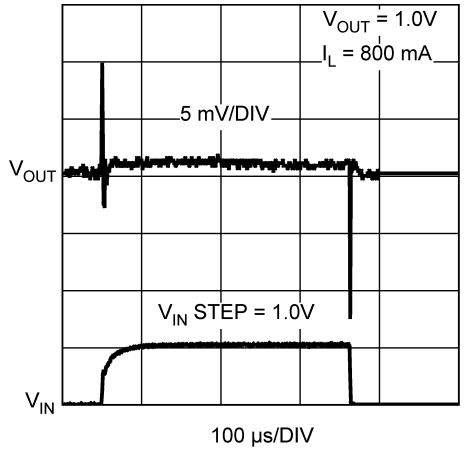

Figure 15. Line Transient Response

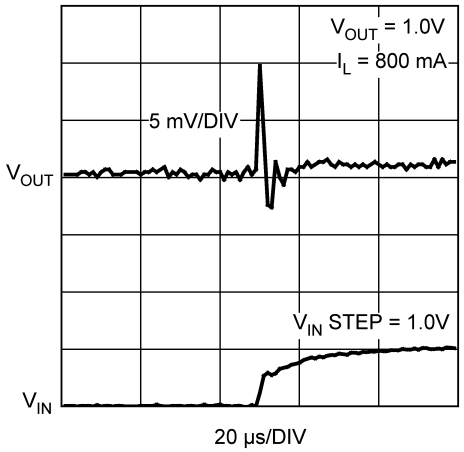

Figure 16. Line Transient Response

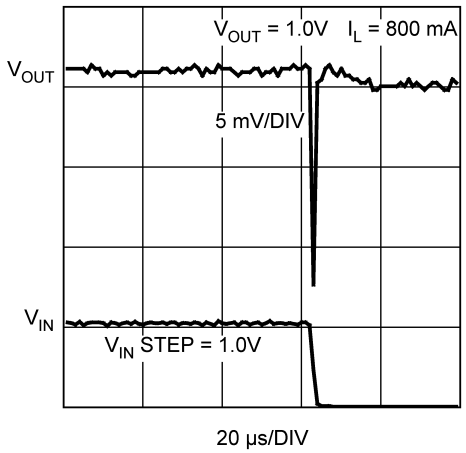

Figure 17. Line Transient Response

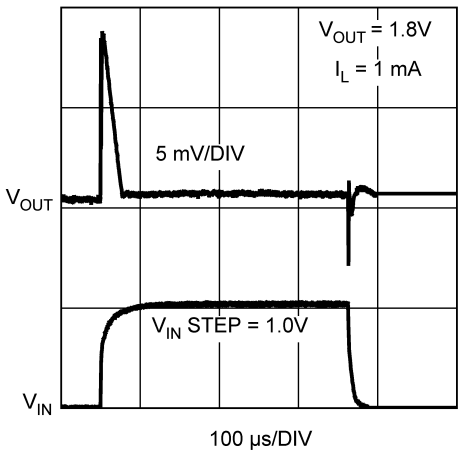

Figure 18. Line Transient Response

Copyright © 2005–2015, Texas Instruments Incorporated

Typical Characteristics (continued)

Unless otherwise specified: V_{IN} = 3.3 V, V_{OUT} = 1 V, I_{OUT} = 1 mA, C_{IN} = 4.7 µF, C_{OUT} = 10 µF, $V_{\overline{SD}}$ = 2 V, C_{BYP} = 10 nF, T_J = 25°C.

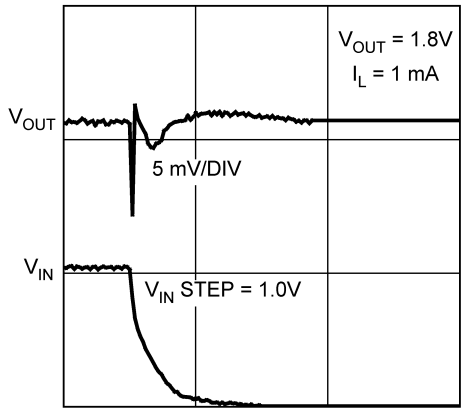

Figure 19. Line Transient Response

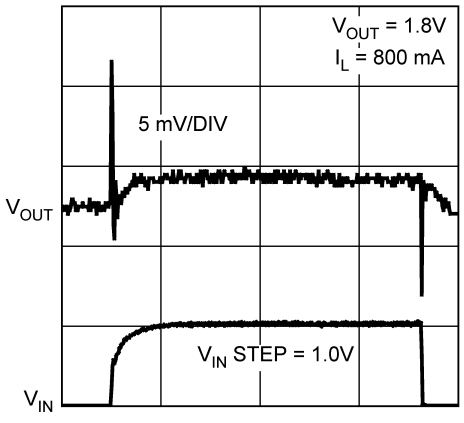

Figure 20. Line Transient Response

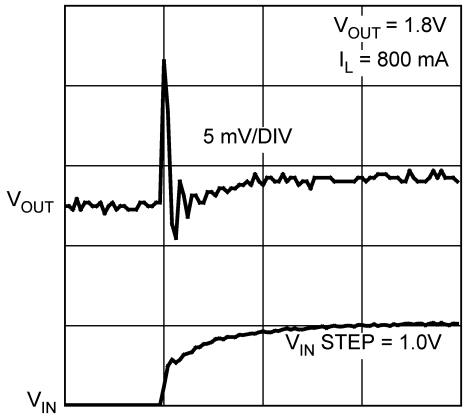

Figure 21. Line Transient Response

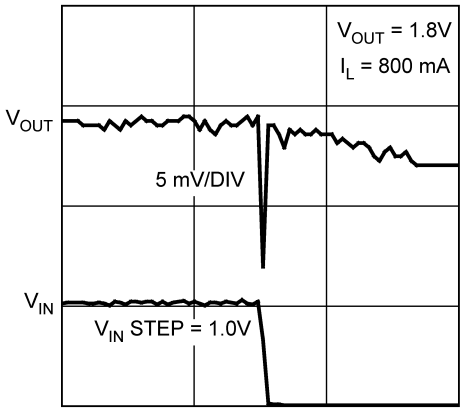

Figure 22. Line Transient Response

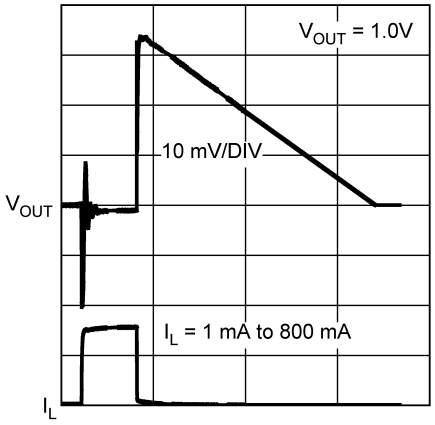

Figure 23. Load Transient Response

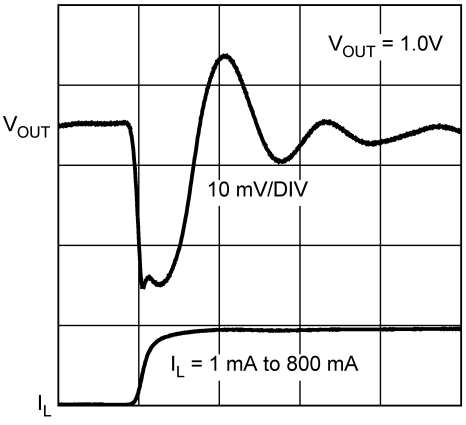

Figure 24. Load Transient Response

Typical Characteristics (continued)

Unless otherwise specified: V_{IN} = 3.3 V, V_{OUT} = 1 V, I_{OUT} = 1 mA, C_{IN} = 4.7 µF, C_{OUT} = 10 µF, $V_{\overline{SD}}$ = 2 V, C_{BYP} = 10 nF, T_J = 25°C.

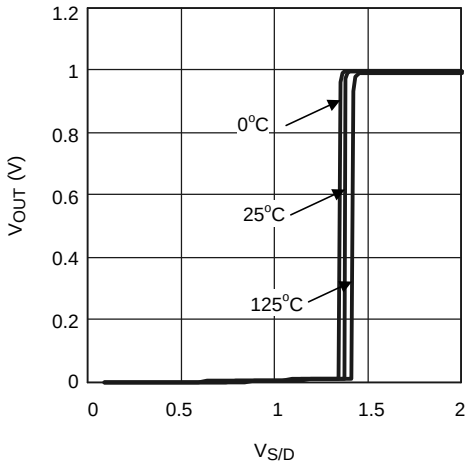

Figure 25. Turnon Characteristics

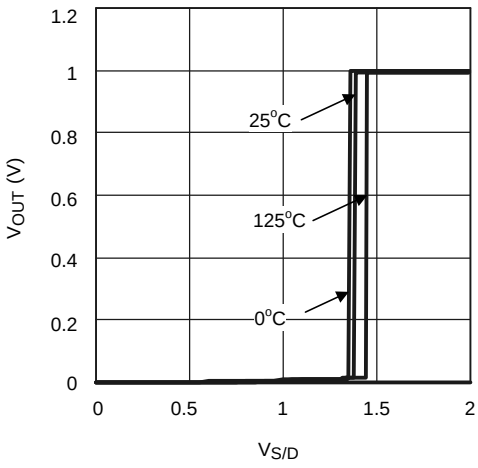

Figure 26. Turnoff Characteristics

Copyright © 2005–2015, Texas Instruments Incorporated

7 Detailed Description

7.1 Overview

The LP3878-ADJ is an adjustable regulator; the output voltage can be set from 1 V to 5.5 V. The device can deliver 800-mA continuous load current. Standard regulator features, such as overcurrent and overtemperature protection, are also included.

The LP3878-ADJ contains other features:

- Low power shutdown current and low ground pin current
- Very low output noise
- 8-lead SO PowerPAD or WSON surface-mount packages to allow for increased power dissipation.

7.2 Functional Block Diagram

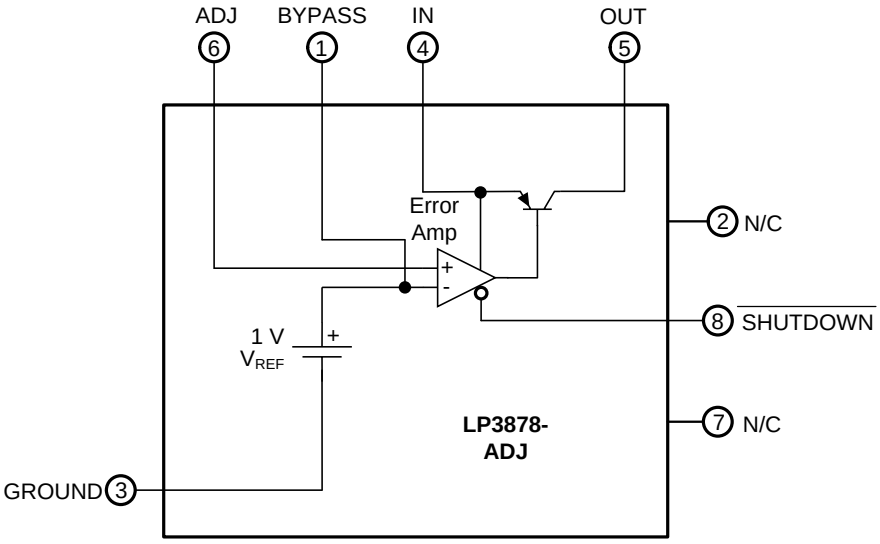

7.3 Feature Description

7.3.1 Shutdown Input Operation

The LP3878-ADJ is shut off by pulling the $\overline{\text{SHUTDOWN}}$ input low, and turned on by pulling it high. If this feature is not to be used, the $\overline{\text{SHUTDOWN}}$ input should be tied to V_{IN} to keep the regulator output on at all times.

To assure proper operation, the signal source used to drive the $\overline{\text{SHUTDOWN}}$ input must be able to swing above and below the specified turnon or turnoff voltage thresholds listed in the *Electrical Characteristics* under $V_{ON/OFF}$.

7.3.2 Reverse Input-Output Voltage

The PNP power transistor used as the pass element in the LP3878-ADJ contains a parasitic diode between the IN pin and the OUT pin. During normal operation (where the IN pin voltage is higher than the OUT pin voltage) this parasitic diode is reverse-biased. However, if the OUT pin voltage is pulled above the IN pin voltage this diode will turn ON, and current will flow into the LP3878-ADJ OUT pin.

In such cases, a parasitic SCR between the IN pin and the GND pin can latch ON which will allow a high current to flow from the VIN supply, into the IN pin to ground, which can damage the part. In any application where the OUT pin voltage may be higher than the IN pin voltage, even momentarily, an external Schottky diode must be connected from the IN pin to the OUT pin (cathode to IN pin, anode to OUT pin), to limit the reverse voltage across the LP3878-ADJ to 0.3 V (see *Absolute Maximum Ratings*).

7.3.3 Low Output Noise

With a 10-nF capacitor on the BYPASS pin, the output noise is only 18 µV.

Copyright © 2005–2015, Texas Instruments Incorporated

7.4 Device Functional Modes

7.4.1 Operation With $V_{OUT(TARGET)}$ + 2 V ≤ V_{IN} ≤ 16 V

The device operates if the input voltage is equal to, or exceeds $V_{OUT(TARGET)}$ + 2 V. At input voltages below the minimum V_{IN} requirement, the device does not operate correctly and output voltage may not reach target value.

7.4.2 Operation With $\overline{\text{SHUTDOWN}}$ Pin Control

LP3878-ADJ is turned off by pulling the $\overline{\text{SHUTDOWN}}$ pin low, and turned on by pulling it high. If this feature is not used, the $\overline{\text{SHUTDOWN}}$ pin should be tied to V_{IN} to keep the regulator output on at all times. To assure proper operation, the signal source used to drive the $\overline{\text{SHUTDOWN}}$ input must be able to swing above and below the specified turnon and turnoff voltage thresholds listed in the *Electrical Characteristics* under V_L and V_H.

Copyright © 2005–2015, Texas Instruments Incorporated

8 Application and Implementation

NOTE

Information in the following applications sections is not part of the TI component specification, and TI does not warrant its accuracy or completeness. TI's customers are responsible for determining suitability of components for their purposes. Customers should validate and test their design implementation to confirm system functionality.

8.1 Application Information

The LP3878-ADJ can provide 800-mA output current with 2.5-V to 6-V output voltage. A minimum 10-µF output capacitor is required for loop stability. An input capacitor of at least 4.7-µF is required also. The $\overline{\text{SHUTDOWN}}$ pin must be tied to input if not used. A 10-nF bypass capacitor is required to improve loop stability, it also can reduce noise on the regulator output significantly. A capacitor, C_{FF}, is required to increase phase margin and assure loop stability. Output voltage can be set by two resistors R1 and R2 (see Figure 27), and R2 must be less than 5 kΩ to ensure loop stability.

8.2 Typical Application

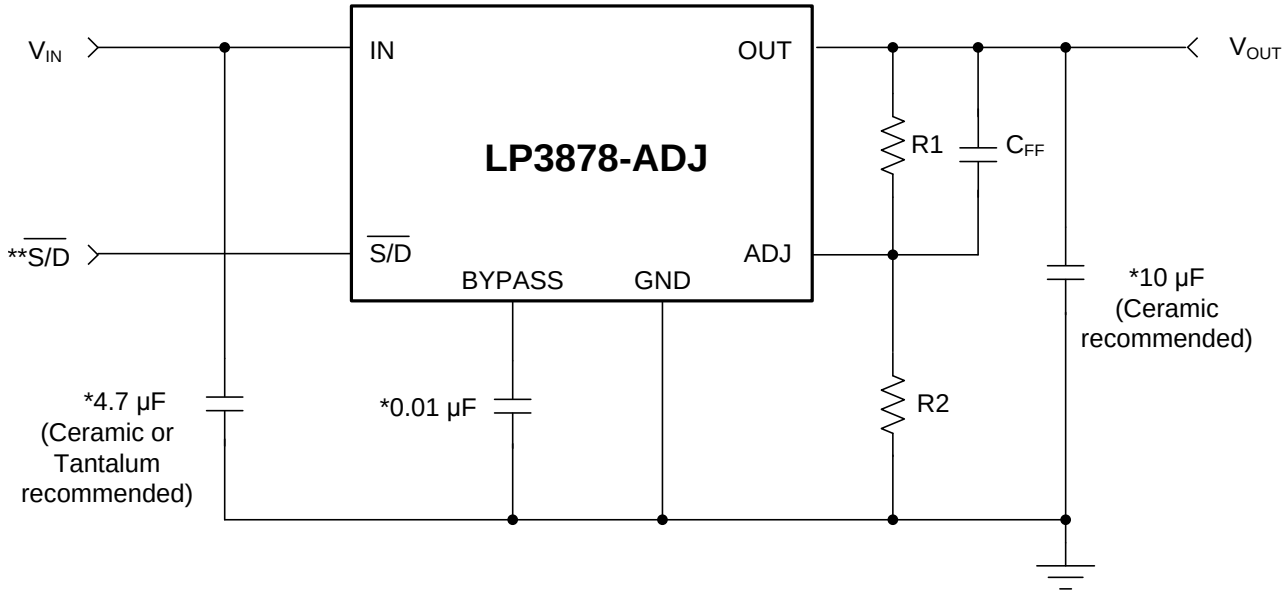

*Capacitor values shown are minimum required to assure stability. Larger output capacitor provides improved dynamic response. Output capacitor must meet ESR requirements (see *Application Information*).
**The $\overline{\text{SHUTDOWN}}$ (or $\overline{\text{S/D}}$) pin must be actively terminated (see *Device Functional Modes*). Tie to IN (pin 4) if not used.

Figure 27. Basic Application Circuit

8.2.1 Design Requirements

DESIGN PARAMETER	VALUE
Input voltage	3.8 V ±10%
Output voltage	1.8 V ±3%
Output current	800 mA (maximum)
Input capacitor	4.7 µF (minimum)
Output capacitor	10 µF (minimum)
Bypass capacitor	10 nF
External resistor R2	1 kΩ (less than 5 kΩ)

Copyright © 2005–2015, Texas Instruments Incorporated

8.2.2 Detailed Design Procedure

8.2.2.1 External Capacitors

Like any low-dropout regulator, the LP3878-ADJ requires external capacitors for regulator stability. These capacitors must be correctly selected for good performance.

8.2.2.1.1 Input Capacitor

A capacitor whose value is at least 4.7 µF (±20%) is required between the LP3878-ADJ input and ground. A good quality X5R or X7R ceramic capacitor should be used.

Capacitor tolerance and temperature variation must be considered when selecting a capacitor (see *Capacitor Characteristics*) to assure the minimum requirement of input capacitance is met over all operating conditions.

The input capacitor must be located not more than 0.5 inches from the input pin and returned to a clean analog ground. Any good quality ceramic or tantalum capacitor may be used, assuming the minimum input capacitance requirement is met.

8.2.2.1.2 Output Capacitor

The LP3878-ADJ requires a ceramic output capacitor whose size is at least 10 µF (±20%). A good quality X5R or X7R ceramic capacitor should be used. Capacitance tolerance and temperature characteristics must be considered when selecting an output capacitor.

The LP3878-ADJ is designed specifically to work with ceramic output capacitors, utilizing circuitry which allows the regulator to be stable across the entire range of output current with an ultra-low equivalent series resistance (ESR) output capacitor.

The output capacitor selected must meet the requirement for minimum amount of capacitance and also have an ESR value which is within the stable range. A curve is provided which shows the stable ESR range as a function of load current (see Figure 28).

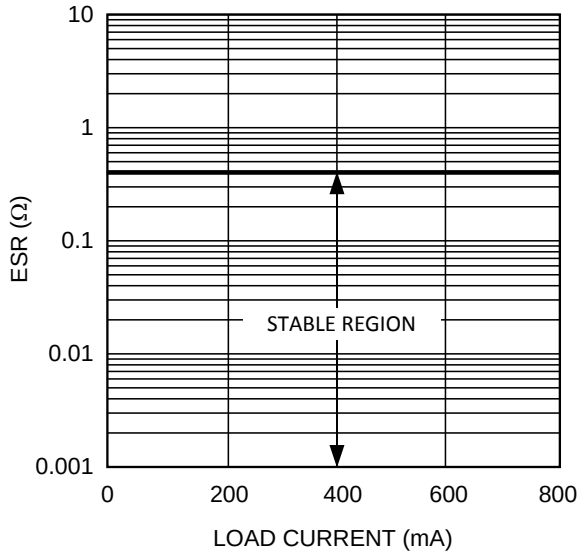

Figure 28. Stable Region for Output Capacitor ESR

Copyright © 2005–2015, Texas Instruments Incorporated

NOTE

Important: The output capacitor must maintain its ESR within the stable region over the full operating temperature range of the application to assure stability.

The output capacitor ESR forms a zero which is required to add phase lead near the loop gain crossover frequency, typically in the range of 50 kHz to 200 kHz. The ESR at lower frequencies is of no importance. Some capacitor manufacturers list ESR at low frequencies only, and some give a formula for Dissipation Factor (DF) which can be used to calculate a value for a term referred to as ESR. However, because the DF formula is usually at a much lower frequency than the range listed above, it will give an unrealistically high value. If good quality X5R or X7R ceramic capacitors are used, the actual ESR in the 50-kHz to 200-kHz range will not exceed 25 mΩ. If these are used as output capacitors for the LP3878-ADJ, the regulator stability requirements are satisfied.

It is important to remember that capacitor tolerance and variation with temperature must be taken into consideration when selecting an output capacitor so that the minimum required amount of output capacitance is provided over the full operating temperature range (see *Capacitor Characteristics*).

The output capacitor must be located not more than 0.5 inches from the OUT pin and returned to a clean analog ground.

8.2.2.1.3 Noise Bypass Capacitor

The 10-nF capacitor on the BYPASS pin significantly reduces noise on the regulator output and is required for loop stability. However, the capacitor is connected directly to a high-impedance circuit in the bandgap reference.

Because this circuit has only a few µA flowing in it, any significant loading on this node will cause a change in the regulated output voltage. For this reason, dc leakage current through the noise bypass capacitor must never exceed 100 nA, and should be kept as low as possible for best output voltage accuracy.

The types of capacitors best suited for the noise bypass capacitor are ceramic and film. High-quality ceramic capacitors with either NPO or COG dielectric typically have very low leakage. 10-nF polypropylene and polycarbonate film capacitors are available in small surface-mount packages and typically have extremely low leakage current.

While the capacitor value on the BYPASS will affect start-up time, this is not intended to be used as a soft-start circuit. There is no dedicated discharge circuitry for this capacitor, and it can be pre-biased if the IN pin, or the SHUTDOWN pin are not at 0 V at start-up.

8.2.2.2 Feedforward Capacitor

The feedforward capacitor designated C_{FF} in Figure 27 is required to increase phase margin and assure loop stability. Improved phase margin also gives better transient response to changes in load or input voltage, and faster settling time on the output voltage when transients occur. C_{FF} forms both a pole and zero in the loop gain, the zero providing beneficial phase lead (which increases phase margin) and the pole adding undesirable phase lag (which should be minimized). The zero frequency is determined both by the value of C_{FF} and R1:

$$f_Z = 1 / (2\pi C_{FF} \times R1) \quad (1)$$

The pole frequency resulting from C_{FF} is determined by the value of C_{FF} and the parallel combination of R1 and R2:

$$f_P = 1 / (2\pi C_{FF} \times (R1 // R2)) \quad (2)$$

At higher output voltages where R1 is much greater than R2, the value of R2 primarily determines the value of the parallel combination of R1 // R2. This puts the pole at a much higher frequency than the zero. As the regulated output voltage is reduced (and the value of R1 decreases), the parallel effect of R2 diminishes and the two equations become equal (at which point the pole and zero cancel out). Because the pole frequency gets closer to the zero at lower output voltages, the beneficial effects of C_{FF} are increased if the frequency range of the zero is shifted slightly higher for applications with low V_{OUT} (because then the pole adds less phase lag at the loop crossover frequency).

C_{FF} should be selected to place the pole-zero pair at a frequency where the net phase lead added to the loop at the crossover frequency is maximized. The following design guidelines were obtained from bench testing to optimize phase margin, transient response, and settling time:

- For $V_{OUT} \leq 2.5$ V: C_{FF} should be selected to set the zero frequency in the range of about 50 kHz to 200 kHz.

Copyright © 2005–2015, Texas Instruments Incorporated

- For V_{OUT} > 2.5 V: C_{FF} should be selected to set the zero frequency in the range of about 20 kHz to 100 kHz.

8.2.2.3 Capacitor Characteristics

8.2.2.3.1 Ceramic

The LP3878-ADJ was designed to work with ceramic capacitors on the output to take advantage of the benefits they offer: for capacitance values in the 10-µF range, ceramics are the least expensive and also have the lowest ESR values (which makes them best for eliminating high-frequency noise). The ESR of a typical 10-µF ceramic capacitor is in the range of 5 mΩ to 10 mΩ, which meets the ESR limits required for stability by the LP3878-ADJ.

One disadvantage of ceramic capacitors is that their capacitance can vary with temperature. Many large value ceramic capacitors (≥ 2.2 µF) are manufactured with the Z5U or Y5V temperature characteristic, which results in the capacitance dropping by more than 50% as the temperature goes from 25°C to 85°C.

Another significant problem with Z5U and Y5V dielectric devices is that the capacitance drops severely with applied voltage. A typical Z5U or Y5V capacitor can lose 60% of its rated capacitance with half of the rated voltage applied to it.

For these reasons, X7R and X5R type ceramic capacitors must be used on the input and output of the LP3878-ADJ.

8.2.2.4 Setting the Output Voltage

The output voltage is set using resistors R1 and R2 (see Figure 27).

The formula for output voltage is:

$$V_{OUT} = V_{ADJ} \times (1 + (R1 / R2)) \quad (3)$$

R2 must be less than 5 kΩ to ensure loop stability.

To prevent voltage errors, R1 and R2 must be located near the LP3878-ADJ and connected via traces with no other currents flowing in them (Kelvin connect). The bottom of the R1/R2 divider must be connected directly to the LP3878-ADJ ground pin.

8.2.3 Application Curves

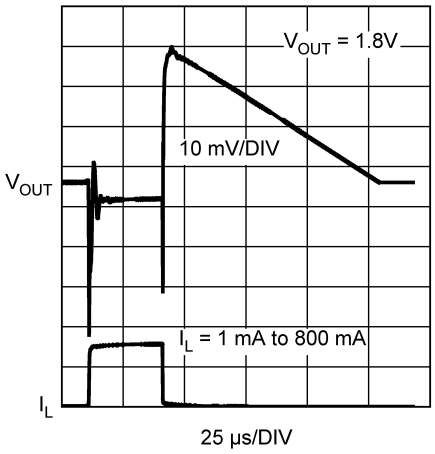

Figure 29. Load Transient Response

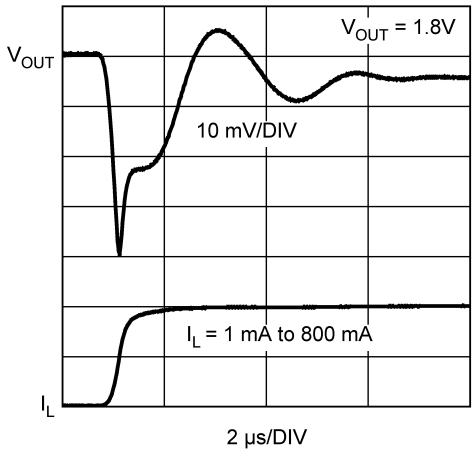

Figure 30. Load Transient Response

Copyright © 2005–2015, Texas Instruments Incorporated

9 Power Supply Recommendations

The LP3878-ADJ is designed to operate from an input voltage supply range between 2.5 V and 16 V. The input voltage range provides adequate headroom in order for the device to have a regulated output. This input supply must be well regulated. An input capacitor of at least 4.7 µF is required.

10 Layout

10.1 Layout Guidelines

Good PC layout practices must be used or instability can be induced because of ground loops and voltage drops. The input and output capacitors must be directly connected to the input, output, and ground pins of the regulator using traces which do not have other currents flowing in them (Kelvin connect).

The best way to do this is to lay out C_{IN} and C_{OUT} near the device with short traces to the IN, OUT, and ground pins. The regulator ground pin should be connected to the external circuit ground so that the regulator and its capacitors have a single point ground.

It should be noted that stability problems have been seen in applications where vias to an internal ground plane were used at the ground points of the IC and the input and output capacitors. This was caused by varying ground potentials at these nodes resulting from current flowing through the ground plane. Using a single-point ground technique for the regulator and its capacitors fixed the problem.

Because high current flows through the traces going into IN and coming from OUT, Kelvin connect the capacitor leads to these pins so there is no voltage drop in series with the input and output capacitors.

10.2 Layout Example

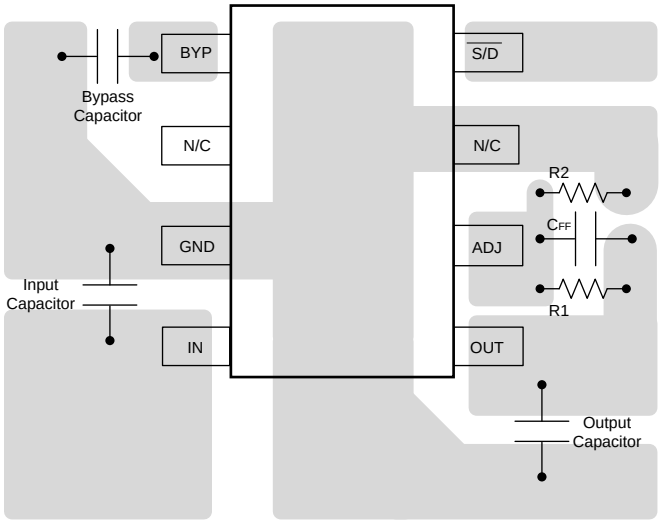

10.3 Power Dissipation

The LP3878-ADJ is offered in the 8-lead SO PowerPAD or WSON surface-mount packages to allow for increased power dissipation compared to the SO-8 and Mini SO-8. For details on thermal performance as well as mounting and soldering specifications, refer to Application Note *AN-1187*, SNOA401.

Copyright © 2005–2015, Texas Instruments Incorporated

11 Device and Documentation Support

11.1 Documentation Support

11.1.1 Related Documentation

For related documentation see the following:

Application Note *AN-1187*, SNOA401

11.2 Trademarks

PowerPAD is a trademark of Texas Instruments.

11.3 Electrostatic Discharge Caution



These devices have limited built-in ESD protection. The leads should be shorted together or the device placed in conductive foam during storage or handling to prevent electrostatic damage to the MOS gates.

11.4 Glossary

SLYZ022 — *TI Glossary*.

This glossary lists and explains terms, acronyms, and definitions.

12 Mechanical, Packaging, and Orderable Information

The following pages include mechanical, packaging, and orderable information. This information is the most current data available for the designated devices. This data is subject to change without notice and revision of this document. For browser-based versions of this data sheet, refer to the left-hand navigation.

Copyright © 2005–2015, Texas Instruments Incorporated

PACKAGING INFORMATION

Orderable part number	Status (1)	Material type (2)	Package | Pins	Package qty | Carrier	RoHS (3)	Lead finish/ Ball material (4)	MSL rating/ Peak reflow (5)	Op temp (°C)	Part marking (6)
LP3878MR-ADJ/NOPB	Active	Production	SO PowerPAD (DDA) | 8	95 | TUBE	Yes	SN	Level-3-260C-168 HR	-40 to 125	3878 MRADJ
LP3878MR-ADJ/NOPB.A	Active	Production	SO PowerPAD (DDA) | 8	95 | TUBE	Yes	SN	Level-3-260C-168 HR	-40 to 125	3878 MRADJ
LP3878MR-ADJ/NOPB.B	Active	Production	SO PowerPAD (DDA) | 8	95 | TUBE	Yes	SN	Level-3-260C-168 HR	-40 to 125	3878 MRADJ
LP3878MRX-ADJ/NOPB	Active	Production	SO PowerPAD (DDA) | 8	2500 | LARGE T&R	Yes	SN	Level-3-260C-168 HR	-40 to 125	3878 MRADJ
LP3878MRX-ADJ/NOPB.A	Active	Production	SO PowerPAD (DDA) | 8	2500 | LARGE T&R	Yes	SN	Level-3-260C-168 HR	-40 to 125	3878 MRADJ
LP3878MRX-ADJ/NOPB.B	Active	Production	SO PowerPAD (DDA) | 8	2500 | LARGE T&R	Yes	SN	Level-3-260C-168 HR	-40 to 125	3878 MRADJ
LP3878SD-ADJ/NOPB	Active	Production	WSON (NGT) | 8	1000 | SMALL T&R	Yes	NIPDAU | SN	Level-1-260C-UNLIM	-40 to 125	3878ADJ
LP3878SD-ADJ/NOPB.A	Active	Production	WSON (NGT) | 8	1000 | SMALL T&R	Yes	SN	Level-1-260C-UNLIM	-40 to 125	3878ADJ
LP3878SD-ADJ/NOPB.B	Active	Production	WSON (NGT) | 8	1000 | SMALL T&R	Yes	SN	Level-1-260C-UNLIM	-40 to 125	3878ADJ
LP3878SDX-ADJ/NOPB	Active	Production	WSON (NGT) | 8	4500 | LARGE T&R	Yes	NIPDAU | SN	Level-1-260C-UNLIM	-40 to 125	3878ADJ
LP3878SDX-ADJ/NOPB.A	Active	Production	WSON (NGT) | 8	4500 | LARGE T&R	Yes	SN	Level-1-260C-UNLIM	-40 to 125	3878ADJ
LP3878SDX-ADJ/NOPB.B	Active	Production	WSON (NGT) | 8	4500 | LARGE T&R	Yes	SN	Level-1-260C-UNLIM	-40 to 125	3878ADJ

(1) **Status:** For more details on status, see our product life cycle.

(2) **Material type:** When designated, preproduction parts are prototypes/experimental devices, and are not yet approved or released for full production. Testing and final process, including without limitation quality assurance, reliability performance testing, and/or process qualification, may not yet be complete, and this item is subject to further changes or possible discontinuation. If available for ordering, purchases will be subject to an additional waiver at checkout, and are intended for early internal evaluation purposes only. These items are sold without warranties of any kind.

(3) **RoHS values:** Yes, No, RoHS Exempt. See the TI RoHS Statement for additional information and value definition.

(4) **Lead finish/Ball material:** Parts may have multiple material finish options. Finish options are separated by a vertical ruled line. Lead finish/Ball material values may wrap to two lines if the finish value exceeds the maximum column width.

(5) **MSL rating/Peak reflow:** The moisture sensitivity level ratings and peak solder (reflow) temperatures. In the event that a part has multiple moisture sensitivity ratings, only the lowest level per JEDEC standards is shown. Refer to the shipping label for the actual reflow temperature that will be used to mount the part to the printed circuit board.

(6) **Part marking:** There may be an additional marking, which relates to the logo, the lot trace code information, or the environmental category of the part.

Multiple part markings will be inside parentheses. Only one part marking contained in parentheses and separated by a "~" will appear on a part. If a line is indented then it is a continuation of the previous line and the two combined represent the entire part marking for that device.

Important Information and Disclaimer: The information provided on this page represents TI's knowledge and belief as of the date that it is provided. TI bases its knowledge and belief on information provided by third parties, and makes no representation or warranty as to the accuracy of such information. Efforts are underway to better integrate information from third parties. TI has taken and continues to take reasonable steps to provide representative and accurate information but may not have conducted destructive testing or chemical analysis on incoming materials and chemicals. TI and TI suppliers consider certain information to be proprietary, and thus CAS numbers and other limited information may not be available for release.

In no event shall TI's liability arising out of such information exceed the total purchase price of the TI part(s) at issue in this document sold by TI to Customer on an annual basis.

TAPE AND REEL INFORMATION

REEL DIMENSIONS

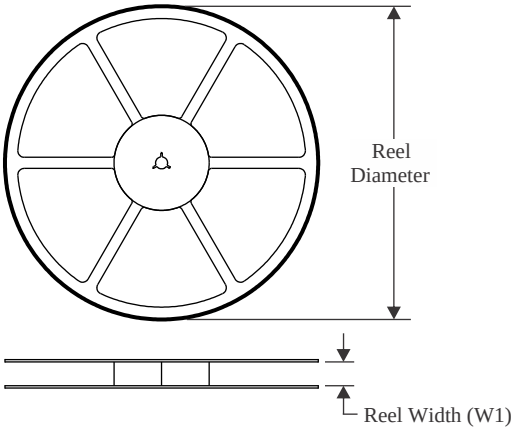

TAPE DIMENSIONS

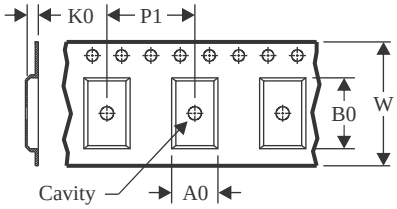

A0	Dimension designed to accommodate the component width
B0	Dimension designed to accommodate the component length
K0	Dimension designed to accommodate the component thickness
W	Overall width of the carrier tape
P1	Pitch between successive cavity centers

QUADRANT ASSIGNMENTS FOR PIN 1 ORIENTATION IN TAPE

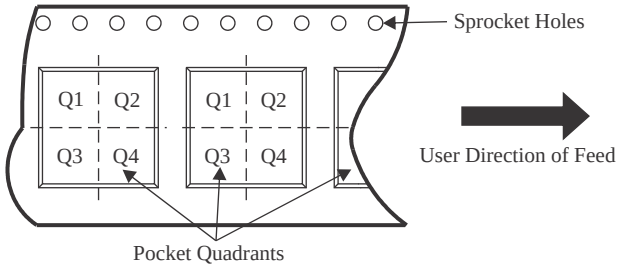

*All dimensions are nominal

Device	Package Type	Package Drawing	Pins	SPQ	Reel Diameter (mm)	Reel Width W1 (mm)	A0 (mm)	B0 (mm)	K0 (mm)	P1 (mm)	W (mm)	Pin1 Quadrant
LP3878MRX-ADJ/NOPB	SO PowerPAD	DDA	8	2500	330.0	12.4	6.5	5.4	2.0	8.0	12.0	Q1
LP3878SD-ADJ/NOPB	WSON	NGT	8	1000	177.8	12.4	4.3	4.3	1.3	8.0	12.0	Q1
LP3878SD-ADJ/NOPB	WSON	NGT	8	1000	180.0	12.4	4.3	4.3	1.1	8.0	12.0	Q1
LP3878SDX-ADJ/NOPB	WSON	NGT	8	4500	330.0	12.4	4.3	4.3	1.3	8.0	12.0	Q1
LP3878SDX-ADJ/NOPB	WSON	NGT	8	4500	330.0	12.4	4.3	4.3	1.1	8.0	12.0	Q1

TAPE AND REEL BOX DIMENSIONS

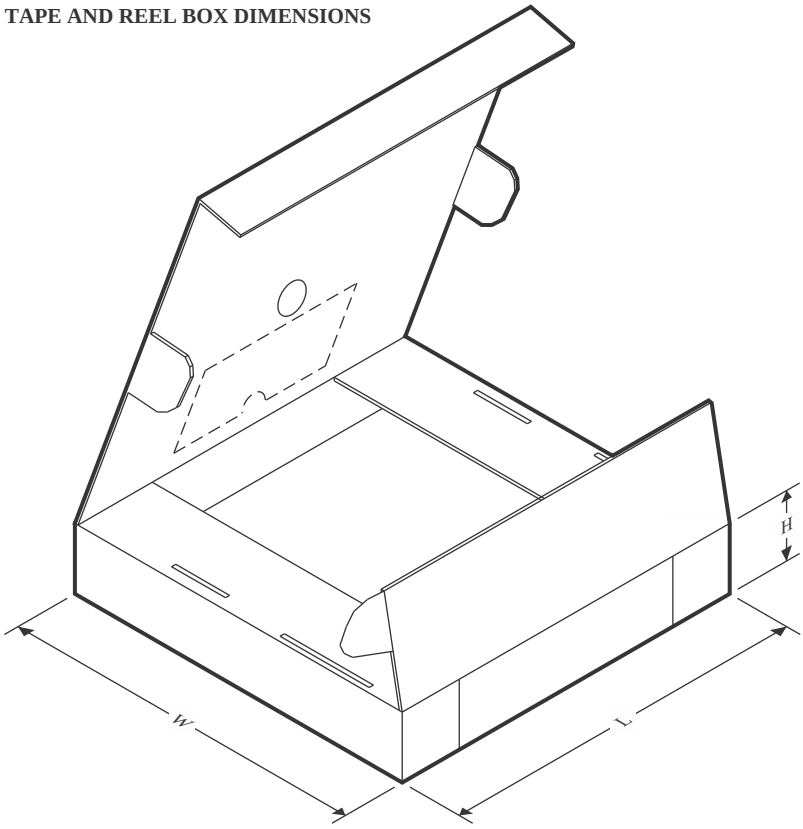

*All dimensions are nominal

Device	Package Type	Package Drawing	Pins	SPQ	Length (mm)	Width (mm)	Height (mm)
LP3878MRX-ADJ/NOPB	SO PowerPAD	DDA	8	2500	356.0	356.0	36.0
LP3878SD-ADJ/NOPB	WSON	NGT	8	1000	208.0	191.0	35.0
LP3878SD-ADJ/NOPB	WSON	NGT	8	1000	200.0	183.0	25.0
LP3878SDX-ADJ/NOPB	WSON	NGT	8	4500	367.0	367.0	35.0
LP3878SDX-ADJ/NOPB	WSON	NGT	8	4500	346.0	346.0	35.0

TUBE

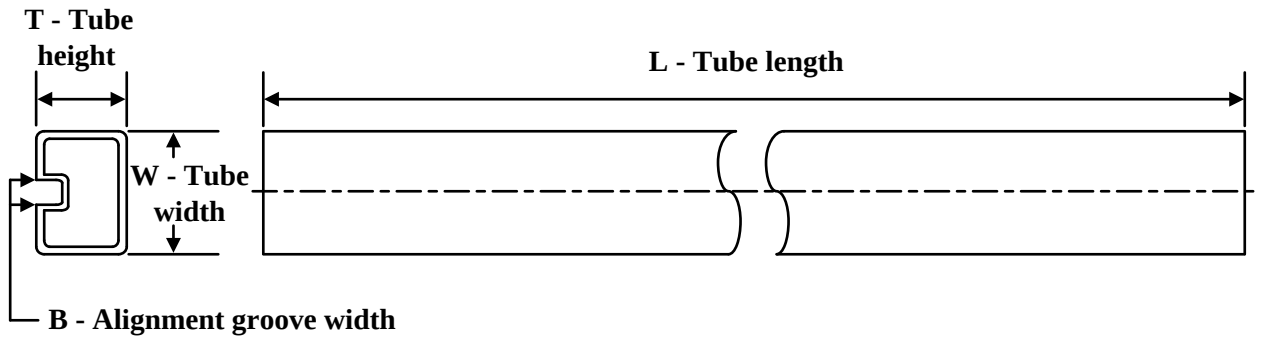

*All dimensions are nominal

Device	Package Name	Package Type	Pins	SPQ	L (mm)	W (mm)	T (µm)	B (mm)
LP3878MR-ADJ/NOPB	DDA	HSOIC	8	95	495	8	4064	3.05
LP3878MR-ADJ/NOPB.A	DDA	HSOIC	8	95	495	8	4064	3.05
LP3878MR-ADJ/NOPB.B	DDA	HSOIC	8	95	495	8	4064	3.05

PACKAGE OUTLINE

DDA0008B

PowerPAD™ SOIC - 1.7 mm max height

PLASTIC SMALL OUTLINE

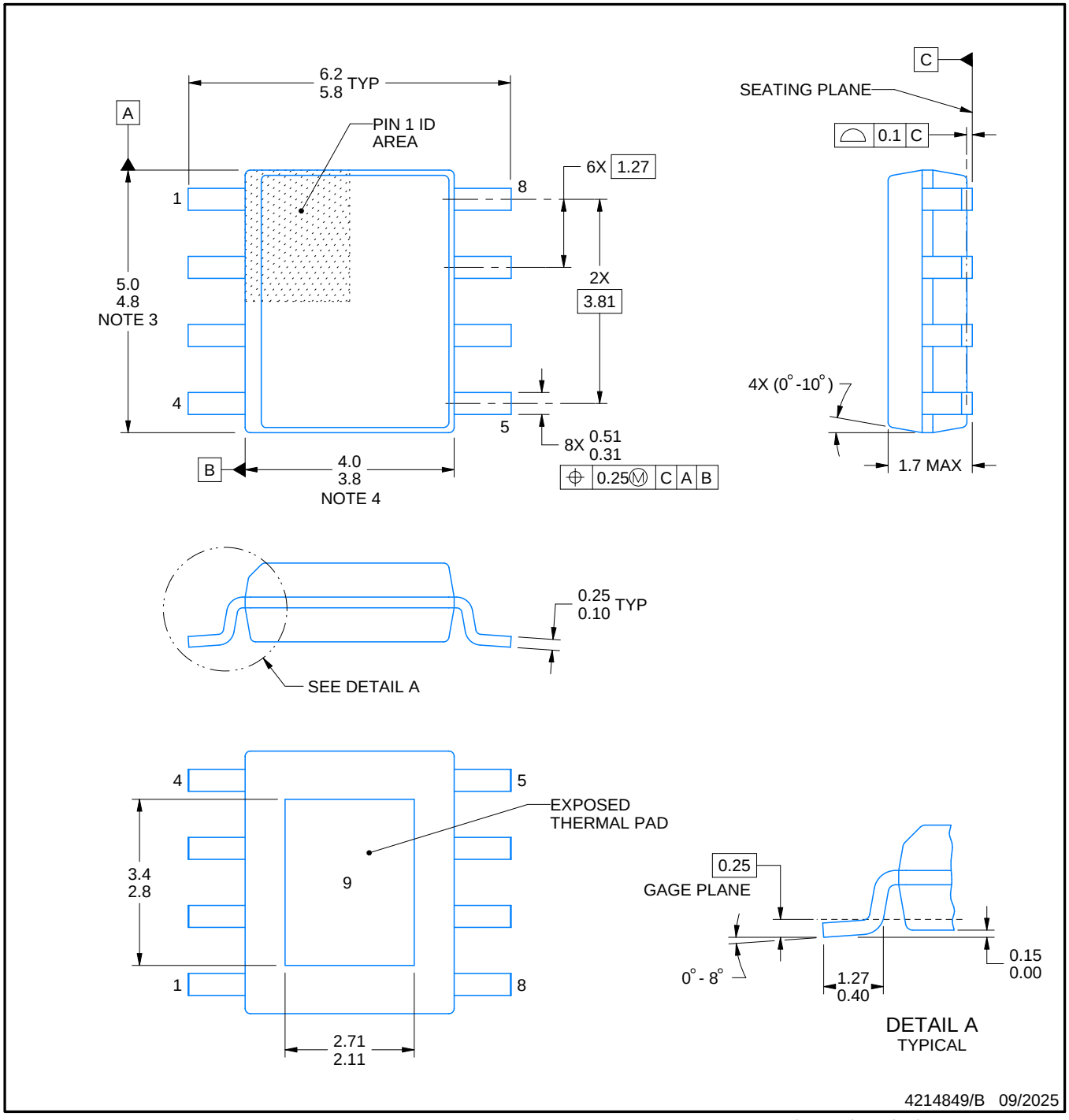

PowerPAD is a trademark of Texas Instruments.

NOTES:

1. All linear dimensions are in millimeters. Any dimensions in parenthesis are for reference only. Dimensioning and tolerancing per ASME Y14.5M.
2. This drawing is subject to change without notice.
3. This dimension does not include mold flash, protrusions, or gate burrs. Mold flash, protrusions, or gate burrs shall not exceed 0.15 mm per side.
4. This dimension does not include interlead flash. Interlead flash shall not exceed 0.25 mm per side.
5. Reference JEDEC registration MS-012.

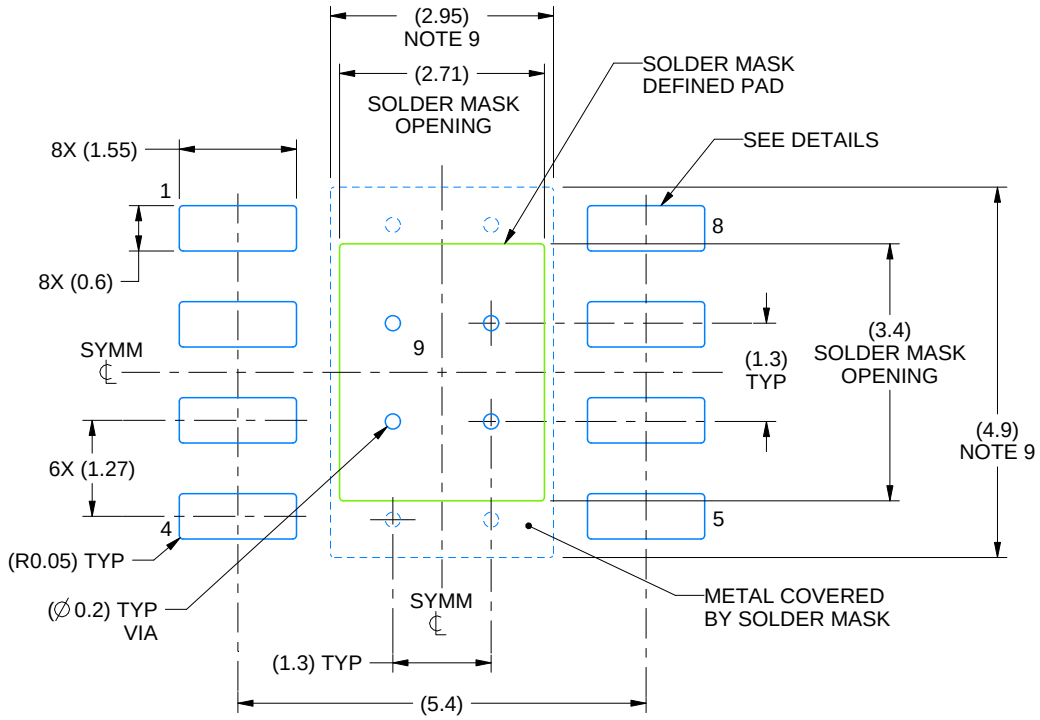

LAND PATTERN EXAMPLE
SCALE:10X

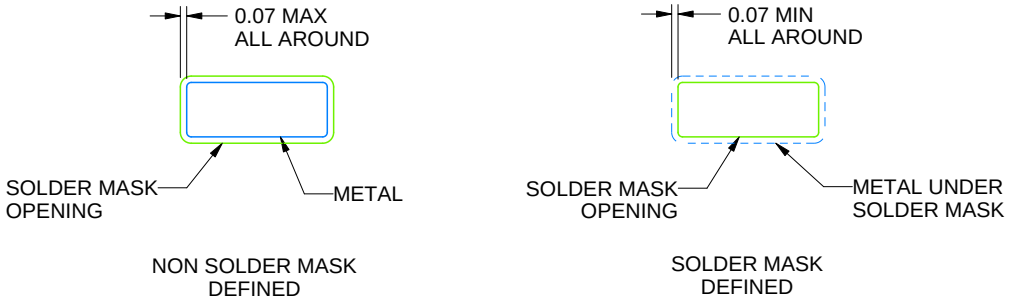

SOLDER MASK DETAILS
PADS 1-8

4214849/B 09/2025

NOTES: (continued)

6. Publication IPC-7351 may have alternate designs.
7. Solder mask tolerances between and around signal pads can vary based on board fabrication site.
8. This package is designed to be soldered to a thermal pad on the board. For more information, see Texas Instruments literature numbers SLMA002 (www.ti.com/lit/slma002) and SLMA004 (www.ti.com/lit/slma004).
9. Size of metal pad may vary due to creepage requirement.
10. Vias are optional depending on application, refer to device data sheet. If any vias are implemented, refer to their locations shown on this view. It is recommended that vias under paste be filled, plugged or tented.

EXAMPLE STENCIL DESIGN

DDA0008B

PowerPAD™ SOIC - 1.7 mm max height

PLASTIC SMALL OUTLINE

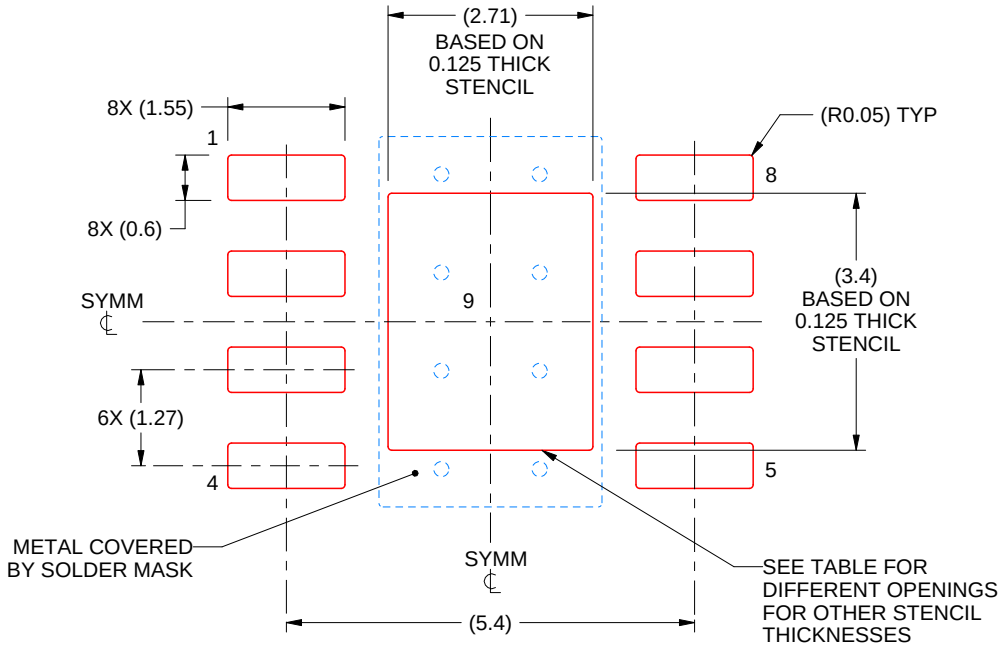

SOLDER PASTE EXAMPLE
EXPOSED PAD
100% PRINTED SOLDER COVERAGE BY AREA
SCALE:10X

STENCIL THICKNESS	SOLDER STENCIL OPENING
0.1	3.03 X 3.80
0.125	2.71 X 3.40 (SHOWN)
0.150	2.47 X 3.10
0.175	2.29 X 2.87

4214849/B 09/2025

NOTES: (continued)

11. Laser cutting apertures with trapezoidal walls and rounded corners may offer better paste release. IPC-7525 may have alternate design recommendations.
12. Board assembly site may have different recommendations for stencil design.

PACKAGE OUTLINE

NGT0008A

WSON - 0.8 mm max height

PLASTIC SMALL OUTLINE - NO LEAD

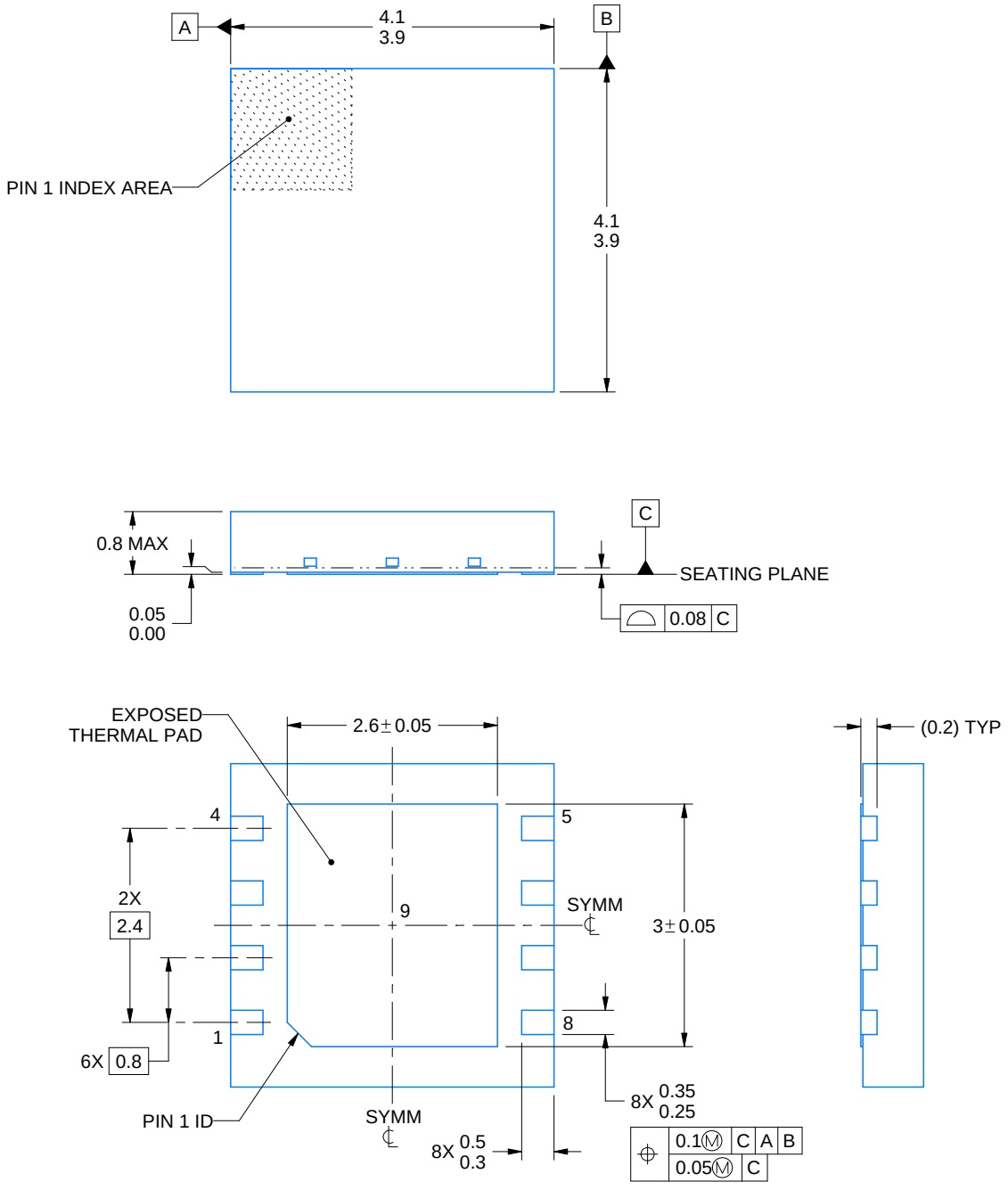

NOTES:

1. All linear dimensions are in millimeters. Any dimensions in parenthesis are for reference only. Dimensioning and tolerancing per ASME Y14.5M.
2. This drawing is subject to change without notice.
3. The package thermal pad must be soldered to the printed circuit board for thermal and mechanical performance.

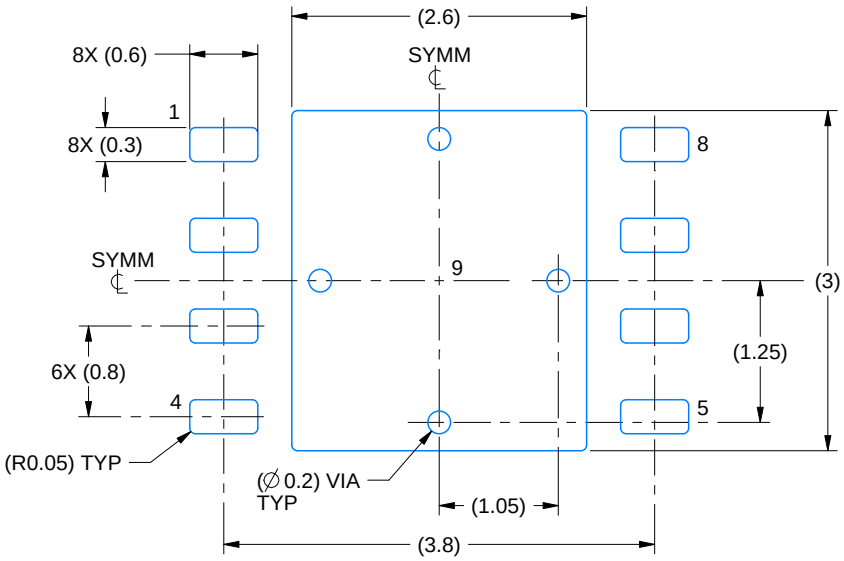

LAND PATTERN EXAMPLE
EXPOSED METAL SHOWN
SCALE:15X

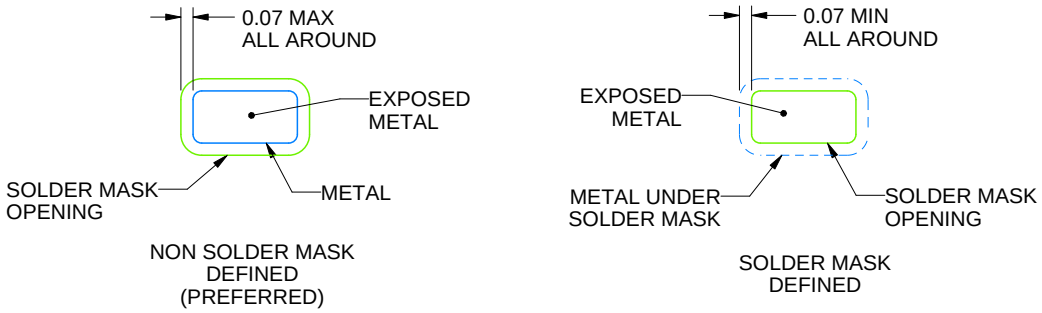

SOLDER MASK DETAILS

4214935/A 08/2020

NOTES: (continued)

4. This package is designed to be soldered to a thermal pad on the board. For more information, see Texas Instruments literature number SLUA271 (www.ti.com/lit/slua271).
5. Vias are optional depending on application, refer to device data sheet. If any vias are implemented, refer to their locations shown on this view. It is recommended that vias under paste be filled, plugged or tented.

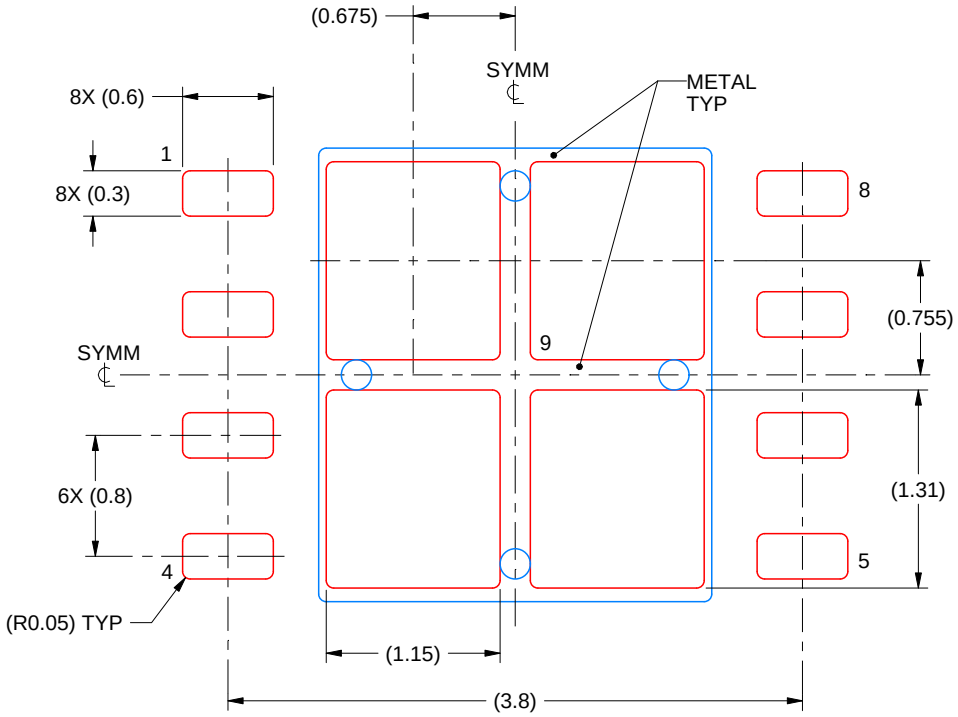

SOLDER PASTE EXAMPLE
BASED ON 0.125 mm THICK STENCIL

EXPOSED PAD 9:
77% PRINTED SOLDER COVERAGE BY AREA UNDER PACKAGE
SCALE:20X

4214935/A 08/2020

NOTES: (continued)

6. Laser cutting apertures with trapezoidal walls and rounded corners may offer better paste release. IPC-7525 may have alternate design recommendations.

IMPORTANT NOTICE AND DISCLAIMER

TI PROVIDES TECHNICAL AND RELIABILITY DATA (INCLUDING DATASHEETS), DESIGN RESOURCES (INCLUDING REFERENCE DESIGNS), APPLICATION OR OTHER DESIGN ADVICE, WEB TOOLS, SAFETY INFORMATION, AND OTHER RESOURCES “AS IS” AND WITH ALL FAULTS, AND DISCLAIMS ALL WARRANTIES, EXPRESS AND IMPLIED, INCLUDING WITHOUT LIMITATION ANY IMPLIED WARRANTIES OF MERCHANTABILITY, FITNESS FOR A PARTICULAR PURPOSE OR NON-INFRINGEMENT OF THIRD PARTY INTELLECTUAL PROPERTY RIGHTS.

These resources are intended for skilled developers designing with TI products. You are solely responsible for (1) selecting the appropriate TI products for your application, (2) designing, validating and testing your application, and (3) ensuring your application meets applicable standards, and any other safety, security, regulatory or other requirements.

These resources are subject to change without notice. TI grants you permission to use these resources only for development of an application that uses the TI products described in the resource. Other reproduction and display of these resources is prohibited. No license is granted to any other TI intellectual property right or to any third party intellectual property right. TI disclaims responsibility for, and you fully indemnify TI and its representatives against any claims, damages, costs, losses, and liabilities arising out of your use of these resources.

TI’s products are provided subject to TI’s Terms of Sale, TI’s General Quality Guidelines, or other applicable terms available either on ti.com or provided in conjunction with such TI products. TI’s provision of these resources does not expand or otherwise alter TI’s applicable warranties or warranty disclaimers for TI products. Unless TI explicitly designates a product as custom or customer-specified, TI products are standard, catalog, general purpose devices.

TI objects to and rejects any additional or different terms you may propose.

Copyright © 2026, Texas Instruments Incorporated

Last updated 10/2025

ENTEGRECİ

Bu belge www.entegreci.com üzerinden sunulmaktadır.

Elektronik komponent tedarikinde Entegreci

Entegreci, Eskişehir merkezli, Türkiye geneline satış yapan bir elektronik komponent mağazasıdır. Entegreler (IC), mikrodenetleyiciler, transistörler, diyotlar, pasif elemanlar, konnektörler, modüller ve geliştirme kartları tek adetten seri üretim adetlerine kadar satılır. Ürün sayfalarında güncel stok durumunu, fiyatı ve datasheet bağlantısını bulabilirsiniz.

Parça koduyla arama

Üretici parça numarasını yazın; stok ve fiyatı hemen görün.

www.entegreci.com

Ürün kategorileri

Entegreden kapasitöre tüm elektronik komponent kategorileri.

Kategorilere göz atın

Üreticiler

Aradığınız üreticinin ürünlerini tek sayfada inceleyin.

Üreticileri görün

Toplu alım ve teklif

Listede olmayan ya da yüksek adetli parçalar için teklif isteyin.

Teklif isteyin

www.entegreci.com | **destek@entegreci.com** | **0850 305 90 34**

Entegreci is an online electronic components store based in Türkiye. Search by manufacturer part number to see stock, prices and datasheets for integrated circuits, microcontrollers, transistors, passive components and connectors, or request a quote for parts that are not listed.

Bu sayfa Entegreci tarafından eklenmiştir. Belgenin önceki sayfaları asıl yayıncısına aittir ve içeriği değiştirilmemiştir; en güncel sürüm için belgenin yayıncısına başvurun.