MIC2950*/2951

150mA Low-Dropout Voltage Regulator

General Description

The MIC2950 and MIC2951 are “bulletproof” micropower voltage regulators with very low dropout voltage (typically 40mV at light loads and 250mV at 100mA), and very low quiescent current. Like their predecessors, the LP2950 and LP2951, the quiescent current of the MIC2950/MIC2951 increases only slightly in dropout, thus pro-longing battery life. The MIC2950/MIC2951 are pin for pin compatible with the LP2950/LP2951, but offer lower dropout, lower quiescent current, reverse battery, and automotive load dump protection.

The key additional features and protection offered include higher output current (150mA), positive transient protection for up to 60V (load dump), and the ability to survive an unregulated input voltage transient of –20V below ground (reverse battery).

The plastic DIP and SOIC versions offer additional system functions such as programmable output voltage and logic controlled shutdown. The 3-pin TO-92 MIC2950 is pin-compatible with the older 5V regulators.

These system functions also include an error flag output that warns of a low output voltage, which is often due to failing batteries on the input. This may also be used as a power-on reset. A logic-compatible shutdown input is also available which enables the regulator to be switched on and off. This part may also be pin-strapped for a 5 V output, or programmed from 1.24 V to 29 V with the use of two external resistors.

Data sheets and support documentation can be found on Micrel’s web site at: www.micrel.com.

Features

- High accuracy 3.3, 4.85, or 5V, guaranteed 150mA output
- Extremely low quiescent current
- Low-dropout voltage
- Extremely tight load and line regulation
- Very low temperature coefficient
- Use as regulator or reference
- Needs only 1.5µF for stability
- Current and thermal limiting
- Unregulated DC input can withstand –20V reverse battery and +60V positive transients

MIC2951 Version Only

- Error flag warns of output dropout
- Logic-controlled electronic shutdown
- Output programmable from 1.24 to 29V

Applications

- Automotive electronics
- Voltage reference
- Avionics
- Cellular telephones
- Battery powered equipment
- SMPS post-regulator
- High efficiency linear power supplies

Block Diagram

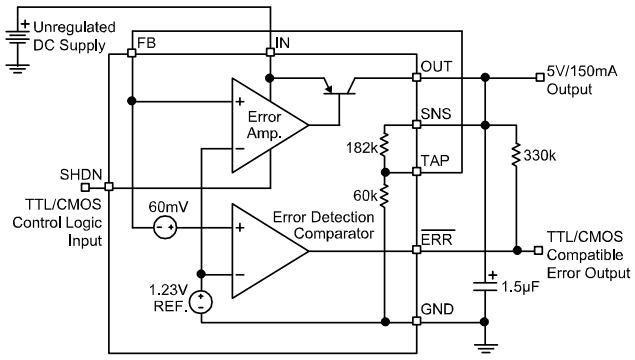

* MIC2950 Discontinuance September 2007.

MM8 is a registered trademark of Micrel, Inc.

Micrel Inc. • 2180 Fortune Drive • San Jose, CA 95131 • USA • tel +1 (408) 944-0800 • fax + 1 (408) 474-1000 • http://www.micrel.com

The MIC2950 is available as either an -05 or -06 version. The -05 and -06 versions are guaranteed for junction temperatures from –40°C to +125°C; the -05 version has a tighter output and reference voltage specification range over temperature. The MIC2951 is available as an -02 or -03 version.

The MIC2950 and MIC2951 have a tight initial tolerance (0.5% typical), a very low output voltage temperature coefficient which allows use as a low-power voltage reference, and extremely good load and line regulation (0.04% typical). This greatly reduces the error in the overall circuit, and is the result of careful design techniques and process control.

Ordering Information

Part Number	Voltage	Accuracy	Junction Temperature Range	Package	Lead Finish
MIC2950-05BZ*	5.0V	0.5%	–40° to +125°C	3-Pin TO-92	Standard
MIC2950-06BZ*	5.0V	1.0%	–40° to +125°C	3-Pin TO-92	Standard
MIC2951-02BM	5.0V	0.5%	–40° to +125°C	8-Pin SOIC	Standard
MIC2951-03BM	5.0V	1.0%	–40° to +125°C	8-Pin SOIC	Standard
MIC2951-02BN**	5.0V	0.5%	–40° to +125°C	8-Pin Plastic DIP	Standard
MIC2951-03BN	5.0V	1.0%	–40° to +125°C	8-Pin Plastic DIP	Standard
MIC2951-03BMM	5.0V	1.0%	–40° to +125°C	8-Pin MSOP	Standard
MIC2951-3.3BM	3.3V	1.0%	–40° to +125°C	8-Pin SOIC	Standard
MIC2950-05YZ*/***	5.0V	0.5%	–40° to +125°C	3-Pin TO-92	Pb-Free
MIC2950-06YZ*/***	5.0V	1.0%	–40° to +125°C	3-Pin TO-92	Pb-Free
MIC2951-02YM***	5.0V	0.5%	–40° to +125°C	8-Pin SOIC	Pb-Free
MIC2951-03YM***	5.0V	1.0%	–40° to +125°C	8-Pin SOIC	Pb-Free
MIC2951-03YN***	5.0V	1.0%	–40° to +125°C	8-Pin Plastic DIP	Pb-Free
MIC2951-03YMM***	5.0V	1.0%	–40° to +125°C	8-Pin MSOP	Pb-Free
MIC2951-3.3YM***	3.3V	1.0%	–40° to +125°C	8-Pin SOIC	Pb-Free

Note:

* TO-92 Package discontinuance notification issued September 2007. End-of-life-buy offer thru December 31, 2007. Contact factory for additional information.

** Contact factory for Pb-Free version.

*** Pb-Free RoHS compliant with ‘high-melting solder’ exemption.

Pin Configuration

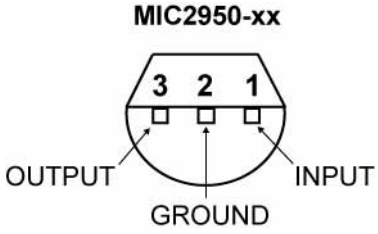

TO-92 (Z)
(Bottom View)

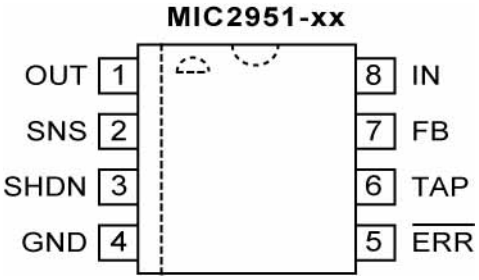

DIP (N), SOIC (M), MM8® (MM)
(Top View)

Pin Description

Pin No. MIC2950	Pin No. MIC2951	Pin Name	Pin Function
3	1	OUT	Regulated Output.
	2	SNS	Sense (Input): Output-voltage sensing end of internal voltage divider for fixed 5V operation. Not used in adjustable configuration.
	3	SHDN	Shutdown/Enable (Input): TTL compatible input. High = shutdown, low or open = enable.
2	4	GND	Ground.
	5	$\overline{\text{ERR}}$	Error Flag (Output): Active low, open-collector output (low = error, floating = normal).
	6	TAP	3.3V/4.85/5V Tap: Output of internal voltage divider when the regulator is configured for fixed operation. Not used in adjustable configuration.
	7	FB	Feedback (Input): 1.235V feedback from internal voltage divider's TAP (for fixed operation) or external resistor network (adjustable configuration).
1	8	IN	Unregulated Supply Input.

Absolute Maximum Ratings[1]

Input Supply Voltage (V_{IN}) [5] .....–20 to +60V
Feedback Input Voltage (V_{FB}) [6, 7] .....–1.5 to +26V
Shutdown Input Voltage (V_{SHDN}) [6].....–0.3 to +30V
Power Dissipation (P_D) [4] .....Internally Limited
Lead Temperature (soldering, 5 sec.)..... 260°C
Storage Temperature.....–65°C to +150°C
ESD[3]

Operating Ratings[2]

Input Supply Voltage (V_{IN}).....+2.0 to +30V
Junction Temperature (T_J) [4]
MIC2950-05/MIC2950-06.....–40°C to +125°C
MIC2951-02/MIC2950-03.....–40°C to +125°C

Electrical Characteristics[1]

V_{IN} = 6V; I_L = 100µA; C_L = 1µF; T_J = 25°C, **bold** values indicate –40°C ≤ T_J ≤ +125°C; **Note 8**; unless noted.

Parameter	Condition	Min	Typ	Max	Units
Output Voltage T_J = 25°C	MIC295x-02/-05 (±0.5%)	4.975	5.000	5.025	V
	MIC295x-03/06 (±1%)	4.950	5.000	5.050	V
	MIC2951-3.3 (±1%)	3.267	3.300	3.333	V
	MIC2951-4.8 (±1%)	4.802	4.850	4.899	V
Output Voltage –25°C ≤ T_J ≤ +85°C	MIC295x-02/-05 (±0.5%)	4.950		5.050	V
	MIC295x-03/-06 (±1%)	4.925		5.075	V
	MIC2951-3.3 (±1%)	3.251		3.350	V
	MIC2951-4.8 (±1%)	4.777		4.872	V
Output Voltage Over Full Temperature Range –40°C to +125°C	MIC295x-02/-05 (±0.5%)	**4.940**		**5.060**	V
	MIC295x-03/06 (±1%)	**4.900**		**5.100**	V
	MIC2951-3.3 (±1%)	**3.234**		**3.366**	V
	MIC2951-4.8 (±1%)	**4.753**		**4.947**	V
Output Voltage Over Load Variation	MIC295x-02/-05 (±0.5%), 100µA ≤ I_L ≤ 150mA, T_J ≤ $T_{J(max)}$	**4.930**		**5.070**	V
	MIC295x-03/-06 (±1%), 100µA ≤ I_L ≤ 150mA, T_J ≤ $T_{J(max)}$	**4.880**		**5.120**	V
	MIC2951-3.3 (±1%), 100µA ≤ I_L ≤ 150mA, T_J ≤ $T_{J(max)}$	**3.221**		**3.379**	V
	MIC2951-4.8 (±1%), 100µA ≤ I_L ≤ 150mA, T_J ≤ $T_{J(max)}$	**4.733**		**4.967**	V
Output Voltage Temperature Coefficient	MIC295x-02/-05 (±0.5%), **Note 9**		**20**	**100**	ppm/°C
	MIC295x-03/-06 (±1%), **Note 9**		**50**	**150**	ppm/°C
	MIC2951-3.3 (±1%), **Note 9**		**50**	**150**	ppm/°C
	MIC2951-4.8 (±1%), **Note 9**		50	150	ppm/°C
Line Regulation	MIC295x-02/-05 (±0.5%), **Notes 10, 11**		0.03	0.10 **0.20**	% %
	MIC295x-03/-06 (±1%), **Notes 10, 11**		0.04	0.20 **0.40**	% %
	MIC2951-3.3 (±1%), **Notes 10, 11**		0.04	0.20 **0.40**	% %
	MIC2951-4.8 (±1%), **Notes 10, 11**		0.04	0.20 **0.40**	% %

Parameter	Condition	Min	Typ	Max	Units
Load Regulation	MIC295x-02/-05 (±0.5%), 100µA ≤ I_L ≤ 150mA, **Note 10**		0.04	0.10 **0.20**	% %
	MIC295x-03/-06 (±1%), 100µA ≤ I_L ≤ 150mA, **Note 10**		0.10	0.20 **0.30**	% %
	MIC2951-3.3 (±1%), 100µA ≤ I_L ≤ 150mA, **Note 10**		0.10	0.20 **0.30**	% %
	MIC2951-4.8 (±1%), 100µA ≤ I_L ≤ 150mA, **Note 10**		0.10	0.20 **0.30**	% %
Dropout Voltage	MIC295x-02/-03/-05/-06, I_L = 100µA, **Note 12**		40	80 **140**	mV mV
	MIC295x-02/-03/-05/-06, I_L = 100mA, **Note 12**		250	300	mV
	MIC295x-02/-03/-05/-06, I_L = 150mA, **Note 12**		300	450 **600**	mV mV
	MIC2951-3.3 (±1%), I_L = 100µA, **Note 12**		40	80 **150**	mV mV
	MIC2951-3.3 (±1%), I_L = 100mA, **Note 12**		250	350	mV
	MIC2951-3.3 (±1%), I_L = 150mA, **Note 12**		320	450 **600**	mV mV
	MIC2951-4.8 (±1%), I_L = 100µA, **Note 12**		40	80 **140**	mV mV
	MIC2951-4.8 (±1%), I_L = 100mA, **Note 12**		250	300	mV
	MIC2951-4.8 (±1%), I_L = 150mA, **Note 12**		320	450 **600**	mV mV
Ground Current	MIC295x-02/-03/-05/-06, I_L = 100µA		120	180 **300**	µA µA
	MIC295x-02/-03/-05/-06, I_L = 100mA		1.7	2.5 **3.5**	mA mA
	MIC295x-02/-03/-05/-06, I_L = 150mA		4	6 **8**	mA mA
	MIC2951-3.3 (±1%), I_L = 100µA		100	180 **300**	µA µA
	MIC2951-3.3 (±1%), I_L = 100mA		1.7	2.5	mA
	MIC2951-3.3 (±1%), I_L = 150mA		4	6 **10**	mA mA
	MIC2951-4.8 (±1%), I_L = 100µA		120	180 **300**	µA µA
	MIC2951-4.8 (±1%), I_L = 100mA		1.7	2.5 **3.5**	mA mA
	MIC2951-4.8 (±1%), I_L = 150mA		4	6 **8**	mA mA
Dropout Ground Current	MIC295x-02/-03/-05/-06, V_{IN} = 4.5V, I_L = 100µA		280	350 **400**	µA µA
	MIC2951-3.3 (±1%), V_{IN} = 3.0V, I_L = 100µA		150	350 **400**	µA µA
	MIC2951-4.8 (±1%), V_{IN} = 4.3V, I_L = 100µA		280	350 **400**	µA µA

Parameter	Condition	Min	Typ	Max	Units
Current Limit	V_{OUT} = 0V		300	400 **450**	mA mA
Thermal Regulation	**Note 13**		0.05	0.20	%/W
Output Noise	10Hz to 100kHz, C_L = 1.5µF		430		μV_{RMS}
	10Hz to 100kHz, C_L = 200µF		160		μV_{RMS}
	10Hz to 100kHz, C_L = 3.3µF, 0.01µF bypass Feedback to Output		100		μV_{RMS}
Reference Voltage	MIC295x-02/-05 (±0.5%)	1.220 **1.200**	1.235	1.250 **1.260**	V V
	MIC295x-03/06 (±1%)	1.210 **1.200**	1.235	1.260 **1.270**	V V
	MIC2951-3.3 (±1%)	1.210 **1.200**	1.235	1.260 **1.270**	V V
	MIC2951-4.8 (±1%)	1.210 **1.200**	1.235	1.260 **1.270**	V V
Reference Voltage	MIC295x-02/-05 (±0.5%), **Note 14**	**1.190**		**1.270**	V
	MIC295x-03/-06 (±1%), **Note 14**	**1.185**		**1.285**	V
	MIC2951-3.3 (±1%), **Note 14**	**1.185**		**1.285**	V
	MIC2951-4.8 (±1%), **Note 14**	**1.185**		**1.285**	V
Feedback Bias Current			20	40 **60**	nA nA
Reference Voltage Temperature Coefficient	MIC295x-02/05 (±0.5%), **Note 9**		20		ppm/°C
	MIC295x-03/06 (±1%), **Note 9**		50		ppm/°C
	MIC2951-3.3 (±1%), **Note 9**		**50**		ppm/°C
	MIC2951-4.8 (±1%), **Note 9**		50		ppm/°C
Feedback Bias Current Temperature Coefficient			0.1		nA/°C
Error Comparator (Flag) Output Leakage Current	V_{OH} = 30V		0.01	1.00 **2.00**	µA µA
Error Comparator (Flag) Output Low Voltage (Flag)	V_{IN} = 4.5V, I_{OL} = 200µA		150	250 **400**	mV mV
Error Comparator (Flag) Upper Threshold Voltage	**Note 15**	40 **25**	60		mV mV
Error Comparator Lower Threshold Voltage	**Note 15**		75	95 **140**	mV mV
Error Comparator Hysteresis	**Note 15**		15		mV

Parameter	Condition	Min	Typ	Max	Units
Shutdown Input Logic Voltage	MIC295x-02/-05 (±0.5%) Low High	 **2.0**	1.3	 **0.7**	V V V
	MIC295x-03/-06 (±1%) Low High	 **2.0**	1.3	 **0.7**	V V V
	MIC2951-3.3 (±1%) Low High	 **2.0**	1.3	 **0.7**	V V V
	MIC2951-4.8 (±1%) Low High	 **2.0**	1.3	 **0.7**	V V V
Shutdown Input Current	$V_{SHUTDOWN}$ = 2.4V		30	50 **100**	µA µA
	$V_{SHUTDOWN}$ = 30V		450	600 **750**	µA µA
Regulator Output Current in Shutdown	**Note 7**		3	10 **20**	µA µA

Notes:

1. Exceeding the absolute maximum rating may damage the device.
2. The device is not guaranteed to function outside its operating rating.
3. Devices are ESD sensitive. Handling precautions are recommended.
4. The junction-to-ambient thermal resistance of the TO-92 package is 180°C/W with 0.4" leads and 160°C/W with 0.25" leads to a PC board. The thermal resistance of the 8-pin DIP package is 105°C/W junction-to-ambient when soldered directly to a PC board. Junction-to-ambient thermal resistance for the SOIC (M) package is 160°C/W. Junction-to-ambient thermal resistance for the MM8™ (MM) is 250°C/W.
5. The maximum positive supply voltage of 60V must be of limited duration (≤100ms) and duty cycle (≤1%). The maximum continuous supply voltage is 30V.
6. When used in dual-supply systems where the output terminal sees loads returned to a negative supply, the output voltage should be diode-clamped to ground.
7. $V_{SHDN} \geq 2V$, $V_{IN} \leq 30V$, $V_{OUT} = 0$, with the FB pin connected to TAP.
8. Additional conditions for 8-pin devices are $V_{FB} = 5V$, TAP and OUT connected to SNS ($V_{OUT} = 5V$) and $V_{SHDN} \leq 0.8V$.
9. Output or reference voltage temperature coefficient is defined as the worst case voltage change divided by the total temperature range.
10. Regulation is measured at constant junction temperature, using pulse testing with a low duty cycle. Changes in output voltage due to heating effects are covered in the specification for thermal regulation.
11. Line regulation for the MIC2951 is tested at 150°C for $I_L = 1mA$. For $I_L = 100\mu A$ and $T_J = 125°C$, line regulation is guaranteed by design to 0.2%. See Typical Performance Characteristics for line regulation versus temperature and load current.
12. Dropout voltage is defined as the input to output differential at which the output voltage drops 100mV below its nominal value measured at 1V differential. At very low values of programmed output voltage, the minimum input supply voltage of 2V (2.3V over temperature) must be taken into account.
13. Thermal regulation is defined as the change in output voltage at a time "t" after a change in power dissipation is applied, excluding load or line regulation effects. Specifications are for a 50mA load pulse at $V_{IN} = 30V$ (1.25W pulse) for t = 10ms.
14. $V_{REF} \leq V_{OUT} \leq (V_{IN} - 1\ V)$, $2.3V \leq V_{IN} \leq 30V$, $100\mu A < I_L \leq 150mA$, $T_J \leq T_{JMAX}$.
15. Comparator thresholds are expressed in terms of a voltage differential at the FB terminal below the nominal reference voltage measured at 6V input. To express these thresholds in terms of output voltage change, multiply by the error amplifier gain = $V_{OUT} / V_{REF} = (R1 + R2)/R2$. For example, at a programmed output voltage of 5V, the error output is guaranteed to go low when the output drops by 95mV x 5V/1.235V = 384mV. Thresholds remain constant as a percent of V_{OUT} as V_{OUT} is varied, with the dropout warning occurring at typically 5% below nominal, 7.5% guaranteed.
16. Specification for packaged product only.

Typical Characteristics

Ground Pin Current

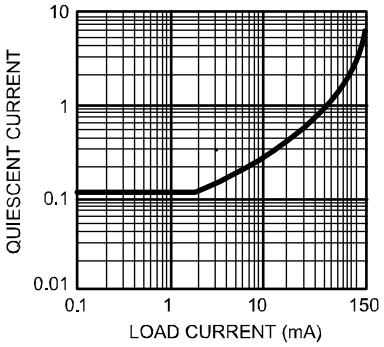

Dropout Characteristics

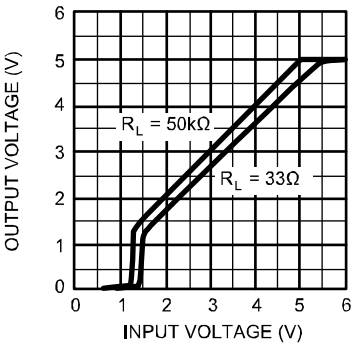

Input Current

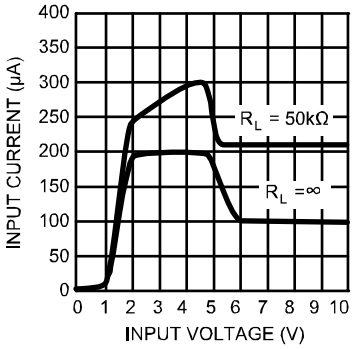

Input Current

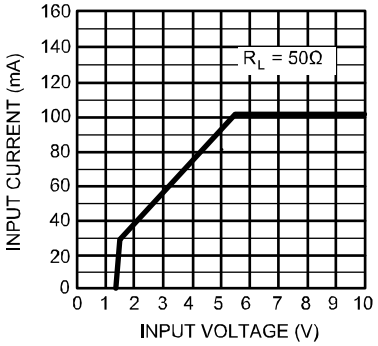

Output Voltage vs. Temperature of 3 Representative Units

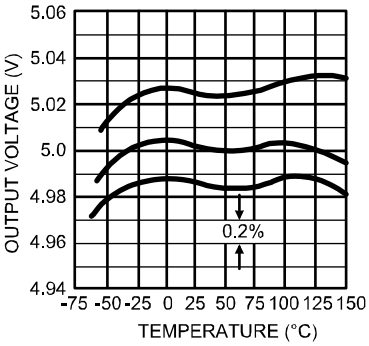

Ground Pin Current

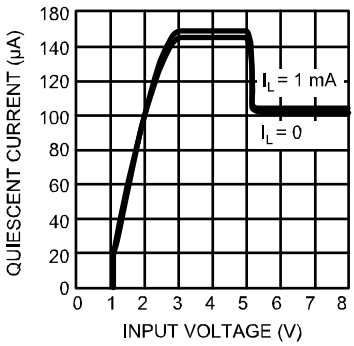

Ground Pin Current

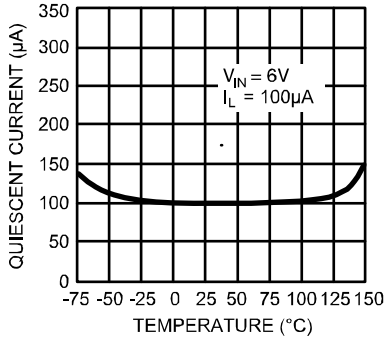

Ground Pin Current

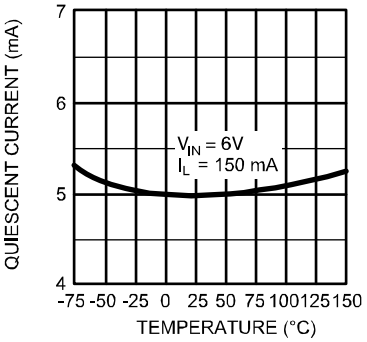

Ground Pin Current

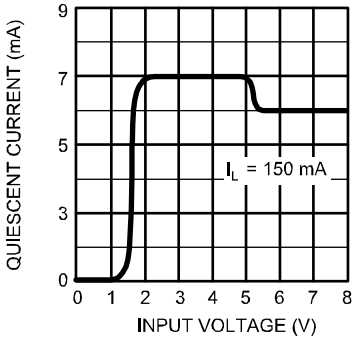

Short Circuit Current

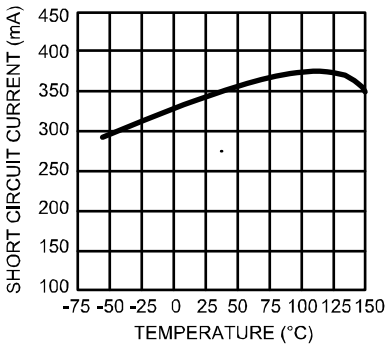

Dropout Voltage

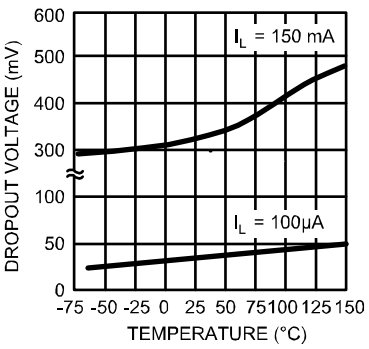

Dropout Voltage

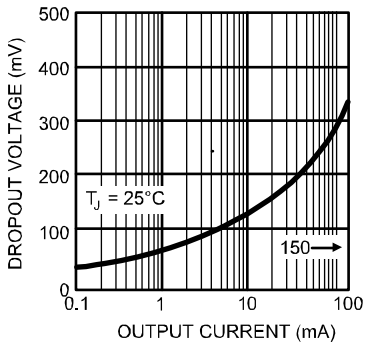

Typical Characteristics (continued)

MIC2951
Minimum Operating Voltage

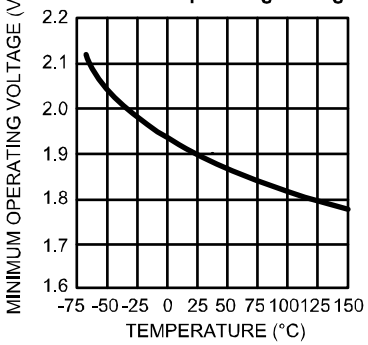

MIC2951
Feedback Bias Current

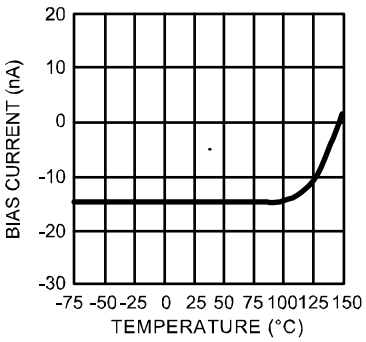

MIC2951
Feedback Pin Current

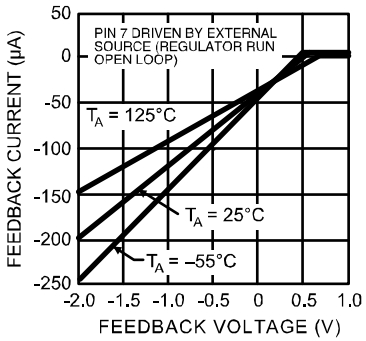

MIC2951
Error Comparator Output

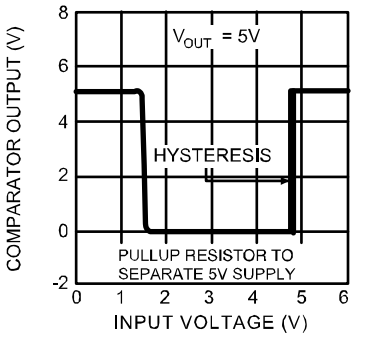

MIC2951
Comparator Sink Current

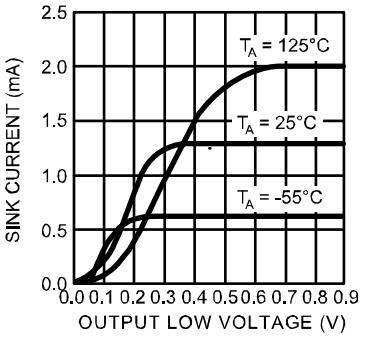

Line Transient Response

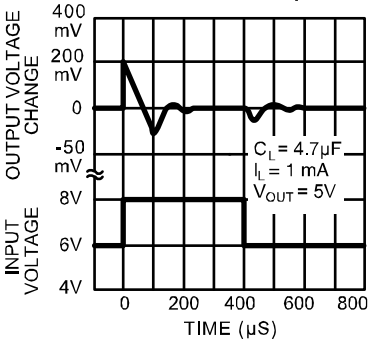

Load Transient Response

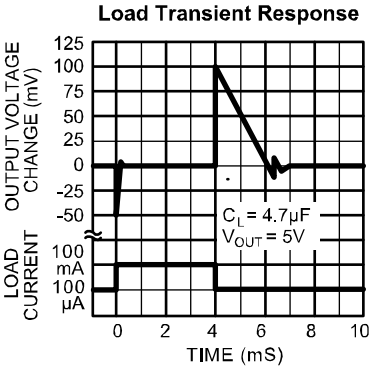

Load Transient Response

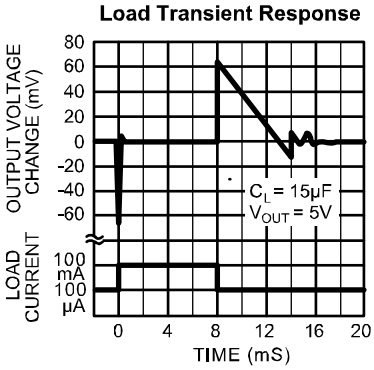

MIC2951
Enable Transient

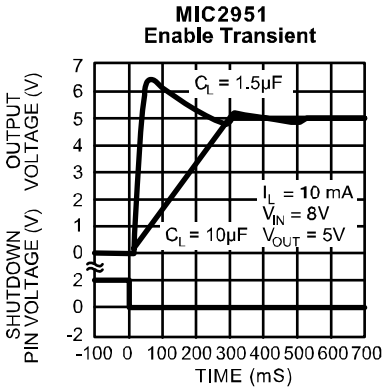

Output Impedance

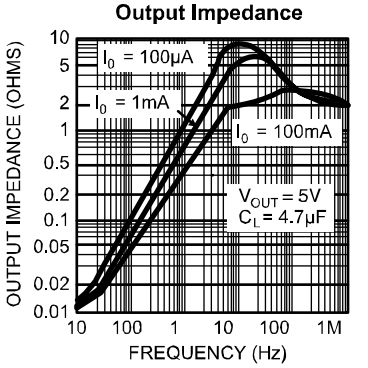

Ripple Rejection

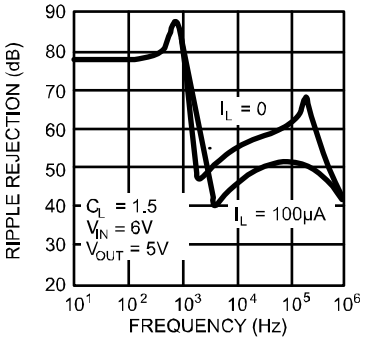

Ripple Rejection

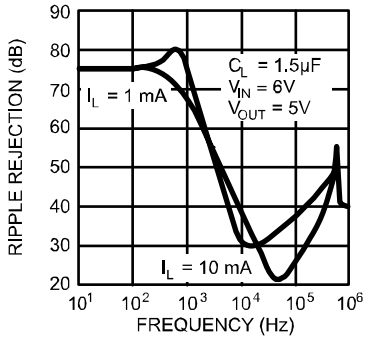

Typical Characteristics (continued)

Ripple Rejection

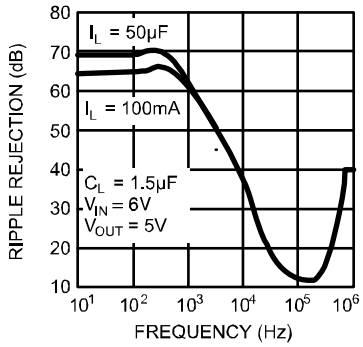

Output Noise

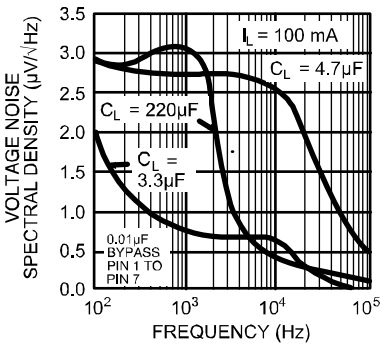

MIC2951 Divider Resistance

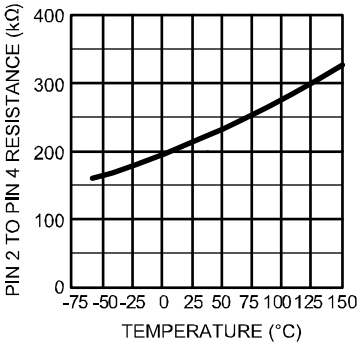

Shutdown Threshold Voltage

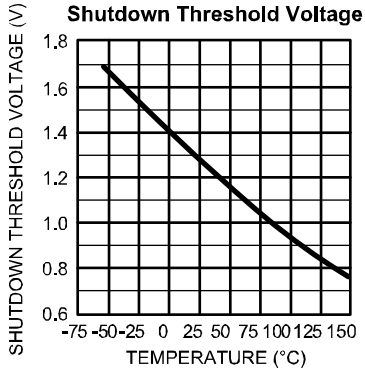

Line Regulation

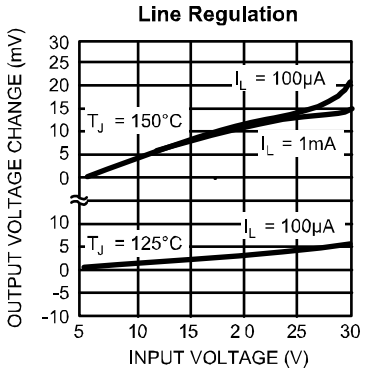

MIC2951 Maximum Rated Output Current

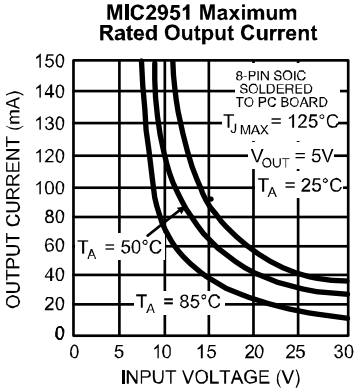

MIC2950 Maximum Rated Output

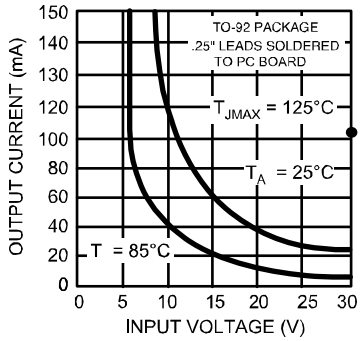

Thermal Response

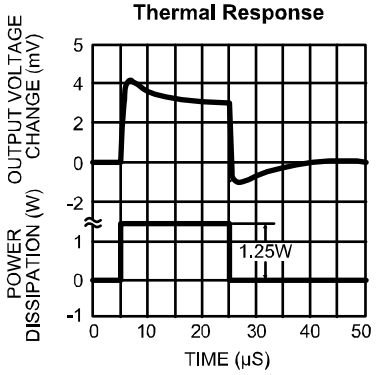

Fold-Back Current Limiting

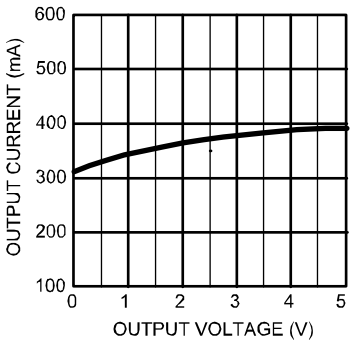

Application Information

Automotive Applications

The MIC2950/2951 are ideally suited for automotive applications for a variety of reasons. They will operate over a wide range of input voltages, have very low dropout voltages (40mV at light loads), and very low quiescent currents. These features are necessary for use in battery powered systems, such as automobiles. They are also "bulletproof" devices; with the ability to survive both reverse battery (negative transients up to 20V below ground), and load dump (positive transients up to 60V) conditions. A wide operating temperature range with low temperature coefficients is yet another reason to use these versatile regulators in automotive designs

External Capacitors

A 1.5µF (or greater) capacitor is required between the MIC2950/MIC2951 output and ground to prevent oscillations due to instability. Most types of tantalum or aluminum elec-trolytics will be adequate; film types will work, but are costly and therefore not recommended. Many aluminum electrolytics have electrolytes that freeze at about –30°C, so solid tantalums are recomm-ended for operation below –25°C. The important parameters of the capacitor are an effective series resistance of about 5Ω or less and a resonant frequency above 500kHz. The value of this capacitor may be increased without limit.

At lower values of output current, less output capacitance is required for output stability. The capacitor can be reduced to 0.5µF for current below 10mA or 0.15µF for currents below 1 mA. Using the 8-pin versions at voltages below 5V runs the error amplifier at lower gains so that more output capacitance is needed. For the worst-case situation of a 150mA load at 1.23V output (Output shorted to Feedback) a 5µF (or greater) capacitor should be used.

The MIC2950 will remain stable and in regulation with no load in addition to the internal voltage divider, unlike many other voltage regulators. This is especially important in CMOS RAM keep-alive applications. When setting the output voltage of the MIC2951 version with external resistors, a minimum load of 1µA is recomm-ended.

A 0.1µF capacitor should be placed from the MIC2950/ MIC2951 input to ground if there is more than 10 inches of wire between the input and the AC filter capacitor or if a battery is used as the input.

Stray capacitance to the MIC2951 Feedback terminal (pin 7) can cause instability. This may especially be a problem when using high value external resistors to set the output voltage. Adding a 100pF capacitor between Output and Feedback and increasing the output capacitor to at least 3.3µF will remedy this.

Error Detection Comparator Output

A logic low output will be produced by the comparator whenever the MIC2951 output falls out of regulation by more than approximately 5%. This figure is the comparator's built-in offset of about 60mV divided by the 1.235V reference voltage. (Refer to the block diagram on Page 1). This trip level remains "5% below normal" regardless of the programmed output voltage of the MIC2951. For example, the error flag trip level is typically 4.75V for a 5V output or 11.4V for a 12V output. The out of regulation condition may be due either to low input voltage, current limiting, thermal limiting, or overvolt-age on input (over ≅ 40V).

Figure 1 is a timing diagram depicting the /ERROR signal and the regulated output voltage as the MIC2951 input is ramped up and down. The /ERROR signal becomes valid (low) at about 1.3V input. It goes high at about 5V input (the input voltage at which V_{OUT} = 4.75—for 5.0V applications). Since the MIC2951's dropout voltage is load-dependent (see curve in Typical Performance Characteristics), the input voltage trip point (about 5V) will vary with the load current. The output voltage trip point does not vary with load.

The error comparator has an open-collector output which requires an external pull-up resistor. Depending on system requirements, this resistor may be returned to the output or some other supply voltage. In determining a value for this resistor, note that while the output is rated to sink 200µA, this sink current adds to battery drain in a low battery condition. Suggested values range from 100k to 1MΩ. The resistor is not required if this output is unused.

Programming the Output Voltage (MIC2951)

The MIC2951 may be pin-strapped for 5V (or 3.3V or 4.85V) using its internal voltage divider by tying Pin 1 (output) to Pin 2 (sense) and Pin 7 (feedback) to Pin 6 (5V Tap). Alternatively, it may be programmed for any output voltage between its 1.235V reference and its 30V maximum rating. An external pair of resistors is required, as shown in Figure 2.

The complete equation for the output voltage is:

$$V_{OUT} = V_{REF} \times \left\{1 + \frac{R_1}{R_2}\right\} + I_{FB}\, R_1$$

where V_{REF} is the nominal 1.235 reference voltage and I_{FB} is the feedback pin bias current, nominally –20nA. The minimum recommended load current of 1µA forces an upper limit of 1.2MΩ on the value of R_2, if the regulator must work with no load (a condition often found in CMOS in standby), I_{FB} will produce a 2% typical error in V_{OUT} which may be eliminated at room temperature by trimming R_1. For better accuracy, choosing R_2 = 100k reduces this error to 0.17% while increasing the resistor program current to 12µA.

Reducing Output Noise

In some applications it may be advantageous to reduce the AC noise present at the output. One method is to reduce the regulator bandwidth by increasing the size of the output capacitor. This is the only method by which noise can be reduced on the 3 lead MIC2950 and is relatively inefficient, as increasing the capacitor from 1µF to 220µF only decreases the noise from 430µV to 160µV rms for a 100kHz bandwidth at 5V output.

Noise can be reduced fourfold by a bypass capacitor across R_1, since it reduces the high frequency gain from 4 to unity. Pick:

$$C_{BYPASS} \cong \frac{1}{2\pi R_1 \bullet 200Hz}$$

or about 0.01µF. When doing this, the output capacitor must be increased to 3.3µF to maintain stability. These changes reduce the output noise from 430µV to 100µVrms for a100kHz bandwidth at 5V output. With the bypass capacitor added, noise no longer scales with output voltage so that improvements are more dramatic at higher output voltages.

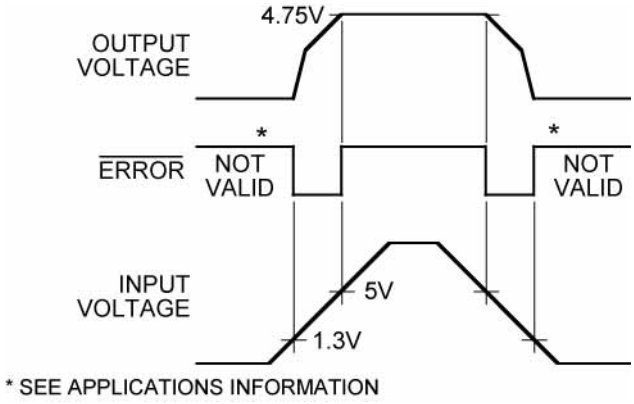

Figure 1. ERROR Output Timing

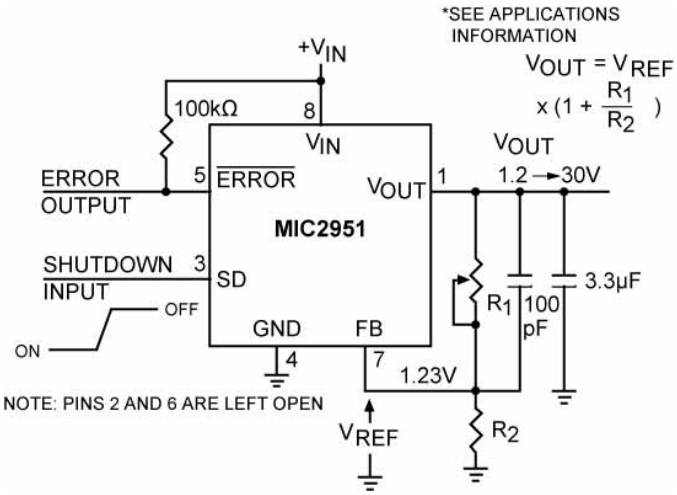

Figure 2. Adjustable Regulator

Typical Applications

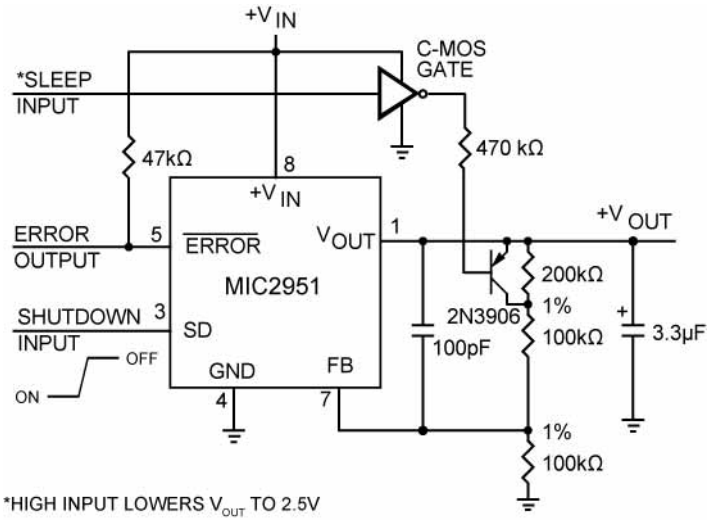

5V Regulator with 2.5V Sleep Function

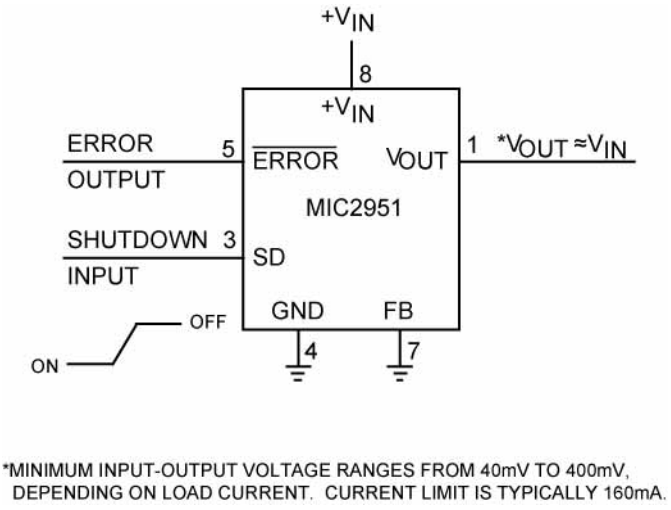

Wide Input Voltage Range Current Limiter

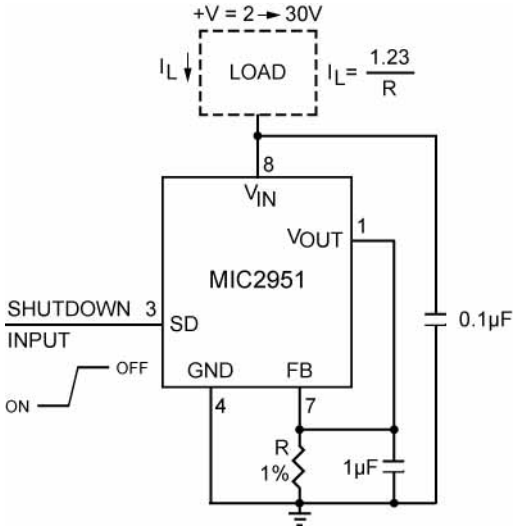

Low Drift Current Source

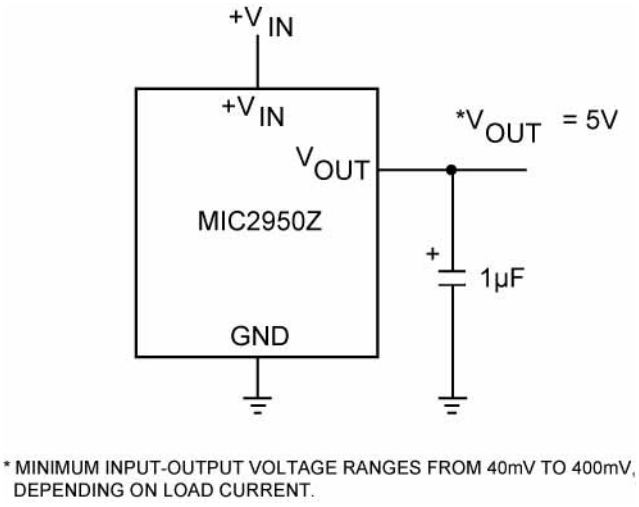

5V Current Limiter

Typical Applications

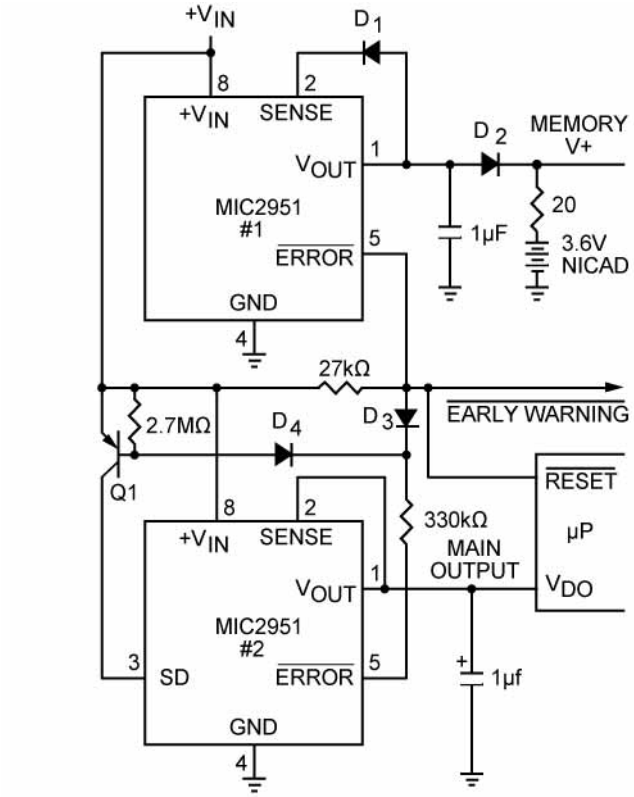

• EARLY WARNING FLAG ON LOW INPUT VOLTAGE
• MAIN OUTPUT LATCHES OFF AT LOWER INPUT VOLTAGES
• BATTERY BACKUP ON AUXILIARY OUTPUT

OPERATION: REG. #1'S V_{OUT} IS PROGRAMMED ONE DIODE DROP ABOVE 5 V. ITS ERROR FLAG BECOMES ACTIVE WHEN $V_{IN} \leq 5.7$ V. WHEN V_{IN} DROPS BELOW 5.3 V, THE ERROR FLAG OF REG. #2 BECOMES ACTIVE AND VIA Q1 LATCHES THE MAIN OUTPUT OFF. WHEN V_{IN} AGAIN EXCEEDS 5.7 V REG. #1 IS BACK IN REGULATION AND THE EARLY WARNING SIGNAL RISES, UNLATCHING REG. #2 VIA D3.

Regulator with Early Warning and Auxiliary Output

Typical Applications

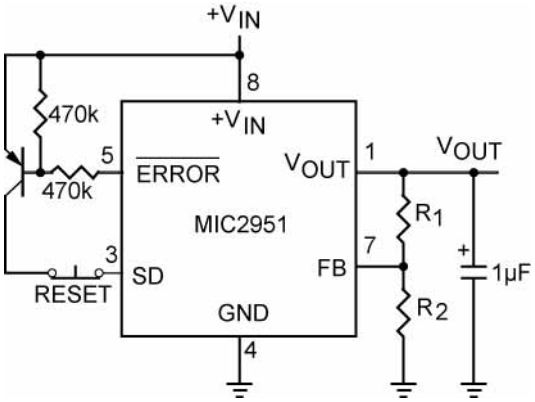

Latch Off When Error Flag Occurs

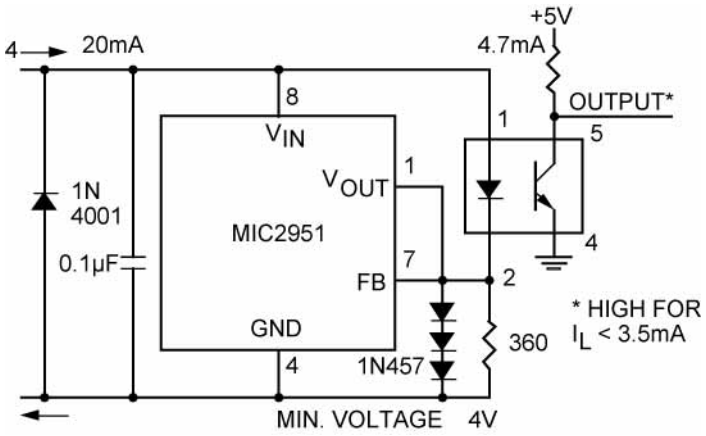

Open Circuit Detector for 4mA to 20mA Current Loop

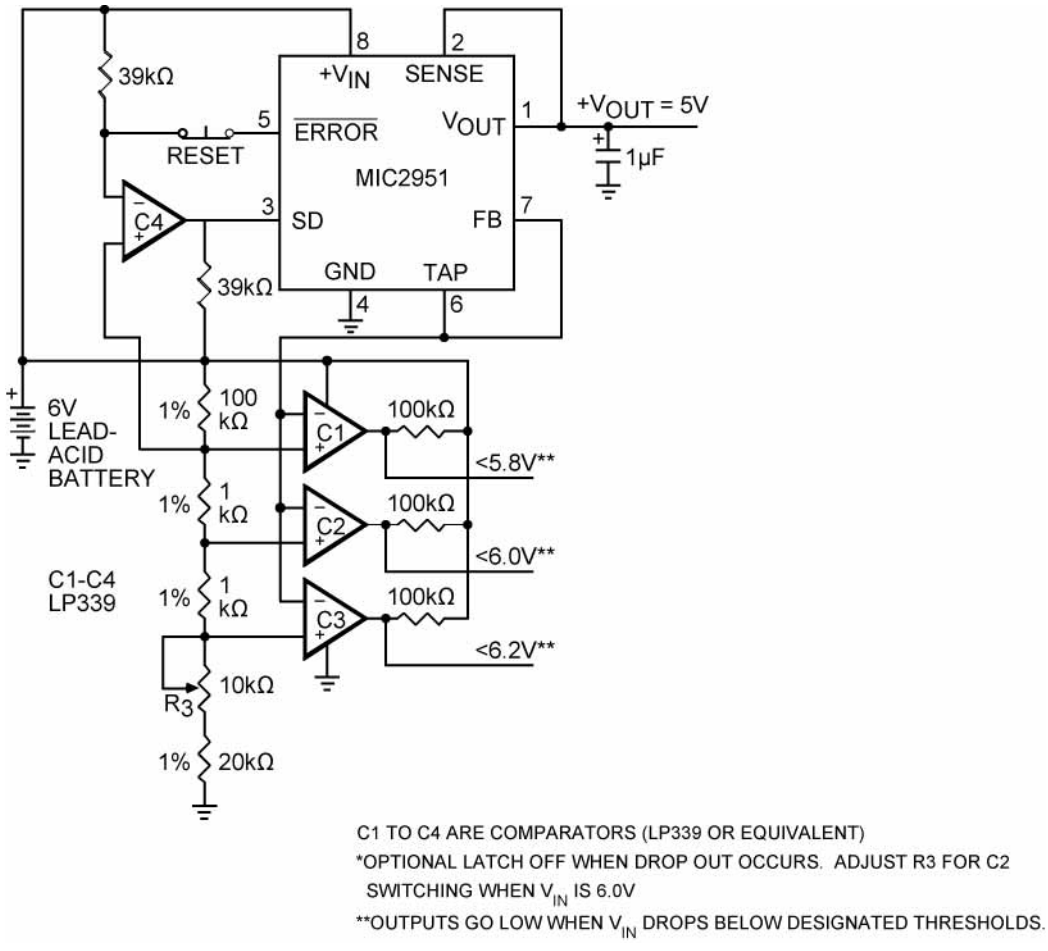

Regulator with State-of-Charge Indicator

Typical Applications

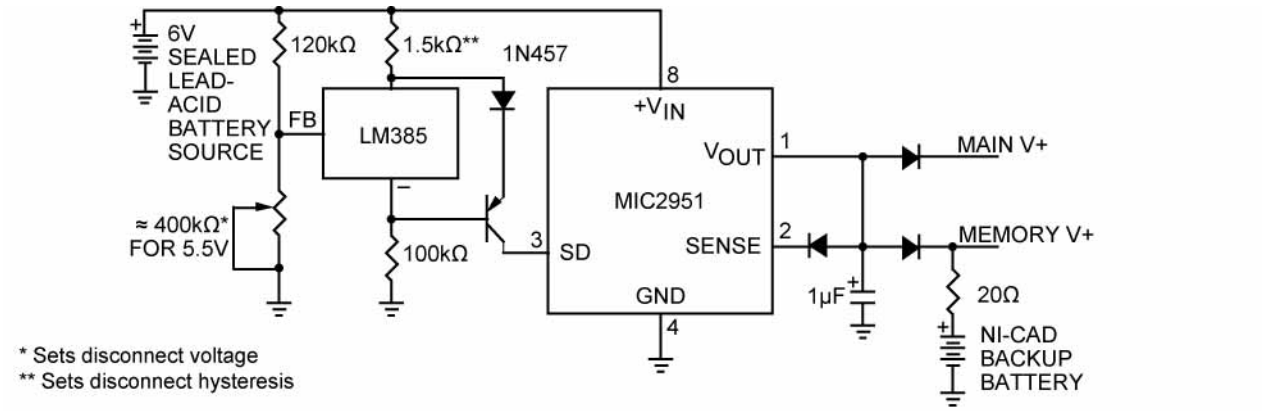

For values shown, Regulator shuts down when V_{IN} < 5.5 V and turns on again at 6.0 V. Current drain in disconnected mode is 150µA.

Low Battery Disconnect

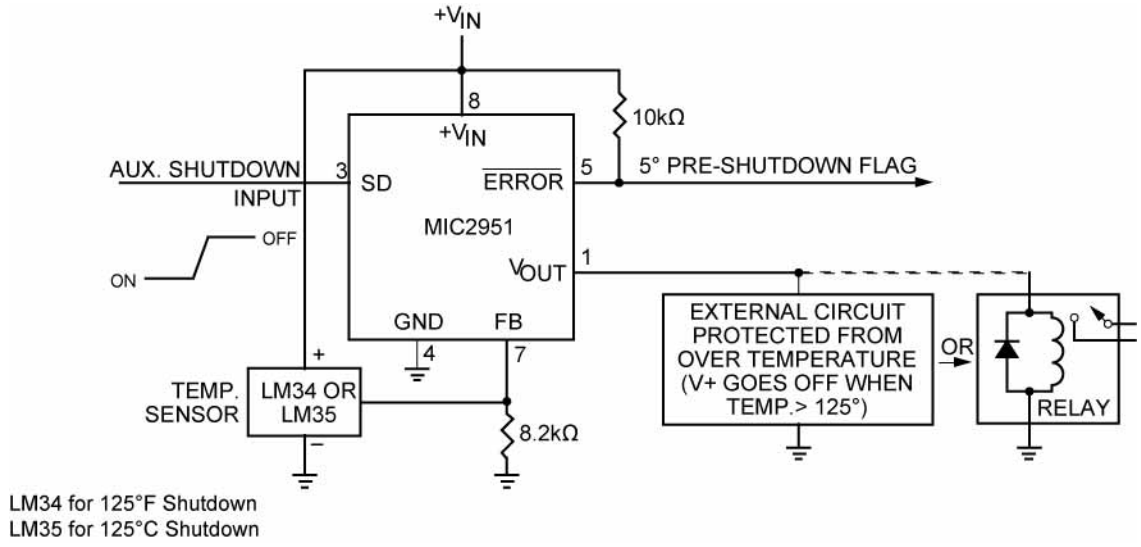

System Over Temperature Protection Circuit

Schematic Diagram

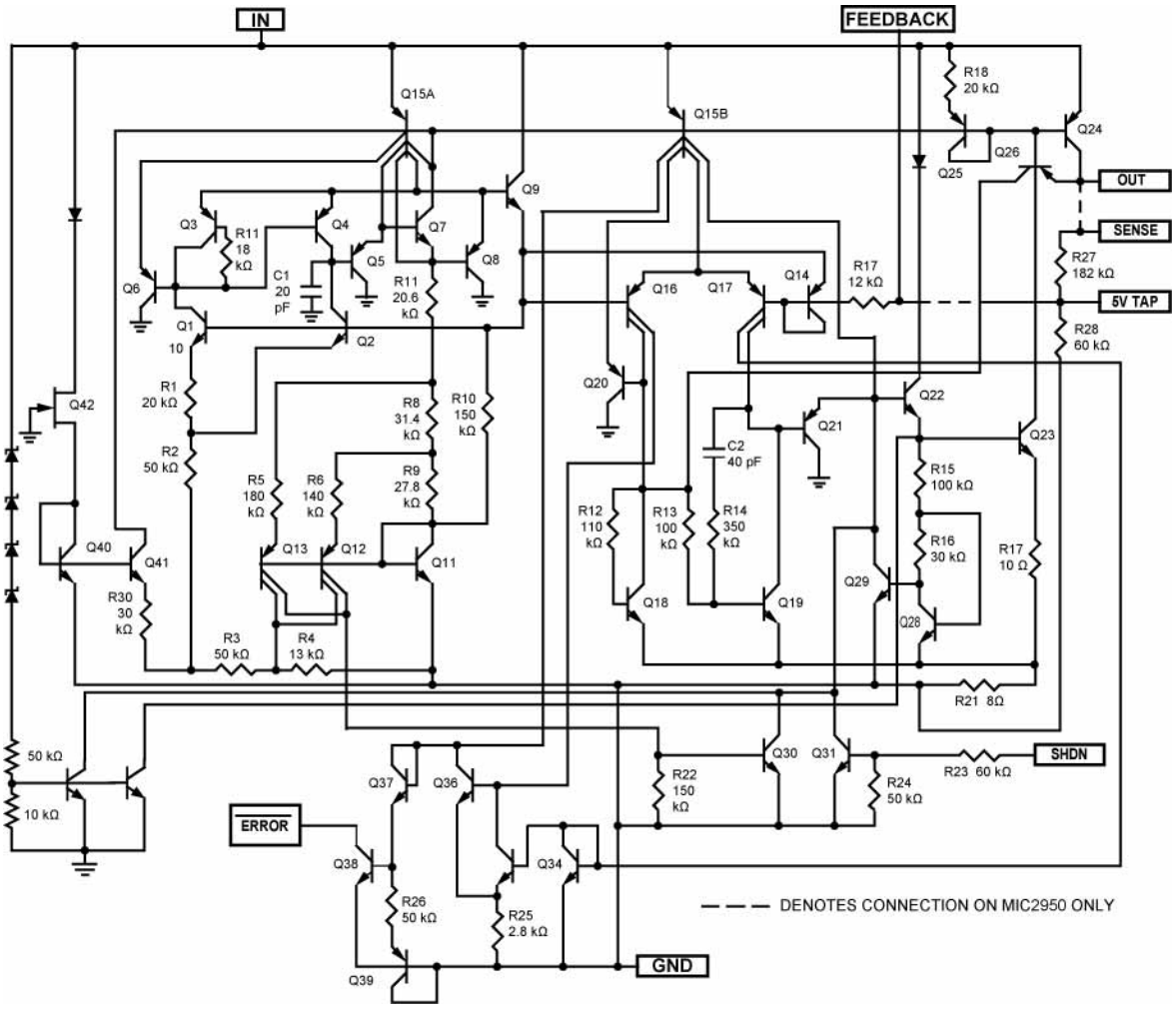

Package Information

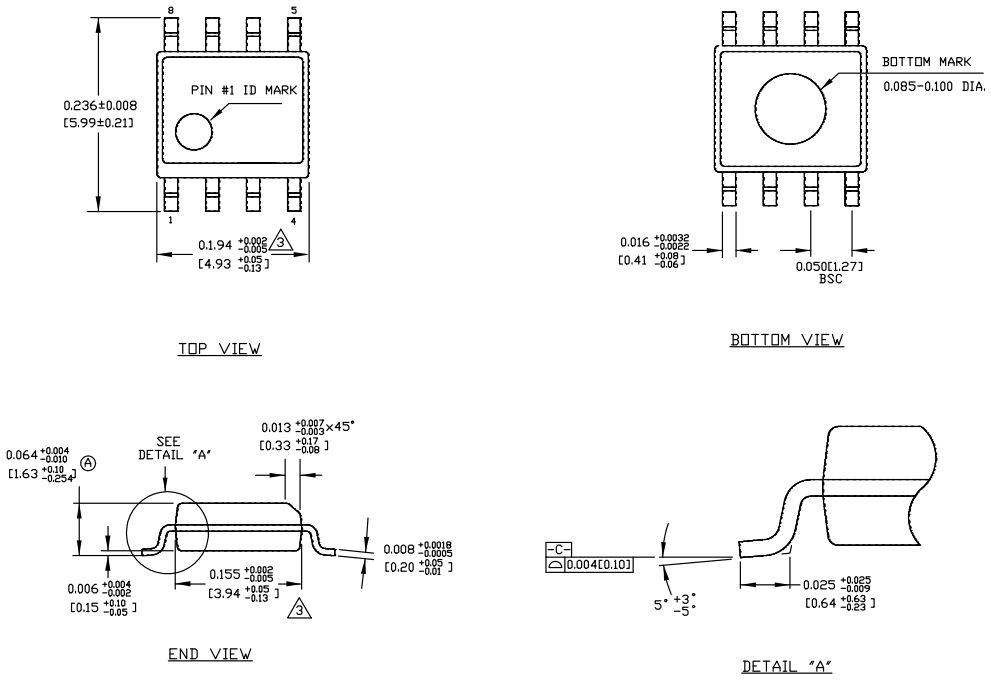

NOTES:
1. DIMENSIONS ARE IN INCHES[MM].
2. CONTROLLING DIMENSION: INCHES.
3. DIMENSION DOES NOT INCLUDE MOLD FLASH OR PROTRUSIONS, EITHER OF WHICH SHALL NOT EXCEED 0.010[0.25] PER SIDE.

8-Pin SOIC (M)

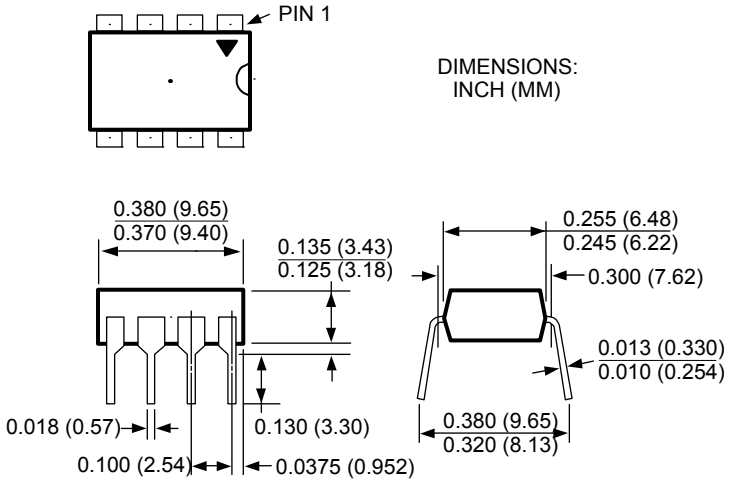

8-Pin Plastic DIP (N)

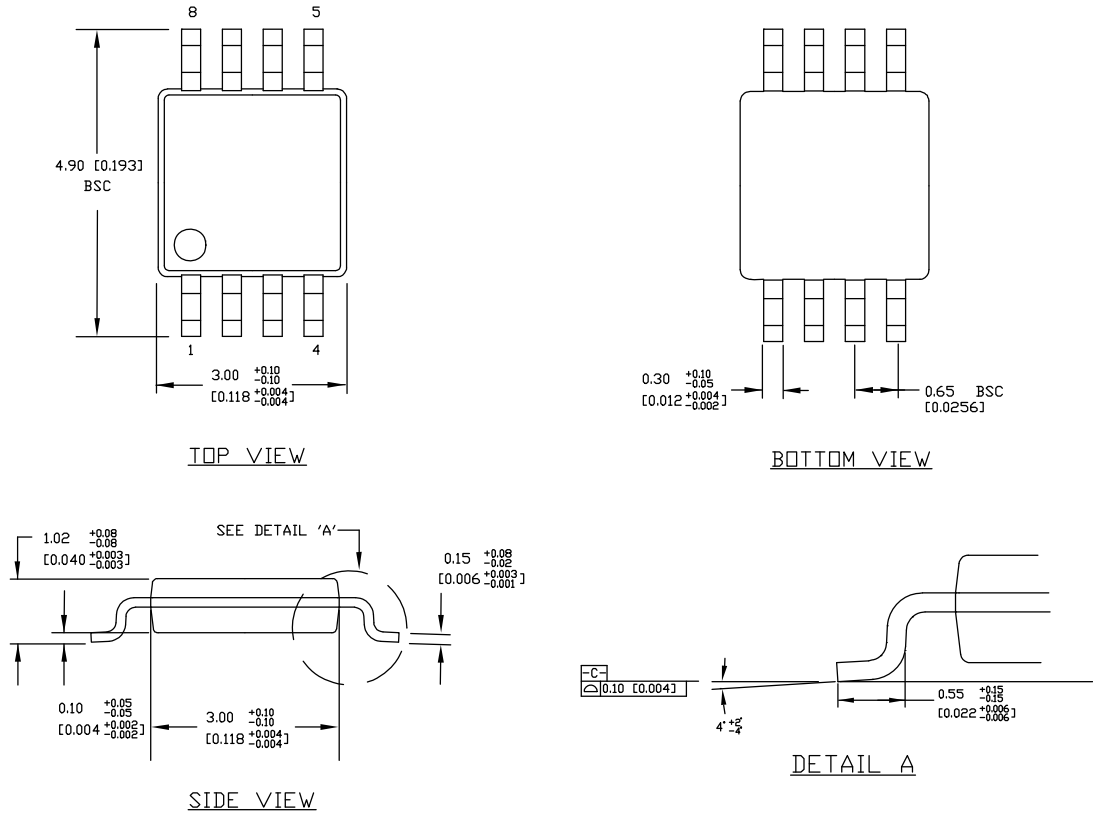

NOTES:
1. DIMENSIONS ARE IN MM [INCHES].
2. CONTROLLING DIMENSION: MM
3. DIMENSION DOES NOT INCLUDE MOLD FLASH OR PROTRUSIONS, EITHER OF WHICH SHALL NOT EXCEED 0.20 [0.008] PER SIDE.

8-Pin MSOP (MM)

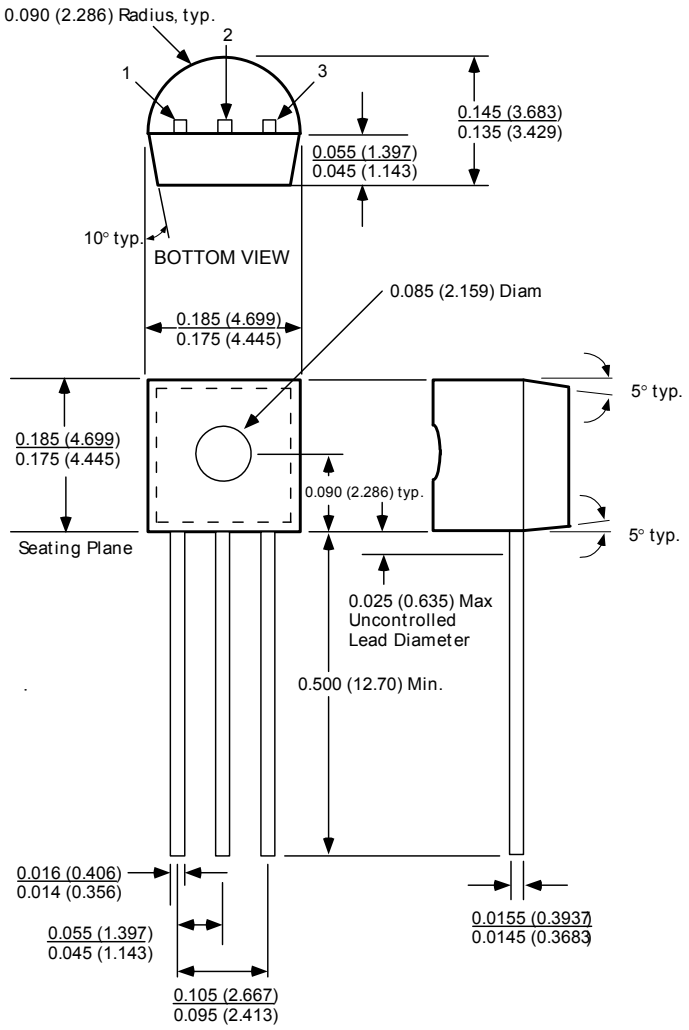

TO-92 (Z)

MICREL, INC. 2180 FORTUNE DRIVE SAN JOSE, CA 95131 USA
TEL +1 (408) 944-0800 FAX +1 (408) 474-1000 WEB http://www.micrel.com

The information furnished by Micrel in this data sheet is believed to be accurate and reliable. However, no responsibility is assumed by Micrel for its use. Micrel reserves the right to change circuitry and specifications at any time without notification to the customer.

Micrel Products are not designed or authorized for use as components in life support appliances, devices or systems where malfunction of a product can reasonably be expected to result in personal injury. Life support devices or systems are devices or systems that (a) are intended for surgical implant into the body or (b) support or sustain life, and whose failure to perform can be reasonably expected to result in a significant injury to the user. A Purchaser's use or sale of Micrel Products for use in life support appliances, devices or systems is a Purchaser's own risk and Purchaser agrees to fully indemnify Micrel for any damages resulting from such use or sale.

© 1999 Micrel, Incorporated.

ENTEGRECİ

Bu belge www.entegreci.com üzerinden sunulmaktadır.

Elektronik komponent tedarikinde Entegreci

Entegreci, Eskişehir merkezli, Türkiye geneline satış yapan bir elektronik komponent mağazasıdır. Entegreler (IC), mikrodenetleyiciler, transistörler, diyotlar, pasif elemanlar, konnektörler, modüller ve geliştirme kartları tek adetten seri üretim adetlerine kadar satılır. Ürün sayfalarında güncel stok durumunu, fiyatı ve datasheet bağlantısını bulabilirsiniz.

Parça koduyla arama

Üretici parça numarasını yazın; stok ve fiyatı hemen görün.

www.entegreci.com

Ürün kategorileri

Entegreden kapasitöre tüm elektronik komponent kategorileri.

Kategorilere göz atın

Üreticiler

Aradığınız üreticinin ürünlerini tek sayfada inceleyin.

Üreticileri görün

Toplu alım ve teklif

Listede olmayan ya da yüksek adetli parçalar için teklif isteyin.

Teklif isteyin

www.entegreci.com | **destek@entegreci.com** | **0850 305 90 34**

Entegreci is an online electronic components store based in Türkiye. Search by manufacturer part number to see stock, prices and datasheets for integrated circuits, microcontrollers, transistors, passive components and connectors, or request a quote for parts that are not listed.

Bu sayfa Entegreci tarafından eklenmiştir. Belgenin önceki sayfaları asıl yayıncısına aittir ve içeriği değiştirilmemiştir; en güncel sürüm için belgenin yayıncısına başvurun.