MIC2954

250mA Low-Dropout Regulator

General Description

The MIC2954 is a "bulletproof" efficient voltage regulator with very low dropout voltage (typically 40mV @ light loads and 375mV @ 250mA), and low quiescent current (120µA typical). The quiescent current of the MIC2954 increases only slightly in dropout, thus prolonging battery life. Key MIC2954 features include protection against reversed battery, fold-back current limiting, and automotive load dump protection (60V positive transient).

The MIC2954-07/08BM is an adjustable version that includes an error flag output that warns of a low output voltage, which is often due to failing batteries on the input. This may also be used as a power-on reset. A logic-compatible shutdown input is provided which enables the regulator to be switched on and off. This part may be pin-strapped for 5V output, or programmed from 1.24V to 29V with the use of two external resistors.

The MIC2954 is available in two voltage tolerances, ±0.5% maximum and ±1% maximum. Both are guaranteed for junction temperatures from –40°C to +125°C.

Data sheets and support documentation can be found on Micrel's web site at www.micrel.com.

Features

- High-accuracy 5V, guaranteed 250mA output
- Low quiescent current
- Low dropout voltage
- Extremely tight load and line regulation
- Very low temperature coefficient
- Current and thermal limiting
- Input can withstand –20V reverse battery and+60V positive transients
- Error flag warns of low output voltage
- Logic-controlled electronic shutdown
- Output programmable from 1.24V to 29V (MIC2954-07/08)
- Available in TO-220, TO-92, and surface-mount SOT-223 and SOIC-8 packages

Applications

- Battery powered equipment
- Cellular telephones
- Laptop, notebook, and palmtop computers
- PCMCIA V_{CC} and V_{PP} regulation/switching
- Bar code scanners
- Automotive electronics
- SMPS post-regulator/dc-to-dc modules
- Voltage reference
- High-efficiency linear power supplies

Ordering Information

Part Number		Accuracy	Junction Temp. Range	Package
Standard	Pb-Free / RoHS Compliant			
MIC2954-02BT	MIC2954-02WT*	0.5%	–40° to +125°C	TO-220-3
MIC2954-03BT	MIC2954-03WT*	1.0%	–40° to +125°C	TO-220-3
MIC2954-02BS	MIC2954-02WS*	0.5%	–40° to +125°C	SOT-223-3
MIC2954-03BS	MIC2954-03WS*	1.0%	–40° to +125°C	SOT-223-3
MIC2954-02BZ	MIC2954-02YZ	0.5%	–40° to +125°C	TO-92-3**
MIC2954-03BZ	MIC2954-03YZ	1.0%	–40° to +125°C	TO-92-3**
MIC2954-07BM	MIC2954-07YM	0.5%	–40° to +125°C	8-Pin SOIC
MIC2954-08BM	MIC2954-08YM	1.0%	–40° to +125°C	8-Pin SOIC

* RoHS compliant with 'high-melting solder' exemption.

** TO-92 package discontinuance notification issued September 2007. End-of-life-buy offered thru December 31, 2007. Contact factory for additional information.

Typical Application

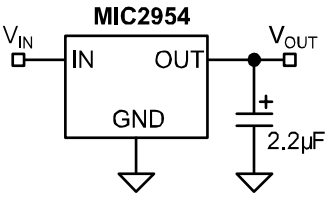

5V Fixed Regulator

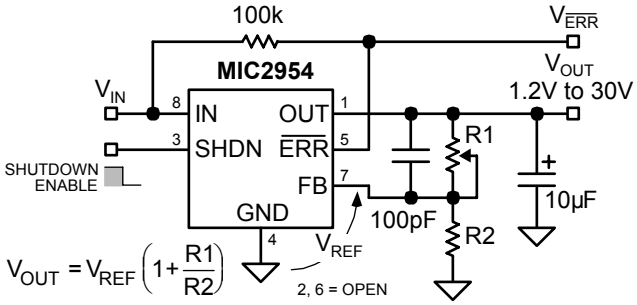

Adjustable Regulator

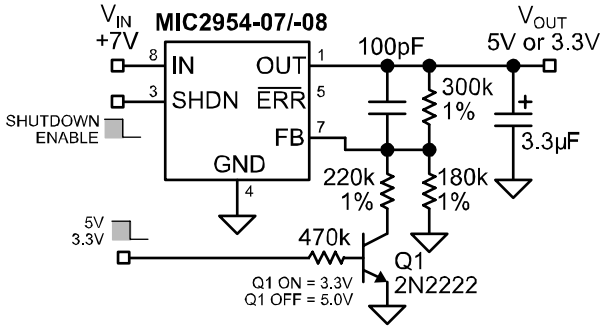

5V or 3V Selectable Regulator with Shutdown

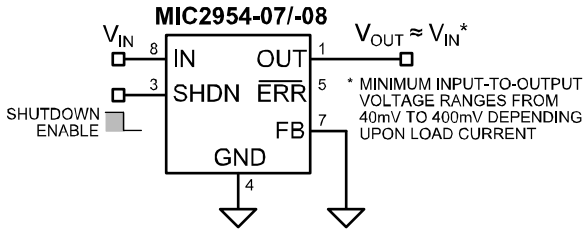

Wide Input-Voltage-Range Current Limiter

Pin Configuration

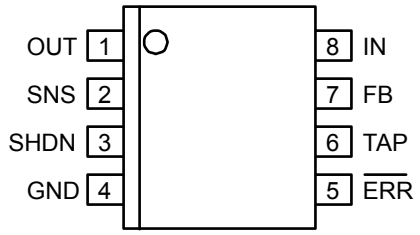

8-Pin SOIC (M)

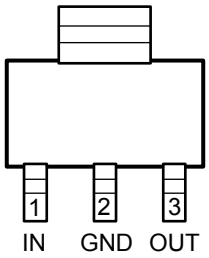

3-Pin SOT-223 (S)

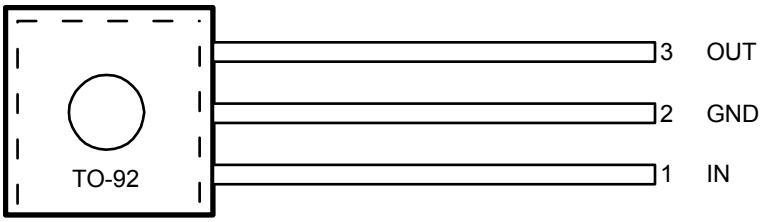

3-Pin TO-92 (Z)

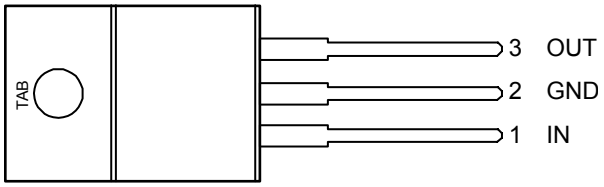

3-Pin TO-220 (T)

Pin Description

Pin No. SOIC-8	Pin No. SOT-223	Pin No. TO-92	Pin No. TO-220	Pin Name	Pin Name
8	1	1	1	IN	Supply Input.
4	2, TAB	2	2	GND	Ground.
1	3	3	3	OUT	Regulator Output.
2				SNS	Sense (Input): Output-sense-voltage end of internal resistive divider. Connect to OUT (V_{OUT} = 5V) for fixed5V operation; also see TAP. Not used in adjustable configuration.
3				SHDN	Shutdown (Input): Active-low input enables regulator. (Low = enable; high = shutdown.)
5				/ERR	Error Flag (Output): Open collector (active-low) output. Active state indicates an output (V_{OUT}) undervoltage condition. (Low = error, floating = normal.)
6				TAP	Divider Tap (Output): Resistive voltage divider tap. With 5Vapplied to SNS, VTAP is approximately 1.23V. Connect to FB for 5V operation. Not used in adjustable configuration.
7				FB	Feedback (Input): Error amplifier input. Compared to internal1.23V reference. Connect to external voltage divider for adjustable operation or internal voltage divider (TAP) for 5V operation (see SNS, TAP).

Absolute Maximum Ratings[1]

Supply Voltage (V_{IN}) ..... –20V to +60V
Feedback Voltage (V_{FB}) [14, 15] ..... –1.5V to +26V
Shutdown Input Voltage (V_{SHDN}) ..... –0.3V to +30V
Error Output Voltage (V_{ERR}) ..... –0.3V to +30V
Power Dissipation (P_D) [4] ..... Internally Limited
Lead Temperature (soldering, 5 sec.) ..... 260°C
Storage Temperature (T_s) ..... –65°C to +150°C
ESD Rating[3]

Operating Ratings[2]

Supply Voltage (V_{IN}) ..... +2.0V to +30V
Junction Temperature (T_J) ..... –40°C to +125°C
Package Thermal Resistance (θ_{JC}, θ_{JA}) [5]

Electrical Characteristics

MIC2954-07/08: $V_{FB} = V_{TAP}$; $V_{SNS} = V_{OUT}$; $V_{SHDN} \le 0.6V$. All versions: $V_{IN} = 6V$; $I_L = 1mA$; $C_L = 2.2\mu F$; $T_J = 25°C$, **bold** values indicate $–40°C \le T_J \le +125°C$; **Note 8**; unless noted.

Symbol	Parameter	Condition	Min	Typ	Max	Units
V_{OUT}	Output Voltage	MIC2954-02/-07 (±0.5%)	4.975 **4.940**	5.000	5.025 **5.060**	V V
		MIC2954-02/-07 (±0.5%), 1mA ≤ I_L ≤ 250mA	**4.930**	**5.000**	**5.070**	V
		MIC2954-03/-08 (±1%)	4.950 **4.900**	5.000	5.050 **5.100**	V V
		MIC2954-03/-08 (±1%), 1mA ≤ I_L ≤ 250mA	**4.880**	**5.000**	**5.120**	V
$\Delta V_{OUT}/\Delta T$	Output Voltage Temperature Coefficient, **Note 6**	MIC2954-02/-07 (±0.5%)		**20**	**100**	ppm/°C
		MIC2954-03/-08 (±1%)		**20**	**150**	ppm/°C
$\Delta V_{OUT}/V_{OUT}$	Line Regulation, **Note 7**	MIC2954-02/-07 (±0.5%), V_{IN} = 6V to 26V		0.03	0.10 **0.20**	%/V %/V
		MIC2954-03/-08 (±1%), V_{IN} = 6V to 26V		0.03	0.20 **0.40**	%/V %/V
$\Delta V_{OUT}/V_{OUT}$	Load Regulation, **Note 8**	MIC2954-02/-07 (±0.5%), I_L = 1 to 250mA		0.04	0.16 0.20	%/V %/V
		MIC2954-03/-08 (±1%), I_L = 1 to 250mA		0.04	0.20 **0.30**	%/V %/V
$V_{IN} – V_{OUT}$	Dropout Voltage, **Note 9**	I_L = 1mA		60	100 **150**	mV mV
		I_L = 50mA		220	250 **420**	mV mV
		I_L = 100mA		250	300 **450**	mV mV
		I_L = 250mA		375	450 **600**	mV mV
I_{GND}	Ground Pin Current, **Note 10**	I_L = 1mA		140	200 **300**	µA µA
		I_L = 50mA		0.5	1 **2**	mA mA
		I_L = 100mA		1.7	2.5 **3.5**	mA mA
		I_L = 250mA		5	9 **12**	mA mA
$I_{GND(DO)}$	Ground Pin Current at Dropout, **Note 10**	V_{IN} = 4.5V		180	**300**	µA

Symbol	Parameter	Condition	Min	Typ	Max	Units
I_{LIMIT}	Current Limit, **Note 11**	V_{OUT} = 0V			750 **800**	mA mA
$\Delta V_{OUT}/\Delta P_D$	Thermal Regulation, **Note 12**			0.05	0.2	%/W
e_n	Output Noise Voltage (10Hz to 100kHz)	I_L = 100mA, C_L = 2.2µF		400		μV_{RMS}
		I_L = 100mA, C_L = 33µF		260		μV_{RMS}
	Reference Voltage	MIC2954-02/-07 (±0.5%)	1.220 **1.200**	1.235	1.250 **1.260**	V V
		MIC2954-03/-08 (±1%)	1.210 **1.200**	1.235	1.260 **1.270**	V V
	Reference Voltage	MIC2954-02/-07 (±0.5%), **Note 13**	**1.190**		**1.270**	V
		MIC2954-03/-08 (±1%), **Note 13**	**1.185**		**1.285**	V
	Feedback Pin Bias Current			20	40 **60**	nA nA
	Reference Voltage Temperature Coefficient, **Note 12**	MIC2954-02/-07 (±0.5%)		20		ppm/°C
		MIC2954-03/-08 (±1%)		50		ppm/°C
	Feedback Pin Bias Current Temperature Coefficient			0.1	40	nA/°C
Error Comparator						
	Output Leakage Current	V_{OH} = 30V		0.01	1.00 **2.00**	µA µA
	Output Low Voltage	V_{IN} = 4.5V, I_{OL} = 400µA		150	250 **400**	mV mV
	Upper Threshold Voltage	**Note 14**		60	40 **25**	mV mV
	Lower Threshold Voltage	**Note 14**		75	95 **140**	mV mV
	Hysteresis	**Note 14**		15		mV mV
Shutdown Input						
	Input Logic Voltage	low (on)		1.3	**0.7**	V
		high (off)	2.0			V
	Shutdown Pin Input Current	V_{SHDN} = 2.4V		30	50 **100**	µA µA
		V_{SHDN} = 30V		450	600 **750**	µA µA
	Regular Output Current in Shutdown	**Note 15**		3	10 **20**	µA µA

Notes:

1. Exceeding the absolute maximum rating may damage the device.
2. The device is not guaranteed to function outside its operating rating.
3. Devices are ESD sensitive. Handling precautions recommended.
4. $P_{D(max)} = (T_{J(max)} – T_A) ÷ θ_{JC}$. Exceeding $T_{J(max)}$ will cause thermal shutdown.
5. Thermal resistance ($θ_{JC}$) of the TO-220 package is 2.5°C/W, and 15°C/W for the SOT-223. Thermal resistance ($θ_{JC}$) of the TO-92 package is 180°C/W with 0.4" leads and 160°C/W with 0.25" leads. Thermal resistance ($θ_{JA}$) of the SOP-8 is 160°C/W mounted on a printed circuit board (See “Application Information: Thermal Calculation”).
6. Output voltage temperature coefficient is defined as the worst case voltage change divide by the total temperature range.
7. Line regulation for the MIC2954 is tested at 125°C for I_L = 1mA. For I_L = 100µA and T_J = 125°C, line regulation is guaranteed by design to0.2%. See “Typical Characteristics” for line regulation versus temperature and load current.
8. Regulation is measured at constant junction temperature using low duty cycle pulse testing. Changes in output voltage due to heating effects are covered by the thermal regulation specification.
9. Dropout Voltage is defined as the input to output differential at which the output voltage drops 100 mV below its nominal value measured at 1V differential. At very low values of programmed output voltage, the minimum input supply voltage of 2 V (2.3V over temperature) must be taken into account.
10. Ground pin current is the regulator quiescent current. The total current drawn from the source is the sum of the load current plus the ground pin current.
11. The MIC2954 features fold-back current limiting. The short circuit (V_{OUT} = 0V) current limit is less than the maximum current with normal output voltage.
12. Thermal regulation is defined as the change in output voltage at a time t after a change in power dissipation is applied, excluding load or line regulation effects. Specifications are for a 200mA load pulse at V_{IN} = 20V (a 4W pulse) for t = 10ms.
13. $V_{REF} ≤ V_{OUT} ≤ (V_{IN} – 1V)$, $2.3V ≤ V_{IN} ≤ 30V$, $100\ µA < I_L ≤ 250\ mA$, $T_J ≤ T_{J(max)}$.
14. Comparator thresholds are expressed in terms of a voltage differential at the FB pin below the nominal reference voltage measured at 6Vinput. To express these thresholds in terms of output voltage change, multiply by the error amplifier gain = V_{OUT} / V_{REF} = (R1 + R2)/R2. For example, at a programmed output voltage of 5V, the error output is guaranteed to go low when the output drops by 95mV × 5V/1.235V = 384mV. Thresholds remain constant as a percent of V_{OUT} as V_{OUT} is varied, with the dropout warning occurring at typically 5% below nominal, 7.5% guaranteed.
15. $V_{SHDN} ≥ 2V$, $V_{IN} ≤ 30\ V$, $V_{OUT} = 0$, with the FB pin connected to TAP.
16. When used in dual supply systems where the regulator load is returned to a negative supply, the output voltage must be diode clamped to ground.
17. Maximum positive supply voltage of 60V must be of limited duration (<10ms) and duty cycle (<1%). The maximum continuous supply voltage is 30V.

Typical Characteristics

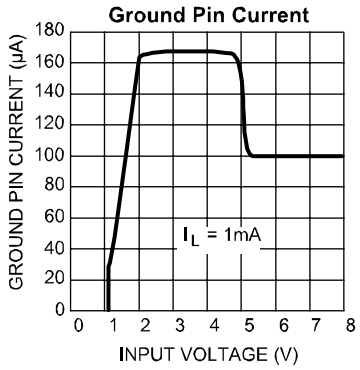

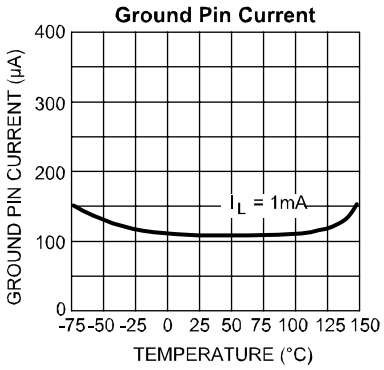

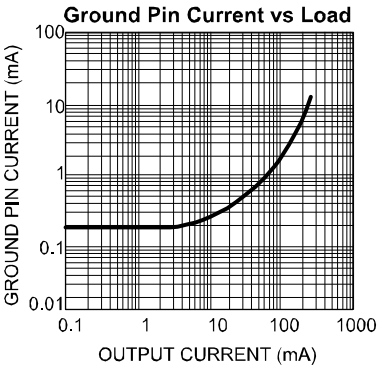

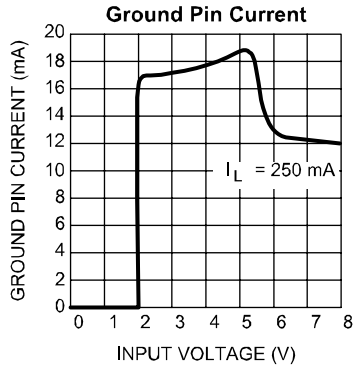

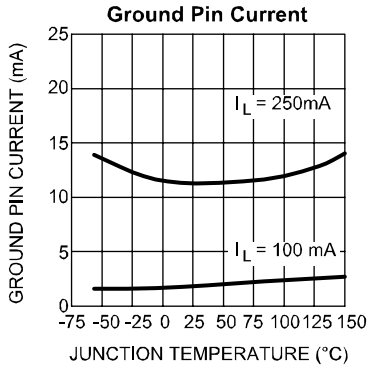

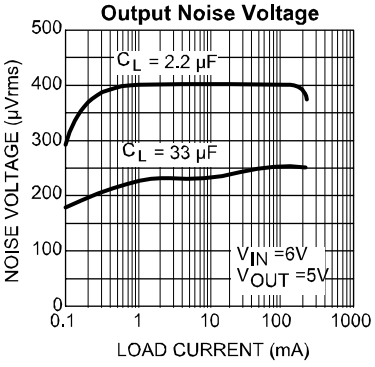

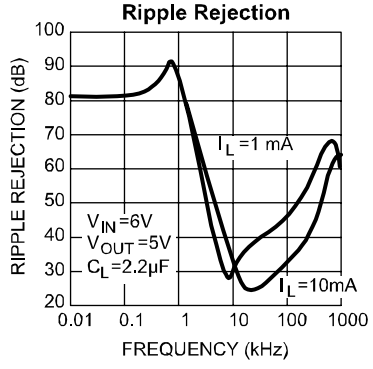

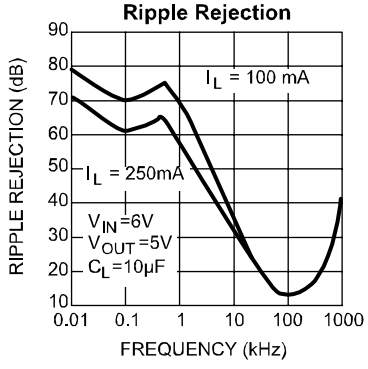

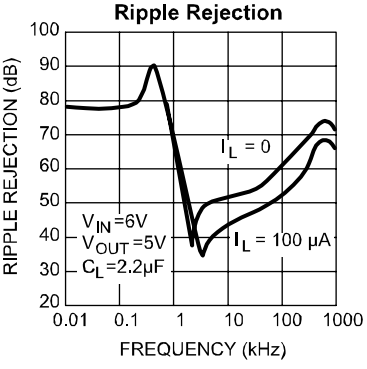

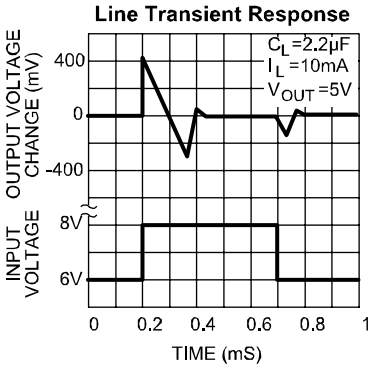

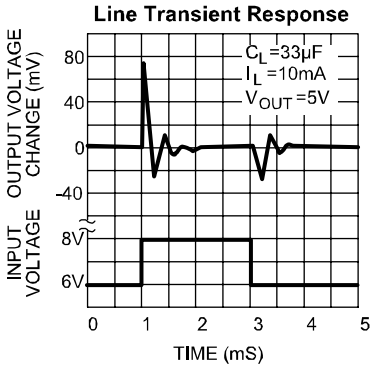

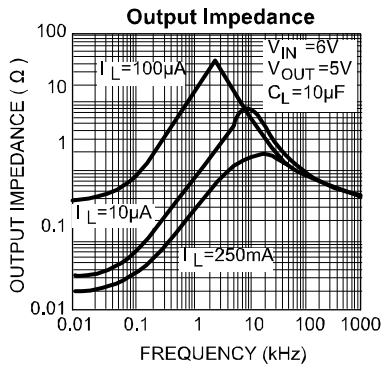

Typical Characteristics

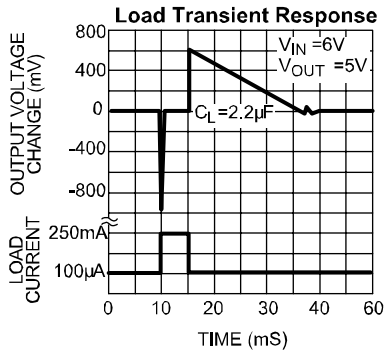

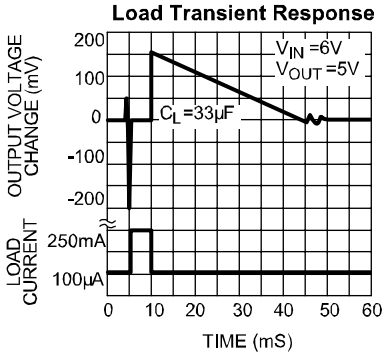

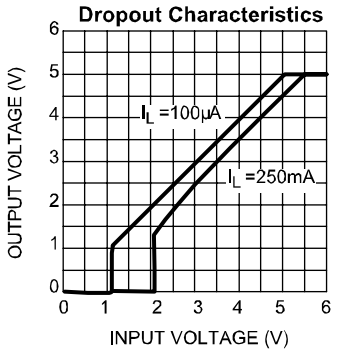

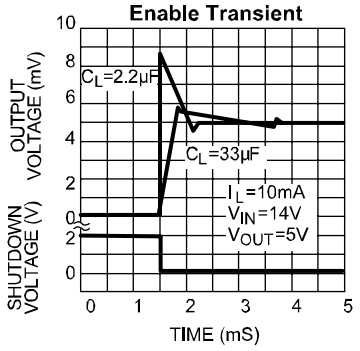

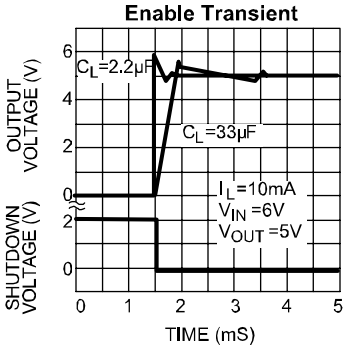

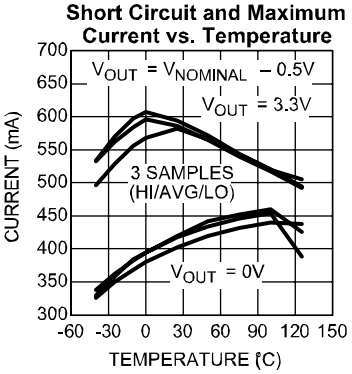

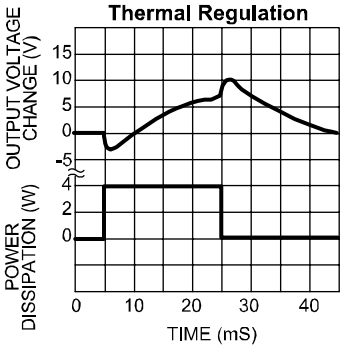

Functional Diagrams

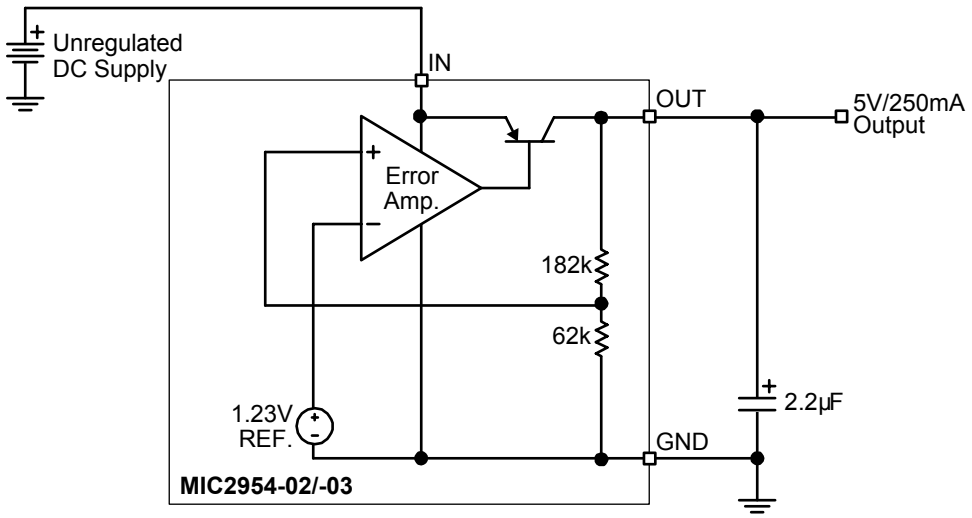

MIC2954-02 and MIC2954-03

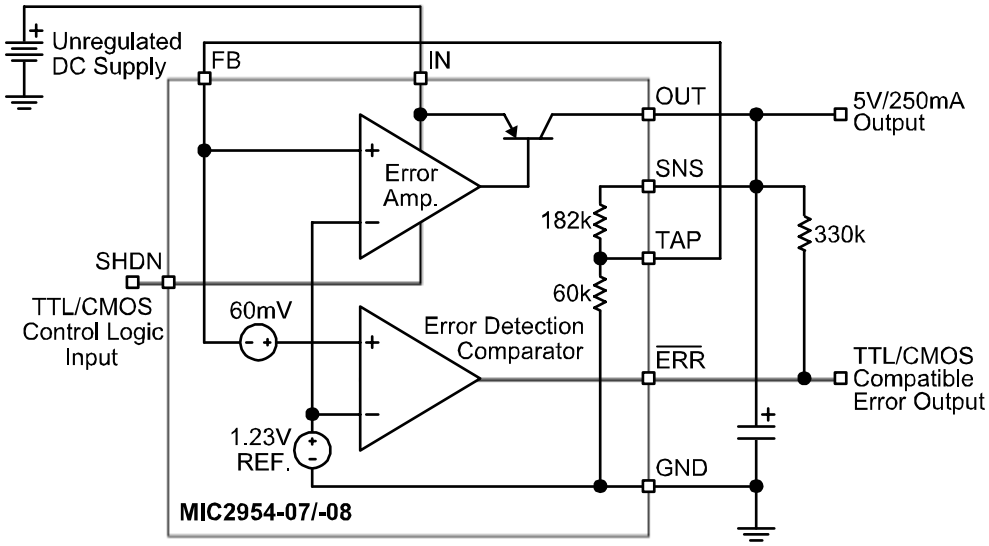

MIC2954-07 and MIC2954-08

Application Information

External Capacitors

A 2.2µF (or greater) capacitor is required between the MIC2954 output and ground to prevent oscillations due to instability. Most types of tantalum or aluminum electrolytics will be adequate; film types will work, but are costly and therefore not recommended. Many aluminum electrolytics have electrolytes that freeze at about –30°C, so solid tantalums are recommended for operation below –25°C. The important parameters of the capacitor are an effective series resistance of about 5Ω or less and a resonant frequency above 500kHz. The value of this capacitor may be increased without limit.

At lower values of output current, less output capacitance is required for output stability. The capacitor can be reduced to 0.5µF for current below 10mA or 0.15µF for currents below 1mA. Adjusting the MIC2954-07/-08 to voltages below 5V runs the error amplifier at lower gains so that more output capacitance is needed. For the worst-case situation of a 250mA load at 1.23V output (output shorted to feedback) a 5µF (or greater) capacitor should be used.

The MIC2954 will remain in regulation with a minimum load of 1mA. When setting the output voltage of the MIC2954-07/-08 version with external resistors, the current through these resistors may be included as a portion of the minimum load.

A 0.1µF capacitor should be placed from the MIC2954 input to ground if there is more than 10 inches of wire between the input and the ac filter capacitor or if a battery is used as the input.

Error Detection Comparator Output (MIC2954-07/-08)

A logic-low output will be produced by the comparator whenever the MIC2954-07/-08 output falls out of regulation by more than approximately 5%. This figure is the comparator's built-in offset of about 60mV divided by the 1.235V reference voltage. (Refer to the block diagram on page 1). This trip level remains "5% below normal" regardless of the programmed output voltage of the MIC2954-07/-08. For example, the error flag trip level is typically 4.75V for a 5V output or 11.4V for a12V output. The out of regulation condition may be due either to low input voltage, current limiting, or thermal limiting.

Figure 1 is a timing diagram depicting the /ERR signal and the regulated output voltage as the MIC2954-07/-08 input is ramped up and down. The /ERR signal becomes valid (low) at about 1.3V input. It goes high at about 5V input (the input voltage at which V_{OUT} = 4.75). Since the MIC2954-07/-08's dropout voltage is load-dependent (see curve in "Typical Characteristics"), the input voltage trip point (about 5V) will vary with the load current. The output voltage trip point (approximately 4.75V) does not vary with load.

The error comparator has an open-collector output which requires an external pull-up resistor. Depending on system requirements, this resistor may be returned to the 5V output or some other supply voltage. In determining a value for this resistor, note that while the output is rated to sink 400µA, this sink current adds to battery drain in a low battery condition. Suggested values range from 100k to 1MΩ. The resistor is not required if this output is unused.

Programming the Output Voltage (MIC2954-07/-08)

The MIC2954-07/-08 may be pin-strapped for 5V using its internal voltage divider by tying pin 1 (OUT) to pin 2 (SNS) and pin 7 (FB) to pin 6 (TAP). Alternatively, it may be programmed for any output voltage between its 1.235V reference and its 30V maximum rating. An external pair of resistors is required, as shown in Figure 3.

The complete equation for the output voltage is:

$$V_{OUT} = V_{REF}\left(1+\frac{R1}{R2}\right)+I_{FB}R1$$

where:

V_{REF} = nominal 1.235V reference voltage

I_{FB} = nominal FB pin bias current (–20nA)

The minimum recommended load current of 1µA forces an upper limit of 1.2MΩ on the value of R2, if the regulator must work with no load (a condition often found in CMOS in standby), IFB will produce a 2% typical error in V_{OUT} which may be eliminated at room temperature by trimming R1. For better accuracy, choosing R2 = 100k reduces this error to 0.17% while increasing the resistor program current to 12µA. Since the MIC2954-07/-08 typically draws 60µA at no load with pin 2 (SNS) open-circuited, this is a negligible addition.

Reducing Output Noise

In reference applications it may be advantageous to reduce the ac noise present at the output. One method is to reduce the regulator bandwidth by increasing the size of the output capacitor. This is relatively inefficient, as increasing the capacitor from 1µF to 220µF only decreases the noise from 430µV to 160µV_{RMS} for a 100kHz bandwidth at 5V output. Noise can be reduced fourfold by a bypass capacitor across R1, since it reduces the high frequency gain from 4 to unity.

Pick:

$$C_{BYPASS} \cong \frac{1}{2\pi R1 \times 200Hz}$$

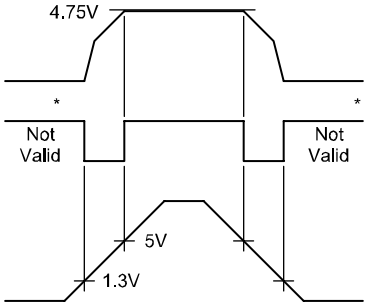

* See Application Information

Figure 1. /Error Output Timing

or about 0.01µF. When doing this, the output capacitor must be increased to 3.3µF to maintain stability. These changes reduce the output noise from 430µV to 100µV_{rms} for a100kHz bandwidth at 5V output. With the bypass capacitor added, noise no longer scales with output voltage so that improvements are more dramatic at higher output voltages.

Automotive Applications

The MIC2954 is ideally suited for automotive applications for a variety of reasons. It will operate over a wide range of input voltages with very low dropout voltages (40mV at light loads), and very low quiescent currents (75µA typical). These features are necessary for use in battery powered systems, such as automobiles. It is a "bulletproof" device with the ability to survive both reverse battery (negative transients up to 20V below ground), and load dump (positive transients up to 60V) conditions. A wide operating temperature range with low temperature coefficients is yet another reason to use these versatile regulators in automotive designs.

Thermal Calculations

Layout Considerations

The MIC2954-07BM/-08BM (8-pin surface-mount package) has the following thermal characteristics when mounted on a single layer copper-clad printed circuit board.

PC Board Dielectric Material	θ_{JA}
FR4	160°C/W
Ceramic	120°C/W

Multilayer boards having a ground plane, wide traces near the pads, and large supply bus lines provide better thermal conductivity.

Our calculations will use the "worst case" value of 160°C/W, which assumes no ground plane, minimum trace widths, and a FR4 material board.

Pad Layout (minimum recommended geometry)

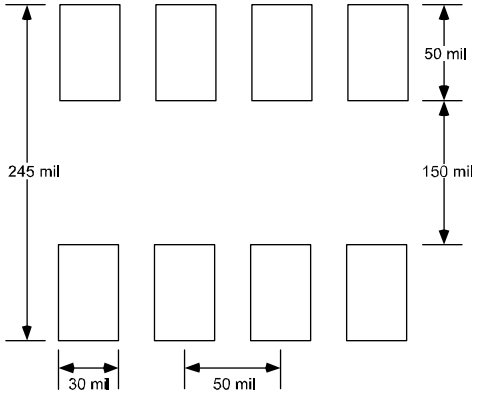

Nominal Power Dissipation and Die Temperature

The MIC2954-07BM/-08BM at a 55°C ambient temperature will operate reliably at up to 440mW power dissipation when mounted in the "worst case" manner described above. This power level is equivalent to a die temperature of 125°C, the recommended maximum temperature for nonmilitary grade silicon integrated circuits.

Schematic Diagram

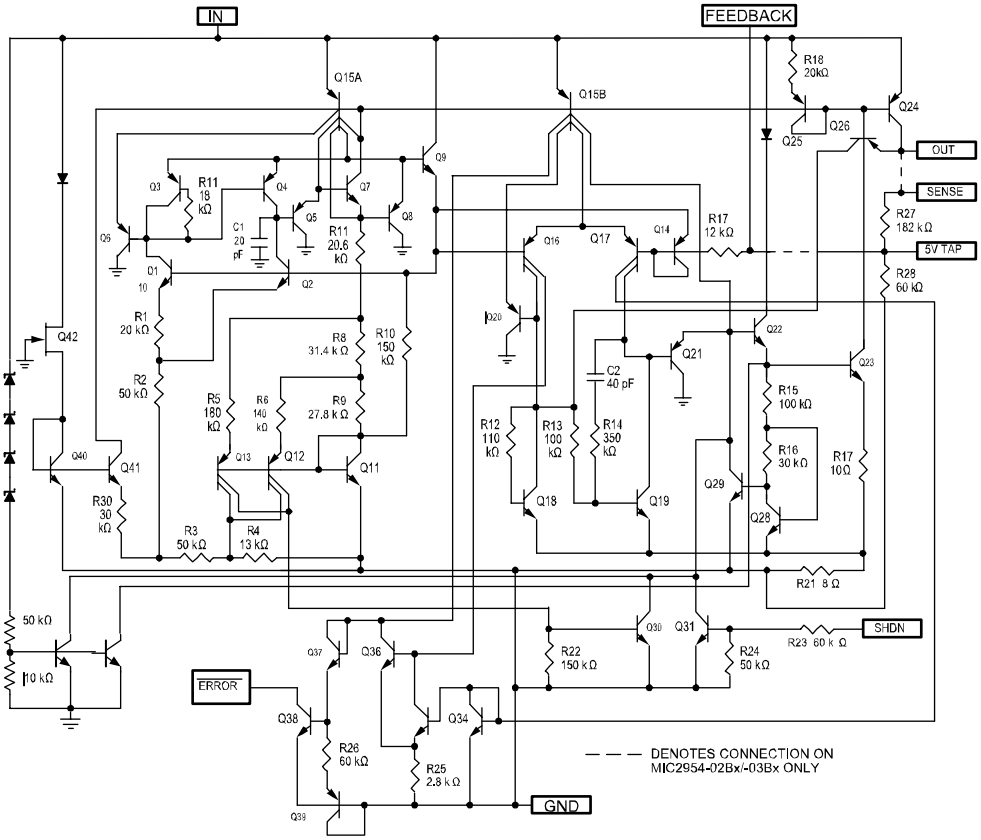

Package Information

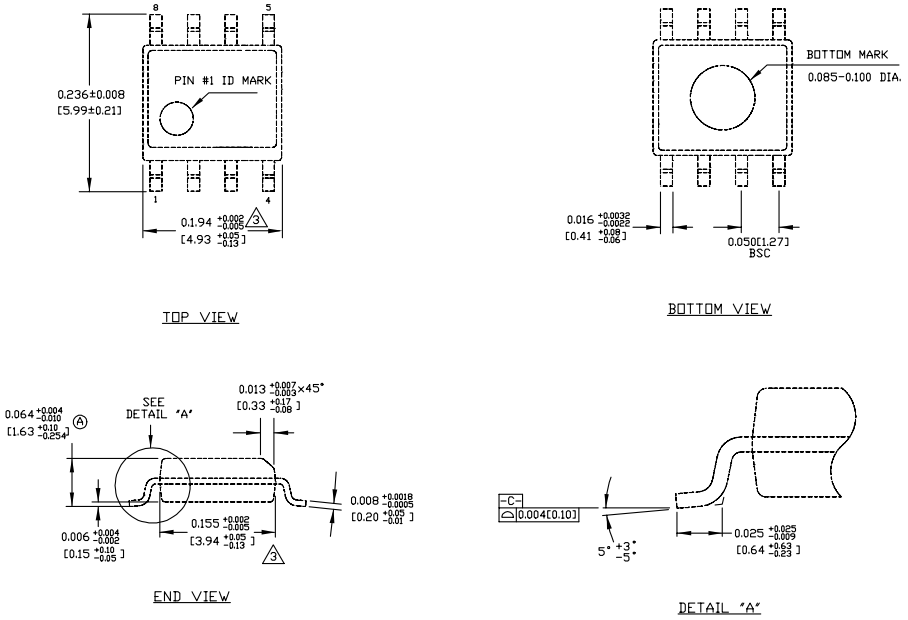

NOTES:
1. DIMENSIONS ARE IN INCHES[MM].
2. CONTROLLING DIMENSION: INCHES.
3. DIMENSION DOES NOT INCLUDE MOLD FLASH OR PROTRUSIONS, EITHER OF WHICH SHALL NOT EXCEED 0.010[0.25] PER SIDE.

8-Pin SOIC (M)

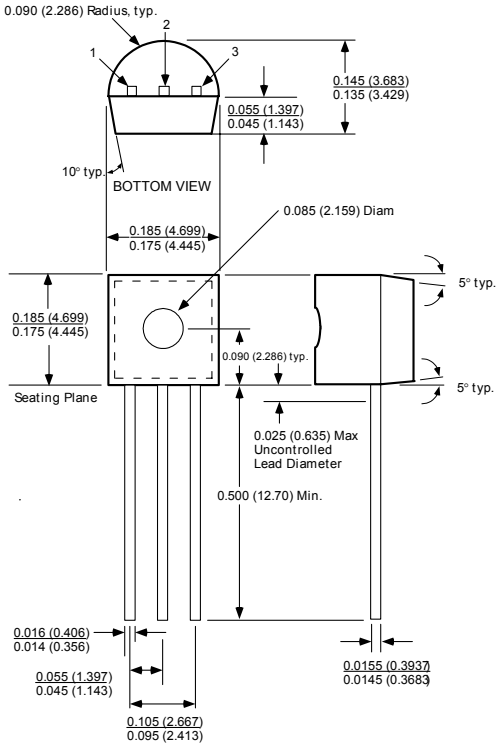

3-Pin TO-92 (Z)

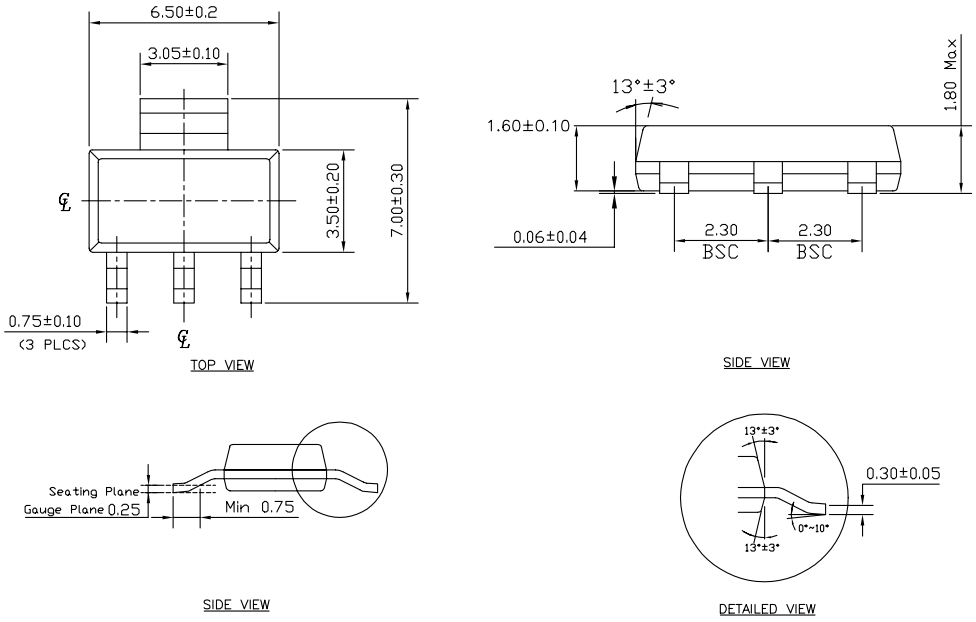

NOTE:

1. Dimensions and tolerances are as per ANSI Y14.5M, 1982.
2. Controlling dimension: Millimeters.
3. Dimensions are exclusive of mold flash and gate burr.
4. All specification comply to Jedec spec TO261 Issue C.

3-Pin SOT-223 (S)

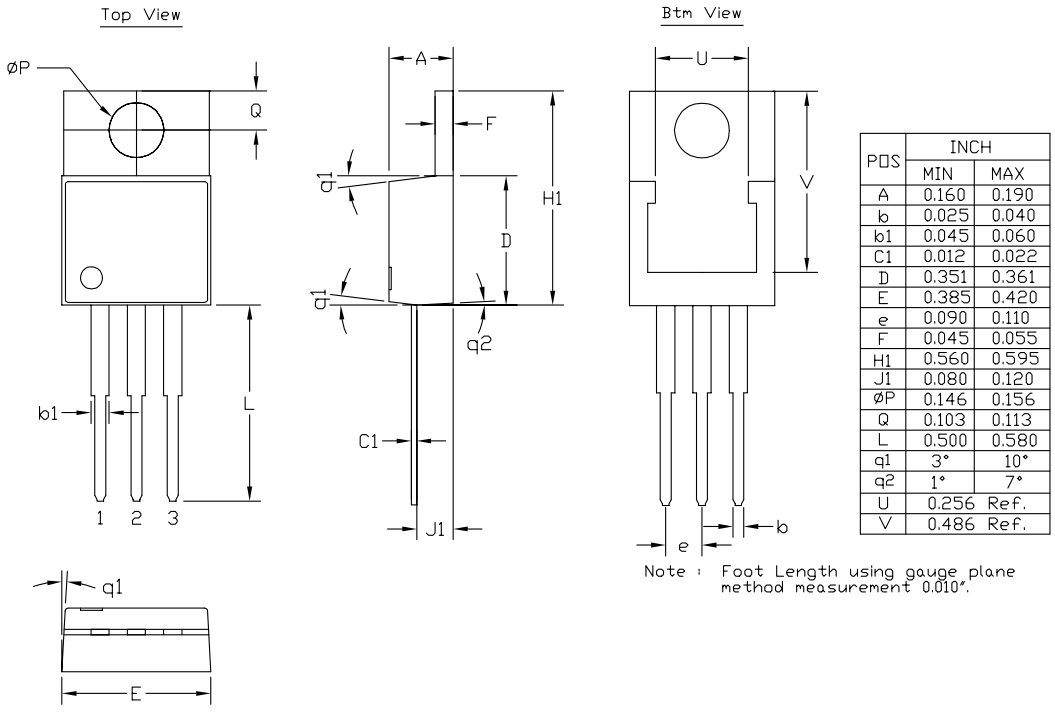

POS	INCH	
	MIN	MAX
A	0.160	0.190
b	0.025	0.040
b1	0.045	0.060
C1	0.012	0.022
D	0.351	0.361
E	0.385	0.420
e	0.090	0.110
F	0.045	0.055
H1	0.560	0.595
J1	0.080	0.120
ØP	0.146	0.156
Q	0.103	0.113
L	0.500	0.580
q1	3°	10°
q2	1°	7°
U	0.256	Ref.
V	0.486	Ref.

Note : Foot Length using gauge plane method measurement 0.010".

3-Pin TO-220 (T)

MICREL, INC. 2180 FORTUNE DRIVE SAN JOSE, CA 95131 USA
TEL +1 (408) 944-0800 FAX +1 (408) 474-1000 WEB http://www.micrel.com

The information furnished by Micrel in this data sheet is believed to be accurate and reliable. However, no responsibility is assumed by Micrel for its use. Micrel reserves the right to change circuitry and specifications at any time without notification to the customer.

Micrel Products are not designed or authorized for use as components in life support appliances, devices or systems where malfunction of a product can reasonably be expected to result in personal injury. Life support devices or systems are devices or systems that (a) are intended for surgical implant into the body or (b) support or sustain life, and whose failure to perform can be reasonably expected to result in a significant injury to the user. A Purchaser's use or sale of Micrel Products for use in life support appliances, devices or systems is a Purchaser's own risk and Purchaser agrees to fully indemnify Micrel for any damages resulting from such use or sale.

© 2001 Micrel, Incorporated.

ENTEGRECİ

Bu belge www.entegreci.com üzerinden sunulmaktadır.

Elektronik komponent tedarikinde Entegreci

Entegreci, Eskişehir merkezli, Türkiye geneline satış yapan bir elektronik komponent mağazasıdır. Entegreler (IC), mikrodenetleyiciler, transistörler, diyotlar, pasif elemanlar, konnektörler, modüller ve geliştirme kartları tek adetten seri üretim adetlerine kadar satılır. Ürün sayfalarında güncel stok durumunu, fiyatı ve datasheet bağlantısını bulabilirsiniz.

Parça koduyla arama

Üretici parça numarasını yazın; stok ve fiyatı hemen görün.

www.entegreci.com

Ürün kategorileri

Entegreden kapasitöre tüm elektronik komponent kategorileri.

Kategorilere göz atın

Üreticiler

Aradığınız üreticinin ürünlerini tek sayfada inceleyin.

Üreticileri görün

Toplu alım ve teklif

Listede olmayan ya da yüksek adetli parçalar için teklif isteyin.

Teklif isteyin

www.entegreci.com | **destek@entegreci.com** | **0850 305 90 34**

Entegreci is an online electronic components store based in Türkiye. Search by manufacturer part number to see stock, prices and datasheets for integrated circuits, microcontrollers, transistors, passive components and connectors, or request a quote for parts that are not listed.

Bu sayfa Entegreci tarafından eklenmiştir. Belgenin önceki sayfaları asıl yayıncısına aittir ve içeriği değiştirilmemiştir; en güncel sürüm için belgenin yayıncısına başvurun.