MIC37139

1.5A, Low-Voltage µCap LDO Regulator

General Description

The Micrel MIC37139 is a 1.5A low-dropout linear voltage regulator that provides a low-voltage, high-current output with a minimum of external components. It offers high precision, ultra-low dropout (500mV overtemperature), and low ground current.

The MIC37139 operates from an input of 2.25V to 6.0V. It is designed for a wide variety of applications including digital circuits requiring low-voltage at high currents (i.e., PLDs, DSPs, microcontrollers, etc.). It is available in a fixed output voltage of 1.8V, and as low as 1.5V.

Features of the MIC37139 LDO include thermal and current-limit protection, and reverse-current and reverse-battery protection. It's junction temperature range of the is from –40°C to +125°C.

Data sheets and support documentation can be found on Micrel's web site at: www.micrel.com.

Features

- 1.5A minimum guaranteed output current
- 500mV maximum dropout voltage over temperature
- Stable with ceramic or tantalum capacitor
- Wide input voltage range: V_{IN}:2.25V to 6.0V
- +1.0% initial output tolerance
- Fixed 1.8V output voltage
- Excellent line and load regulation specifications
- Thermal shutdown and current-limit protection
- Reverse-leakage protection
- Low profile SOT-223 package

Applications

- LDO linear regulator for low-voltage digital IC
- PC add-in cards
- High-efficiency linear power supplies
- SMPS post regulator
- Battery charger
- Set-top boxes
- Digital video recorders
- PowerPC® power supplies
- Multimedia and PC processor supplies

Typical Application

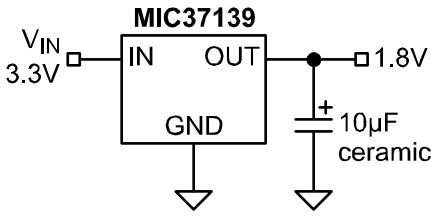

1.8V/1.5A Regulator

Super βeta is a registered trademark of Micrel, Inc
PowerPC is a registered trademark of IBM Corporation.

Ordering Information

Part Number	Output Current	Voltage*	Junction Temperature Range	Package	Lead Finish
MIC37139-1.8BS	1.5A	1.8V	–40° to +125°C	SOT-223	Standard
MIC37139-1.8YS	1.5A	1.8V	–40° to +125°C	SOT-223	Pb-Free
MIC37139-2.5YS	1.5A	2.5V	–40° to +125°C	SOT-223	Pb-Free

Note:

For other voltage options. Contact Micrel for details.

Pin Configuration

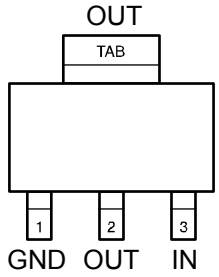

SOT-223 (S)

Pin Description

Pin Number	Pin Name	Pin Function
1	GND	Ground
2	OUT	Regulator Output
3	IN	Regulator Input

Absolute Maximum Ratings[1]

Supply Voltage (V_{IN}) 6.5V
Enable Input Voltage (V_{EN}) 6.5V
Power Dissipation ..... Internally Limited
Junction Temperature (T_J) ..... –40°C ≤ T_J ≤ +125°C
Lead Temperature (soldering, 5 sec.) ..... 260°C
Storage Temperature (T_s) ..... –65°C ≤ T_J ≤ +150°C
ESD Rating[3]

Operating Ratings[2]

Supply Voltage (V_{IN}) ..... 2.25V to 6.0V
Enable Input Voltage (V_{EN}) ..... 0V to 6.0V
Junction Temperature (T_J) ..... –40°C ≤ T_J ≤ +125°C
Maximum Power Dissipation[4]
Package Thermal Resistance
SOT-223 (θ_{JC}) ..... 50°C/W

Electrical Characteristics[5]

T_A = 25°C with V_{IN} = V_{OUT} + 1V; V_{EN} = V_{IN}; **bold** values indicate –40°C< T_J < +125°C, unless noted.

Parameter	Condition	Min	Typ	Max	Units
Output Voltage Accuracy	I_L = 10mA	–1		+1	%
	10mA < I_{OUT} < $I_{L(max)}$, V_{OUT} + 1 ≤ V_{IN} ≤ 6V	**–2**		**+2**	%
Output Voltage Line Regulation	V_{IN} = V_{OUT} +1.0V to 6.0V		0.06	0.5	%
Output Voltage Load Regulation	I_L = 10mA to 1.5A		0.2	1	%
VIN – VOUT; Dropout Voltage[6]	I_L = 750mA			**350**	mV
	I_L = 1.5A			**500**	mV
Ground Pin Current[7]	I_L = 1.5A		17	**30**	mA
Ground Pin Current in Shutdown	V_{IL} ≤ 0.5V, V_{IN} = V_{OUT} + 1V		1.0		µA
Current Limit	V_{OUT} = 0		2.25	**4**	A

Notes:

1. Exceeding the absolute maximum rating may damage the device.
2. The device is not guaranteed to function outside its operating rating.
3. Devices are ESD sensitive. Handling precautions recommended.
4. $P_{D(max)} = (T_{J(max)} – T_A) ÷ \theta_{JA}$, where θ_{JA}, depends upon the printed circuit layout. See “Applications Information.”
5. Specification for packaged product only.
6. $V_{DO} = V_{IN} – V_{OUT}$ when V_{OUT} decreased to 98% of its nominal output voltage with $V_{IN} = V_{OUT}$ +1V. For output voltages below 1.75V, dropout voltage specification does not apply due to a minimum input operating voltage of 2.25V.
7. I_{GND} is the quiescent current. $I_{IN} = I_{GND} + I_{OUT}$.

Typical Characteristics

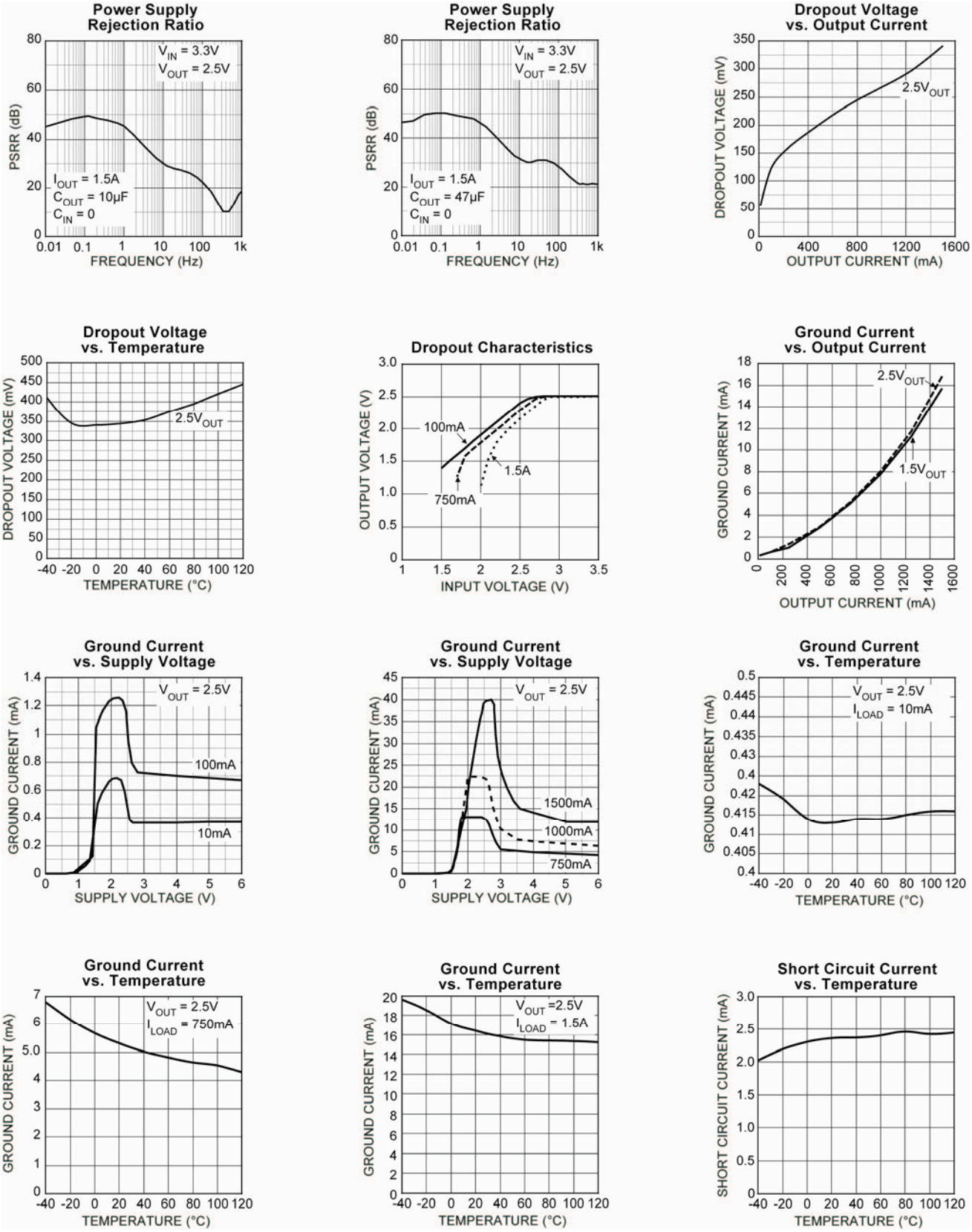

Typical Characteristics

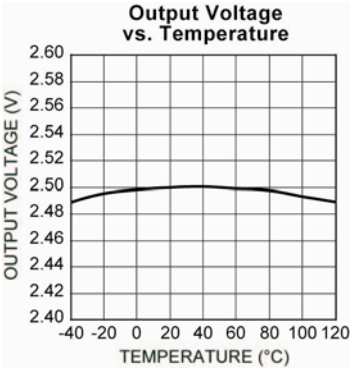

Functional Characteristics

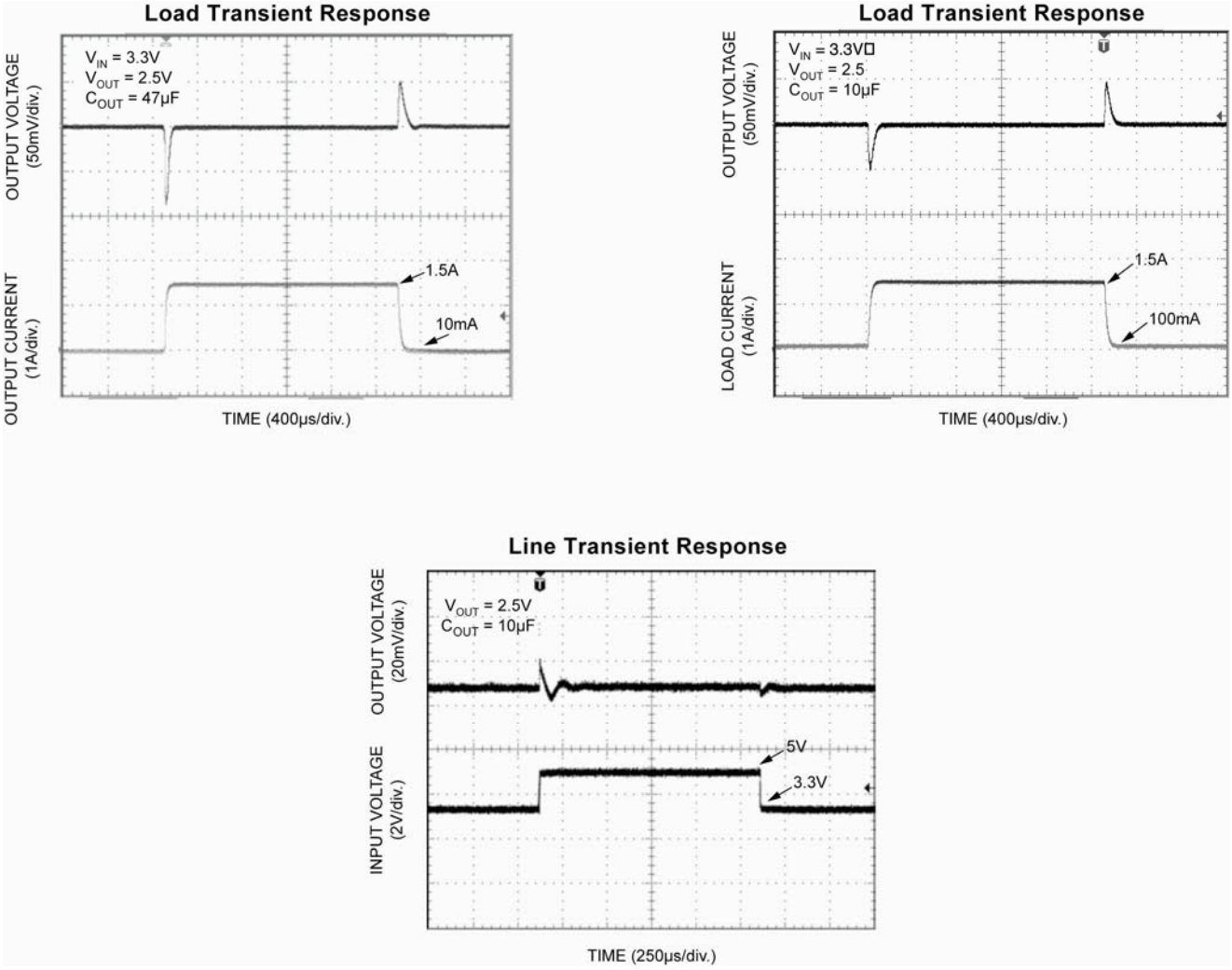

Functional Diagram

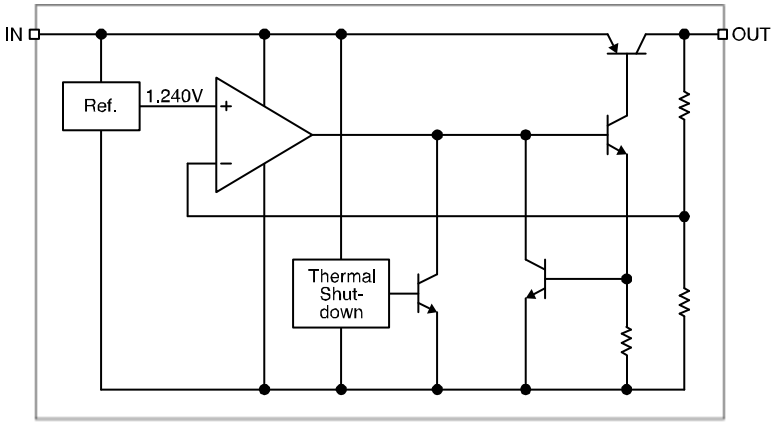

MIC37139 Fixed Regulator Block Diagram

Application Information

The MIC37139 is a high-performance low-dropout voltage regulator suitable for moderate to high-current regulator applications. Its 500mV dropout voltage at full load and overtemperature makes it especially valuable in battery-powered systems and as high-efficiency noise filters in post-regulator applications. Unlike older NPN-pass transistor designs, there the minimum dropout voltage is limited by the based-to-emitter voltage drop and collector-to-emitter saturation voltage, dropout performance of the PNP output of these devices is limited only by the low VCE saturation voltage.

A trade-off for the low-dropout voltage is a varying base drive requirement. Micrel's Super ßeta PNP® process reduces this drive requirement to only 2% to 5% of the load current.

The MIC37139 regulator is fully protected from damage due to fault conditions. Current limiting is provided. This limiting is linear; output current during overload conditions is constant. Thermal shutdown disables the device when the die temperature exceeds the maximum safe operating temperature. Transient protection allows device (and load) survival even when the input voltage spikes above and below nominal. The output structure of these regulators allows voltages in excess of the desired output voltage to be applied without reverse current flow.

Thermal Design

Linear regulators are simple to use. The most complicated design parameters to consider are thermal characteristics. Thermal design requires the following application-specific parameters:

- Maximum ambient temperature (TA)
- Output current (IOUT)
- Output voltage (VOUT)
- Input voltage (VIN)
- Ground current (IGND)

First, calculate the power dissipation of the regulator from these numbers and the device parameters from this datasheet.

$$PD = (VIN – VOUT)\ IOUT + VIN\ IGND$$

Where the ground current is approximated by using numbers from the "Electrical Characteristics" or "Typical Characteristics." Then, the heat sink thermal resistance is determined with this formula:

$$\theta SA = ((TJ(max) – TA)/ PD) – (\theta JC + \theta CS)$$

Where TJ(max) ≤ 125°C and θCS is between 0°C and 2°C/W. The heat sink may be significantly reduced in applications where the minimum input voltage is known and is large compared with the dropout voltage. Use a series input resistor to drop excessive voltage and distribute the heat between this resistor and the regulator. The low dropout properties of Micrel Super ßeta PNP® regulators allow significant reductions in regulator power dissipation and the associated heat sink without compromising performance. When this technique is employed, a capacitor of at least 1.0µF is needed directly between the input and regulator ground.

Refer to "Application Note 9" for further details and examples on thermal design and heat sink applications.

Output Capacitor

The MIC37139 requires an output capacitor for stable operation. As a µCap LDO, the MIC37139 can operate with ceramic output capacitors as long as the amount of capacitance is 47µF or greater. For values of output capacitance lower than 47µF, the recommended ESR range is 200mΩ to 2Ω. The minimum value of output capacitance recommended for the MIC37139 is 10µF.

For 47µF or greater, the ESR range recommended is less than 1Ω. Ultra-low ESR ceramic capacitors are recommended for output capacitance of 47µF or greater to help improve transient response and noise reduction at high frequency. X7R/X5R dielectric-type ceramic capacitors are recommended because of their temperature performance. X7R-type capacitors change capacitance by 15% over their operating temperature range and are the most stable type of ceramic capacitors. Z5U and Y5V dielectric capacitors change value by as much as 50% and 60%, respectively, over their operating temperature ranges. To use a ceramic chip capacitor with Y5V dielectric, the value must be much higher than an X7R ceramic capacitor to ensure the same minimum capacitance over the equivalent operating temperature range.

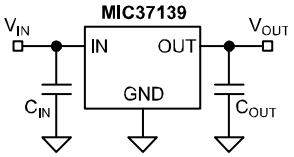

Figure 1. Capacitor Requirements

Input Capacitor

An input capacitor of 1.0µF or greater is recommended when the device is more than 4 inches away from the bulk and supply capacitance, or when the supply is a battery. Small, surface-mount chip capacitors can be used for the bypassing. The capacitor should be place within 1" of the device for optimal performance. Larger values will help to improve ripple rejection by bypassing the input to the regulator, further improving the integrity of the output voltage.

Transient Response and 3.3V to 2.5V, 2.5V to 1.8V or1.65V, or 2.5V to 1.5V Conversions

The MIC37139 has excellent transient response to variations in input voltage and load current. The device has been designed to respond quickly to load current variations and input voltage variations. Large output capacitors are not required to obtain this performance. A standard 10µF output capacitor, preferably tantalum, is all that is required. Larger values help to improve performance even further.

By virtue of its low-dropout voltage, this device does not saturate into dropout as readily as similar NPN-based designs. When converting from 3.3V to 2.5V, 2.5V to 1.8V or 1.65V, or 2.5V to 1.5V, the NPN-based regulators are already operating in dropout, with typical dropout requirements of 1.2V or greater. To convert down to 2.5V without operating in dropout, NPN-based regulators require an input voltage of 3.7V at the very least. The MIC37139 regulator will provide excellent performance with an input as low as 3.0V or 2.25V, respectively. This gives the PNP-based regulators a distinct advantage over older, NPN-based linear regulators.

Minimum Load Current

The MIC37139 regulator is specified between finite loads. If the output current is too small, leakage currents dominate and the output voltage rises. A 10mA minimum load current is necessary for proper operation.

Package Information

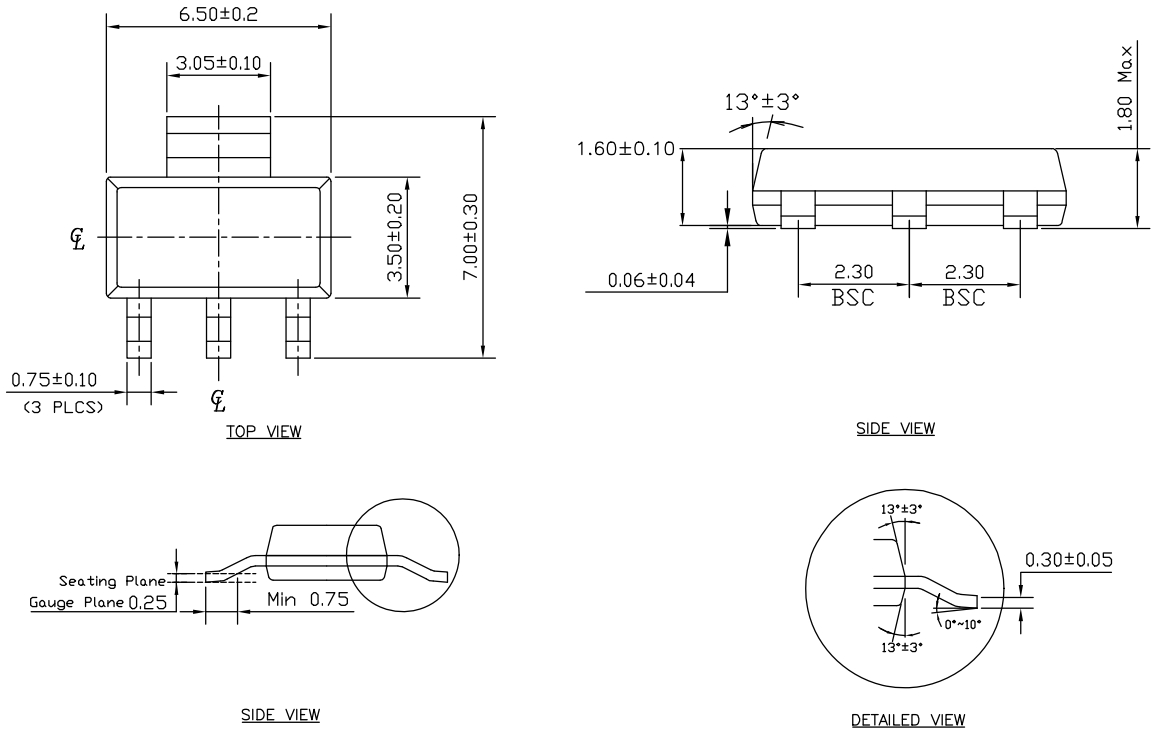

NOTE:

1. Dimensions and tolerances are as per ANSI Y14.5M, 1982.
2. Controlling dimension: Millimeters.
3. Dimensions are exclusive of mold flash and gate burr.
4. All specification comply to Jedec spec TO261 Issue C.

SOT-223 (S)

MICREL, INC. 2180 FORTUNE DRIVE SAN JOSE, CA 95131 USA
TEL +1 (408) 944-0800 FAX +1 (408) 474-1000 WEB http://www.micrel.com

The information furnished by Micrel in this data sheet is believed to be accurate and reliable. However, no responsibility is assumed by Micrel for its use. Micrel reserves the right to change circuitry and specifications at any time without notification to the customer.

Micrel Products are not designed or authorized for use as components in life support appliances, devices or systems where malfunction of a product can reasonably be expected to result in personal injury. Life support devices or systems are devices or systems that (a) are intended for surgical implant into the body or (b) support or sustain life, and whose failure to perform can be reasonably expected to result in a significant injury to the user. A Purchaser's use or sale of Micrel Products for use in life support appliances, devices or systems is a Purchaser's own risk and Purchaser agrees to fully indemnify Micrel for any damages resulting from such use or sale.

© 2003 Micrel, Incorporated.

ENTEGRECİ

Bu belge www.entegreci.com üzerinden sunulmaktadır.

Elektronik komponent tedarikinde Entegreci

Entegreci, Eskişehir merkezli, Türkiye geneline satış yapan bir elektronik komponent mağazasıdır. Entegreler (IC), mikrodenetleyiciler, transistörler, diyotlar, pasif elemanlar, konnektörler, modüller ve geliştirme kartları tek adetten seri üretim adetlerine kadar satılır. Ürün sayfalarında güncel stok durumunu, fiyatı ve datasheet bağlantısını bulabilirsiniz.

Parça koduyla arama

Üretici parça numarasını yazın; stok ve fiyatı hemen görün.

www.entegreci.com

Ürün kategorileri

Entegreden kapasitöre tüm elektronik komponent kategorileri.

Kategorilere göz atın

Üreticiler

Aradığınız üreticinin ürünlerini tek sayfada inceleyin.

Üreticileri görün

Toplu alım ve teklif

Listede olmayan ya da yüksek adetli parçalar için teklif isteyin.

Teklif isteyin

www.entegreci.com | **destek@entegreci.com** | **0850 305 90 34**

Entegreci is an online electronic components store based in Türkiye. Search by manufacturer part number to see stock, prices and datasheets for integrated circuits, microcontrollers, transistors, passive components and connectors, or request a quote for parts that are not listed.

Bu sayfa Entegreci tarafından eklenmiştir. Belgenin önceki sayfaları asıl yayıncısına aittir ve içeriği değiştirilmemiştir; en güncel sürüm için belgenin yayıncısına başvurun.