MIC5231

Micropower µCap LDO Regulator

General Description

The MIC5231 µCap low dropout voltage regulator is intended for low output current biasing applications. It features extremely low ground current, not greater than 4µA under all load and temperature conditions, making it efficient and ideal for keep-alive applications in devices such as notebook computers.

The MIC5231 offers better than 2% initial accuracy and low dropout (typically 150mV at 10mA output current). An output capacitor is not required for stable operation, decreasing cost and board space. Tiny ceramic chip capacitors may be used to improve transient response.

The MIC5231 also features a control pin which allows the regulator to be shut down when not required. Its shutdown-state draws zero current, benefiting battery-powered applications.

The MIC5231 is available in fixed output voltages of 2.75V, 3.0V, 3.3V and 5V in the small SOT-23-5 IttyBitty® package. Contact Micrel for other voltage options.

Data sheets and support documentation can be found on Micrel's web site at: www.micrel.com.

Features

- Extremely low quiescent current—***only 0.65µA***
- **No output capacitor requirement**
- Stable with ceramic or tantalum capacitors
- IttyBitty® SOT-23-5 surface-mount package
- 10mA output drive
- Low 150mV at 10mA dropout voltage
- Tight load and line regulation
- Low temperature coefficient
- Logic-level enable input

Applications

- Real-time clocks
- SRAM backup
- Cellular telephones
- Laptop, notebook and palmtop computers
- Battery-powered equipment
- Bar code scanners
- SMPS post-regulator and DC-to-DC modules

Typical Application

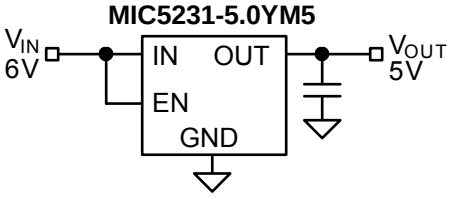

5V Linear Regulator Application

IttyBitty is a registered trademark of Micrel, Inc.

Ordering Information[1]

Part Number	Marking	Voltage	Temperature Range	Package	Lead Finish
MIC5231-2.75BM5	LM2H	2.75V	–40°C to +125°C	5-Pin SOT-23	Standard
MIC5231-2.75YM5	LM2H[2]	2.75V	–40°C to +125°C	5-Pin SOT-23[3]	Pb-Free
MIC5231-3.0BM5	LM30	3.0V	–40°C to +125°C	5-Pin SOT-23	Standard
MIC5231-3.0YM5	LM30[2]	3.0V	–40°C to +125°C	5-Pin SOT-23[3]	Pb-Free
MIC5231-3.3BM5	LM33	3.3V	–40°C to +125°C	5-Pin SOT-23	Standard
MIC5231-3.3YM5	LM33[2]	3.3V	–40°C to +125°C	5-Pin SOT-23[3]	Pb-Free
MIC5231-5.0BM5	LM50	5.0V	–40°C to +125°C	5-Pin SOT-23	Standard
MIC5231-5.0YM5	LM50[2]	5.0V	–40°C to +125°C	5-Pin SOT-23[3]	Pb-Free

Notes:

1. Other voltages available. Contact factory for details.
2. Under bar (__) symbol used to identify Pb-Free device may not be to scale.
3. SOT-23-5 is a RoHS-compliant package. Lead finish is a NiPdAu. Mold compound is Halogen free.

Pin Configuration

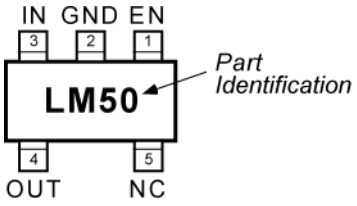

MIC5231-5.0BM5 (M5)

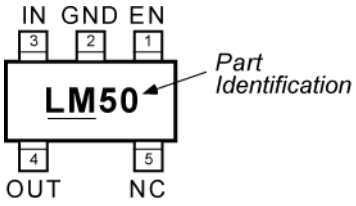

MIC5231-5.0YM5 (M5)

Pin Description

Pin Number	Pin Name	Pin Function
1	EN	Enable (Input): Active high. Logic high = enable; logic low = shutdown. Do not float.
2	GND	Ground.
3	IN	Supply Input.
4	OUT	Regulated Output.
5	NC	Not internally connected.

Absolute Maximum Ratings[1]

Supply Voltage (V_{IN}) ..... –0.6V to +14V
Lead Temperature (soldering, 5sec.) ..... 260°C
Storage Temperature (T_s) ..... –60°C to +150°C
ESD Rating[3] 2kV

Operating Ratings[2]

Supply Voltage (V_{IN}) ..... 3.5VV to 12V
Ambient Temperature (T_A) ..... –40°C to +85°C
Junction Temperature (T_J) ..... –40°C to +125°C
Thermal Resistance[4]

Electrical Characteristics

$V_{IN} = V_{OUT} + 1V$; $I_L = 100\mu A$; $C_L = 0.47\mu F$; $T_J = 25°C$, **bold** values indicate –40°C≤ T_J ≤ +125°C, unless noted.

Symbol	Parameter	Condition	Min	Typ	Max	Units
V_{OUT}	Output Voltage Accuracy	variation from nominal V_{OUT}	–2 **–3**		+2 **+3**	% %
$\Delta V_{OUT}/\Delta_T$	Output Voltage Temperature Coefficient	**Note 5**		250		ppm/°C
$\Delta V_{OUT}/V_{OUT}$	Line Regulation	V_{IN} = 6V to 12V		0.2	0.25	%
	Load Regulation	I_L = 10µA to 10mA, **Note 6**		0.2	1	%
V_{DO}	Dropout Voltage, **Note 7**	I_L = 1mA		15		mV
		I_L = 10mA		150	300	mV
I_Q	Ground Pin Current	V_{IN} = 6V, I_L = 10mA		0.65	3	µA
		V_{IN} = 12V, I_L = 10mA		1.1	**4**	µA
PSRR	Ripple Rejection	f = 100Hz, I_L = 100µA		50		dB
Enable Input						
V_{ENL}	Enable Input Voltage	V_{EN} = logic low (regulator off)		0.4	**0.18**	V
		V_{EN} = logic high (regulator on)	**1.4**			V
I_{ENL}	Enable Input Current	V_{ENL} ≤ 0.18V (regulator off)		1		nA
I_{ENH}	Enable Input Current	V_{ENH} ≥ 1.4V (regulator on)		1		nA

Notes:

1. Exceeding the absolute maximum rating may damage the device.
2. The device is not guaranteed to function outside its operating rating.
3. Devices are ESD sensitive. Handling precautions recommended.
4. The maximum allowable power dissipation at any T_A (ambient temperature) is $P_{D(max)} = (T_{J(max)} – T_A) \div \theta_{JA}$. The θ_{JC} of the MIC5231 is 130°C/W. Mounted to a standard PC board, the θ_{JA} is approximately 235°C/W.
5. Output voltage temperature coefficient is defined as the worst case voltage change divided by the total temperature range.
6. Regulation is measured at constant junction temperature using low duty cycle pulse testing.
7. Dropout voltage is defined as the input to output differential at which the output voltage drops 2% below its nominal value measured at 1Vdifferential. For outputs below 3.5V, dropout voltage is the input-to-output differential with the minimum input voltage 3.5V. Minimum input operating voltage is 3.5V.

Typical Characteristics

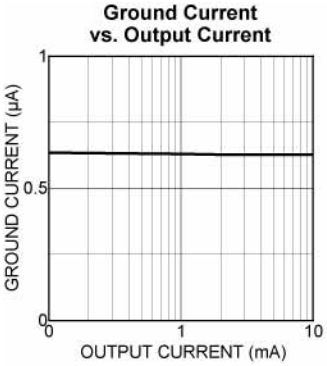

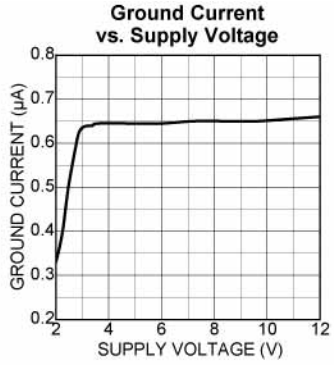

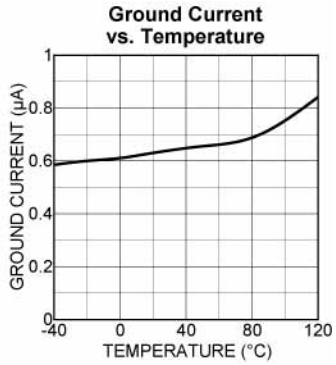

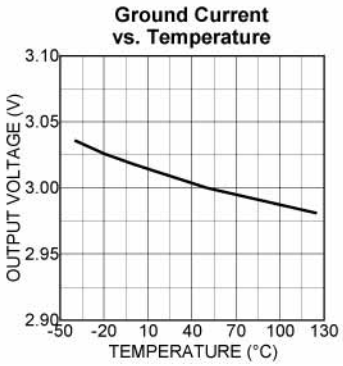

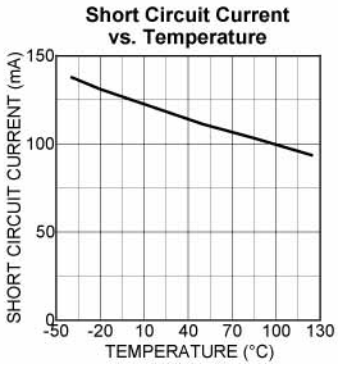

Block Diagram

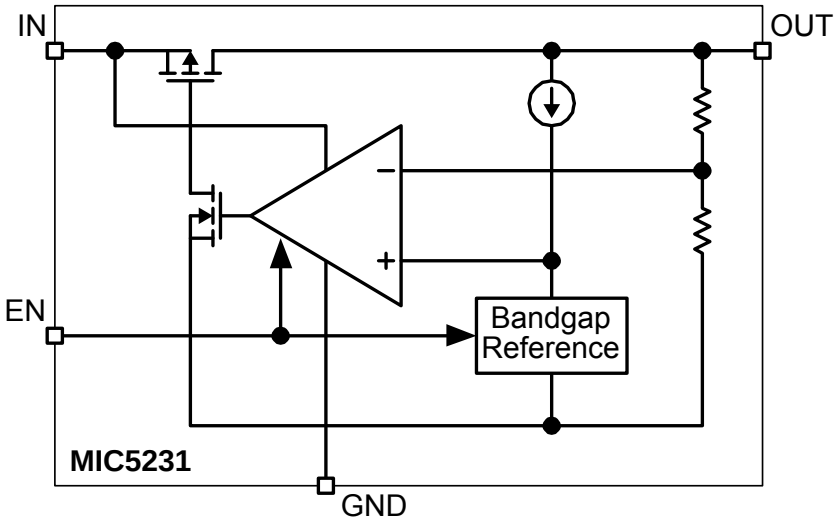

Application Information

Input Capacitor

A 0.1µF (or larger) capacitor should be placed from the IN (supply input) to GND (ground) if there is more than 20cm of wire between IN and the ac filter capacitor or if supplied from a battery.

Output Capacitors

The MIC5231 does not require an output capacitor for stability. A 1µF or larger capacitor is recommended between OUT (output) and GND to improve the regulator's transient response. A 0.1µF capacitor can be used to reduce overshoot recovery time at the expense of overshoot amplitude. The ESR (effective series resistance) of this capacitor has no effect on regulator stability, but low-ESR capacitors improve high frequency transient response. The value of this capacitor may be increased without limit, but values larger than 10µF tend to increase the settling time after a step change in input voltage or output current.

The MIC5231 has no minimum load current; it will remain stable and in regulation with no load (other than the internal voltage divider). This is especially important in real-time clock and CMOS RAM keep-alive applications.

Minimum Load Current

The MIC5231 does not require a minimum load for proper operation. This allows the device to operate in applications where very light output currents are required for keep-alive purposes. This is important for powering SRAM or Flash memory in low-power modes for handheld devices.

Safe Operating Conditions

The MIC5231 does not incorporate current limit or thermal shutdown in the design. The output pass element is approximately 15Ω, therefore, when a short occurs from the output to ground, the current is self-limited. The pass element has a positive temperature coefficient, such that when the device gets hot, the output impedance goes up, limiting the current even further. The maximum junction temperature for the device is +125°C, and it is important that this is not exceeded for any length of time.

Thermal Considerations

The MIC5231 is not intended for sourcing currents that would cause a large power loss in the device, but since it is not current limited, it is possible to source more than the rated 10mA. At this point, it is important to ensure that the die temperature does not exceed +125°C.

Power dissipation in the regulator is calculated as follows:

$$P_D = (V_{IN} - V_{OUT})I_{OUT} + V_{IN} \cdot I_{GND}$$

The MIC5231 consumes only 0.65µA over load and does not need to consider that contribution in the power dissipation equation, therefore the equation is simplified.

$$P_D = (V_{IN} - V_{OUT})I_{OUT}$$

The MIC5231, in the IttyBitty SOT-23-5 package, has a thermal resistance, junction-to-ambient, of 235°C/W. Using this number, the power dissipation capability of that package, without exceeding a +125°C junction temperature rating, can easily be calculated.

$$P_{D(MAX)} = \frac{T_{J(MAX)} - T_A}{\theta_{JA}}$$

$$P_{D(MAX)} = \frac{125°C - T_A}{235°C/W}$$

If the device is being operated at +85°C, the maximum power dissipation allowed can easily be determined.

$$P_{D(MAX)} = \frac{125°C - 85°C}{235°C/W}$$

$$P_{D(MAX)} = 170mW$$

Therefore, the device can only dissipate 170mW maximum. If the MIC5231 is powered off of a 12V source and the output voltage is 3.3V, the maximum output current can be calculated.

$$P_{D(MAX)} = (V_{IN} - V_{OUT})I_{OUT}$$

$$170mW = (12V - 3.3V)I_{OUT}$$

$$I_{OUT} = \frac{170mW}{8.7V}$$

$$I_{OUT} = 19.5mA$$

Therefore, the device can source almost 20mA at an ambient of +85°C before the die temperature exceeds +125°C.

Package Information

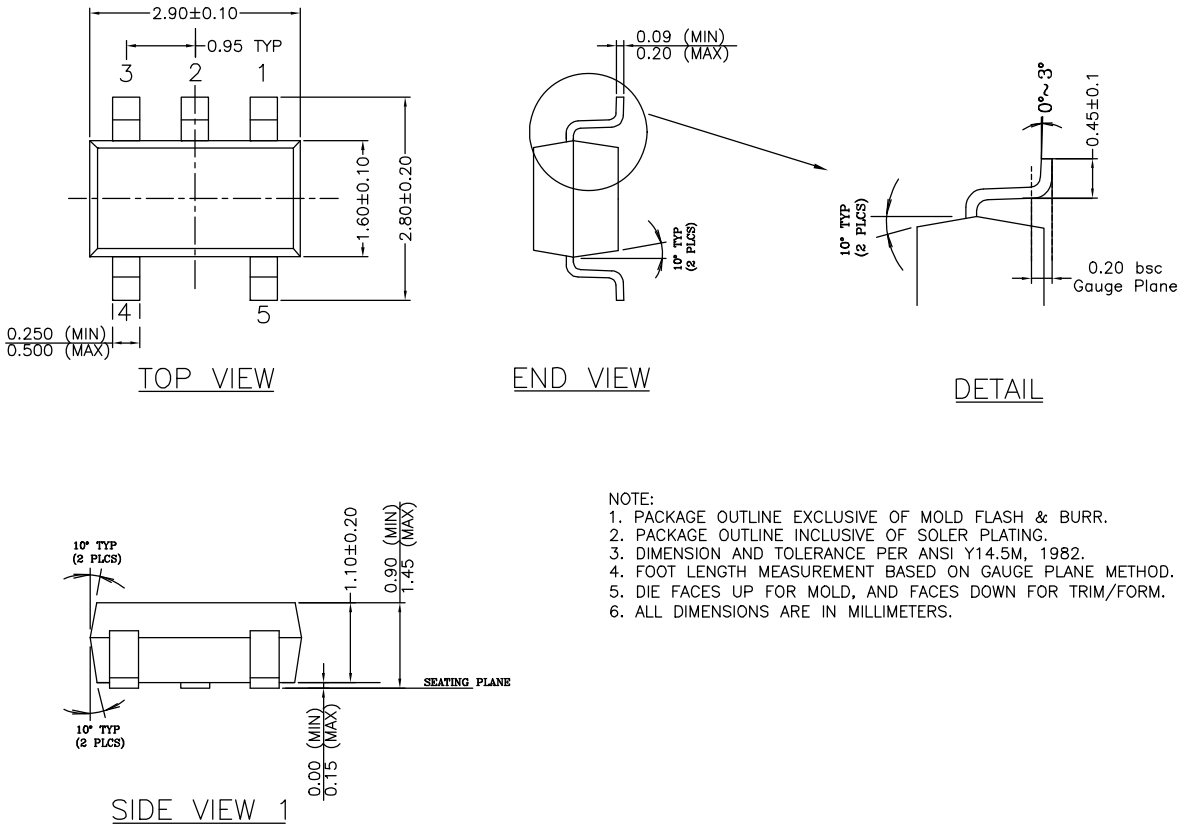

NOTE:
1. PACKAGE OUTLINE EXCLUSIVE OF MOLD FLASH & BURR.
2. PACKAGE OUTLINE INCLUSIVE OF SOLER PLATING.
3. DIMENSION AND TOLERANCE PER ANSI Y14.5M, 1982.
4. FOOT LENGTH MEASUREMENT BASED ON GAUGE PLANE METHOD.
5. DIE FACES UP FOR MOLD, AND FACES DOWN FOR TRIM/FORM.
6. ALL DIMENSIONS ARE IN MILLIMETERS.

5-Pin SOT-23 (M5)

MICREL, INC. 2180 FORTUNE DRIVE SAN JOSE, CA 95131 USA
TEL +1 (408) 944-0800 FAX +1 (408) 474-1000 WEB http://www.micrel.com

The information furnished by Micrel in this data sheet is believed to be accurate and reliable. However, no responsibility is assumed by Micrel for its use. Micrel reserves the right to change circuitry and specifications at any time without notification to the customer.

Micrel Products are not designed or authorized for use as components in life support appliances, devices or systems where malfunction of a product can reasonably be expected to result in personal injury. Life support devices or systems are devices or systems that (a) are intended for surgical implant into the body or (b) support or sustain life, and whose failure to perform can be reasonably expected to result in a significant injury to the user. A Purchaser's use or sale of Micrel Products for use in life support appliances, devices or systems is a Purchaser's own risk and Purchaser agrees to fully indemnify Micrel for any damages resulting from such use or sale.

© 2000 Micrel, Incorporated.

ENTEGRECİ

Bu belge www.entegreci.com üzerinden sunulmaktadır.

Elektronik komponent tedarikinde Entegreci

Entegreci, Eskişehir merkezli, Türkiye geneline satış yapan bir elektronik komponent mağazasıdır. Entegreler (IC), mikrodenetleyiciler, transistörler, diyotlar, pasif elemanlar, konnektörler, modüller ve geliştirme kartları tek adetten seri üretim adetlerine kadar satılır. Ürün sayfalarında güncel stok durumunu, fiyatı ve datasheet bağlantısını bulabilirsiniz.

Parça koduyla arama

Üretici parça numarasını yazın; stok ve fiyatı hemen görün.

www.entegreci.com

Ürün kategorileri

Entegreden kapasitöre tüm elektronik komponent kategorileri.

Kategorilere göz atın

Üreticiler

Aradığınız üreticinin ürünlerini tek sayfada inceleyin.

Üreticileri görün

Toplu alım ve teklif

Listede olmayan ya da yüksek adetli parçalar için teklif isteyin.

Teklif isteyin

www.entegreci.com | **destek@entegreci.com** | **0850 305 90 34**

Entegreci is an online electronic components store based in Türkiye. Search by manufacturer part number to see stock, prices and datasheets for integrated circuits, microcontrollers, transistors, passive components and connectors, or request a quote for parts that are not listed.

Bu sayfa Entegreci tarafından eklenmiştir. Belgenin önceki sayfaları asıl yayıncısına aittir ve içeriği değiştirilmemiştir; en güncel sürüm için belgenin yayıncısına başvurun.