MIC5280

25mA, 120V, Low I_Q, High PSRR LDO

General Description

The MIC5280 is a high performance low dropout regulator, offering a very low noise output with a very wide input voltage operating range, up to 120V DC input voltage.

Ideal for high input voltage applications such as industrial and telecom, the MIC5280 offers 2% initial accuracy, extremely high power supply rejection ratio (PSRR > 80dB) and low ground current (typically 31µA). The MIC5280 can also be put into a zero-off-mode current state, drawing a minuscule amount of current when disabled.

The MIC5280 has a very wide input voltage range, with a DC rating from –24V to 120V. The MIC5280 is optimized for line transient response, making it ideal for harsh environment applications.

The MIC5280 has an operating junction temperature range of –40°C to +125°C and is available in an adjustable output voltage version in a lead-free (RoHS compliant) 8-pin EPAD SOIC packaging.

Data sheets and support documentation can be found on Micrel's web site at: www.micrel.com.

Features

- Wide input voltage range: 4.5V to 120V DC
- Very low quiescent current: 31µA typical
- 25mA guaranteed output current
- Adjustable output from 1.215V to 5V
- DC voltage protection down to -24V
- Ability to withstand up to +120V DC at the input
- Stable with ceramic output capacitors
- Ultra High PSRR > 80dB for RF applications
- High output accuracy
  - ± 2% initial accuracy
  - ± 3% over temperature (–40°C to +125°C)
- Thermal shutdown and current limit protection
- Thermally efficient 8-pin EPAD SOIC package

Applications

- Industrial applications
- Remote keyless entry power supply
- Telecom applications
- Off-line power supplies

Typical Application

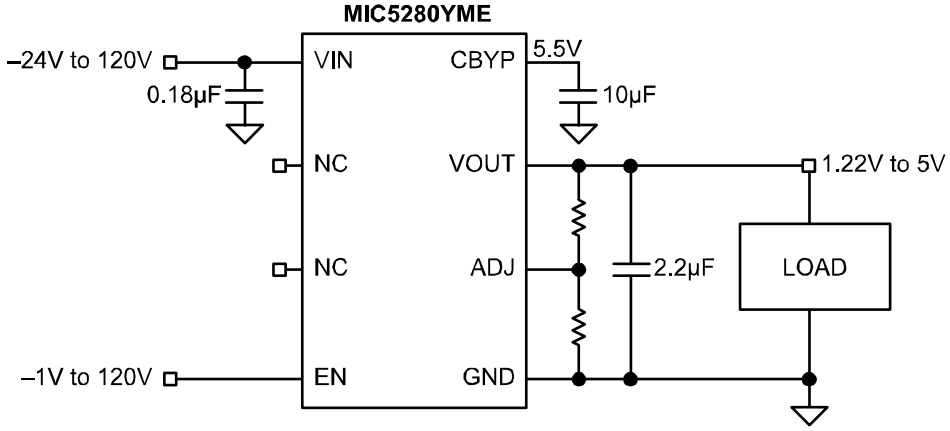

Telecom Application

Ordering Information

Part Number	Voltage	Temperature Range	Package	Lead Finish
MIC5280YME	Adj.	–40° to +125°C	8-Pin EPAD SOIC	Pb-Free

Pin Configuration

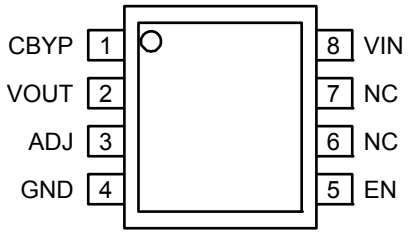

8-Pin EPAD SOIC (ME)

Pin Description

Pin Number	Pin Name	Pin Function
1	CBYP	Connect 10µF capacitor. Increases PSRR when VIN ≥ 6.5V.
2	VOUT	Regulator Output Pin. Connect 2.2µF for better stable operation.
3	ADJ	Connect pin 3 to external resistor divider to set VOUT.
4	GND	Ground.
5	EN	Enable pin. Enable Low turns part OFF, Enable High turns part ON.
6, 7	NC	Not internally connected.
8	VIN	Supply Input pin. Supply (Input): -24V to 120V input voltage.
EP	–	Exposed Pad – Connect to Ground plane trace.

Absolute Maximum Ratings[1]

Supply Voltage (V_{IN}) ..... –24V to +120V
Enable Voltage (V_{EN}) ..... –1V to +120V
Power Dissipation (P_D) ..... Internally Limited[3]
Max Reflow Temperature (per IPC/JEDEC 20°C) ..... 260°C
Junction Temperature (T_J) ..... –40°C to +150°C
Storage Temperature (T_S) ..... –65°C to +150°C
ESD Rating[4] 2kV

Operating Ratings[2]

Supply Voltage (V_{IN}) ..... 4.5V to +120V
Enable Voltage (V_{EN}) ..... 0V to +120V
Junction Temperature (T_J) ..... –40°C to +125°C
Junction Thermal Resistance
EPAD SOIC-8 (θ_{JA}) ..... 41°C/W

Electrical Characteristics[5]

V_{IN} = 12V; V_{EN} = 2V; C_{OUT} = 2.2µF; C_{BYP} = 10µF; I_{OUT} = 100µA; T_J = 25°C, **bold** values indicate –40°C to +125°C, unless noted.

Parameter	Condition	Min	Typ	Max	Units
Output Voltage Accuracy	Variation from nominal V_{OUT}	–2		+2	%
	Variation from nominal V_{OUT}, –40°C to +125°C	**–3**		**+3**	%
ADJ Pin Voltage			1.219		V
Line Regulation[6]	ΔV_{IN} = 6.5V to 120V	**–0.5**	0.04	**0.5**	%
Load Regulation[7]	I_{OUT} = 100µA to 25mA	**–0.5**	0.2	**0.5**	%
Dropout Voltage	I_{OUT} = 100µA; V_{IN} = 4.5V; Adjust Pin = 0V	0	430	**700**	mV
	I_{OUT} = 10mA; V_{IN} = 4.5V; Adjust Pin = 0V	0	800	**1000**	mV
	I_{OUT} = 25mA; V_{IN} = 4.5V; Adjust Pin = 0V	0	1100	**1500**	mV
Ground Pin Current	I_{OUT} = 100µA	0	31	**50**	µA
	I_{OUT} = 25mA	0	260	**400**	µA
Ground Pin Current in Shutdown	$V_{EN} \le$ 0.3V	0	0.02	1	µA
	$V_{EN} \le$ 0.3V, –40°C to +125°C	0		**5**	µA
Ripple Rejection	f = up to 1kHz		80		dB
Current Limit	V_{OUT} = 0V; V_{IN} = 4.5V	40	70		mA
	V_{OUT} = 0V; V_{IN} = 14.4V		70	100	mA
I_{DD} Reverse Battery	V_{IN} = –24V; V_{EN} = 0.3V	0.4	0.03	50	µA
I_{OUT} Reverse Current	V_{IN} = 0V; V_{OUT} = 5V; V_{EN} = 0.3V		3	10	µA
ADJ Pin Current			3.3		nA
Output Voltage Noise			120		μV_{RMS}
Enable Input					
Enable Input Voltage	Logic Low			**0.3**	V
	Logic High	**2.0**			V
Enable Input Current	$V_{EN} \le$ 0.3V; V_{IN} = 12V	0	0.02	**1**	µA
	$V_{EN} \ge$ 2.0V; V_{IN} = 12V	0	0.12	**1**	µA
	V_{IN} = 4.5V; V_{EN} = 120V	0	0.15	**10**	µA
Turn-on Time	C_{OUT} = 2.2µF; I_{OUT} = 25mA	0.1	1		ms

Notes:

1. Exceeding the absolute maximum rating may damage the device.
2. The device is not guaranteed to function outside its operating rating.
3. The maximum allowable power dissipation of any T_A (ambient temperature) is $P_{D(max)} = (T_{J(max)} – T_A) / \theta_{JA}$. Exceeding the maximum allowable power dissipation will result in excessive die temperature, and the regulator will go into thermal shutdown.
4. Devices are ESD sensitive. Handling precautions recommended. Human body model, 1.5kΩ in series with 100pF.
5. Specification for packaged product only.
6. Line regulation is a percentage of V_{OUT}.
7. Regulation is measured at constant junction temperature using low duty cycle pulse testing; changes in output voltage due to heating effects are covered by the thermal regulation specification.

Typical Characteristics

Power Supply Rejection Ratio

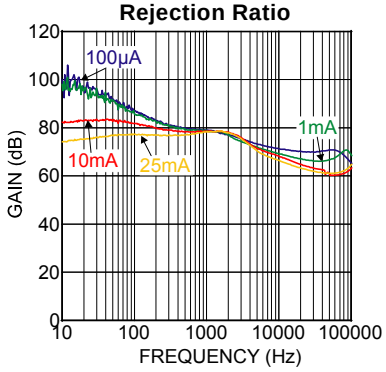

Output Voltage vs. Input Voltage

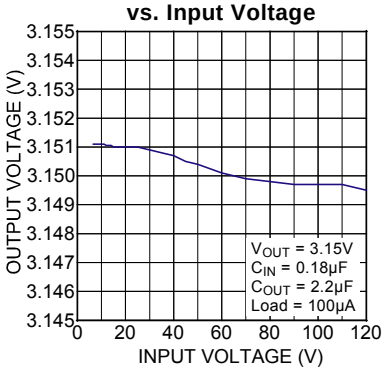

Output Voltage vs. Load Current

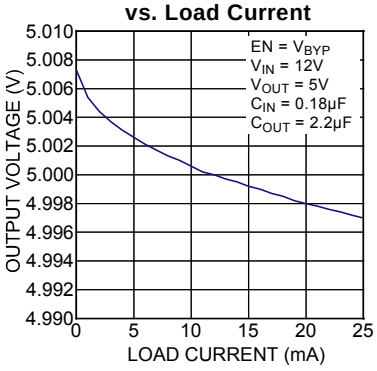

Feedback Voltage vs. Temperature

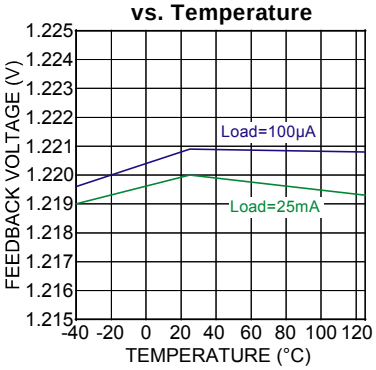

Ground Current vs. Output Current

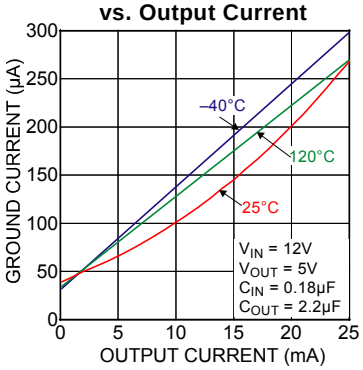

Ground Current vs. Temperature

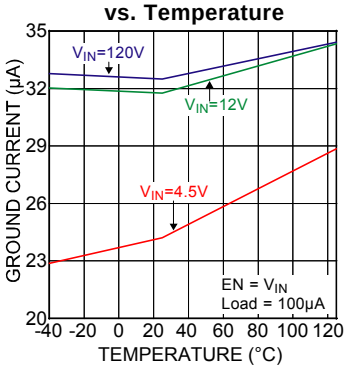

Dropout Voltage vs. Output Current

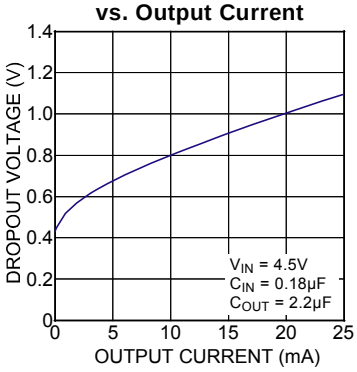

Dropout Voltage vs. Temperature

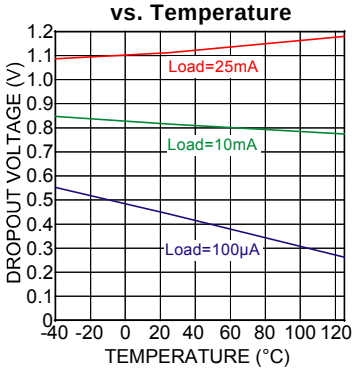

Current Limit vs. Input Voltage

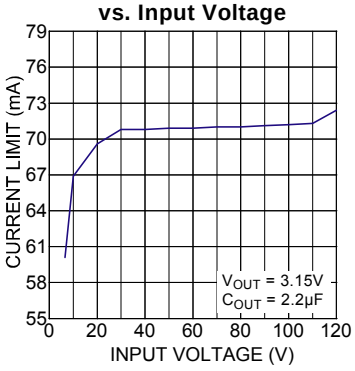

Current Limit vs. Temperature

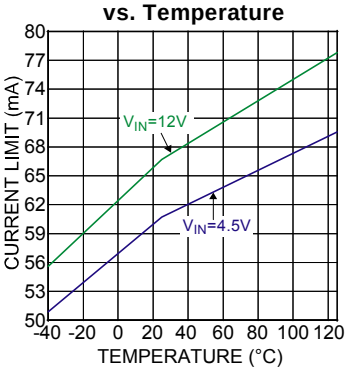

Adjust Pin Current vs. Temperature

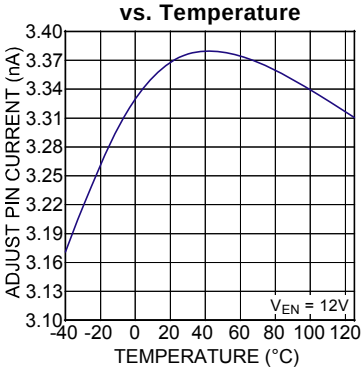

Enable Threshold vs. Temperature

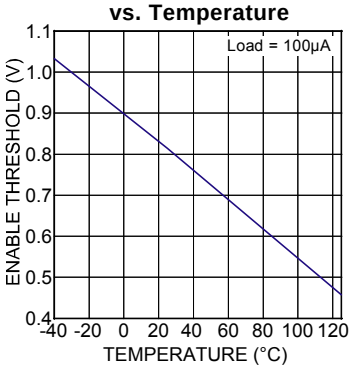

Typical Characteristics (continued)

Enable Current vs. Enable Voltage

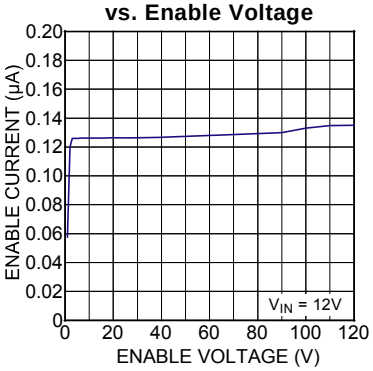

Enable Current vs. Temperature

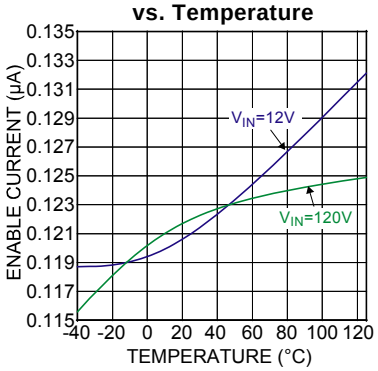

Low Voltage Behavior

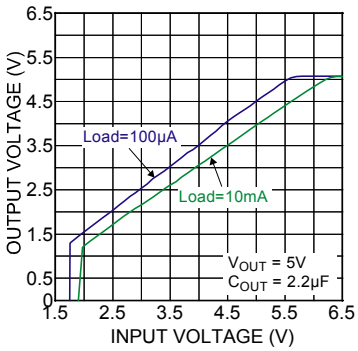

V_{IN} Current vs. Input Voltage

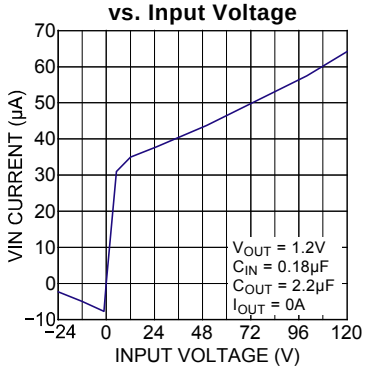

Output Noise Spectral Density

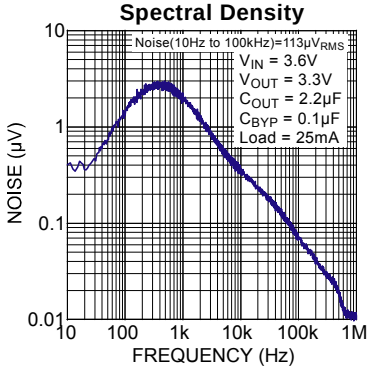

Functional Characteristics

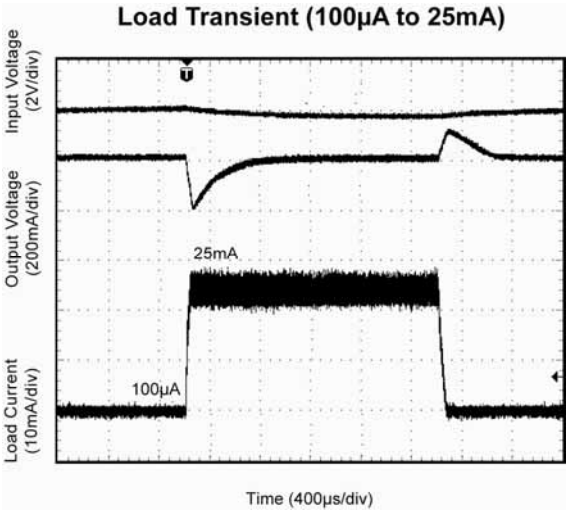

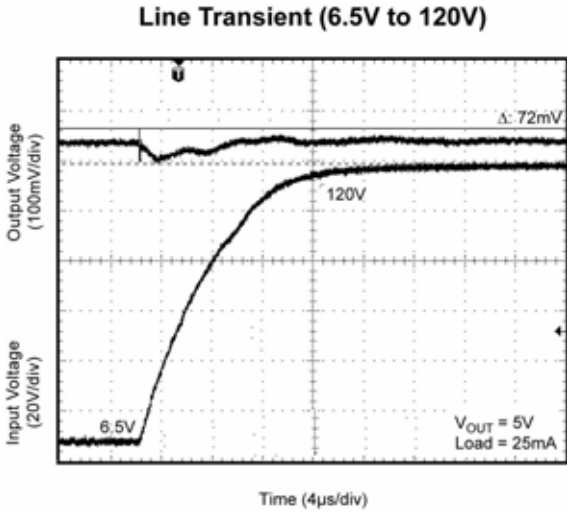

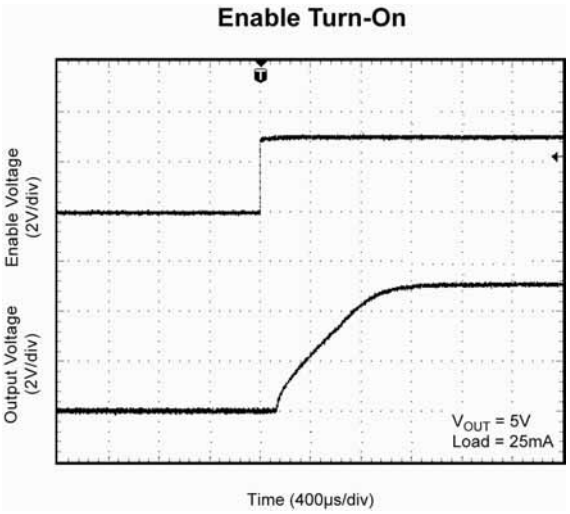

Functional Diagram

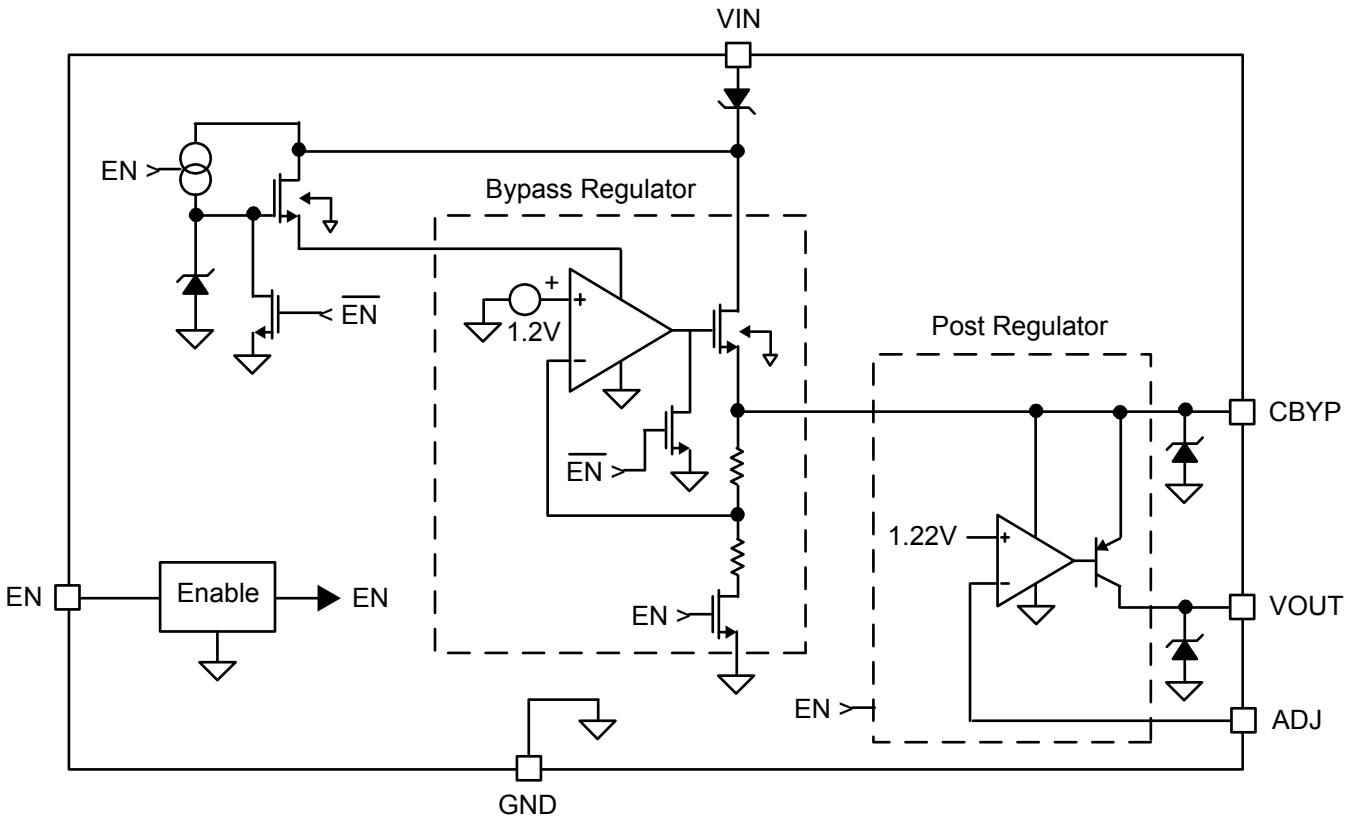

Functional Description

MIC5280 is a high performance linear regulator which accepts wide input operating range 4.5V to 120V. This allows the use in harsh environments. The input can surge from 0V to 120V within a millisecond. The first stage bypass regulator isolates output from this input by producing an intermediate head voltage which is a input-to-post regulator. This post regulator gives the control to regulate the required output voltage. The output voltage is adjustable from 1.22V to 5V.

VIN Pin

V_{IN} pin is the supply input pin. A 0.18µF or larger capacitor with proper voltage rating is recommended for filtering the input voltage variations and noise on the input voltage. This capacitor should be close to the V_{IN} and GND pins.

CBYP Pin

The Bypass pin is the output of the Bypass regulator and the input of the post regulator. By connecting a capacitor from the C_{BYP} pin-to-GND, a greater stability and a much higher PSRR is achieved. A 10µF ceramic capacitor is recommended and this significantly decreases V_{OUT} noise and perturbations due to line transients. When the MIC5280 is enabled, the Bypass pin voltage is regulated at 5.5V. To maintain 5.5V regulation and high PSRR, the V_{IN} must be no lower than 6.5V. For V_{IN} less than 6.5V while in dropout, the PSRR is reduced.

EN Pin

EN pin is a logic level enable input which turns MIC5280 on/off. Drive EN pin level high to turn the device ON and drive EN pin low to keep the device in shutdown mode. In shutdown mode the MIC5280 draws typically 20nA from the input supply. EN pin can withstand 120V, allowing EN always connected to input supply for always-ON operation.

ADJ Pin

ADJ pin gives the flexibility to set the output voltage to the requirement from 1.22V to 5V. Use a resistor divider from output and connect to ADJ pin, internal reference is typically 1.219V.

GND Pin

This GND pin provides the ground for all the electrical connections. MIC5280 has exposed pad underneath the package which should be connected to ground. If this exposed pad is connected to wide ground plane it would improve the thermal performance of MIC5280.

NC Pins

There are two NC pins on the package which are not connected internally.

VOUT Pin

The V_{OUT} pin is the regulated output of the post regulator. When the MIC5280 is enabled, V_{OUT} regulates at a fixed voltage, when disabled, V_{OUT} is high impedance. A 2.2µF or larger ceramic capacitor must be connected to V_{OUT} pin-to-ground.

Application Information

MIC5280 is a linear regulator with a wide operating range of input voltage 4.5V to 120V. The input can go down to –24V without any damage to the device. This feature gives the advantage to use in harsh environment applications such as remote keyless entry and telecom applications.

Thermal Protection

MIC5280 has internal thermal shutdown to protect from over dissipation and failure. When the junction temperature exceeds +160°C, an internal thermal sensor signals the shutdown logic to turn off the pass transistor and allows the IC to cool. The thermal sensor turns the pass transistor on again after the junction temperature cools by 10°C. This results in a cycled output during continuous thermal overload conditions. The recovery from thermal shutdown is smooth without any overshoot. For continuous operation, do not exceed the maximum junction temperature rating of +125°C.

Current Limit

MIC5280 has a current limit protection to protect it from over loads. The recovery from current limit protection is smooth without any overshoots. The output can be shorted to GND for an indefinite period of time without damage to the device. During a short circuit, the power dissipated across the pass transistor can quickly heat the device. When the die temperature reaches +160°C, the MIC5280 shut down and automatically restart after the die temperature cools by 10°C. This results in a pulsed output operation.

CBYP Output when Enable is Low

When the Enable is low and the MIC5280 is disabled, while V_{IN} voltage is present, the CBYP pin voltage is typically 4.5V, even for V_{IN} as high as 120V. The Bypass regulator although maintaining the Bypass voltage, requires no current from V_{IN} other than leakage current.

Bypass Capacitor

A 10µF capacitor should be connected from bypass pin to ground to maintain stability of the bypass regulator. The voltage rating of the capacitor must be 8V or higher. Low ESR ceramic capacitors work well. Although a 1µF capacitor maintains good AC power supply rejection, higher capacitance values will enhance AC power supply rejection.

PSRR

Power Supply Rejection Ratio is the measure of a V_{OUT} signal caused by a signal on the V_{IN} pin. The ratio of V_{IN}/V_{OUT} in dB is PSRR. The MIC5280's PSRR from 0Hz to 1kHz exceeds 80dB.

Output Voltage Setting

For this adjustable regulator, V_{OUT} is programmable from 1.22V to 5.0V. A 2.2µF or larger capacitor must be connected to V_{OUT} pin-to-ground to maintain stability. This capacitor value can be increased without bound. The V_{OUT} capacitor can have an ESR of 0Ω. When V_{IN} is lower than V_{OUT}, V_{OUT} is not pulled low by V_{IN}. A small current, typically 4µA, will sink into V_{OUT} pin.

The output voltage is controlled by the feedback resistors (R1 and R2) and can be calculated as follows:

$$V_{OUT} = V_{REF} \cdot \left(\frac{R1}{R2} + 1 \right)$$

$$V_{REF} = 1.219V$$

The evaluation board is initially adjusted to 5V, but can easily be modified by removing R1 and replacing it with the value that yields the desired output voltage.

$$R1 = R2 \cdot \left(\frac{V_{OUT}}{V_{REF}} - 1 \right)$$

Ensure the output voltage selected does not exceed 5V.

Enable Pin

The voltage on enable pin EN of MIC5280 could vary from –1V to 120V. So enable pin EN of MIC5280 can be used in a different configuration as the application dictates.

If the MIC5280 needs to be always enabled then simply connect the EN pin to CBYP pin, as shown in Figure 1. Then whenever V_{IN} has a supply voltage output is developed. Input can swing from –24V to 120V.

One can also connect EN pin through 100kΩ resistor to input as shown in Figure 2 to achieve the same result.

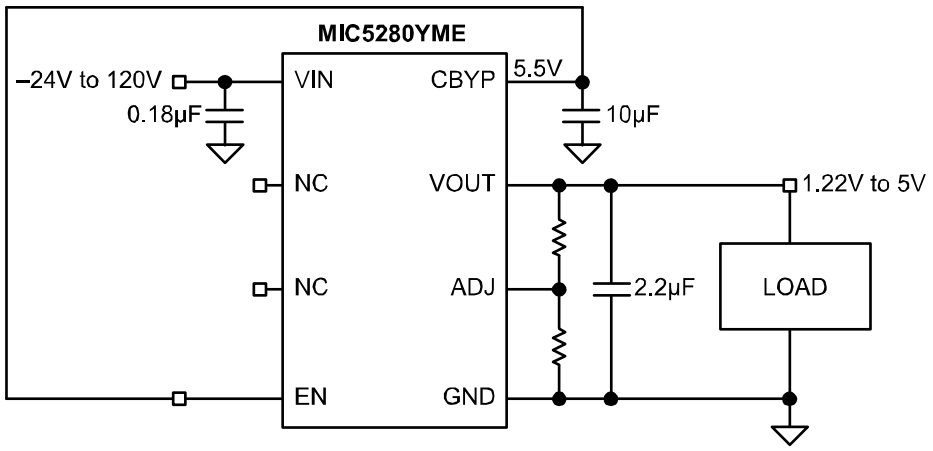

Figure 1. MIC5280 EN Always Enabled

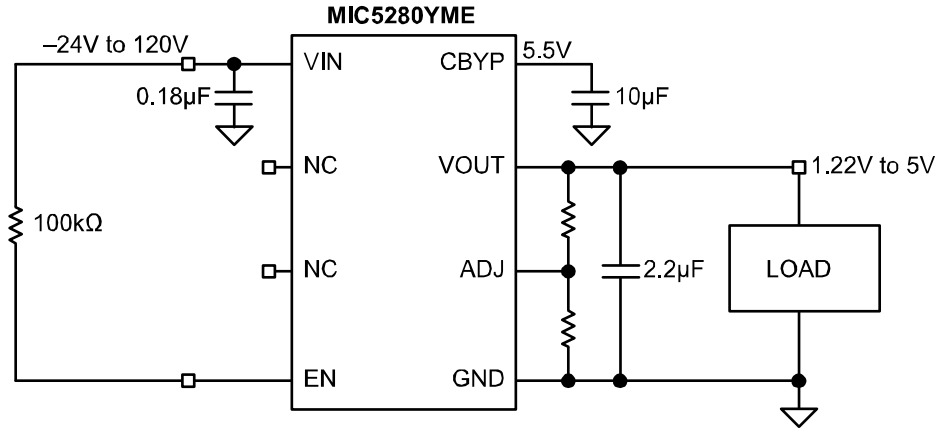

Figure 2. Enable Connected to V_{IN} Application

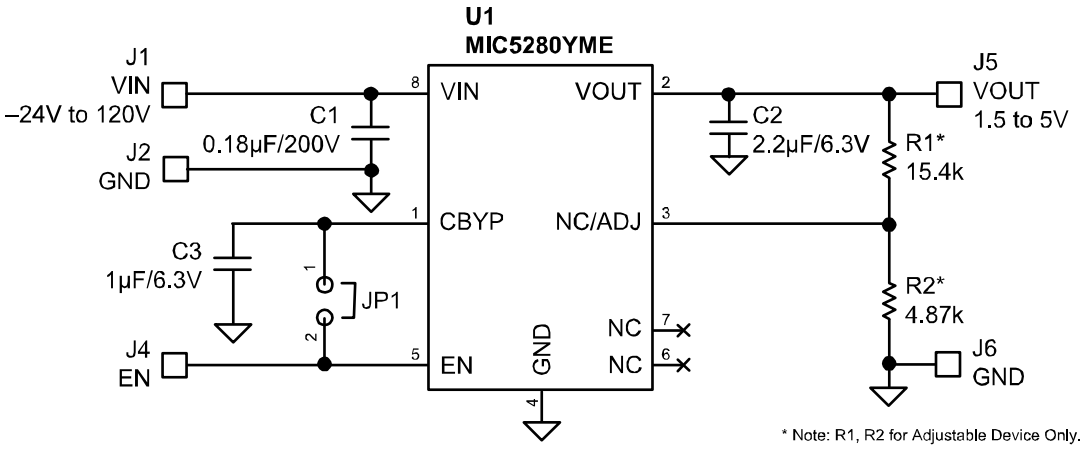

Bill of Materials

Item	Part Number	Manufacturer	Description	Qty.
C1	NMC-P1210X7R184K200TRPLPF	NIC[1]	Capacitor, 0.18µF, 200V, Size 1210	1
	C1812C184K2RAC	Kemet[2]	Capacitor, 0.18µF, 200V, Size 1812	
	VJ1812Y184KXC	Vishay[3]		
C2	C1608X5R1A225K	TDK[4]	Capacitor, 2.2µF,10V, X5R, Size 0603	1
	0603C225MAT	AVX[5]	Capacitor, 2.2µF,6.3V, X7R, Size 0603	
	GRM188R60J225KE19D	Murata[6]	Capacitor, 2.2µF,6.3V, X5R, Size 0603	
C3	C1608X5R0J105K	TDK[4]	Capacitor, 1µF,6.3V, X5R, Size 0603	1
	VJ0603G105KXYPW1BC	Vishay[3]		
	GRM188R60J105KA01D	Murata[6]		
R1	CRCW060315R4FKEYE3	Vishay[3]	Resistor, 15.4k, 1%, 1/16W, Size 0603	1
R2	CRCW06034R87FKEYE3	Vishay[3]	Resistor, 4.8k, 1%, 1/16W, Size 0603	1
U1	**MIC5280YME**	**Micrel, Inc.[7]**	**25mA, 120V, Low I_Q, High PSRR LDO**	**1**

Notes:

1. NIC: www.nic.com
2. Kemet Electronics: www.ketem.com
3. Vishay: www.vishay.com
4. TDK: www.tdk.com
5. AVX: www.avx.com
6. Murata: www.murata.com
7. **Micrel, Inc.: www.micrel.com**

PCB Layout Recommendations

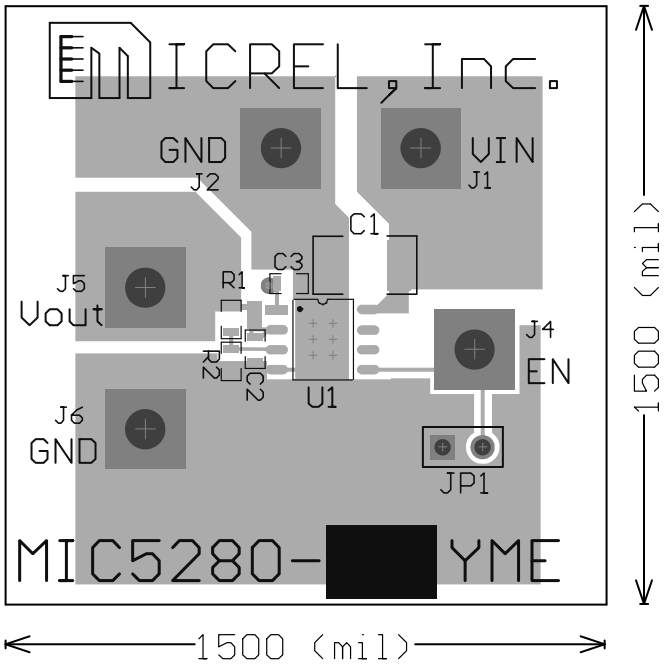

Top Layer

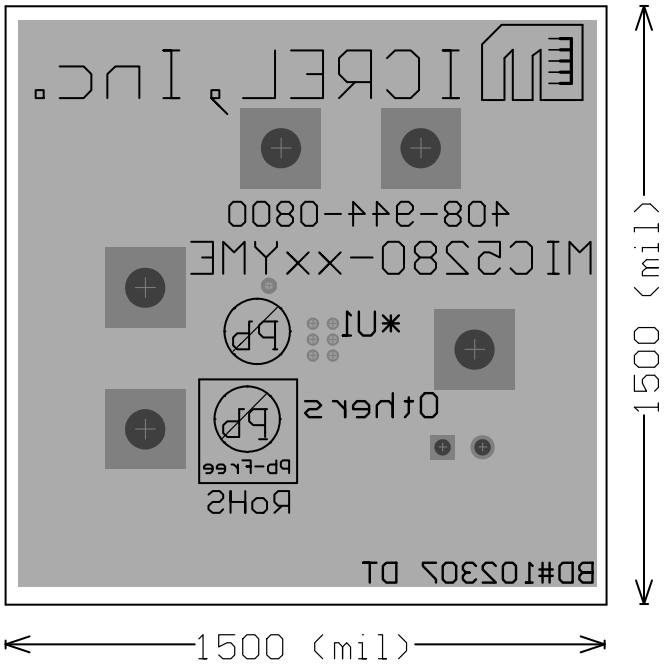

Bottom Layer

Package Information

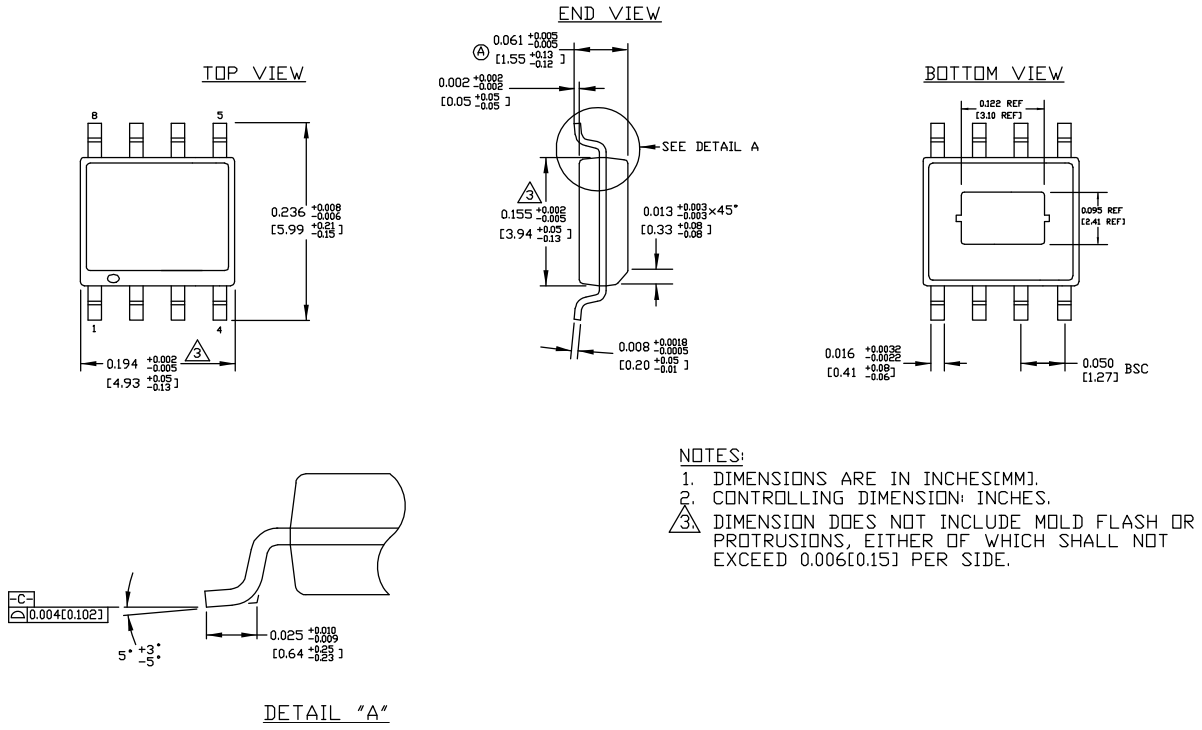

NOTES:
1. DIMENSIONS ARE IN INCHES[MM].
2. CONTROLLING DIMENSION: INCHES.
3. DIMENSION DOES NOT INCLUDE MOLD FLASH OR PROTRUSIONS, EITHER OF WHICH SHALL NOT EXCEED 0.006[0.15] PER SIDE.

8-Pin EPAD SOIC (ME)

MICREL, INC. 2180 FORTUNE DRIVE SAN JOSE, CA 95131 USA
TEL +1 (408) 944-0800 FAX +1 (408) 474-1000 WEB http://www.micrel.com

The information furnished by Micrel in this data sheet is believed to be accurate and reliable. However, no responsibility is assumed by Micrel for its use. Micrel reserves the right to change circuitry and specifications at any time without notification to the customer.

Micrel Products are not designed or authorized for use as components in life support appliances, devices or systems where malfunction of a product can reasonably be expected to result in personal injury. Life support devices or systems are devices or systems that (a) are intended for surgical implant into the body or (b) support or sustain life, and whose failure to perform can be reasonably expected to result in a significant injury to the user. A Purchaser's use or sale of Micrel Products for use in life support appliances, devices or systems is a Purchaser's own risk and Purchaser agrees to fully indemnify Micrel for any damages resulting from such use or sale.

© 2008 Micrel, Incorporated.

ENTEGRECİ

Bu belge www.entegreci.com üzerinden sunulmaktadır.

Elektronik komponent tedarikinde Entegreci

Entegreci, Eskişehir merkezli, Türkiye geneline satış yapan bir elektronik komponent mağazasıdır. Entegreler (IC), mikrodenetleyiciler, transistörler, diyotlar, pasif elemanlar, konnektörler, modüller ve geliştirme kartları tek adetten seri üretim adetlerine kadar satılır. Ürün sayfalarında güncel stok durumunu, fiyatı ve datasheet bağlantısını bulabilirsiniz.

Parça koduyla arama

Üretici parça numarasını yazın; stok ve fiyatı hemen görün.

www.entegreci.com

Ürün kategorileri

Entegreden kapasitöre tüm elektronik komponent kategorileri.

Kategorilere göz atın

Üreticiler

Aradığınız üreticinin ürünlerini tek sayfada inceleyin.

Üreticileri görün

Toplu alım ve teklif

Listede olmayan ya da yüksek adetli parçalar için teklif isteyin.

Teklif isteyin

www.entegreci.com | **destek@entegreci.com** | **0850 305 90 34**

Entegreci is an online electronic components store based in Türkiye. Search by manufacturer part number to see stock, prices and datasheets for integrated circuits, microcontrollers, transistors, passive components and connectors, or request a quote for parts that are not listed.

Bu sayfa Entegreci tarafından eklenmiştir. Belgenin önceki sayfaları asıl yayıncısına aittir ve içeriği değiştirilmemiştir; en güncel sürüm için belgenin yayıncısına başvurun.