MIC5355/6

Dual 500mA µCap Low Dropout, Micropower Linear Regulator

General Description

The MIC5355/6 is an advanced dual, micropower, low dropout linear regulator. The MIC5355/6 provides low quiescent current operation, using only 70µA with both outputs enabled making it ideal for battery-powered systems. In shutdown, the quiescent current drops to less than 1µA. The MIC5355/6 provides two independently-controlled high-performance 500mA LDOs with typical dropout voltage of 350mV at rated load. In addition, the MIC5355/6 is optimized to provide fast load and line transient performance with low-ESR ceramic output capacitors, requiring a minimum of only 2.2µF.

The MIC5356 also incorporates an active discharge feature when the part is disabled that switches in a 30Ω load to pull down the output of the regulator. The MIC5355/6 is available in fixed output voltages in a thermally-enhanced 8-pin ePad MSOP package or 8-pin ePad 3mm x 3mm MLF® package.

Data sheets and support documentation can be found on Micrel's web site at www.micrel.com.

Features

- 2.5V to 5.5V input voltage range
- 2% initial output accuracy
- Wide output voltage range: 1.0V to 3.3V
- Low quiescent current: 38µA per output
- Very low quiescent current in shutdown: <1µA typical
- µCap stable with 2.2µF ceramic capacitor
- Low dropout voltage: 350mV at 500mA
- Excellent load/line transient response
- Independent logic controlled enable pins
- Output discharge circuit: MIC5356
- Current and thermal limit protection
- Power 8-pin ePad MSOP package or 8-pin ePad 3mm x 3mm MLF® package

Applications

- Smart phones
- GPS, PMP, DSC
- Notebooks and desktops
- Digital TV
- Portable electronics

Typical Application

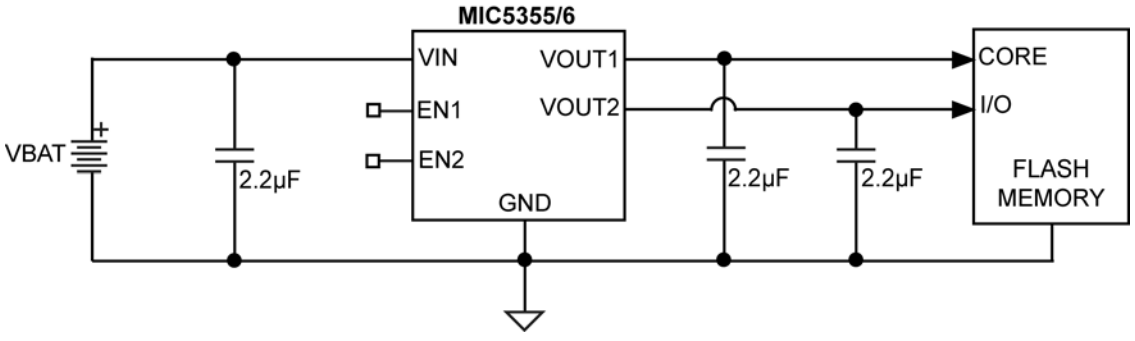

MLF and *Micro*LeadFrame are registered trademarks of Amkor Technology, Inc.

Ordering Information

Manufacturer Ordering Part Number	Part Number[1]	Marking Code	Voltage[2]	Junction Temperature Range	Package
MIC5355-SGYMME	MIC5355-3.3/1.8YMME	55SG	3.3V/1.8V	–40° to +125°C	8-Pin ePad MSOP
MIC5355-S4YMME	MIC5355-3.3/1.2YMME	55S4	3.3V/1.2V	–40° to +125°C	8-Pin ePad MSOP
MIC5355-SCYMME	MIC5355-3.3/1.0YMME	55SC	3.3V/1.0V	–40° to +125°C	8-Pin ePad MSOP
MIC5355-G4YMME	MIC5355-1.8/1.2YMME	55G4	1.8V/1.2V	–40° to +125°C	8-Pin ePad MSOP
MIC5355-JGYMME	MIC5355-2.5/1.8YMME	55JG	2.5V1.8V	–40° to +125°C	8-Pin ePad MSOP
MIC5356-SGYMME	MIC5356-3.3/1.8YMME	56SG	3.3V/1.8V	–40° to +125°C	8-Pin ePad MSOP
MIC5356-S4YMME	MIC5356-3.3/1.2YMME	56S4	3.3V/1.2V	–40° to +125°C	8-Pin ePad MSOP
MIC5356-SCYMME	MIC5356-3.3/1.0YMME	56SC	3.3V/1.0V	–40° to +125°C	8-Pin ePad MSOP
MIC5356-G4YMME	MIC5356-1.8/1.2YMME	56G4	1.8V/1.2V	–40° to +125°C	8-Pin ePad MSOP
MIC5356-JGYMME	MIC5356-2.5/1.8YMME	56JG	2.5V/1.8V	–40° to +125°C	8-Pin ePad MSOP
MIC5356-MMYML	MI5356-2.8/2.8YML	M3M	2.8V/2.8V	–40° to +125°C	8-Pin ePad 3mm x 3mm MLF®
MIC5356-MGYML	MI5356-2.8/1.8YML	M3G	2.8V/1.8V	–40° to +125°C	8-Pin ePad 3mm x 3mm MLF®

Notes:

1. MIC5356 offers Auto-Discharge function.
2. Other voltage available. Contact Micrel for detail.

Pin Configuration

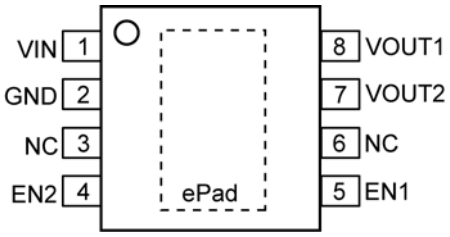

8-Pin ePad MSOP (MME)

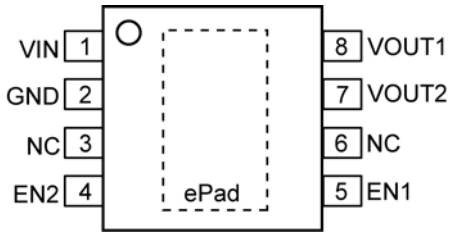

8-Pin ePad 3mm x 3mm MLF® (ML)

Pin Description

Pin Number	Pin Name	Pin Function
1	VIN	Supply Input.
2	GND	Ground.
3	NC	Not internally connected.
4	EN2	Enable Input LDO2. Active High Input. Logic High = On; Logic Low = Off; Do not leave floating.
5	EN1	Enable Input LDO1. Active High Input. Logic High = On; Logic Low = Off; Do not leave floating.
6	NC	Not internally connected.
7	VOUT2	LDO2 Output.
8	VOUT1	LDO1 Output.
ePad	HSPAD	Heatsink pad. Connect to ground.

Absolute Maximum Ratings[1]

Supply Voltage (V_{IN}) ..... –0.3V to +6V
Enable Voltage (V_{EN1}, V_{EN2}) ..... –0.3V to V_{IN} +0.3V
Power Dissipation (P_D) ..... Internally Limited[3]
Lead Temperature (soldering, 10sec.) ..... 260°C
Junction Temperature (T_J) ..... –40°C to +125°C
Storage Temperature (T_s) ..... –65°C to +150°C
ESD Rating[4] ..... ESD Sensitive

Operating Ratings[2]

Supply Voltage (V_{IN}) ..... +2.5V to 5.5V
Enable Voltage (V_{EN1}, V_{EN2}) ..... 0V to V_{IN}
Junction Temperature (T_J) ..... –40°C to +125°C
Junction Thermal Resistance
8-Pin ePad MSOP (θ_{JA}) ..... 64.4°C/W
8-Pin ePad 3mm x 3mm MLF® (θ_{JA}) ..... 61°C/W

Electrical Characteristics[5]

V_{IN} = V_{EN1} = V_{EN2} = V_{OUT} +1V; higher of the two outputs; $I_{OUTLDO1}$ = $I_{OUTLDO2}$ = 100µA; C_{OUT1} = C_{OUT2}= 2.2 µF; T_J = +25°C, **bold** values indicate –40°C to +125°C, unless noted.

Parameter	Condition	Min.	Typ.	Max.	Units
Output Voltage Accuracy	Variation from nominal V_{OUT}	–2.0		+2.0	%
	Variation from nominal V_{OUT}	**–3.0**		**+3.0**	
Line Regulation	V_{IN} = V_{OUT} + 1V to 5.5V, I_{OUT} = 100µA		0.02	**0.3**	%/V
Load Regulation	I_{OUT} = 100µA to 500mA		0.3	**1**	%
Dropout Voltage	I_{OUT} = 50mA		40	**100**	mV
	I_{OUT} = 500mA		350	**800**	
Ground Pin Current	V_{EN1} = High; V_{EN2} = Low; I_{OUT1} = 0mA		38	**53**	µA
	V_{EN1} = Low; V_{EN2} = High; I_{OUT2} = 0mA		38	**53**	
	V_{EN1} = V_{EN2} = High; I_{OUT1} = I_{OUT2} = 0mA		70	**100**	
	V_{EN1} = High; V_{EN2} = Low; I_{OUT1} = 500mA		55	**90**	
	V_{EN1} = Low; V_{EN2} = High; I_{OUT2} = 500mA		55	**90**	
	V_{EN1} = V_{EN2} = High; I_{OUT1} = I_{OUT2} = 500mA		105	**200**	
Shutdown Current	V_{EN1} = V_{EN2} ≤0.2V		0.05	1	µA
Ripple Rejection	f = 1kHz; C_{OUT} = 2.2µF; I_{OUT} = 250mA		60		dB
Current Limit	V_{OUT} = 0V	525	750	1050	mA
Output Voltage Noise	C_{OUT} = 2.2µF, 10Hz to 100kHz		146		μV_{RMS}
Auto-Discharge NFET Resistance	MIC5356 only; V_{EN1} = V_{EN2} = 0V; V_{IN} = 3.6V; I_{OUT} = –3mA		30		Ω

Notes:

1. Exceeding the absolute maximum rating may damage the device.
2. The device is not guaranteed to function outside its operating rating.
3. The maximum allowable power dissipation of any T_A (ambient temperature) is $P_{D(MAX)} = (T_{J(MAX)} - T_A) / \theta_{JA}$. Exceeding the maximum allowable power dissipation will result in excessive die temperature and the register will go into thermal shutdown.
4. Devices are ESD sensitive. Handling precautions recommended. Human body model, 1.5kΩ in series with 100pF.
5. Specification for packaged product only.

Electrical Characteristics[4]

$V_{IN} = V_{EN1} = V_{EN2} = V_{OUT}$ +1V; higher of the two outputs; $I_{OUTLDO1} = I_{OUTLDO2}$ = 100µA; $C_{OUT1} = C_{OUT2}$= 2.2 µF; T_J = +25°C, **bold** values indicate –40°C to +125°C, unless noted.

Parameter	Condition	Min.	Typ.	Max.	Units
Enable Inputs (EN1/EN2)					
Enable Input Voltage	Logic Low			**0.2**	V
	Logic High	**1.2**			
Enable Input Current	$V_{IL} \leq 0.2V$		0.01	1	µA
	$V_{IH} \geq 1.2V$		0.01	1	
Turn-On Time			50	125	µs

Notes:

1. Exceeding the absolute maximum rating may damage the device.
2. The device is not guaranteed to function outside its operating rating.
3. Devices are ESD sensitive. Handling precautions recommended. Human body model, 1.5kΩ in series with 100pF.
4. Specification for packaged product only.

Typical Characteristics

Power Supply Rejection Ratio

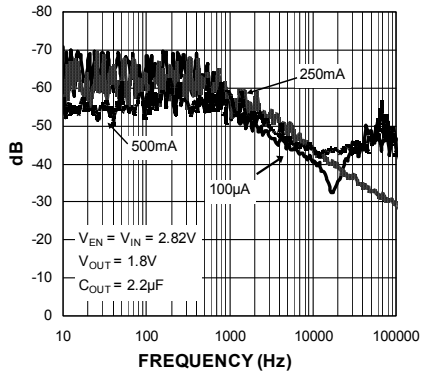

Output Voltage vs. Input Voltage

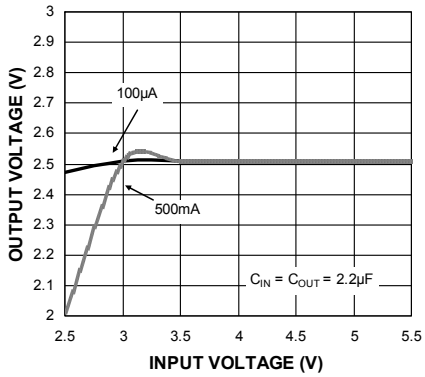

Output Voltage vs. Input Voltage

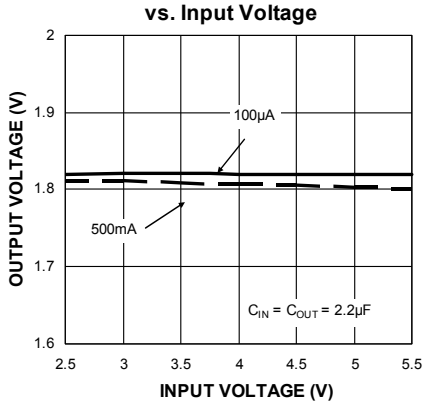

Output Voltage vs. Output Current (V_{OUT1})

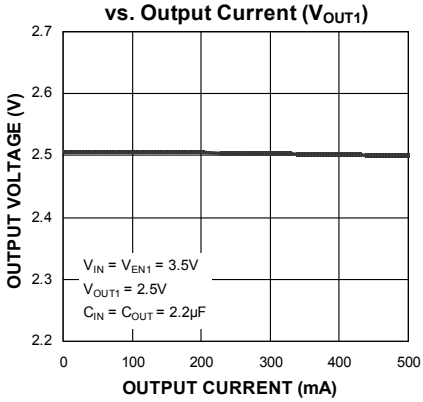

Output Voltage vs. Output Current (V_{OUT2})

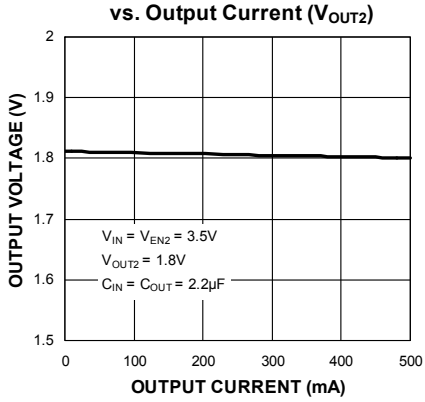

Ground Current vs. Input Voltage (Single Output)

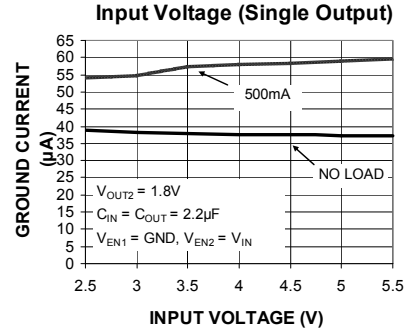

Ground Current vs. Input Voltage (Dual Output)

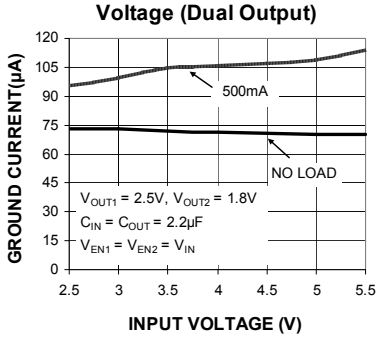

Ground Current vs. Output Current

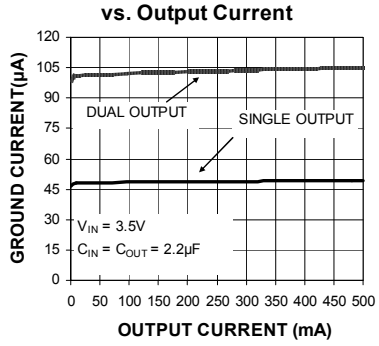

Ground Current vs. Temperature (Single Output)

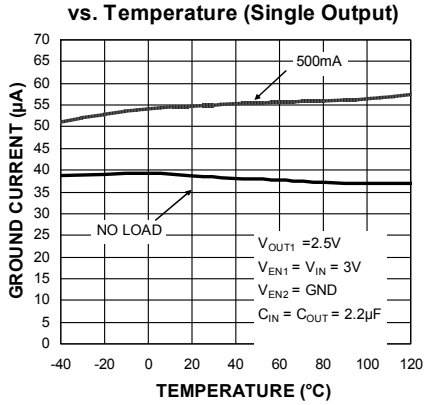

Typical Characteristics (Continued)

Ground Current vs. Temperature (Dual Output)

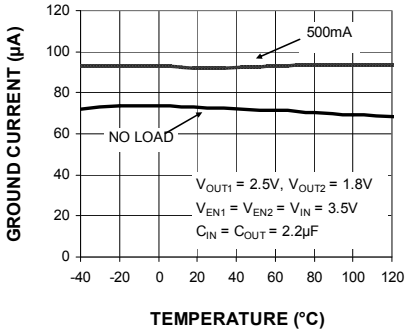

Dropout Voltage vs. Temperature

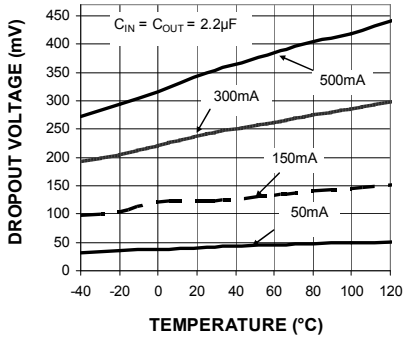

Dropout Voltage vs. Output Current

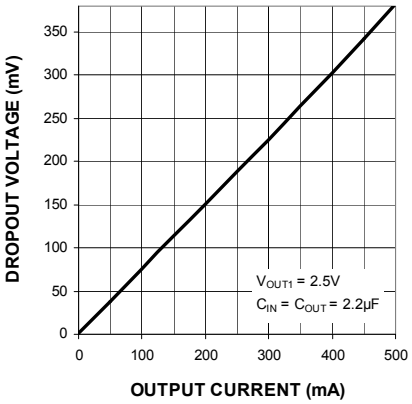

Current Limit vs. Input Voltage

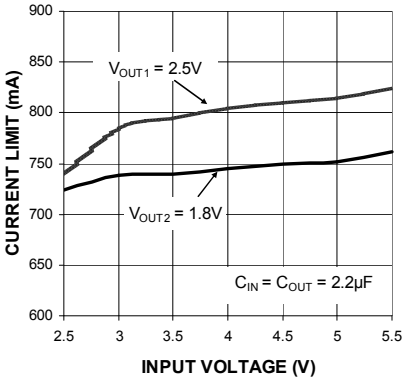

Output Noise Spectral Density

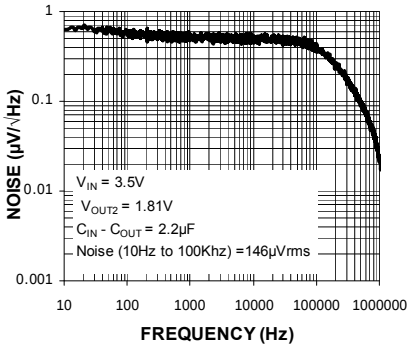

Functional Characteristics

Enable Turn-On

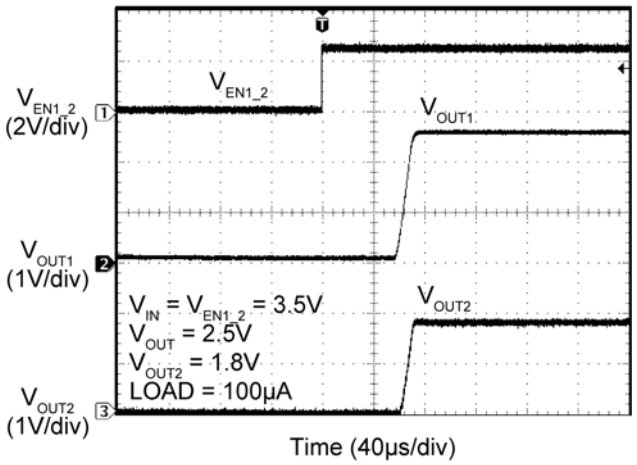

Enable Turn-On

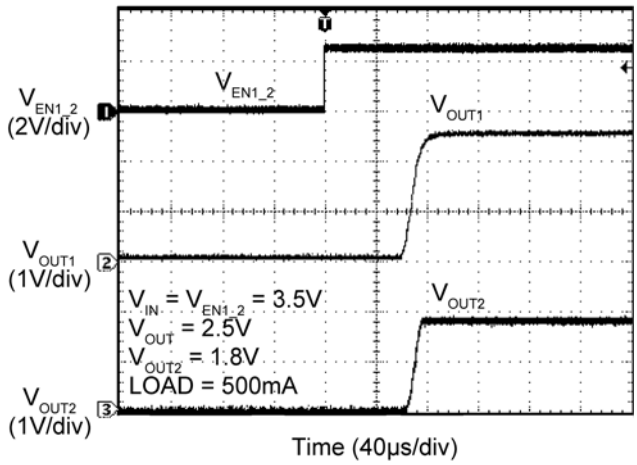

Load Transient

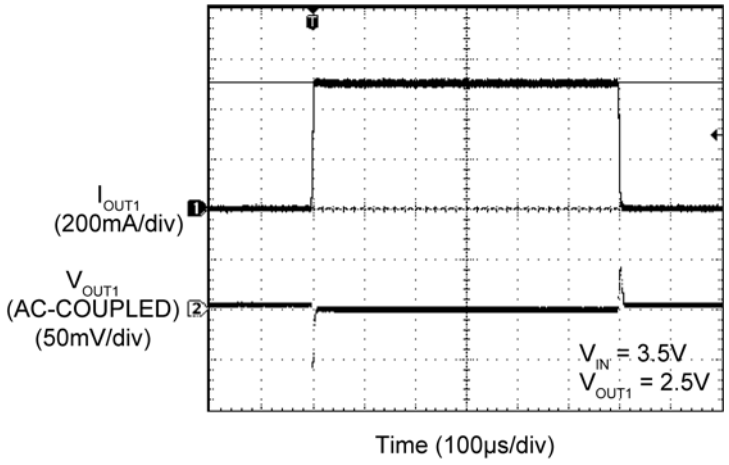

Load Transient

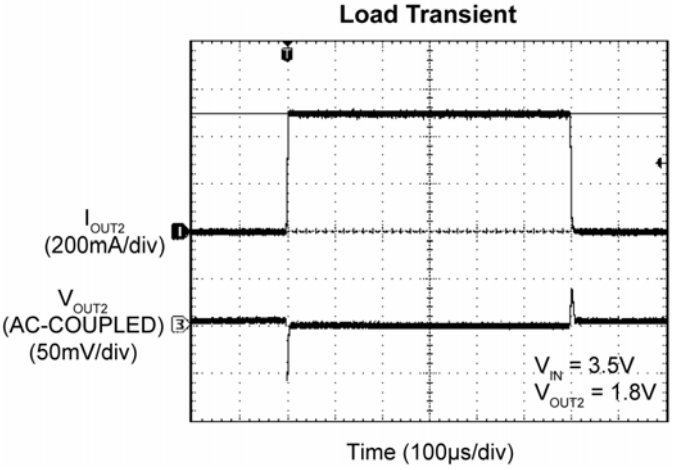

Line Transient

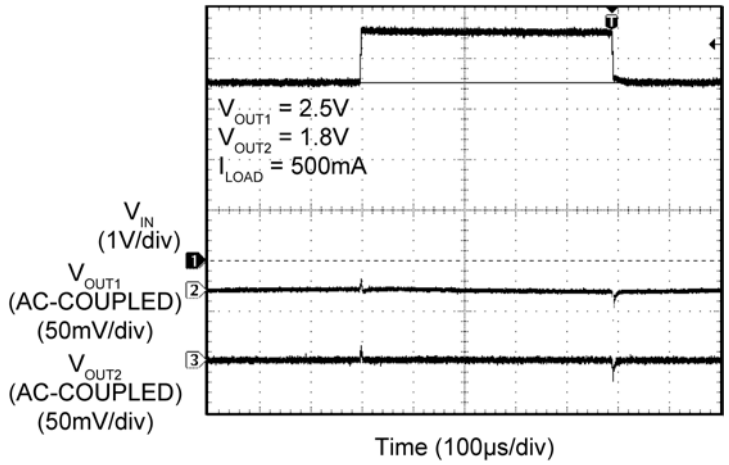

Auto Discharge (No Load)

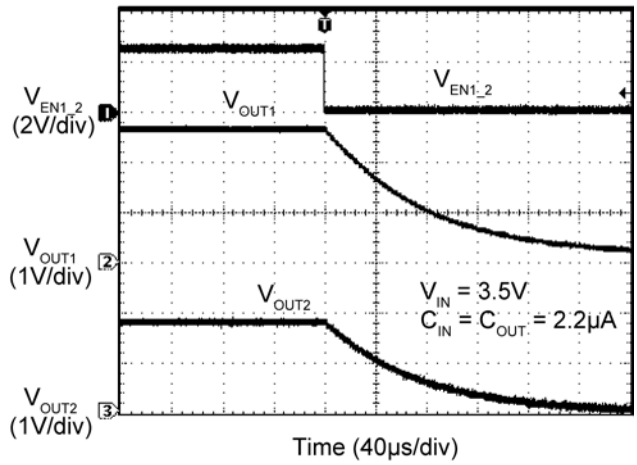

Functional Diagrams

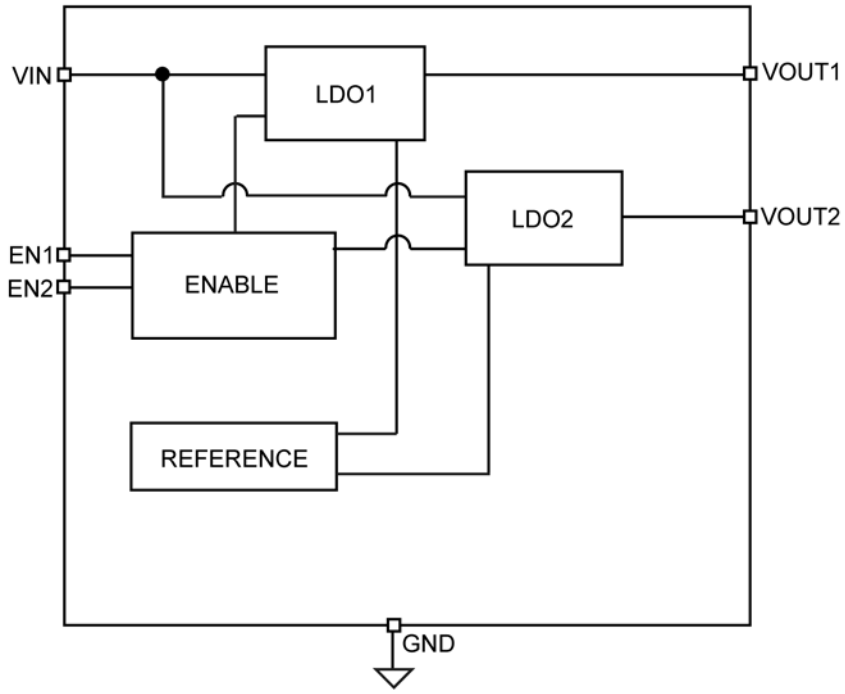

MIC5355 Block Diagram

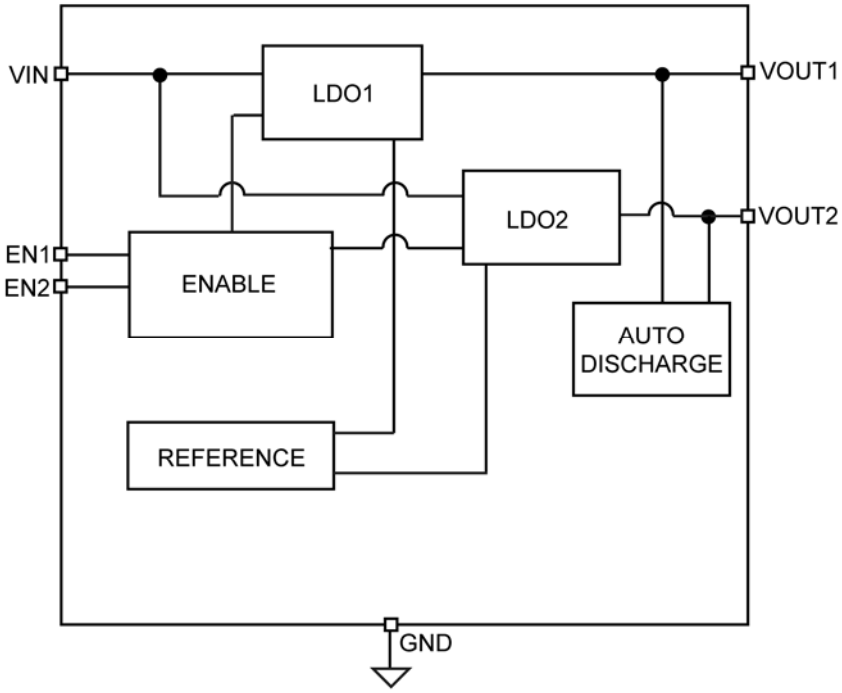

MIC5356 Block Diagram

Application Information

MIC5355/6 is a dual 500mA LDO. The MIC5356 includes an auto-discharge circuit for each LDO output that is activated when the output is disabled. The MIC5355/6 regulator is fully protected from damage due to fault conditions through linear current limiting and thermal shutdown.

Input Capacitor

The MIC5355/6 is a high-performance, high-bandwidth device. A 2.2µF input capacitor from the input pin to ground is required to provide stability. Low-ESR ceramic capacitors provide optimal performance in small board area. Additional high-frequency capacitors, such as small valued NPO dielectric type capacitors, help filter out high-frequency noise and are good practice in any RF based circuit. X5R or X7R dielectrics are recommended for the input capacitor. Y5V dielectrics lose most of their capacitance over temperature and are therefore not recommended.

Output Capacitor

The MIC5355/6 requires an output capacitor of 2.2µF or greater to maintain stability. The design is optimized for use with low-ESR ceramic chip capacitors. High-ESR capacitors may cause high-frequency oscillation. The output capacitor can be increased, but performance has been optimized for a 2.2µF ceramic output capacitor and does not improve significantly with larger capacitance.

X7R and X5R dielectric ceramic capacitors are recommended because of their temperature performance. X7R capacitors change capacitance by 15% over their operating temperature range and are the most stable type of ceramic capacitors. Z5U and Y5V dielectric capacitors change value by as much as 50% and 60% respectively over their operating temperature ranges. To use a ceramic chip capacitor with Y5V dielectric the value must be much higher than an X7R ceramic capacitor to ensure the same minimum capacitance over the equivalent operating temperature range.

No Load Stability

Unlike many other voltage regulators, the MIC5355/6 will remain stable and in regulation with no load.

Enable/Shutdown

The MIC5355/6 comes with two active high enable pins that allow each regulator to be disabled independently. Forcing the enable pin low disables the regulator and places it into an off mode current state drawing virtually zero current. When disabled, the MIC5356 switches an internal 30Ω load on the regulator output to discharge the external capacitor.

Forcing the enable pin high enables the output voltage. The active high enable pin uses CMOS technology and cannot be left floating. A floating enable pin may cause an indeterminate state on the output.

Thermal Considerations

The MIC5355/6 is designed to provide two 500mA continuous current outputs in a small package. Maximum operating temperature can be calculated based on the output currents and the voltage drop across the part. For example, if the input voltage is 3.0V, V_{OUT1} = 2.5V, V_{OUT2} = 1.8V and each with an output current = 500mA. The actual power dissipation of the regulator circuit can be determined using the equation:

$$P_D = (V_{IN} - V_{OUT1})\ I_{OUT} + (V_{IN} - V_{OUT2})\ I_{OUT2} + V_{IN}\ I_{GND}$$

Because this is CMOS device and the ground current is typically <100µA over the load range, the power dissipation contributed by the ground current is <1% which can be ignored for this calculation:

$$P_D = (3.0V - 2.5V) \times 500mA + (3.0V - 1.8V) \times 500mA$$
$$P_D = 0.85W$$

To determine the maximum ambient operating temperature of the package, use the junction to ambient thermal resistance of the device and the following basic equation:

$$P_{D(MAX)} = \left(\frac{T_{J(MAX)} - T_A}{\theta_{JA}} \right)$$

$T_{J(MAX)}$ = 125°C
θ_{JA} = 64.4°C/W

Substituting P_D for $P_{D(MAX)}$ and solving for the ambient operating temperature will give the maximum operating conditions for the regulator circuit. The junction to ambient thermal resistance for the minimum footprint is 64.4°C/W.

The maximum power dissipation must not be exceeded for proper operation.

For example, when operating a 2.5V/1.8V application with an input voltage of 3.0V and 500mA at each output with a minimum footprint layout, the maximum ambient operating temperature T_A can be determined as follows:

$$0.85W = (125°C – T_A)/(64.4°C/W)$$
$$T_A = 70.3°C$$

Therefore, a MIC5355-JGYMME application with 500mA at each output current can accept an ambient operating temperature of 70.3°C in a small 8-pin ePad MSOP package. For a full discussion of heat sinking and thermal effects on voltage regulators refer to the "Regulator Thermals" section of *Micrel's Designing with Low-Dropout Voltage Regulators* handbook. This information can be found on Micrel's website at:

http://www.micrel.com/_PDF/other/LDOBk_ds.pdf

Typical Application Schematic

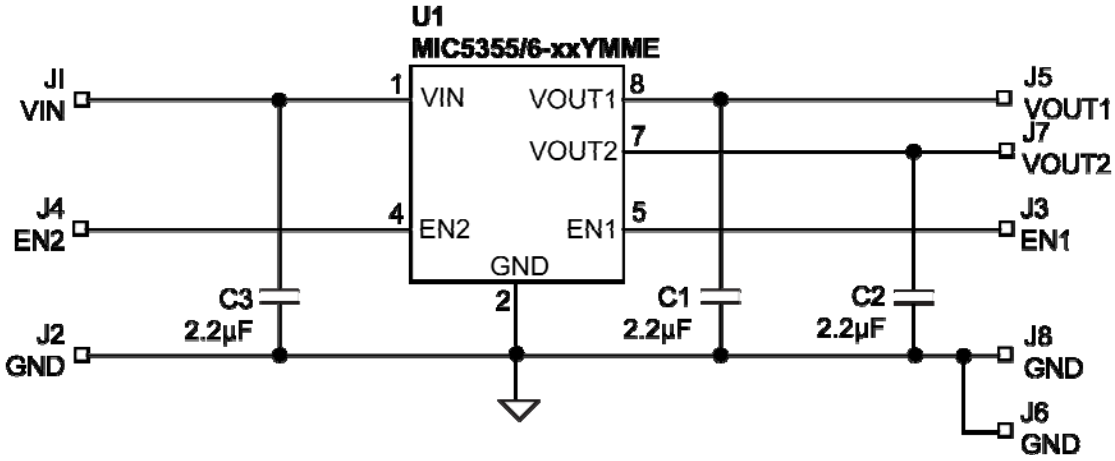

Bill of Materials

Item	Part Number	Manufacturer	Description	Qty.
C1, C2, C3	C1005X5R0J225M	TDK[1]	2.2µF ceramic capacitor, 6.3V, X5R, size 0402	3
U1	**MIC5355/6-xxYMME**	**Micrel, Inc.[2]**	**Dual 500mA µCap Low-Dropout, Micropower Linear Regulator**	**1**

Notes:

1. TDK: www.tdk.com.
2. **Micrel, Inc.: www.micrel.com.**

Typical Application Schematic (Continued)

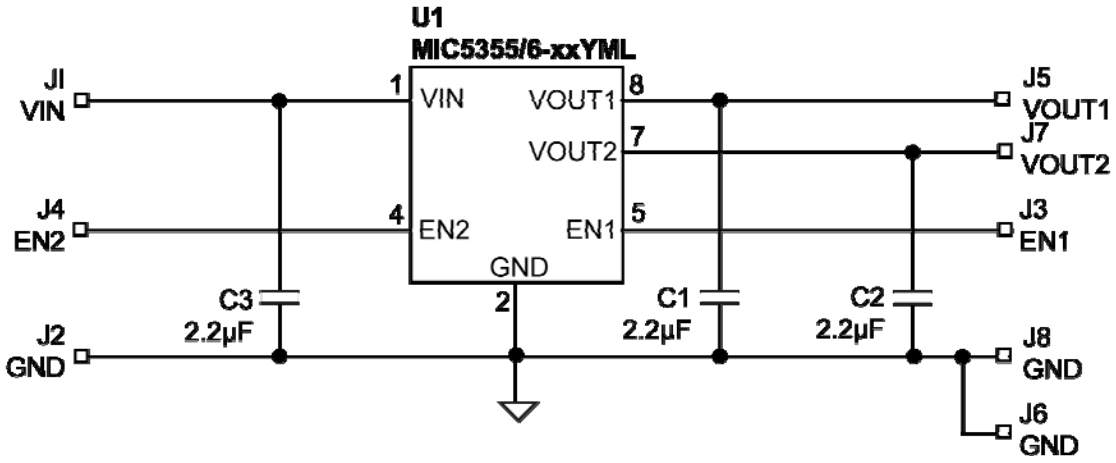

Bill of Materials

Item	Part Number	Manufacturer	Description	Qty.
C1, C2, C3	C1005X5R0J225M	TDK[1]	2.2µF ceramic capacitor, 6.3V, X5R, size 0402	3
U1	**MIC5355/6-xxYML**	**Micrel, Inc.[2]**	**Dual 500mA µCap Low-Dropout, Micropower Linear Regulator**	**1**

Notes:

3. TDK: www.tdk.com.
4. **Micrel, Inc.: www.micrel.com.**

PCB Layout Recommendations (MME Package)

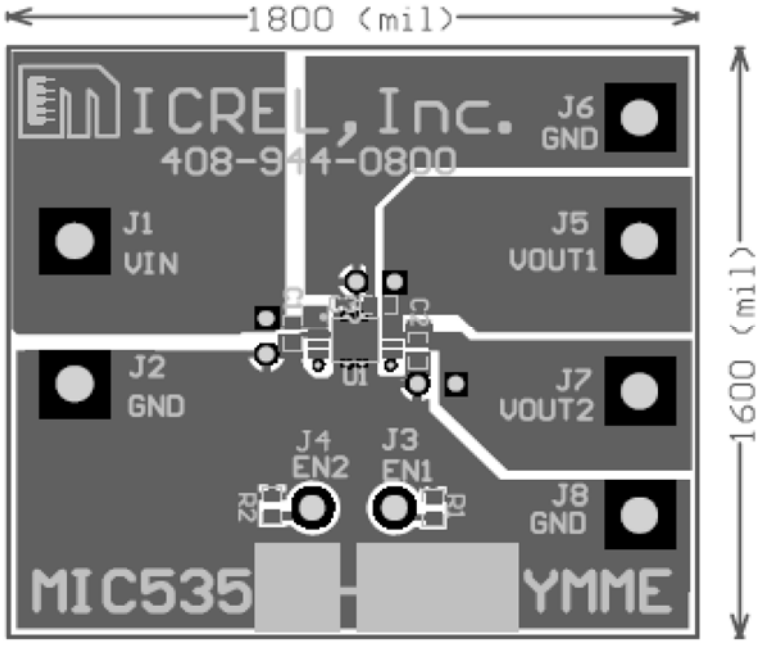

Top Layer

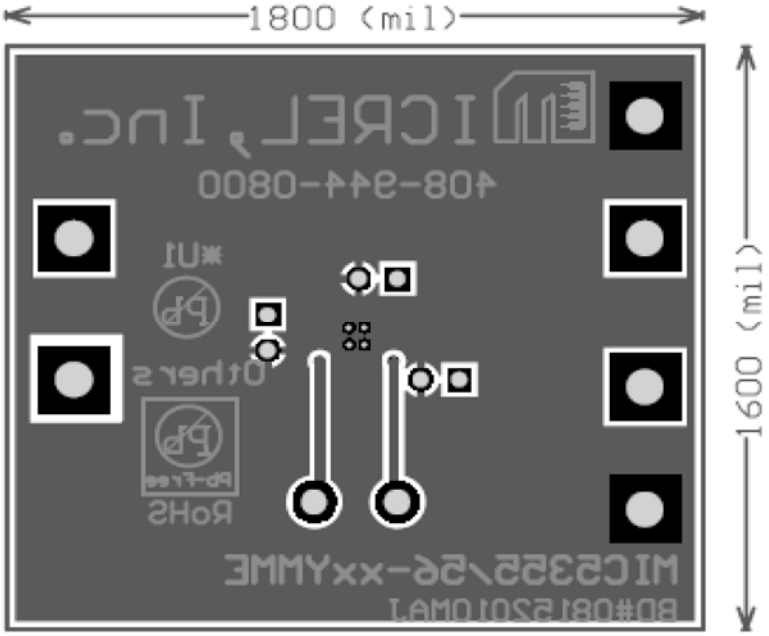

Bottom Layer

PCB Layout Recommendations (ML Package)

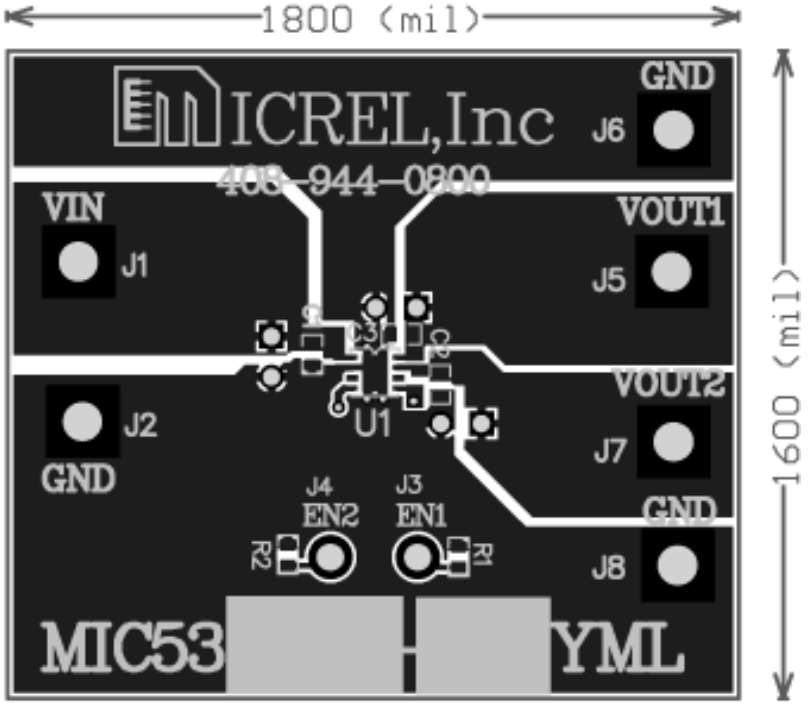

Top Layer

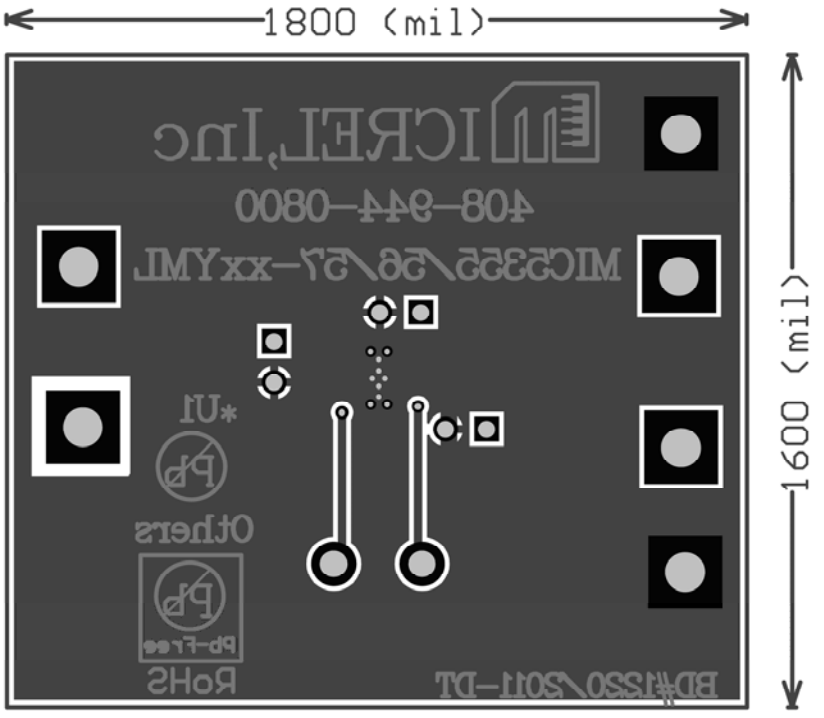

Bottom Layer

Package Information

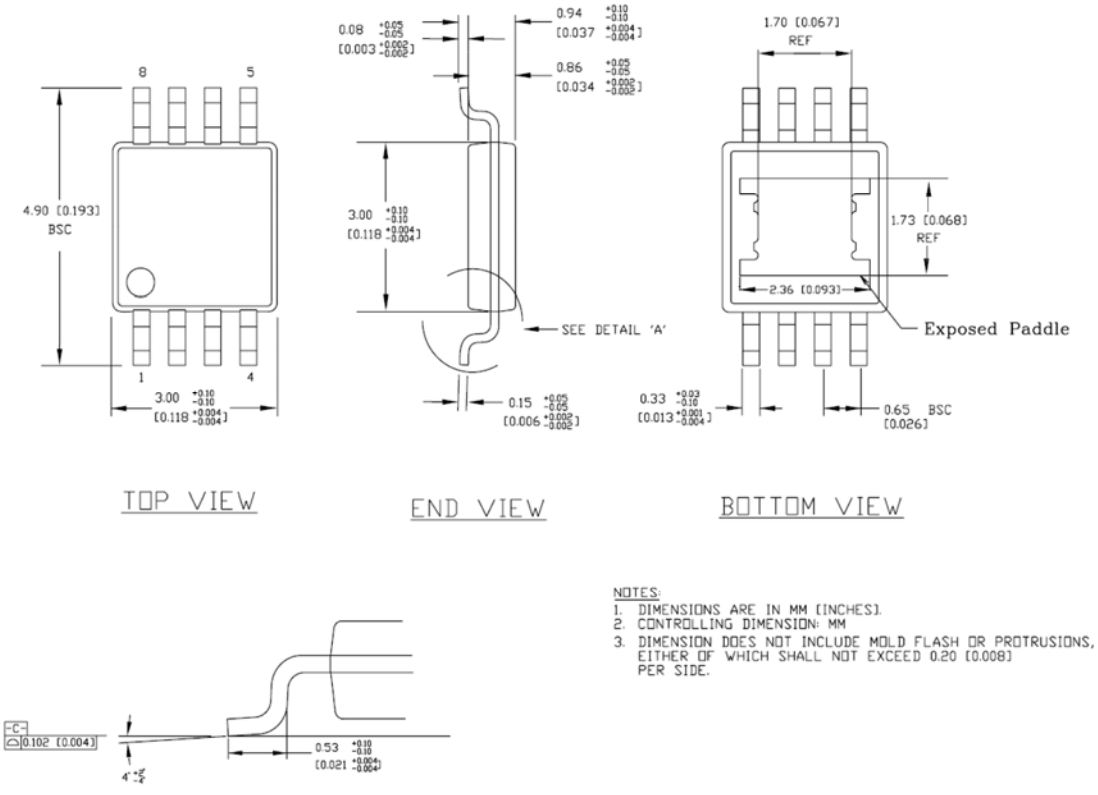

8-Pin ePad MSOP (MME)

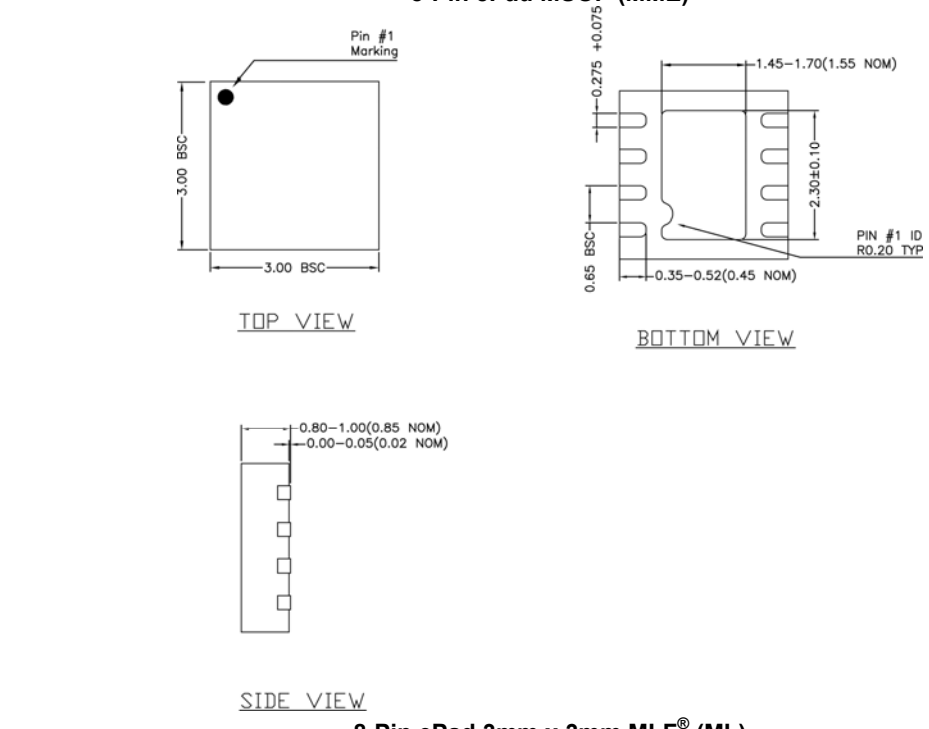

8-Pin ePad 3mm x 3mm MLF® (ML)

Package Information (Continued)

LP # MSOPEP-8LD-LP-1
All units are in mm
Tolerance ± 0.05 if not noted

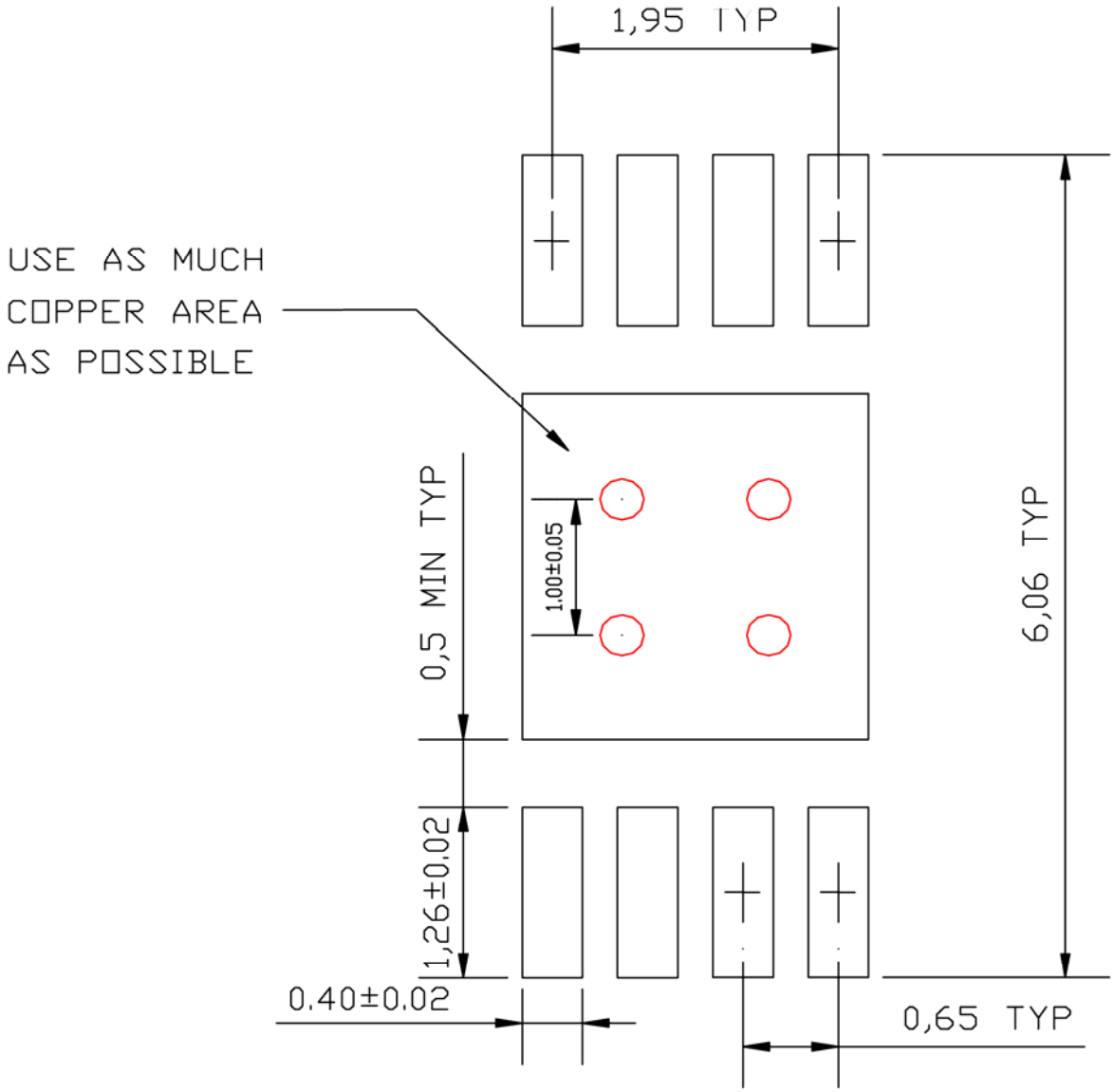

Red circle indicates Thermal Via. Size should be .300 −.350mm in diameter, 1/00mm pitch, and it should be connected to GND plane for maximum thermal performance.

8-Pin ePad MSOP (MME)

Package Information (Continued)

LP # MLF33D-8LD-LP-1
All units are in mm
Tolerance ± 0.05 if not noted

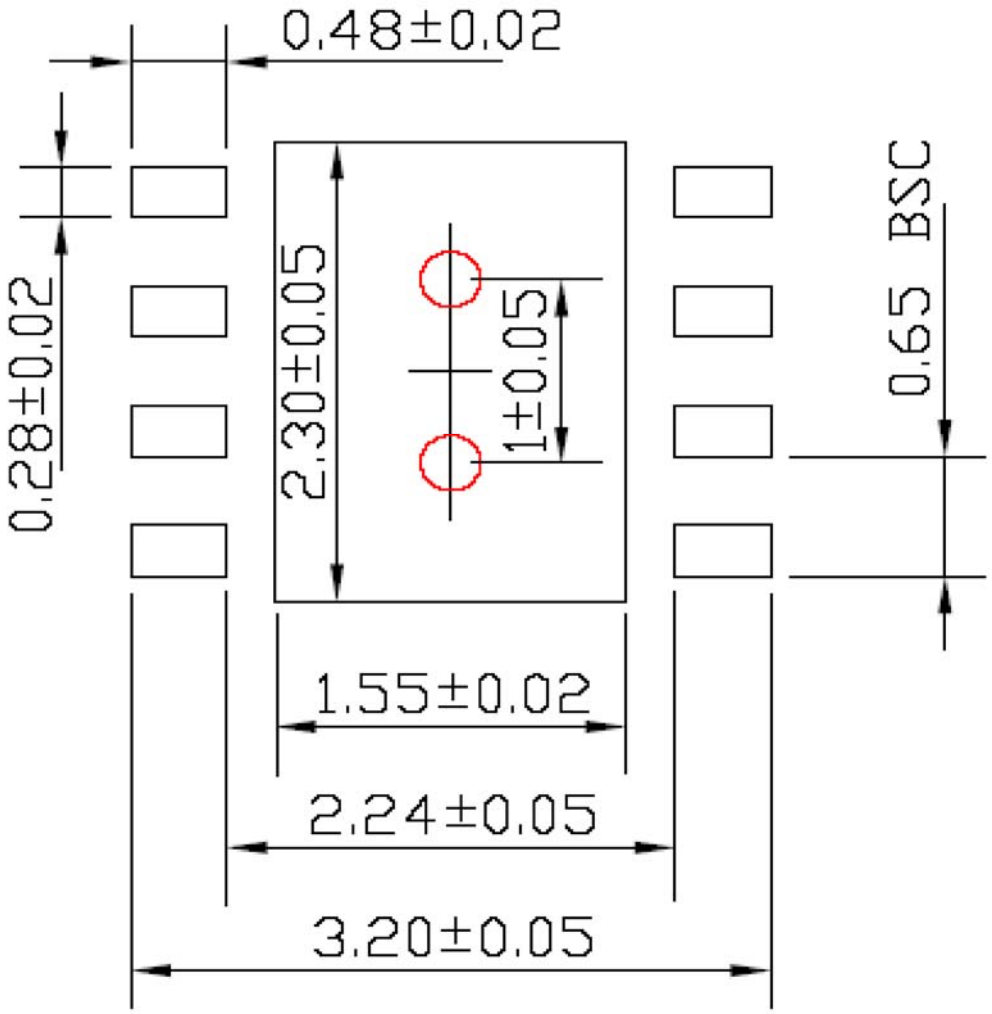

Red circle indicates Thermal Via. Size should be .300 −.350mm in diameter, 1/00mm pitch, and it should be connected to GND plane for maximum thermal performance.

8-Pin ePad 3mm x 3mm MLF® (ML)

MICREL, INC. 2180 FORTUNE DRIVE SAN JOSE, CA 95131 USA
TEL +1 (408) 944-0800 FAX +1 (408) 474-1000 WEB http://www.micrel.com

Micrel makes no representations or warranties with respect to the accuracy or completeness of the information furnished in this data sheet. This information is not intended as a warranty and Micrel does not assume responsibility for its use. Micrel reserves the right to change circuitry, specifications and descriptions at any time without notice. No license, whether express, implied, arising by estoppel or otherwise, to any intellectual property rights is granted by this document. Except as provided in Micrel's terms and conditions of sale for such products, Micrel assumes no liability whatsoever, and Micrel disclaims any express or implied warranty relating to the sale and/or use of Micrel products including liability or warranties relating to fitness for a particular purpose, merchantability, or infringement of any patent, copyright or other intellectual property right.

Micrel Products are not designed or authorized for use as components in life support appliances, devices or systems where malfunction of a product can reasonably be expected to result in personal injury. Life support devices or systems are devices or systems that (a) are intended for surgical implant into the body or (b) support or sustain life, and whose failure to perform can be reasonably expected to result in a significant injury to the user. A Purchaser's use or sale of Micrel Products for use in life support appliances, devices or systems is a Purchaser's own risk and Purchaser agrees to fully indemnify Micrel for any damages resulting from such use or sale.

© 2012 Micrel, Incorporated.

ENTEGRECİ

Bu belge www.entegreci.com üzerinden sunulmaktadır.

Elektronik komponent tedarikinde Entegreci

Entegreci, Eskişehir merkezli, Türkiye geneline satış yapan bir elektronik komponent mağazasıdır. Entegreler (IC), mikrodenetleyiciler, transistörler, diyotlar, pasif elemanlar, konnektörler, modüller ve geliştirme kartları tek adetten seri üretim adetlerine kadar satılır. Ürün sayfalarında güncel stok durumunu, fiyatı ve datasheet bağlantısını bulabilirsiniz.

Parça koduyla arama

Üretici parça numarasını yazın; stok ve fiyatı hemen görün.

www.entegreci.com

Ürün kategorileri

Entegreden kapasitöre tüm elektronik komponent kategorileri.

Kategorilere göz atın

Üreticiler

Aradığınız üreticinin ürünlerini tek sayfada inceleyin.

Üreticileri görün

Toplu alım ve teklif

Listede olmayan ya da yüksek adetli parçalar için teklif isteyin.

Teklif isteyin

www.entegreci.com | **destek@entegreci.com** | **0850 305 90 34**

Entegreci is an online electronic components store based in Türkiye. Search by manufacturer part number to see stock, prices and datasheets for integrated circuits, microcontrollers, transistors, passive components and connectors, or request a quote for parts that are not listed.

Bu sayfa Entegreci tarafından eklenmiştir. Belgenin önceki sayfaları asıl yayıncısına aittir ve içeriği değiştirilmemiştir; en güncel sürüm için belgenin yayıncısına başvurun.