# MIC5365/6

## High-Performance Single 150mA LDO

## General Description

The MIC5365/6 is an advanced general purpose linear regulator offering high power supply rejection (PSRR) in an ultra-small 1mm × 1mm package. The MIC5366 includes an auto-discharge feature that is activated when the enable pin is low. The MIC5365/6 is capable of sourcing 150mA output current and offers high PSRR making it an ideal solution for any portable electronic application.

Ideal for battery-powered applications, the MIC5365/6 offers 2% initial accuracy, low dropout voltage (155mV @ 150mA), and low ground current (typically 29µA). The MIC5365/6 can also be put into a zero-off-mode current state, drawing virtually no current when disabled.

The MIC5365/6 is available in several advanced packages including a lead-free (RoHS-compliant) 1mm × 1mm Thin MLF® occupying only $1mm^2$ of PCB area, a 75% reduction in board area compared to SC-70 and 2mm × 2mm MLF packages. It is also available in a thin SOT23-5 package.

The MIC5365/6 has an operating junction temperature range of –40°C to 125°C.

Data sheets and support documentation can be found on Micrel's web site at: www.micrel.com.

## Features

- Tiny 1mm × 1mm thin MLF, SC-70-5, and thin SOT23-5 packages
- Input voltage range: 2.5V to 5.5V
- 150mA guaranteed output current
- Stable with 1µF ceramic output capacitors
- Low dropout voltage – 155mV @ 150mA
- Excellent load/line transient response
- Low quiescent current – 29µA
- High PSRR – 70dB
- Output discharge circuit – MIC5366
- High output accuracy
  - ±2% initial accuracy
- Thermal-shutdown and current-limit protection

## Applications

- Mobile phones
- Digital cameras
- GPS, PDAs, PMP, handhelds
- Portable electronics

## Typical Application

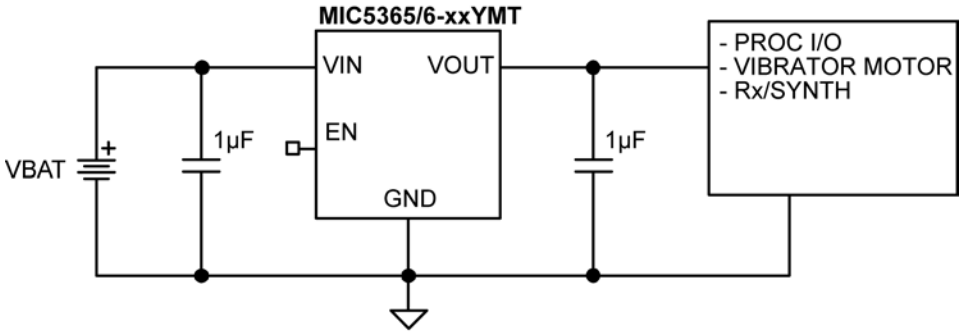


MLF and *Micro*LeadFrame are registered trademarks of Amkor Technology, Inc.

## Block Diagrams

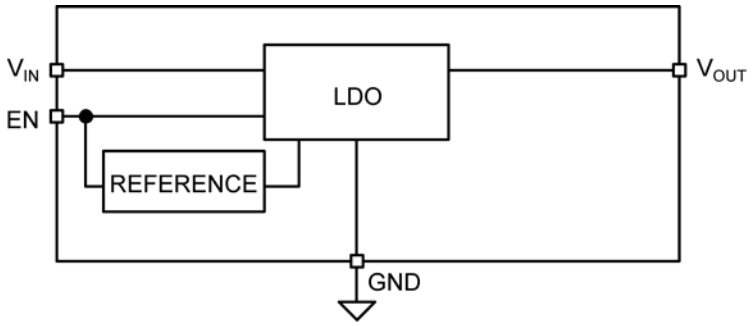


**MIC5365 Block Diagram**

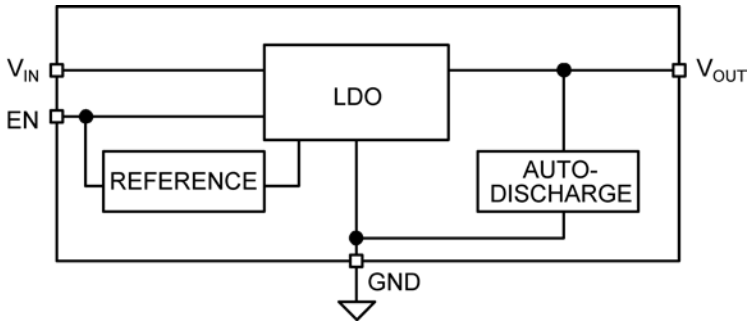


**MIC5366 Block Diagram**

## Ordering Information

| Part Number | Marking Code | Output Voltage | Temperature Range | Package | Lead Finish |
|---|---|---|---|---|---|
| MIC5365-1.0YMT | 5C | 1.0V | –40°C to +125°C | 4-Pin 1mm × 1mm Thin MLF | Pb-Free |
| MIC5365-1.2YMT | 54 | 1.2V | –40°C to +125°C | 4-Pin 1mm × 1mm Thin MLF | Pb-Free |
| MIC5365-1.3YMT | 55 | 1.3V | –40°C to +125°C | 4-Pin 1mm × 1mm Thin MLF | Pb-Free |
| MIC5365-1.5YMT | 5F | 1.5V | –40°C to +125°C | 4-Pin 1mm × 1mm Thin MLF | Pb-Free |
| MIC5365-1.8YMT | 5G | 1.8V | –40°C to +125°C | 4-Pin 1mm × 1mm Thin MLF | Pb-Free |
| MIC5365-2.0YMT | 5H | 2.0V | –40°C to +125°C | 4-Pin 1mm × 1mm Thin MLF | Pb-Free |
| MIC5365-2.5YMT | 5J | 2.5V | –40°C to +125°C | 4-Pin 1mm × 1mm Thin MLF | Pb-Free |
| MIC5365-2.6YMT | 5K | 2.6V | –40°C to +125°C | 4-Pin 1mm × 1mm Thin MLF | Pb-Free |
| MIC5365-2.7YMT | 5L | 2.7V | –40°C to +125°C | 4-Pin 1mm × 1mm Thin MLF | Pb-Free |
| MIC5365-2.8YMT | 5M | 2.8V | –40°C to +125°C | 4-Pin 1mm × 1mm Thin MLF | Pb-Free |
| MIC5365-2.85YMT | 5N | 2.85V | –40°C to +125°C | 4-Pin 1mm × 1mm Thin MLF | Pb-Free |
| MIC5365-2.9YMT | 5O | 2.9V | –40°C to +125°C | 4-Pin 1mm × 1mm Thin MLF | Pb-Free |
| MIC5365-3.0YMT | 5P | 3.0V | –40°C to +125°C | 4-Pin 1mm × 1mm Thin MLF | Pb-Free |
| MIC5365-3.1YMT | 5Q | 3.1V | –40°C to +125°C | 4-Pin 1mm × 1mm Thin MLF | Pb-Free |
| MIC5365-3.3YMT | 5S | 3.3V | –40°C to +125°C | 4-Pin 1mm × 1mm Thin MLF | Pb-Free |
| MIC5365-1.0YC5 | 65C | 1.0V | –40°C to +125°C | SC-70-5 | Pb-Free |
| MIC5365-1.2YC5 | 654 | 1.2V | –40°C to +125°C | SC-70-5 | Pb-Free |
| MIC5365-1.3YC5 | 655 | 1.3V | –40°C to +125°C | SC-70-5 | Pb-Free |
| MIC5365-1.5YC5 | 65F | 1.5V | –40°C to +125°C | SC-70-5 | Pb-Free |
| MIC5365-1.8YC5 | 65G | 1.8V | –40°C to +125°C | SC-70-5 | Pb-Free |
| MIC5365-2.0YC5 | 65H | 2.0V | –40°C to +125°C | SC-70-5 | Pb-Free |
| MIC5365-2.5YC5 | 65J | 2.5V | –40°C to +125°C | SC-70-5 | Pb-Free |
| MIC5365-2.6YC5 | 65K | 2.6V | –40°C to +125°C | SC-70-5 | Pb-Free |
| MIC5365-2.7YC5 | 65L | 2.7V | –40°C to +125°C | SC-70-5 | Pb-Free |
| MIC5365-2.8YC5 | 65M | 2.8V | –40°C to +125°C | SC-70-5 | Pb-Free |
| MIC5365-2.85YC5 | 65N | 2.85V | –40°C to +125°C | SC-70-5 | Pb-Free |
| MIC5365-2.9YC5 | 65O | 2.9V | –40°C to +125°C | SC-70-5 | Pb-Free |
| MIC5365-3.0YC5 | 65P | 3.0V | –40°C to +125°C | SC-70-5 | Pb-Free |
| MIC5365-3.3YC5 | 65S | 3.3V | –40°C to +125°C | SC-70-5 | Pb-Free |
| MIC5365-1.2YD5 | 645 | 1.2V | –40°C to +125°C | 5-Pin TSOT23 | Pb-Free |
| MIC5365-1.8YD5 | 6G5 | 1.8V | –40°C to +125°C | 5-Pin TSOT23 | Pb-Free |
| MIC5365-2.8YD5 | 6M5 | 2.8V | –40°C to +125°C | 5-Pin TSOT23 | Pb-Free |
| MIC5365-2.85YD5 | 6N5 | 2.85V | –40°C to +125°C | 5-Pin TSOT23 | Pb-Free |
| MIC5365-3.3YD5 | 6S5 | 3.3V | –40°C to +125°C | 5-Pin TSOT23 | Pb-Free |
| MIC5366-1.0YMT* | 6C | 1.0V | –40°C to +125°C | 4-Pin 1mm × 1mm Thin MLF | Pb-Free |
| MIC5366-1.2YMT* | 64 | 1.2V | –40°C to +125°C | 4-Pin 1mm × 1mm Thin MLF | Pb-Free |
| MIC5366-1.3YMT* | 65 | 1.3V | –40°C to +125°C | 4-Pin 1mm × 1mm Thin MLF | Pb-Free |
| MIC5366-1.5YMT* | 6F | 1.5V | –40°C to +125°C | 4-Pin 1mm × 1mm Thin MLF | Pb-Free |
| MIC5366-1.8YMT* | 6G | 1.8V | –40°C to +125°C | 4-Pin 1mm × 1mm Thin MLF | Pb-Free |
| MIC5366-2.0YMT* | 6H | 2.0V | –40°C to +125°C | 4-Pin 1mm × 1mm Thin MLF | Pb-Free |
| MIC5366-2.5YMT* | 6J | 2.5V | –40°C to +125°C | 4-Pin 1mm × 1mm Thin MLF | Pb-Free |
| MIC5366-2.6YMT* | 6K | 2.6V | –40°C to +125°C | 4-Pin 1mm × 1mm Thin MLF | Pb-Free |
| MIC5366-2.7YMT* | 6L | 2.7V | –40°C to +125°C | 4-Pin 1mm × 1mm Thin MLF | Pb-Free |

## Ordering Information (Continued)

| Part Number | Marking Code | Output Voltage | Temperature Range | Package | Lead Finish |
|---|---|---|---|---|---|
| MIC5366-2.8YMT* | 6M | 2.8V | –40°C to +125°C | 4-Pin 1mm × 1mm Thin MLF | Pb-Free |
| MIC5366-2.85YMT* | 6N | 2.85V | –40°C to +125°C | 4-Pin 1mm × 1mm Thin MLF | Pb-Free |
| MIC5366-2.9YMT* | 6O | 2.9V | –40°C to +125°C | 4-Pin 1mm × 1mm Thin MLF | Pb-Free |
| MIC5366-3.0YMT* | 6P | 3.0V | –40°C to +125°C | 4-Pin 1mm × 1mm Thin MLF | Pb-Free |
| MIC5366-3.1YMT* | 6Q | 3.1V | –40°C to +125°C | 4-Pin 1mm × 1mm Thin MLF | Pb-Free |
| MIC5366-3.3YMT* | 6S | 3.3V | –40°C to +125°C | 4-Pin 1mm × 1mm Thin MLF | Pb-Free |
| MIC5366-1.0YC5* | 66C | 1.0V | –40°C to +125°C | SC-70-5 | Pb-Free |
| MIC5366-1.2YC5* | 664 | 1.2V | –40°C to +125°C | SC-70-5 | Pb-Free |
| MIC5366-1.3YC5* | 665 | 1.3V | –40°C to +125°C | SC-70-5 | Pb-Free |
| MIC5366-1.5YC5* | 66F | 1.5V | –40°C to +125°C | SC-70-5 | Pb-Free |
| MIC5366-1.8YC5* | 66G | 1.8V | –40°C to +125°C | SC-70-5 | Pb-Free |
| MIC5366-2.0YC5* | 66H | 2.0V | –40°C to +125°C | SC-70-5 | Pb-Free |
| MIC5366-2.5YC5* | 66J | 2.5V | –40°C to +125°C | SC-70-5 | Pb-Free |
| MIC5366-2.6YC5* | 66K | 2.6V | –40°C to +125°C | SC-70-5 | Pb-Free |
| MIC5366-2.7YC5* | 66L | 2.7V | –40°C to +125°C | SC-70-5 | Pb-Free |
| MIC5366-2.8YC5* | 66M | 2.8V | –40°C to +125°C | SC-70-5 | Pb-Free |
| MIC5366-2.85YC5* | 66N | 2.85V | –40°C to +125°C | SC-70-5 | Pb-Free |
| MIC5366-2.9YC5* | 66O | 2.9V | –40°C to +125°C | SC-70-5 | Pb-Free |
| MIC5366-3.0YC5* | 66P | 3.0V | –40°C to +125°C | SC-70-5 | Pb-Free |
| MIC5366-3.3YC5* | 66S | 3.3V | –40°C to +125°C | SC-70-5 | Pb-Free |

**Notes:**

1. Other voltages available. Contact Micrel for details.
2. Under bar symbol ( _ ) may not be to scale.
3. Thin MLF ▲ = Pin 1 identifier.
4. Thin MLF is a GREEN RoHS compliant package. Lead finish is NiPdAu. Mold compound is Halogen Free.

* MIC5366 offers Auto-Discharge function.

## Pin Configuration

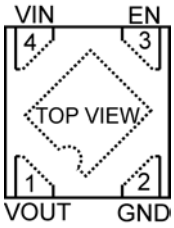


**4-Pin 1mm × 1mm Thin MLF (MT)**
**Fixed Version**

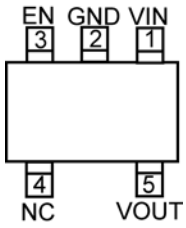


**5-Pin Thin SOT23 (D5)**
**Fixed Version**

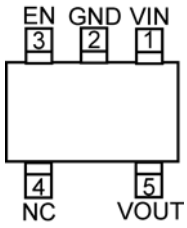


**5-Pin SC-70 (C5)**
**Fixed Version**

## Pin Description

| Pin Number | Pin Name Thin MLF-4 | Pin Name TSOT23-5 | Pin Name SC-70-5 | Pin Function |
|---|---|---|---|---|
| 1 | VOUT | – | – | Output Voltage. |
| 1 | – | VIN | VIN | Supply Input. |
| 2 | GND | GND | GND | Ground |
| 3 | EN | EN | EN | Enable Input: Active High. High = ON; Low = OFF. Do not leave floating. |
| 4 | VIN | – | – | Supply Input. |
| 4 | – | NC | NC | No connect. Not internally connected. |
| 5 | – | VOUT | VOUT | Output Voltage. |
| EP | HS Pad | NA | NA | Exposed Heatsink Pad. |

## Absolute Maximum Ratings[1]

Supply Voltage ($V_{IN}$) ..... 0V to 6V
Enable Voltage ($V_{EN}$) ..... 0V to $V_{IN}$
Power Dissipation ($P_D$) ..... Internally Limited[3]
Lead Temperature (soldering, 3µsec) ..... 260°C
Junction Temperature ($T_J$) ..... –40°C to +150°C
Storage Temperature ($T_s$) ..... –65°C to +150°C
ESD Rating[4] ..... 2kV

## Operating Ratings[2]

Supply Voltage ($V_{IN}$) ..... 2.5V to 5.5V
Enable Voltage ($V_{EN}$) ..... 0V to $V_{IN}$
Junction Temperature ($T_J$) ..... –40°C to +125°C
Junction Thermal Resistance
1mm × 1mm Thin MLF-4 ($\theta_{JA}$) ..... 240°C/W
SC-70-5 ($\theta_{JA}$) ..... 256.5°C/W
Thin SOT23-5 ($\theta_{JA}$) ..... 253°C/W

## Electrical Characteristics[5]

$V_{IN} = V_{EN} = V_{OUT} + 1V$; $C_{IN} = C_{OUT} = 1\mu F$; $I_{OUT} = 100\mu A$; $T_J = 25°C$, **bold** values indicate –40°C to +125°C, unless noted.

| Parameter | Condition | Min. | Typ. | Max. | Units |
|---|---|---|---|---|---|
| Output Voltage Accuracy | Variation from nominal $V_{OUT}$ | –2.0 | | +2.0 | % |
| | Variation from nominal $V_{OUT}$; –40°C to +125°C | **–3.0** | | **+3.0** | % |
| Line Regulation | $V_{IN} = V_{OUT}$ +1V to 5.5V; $I_{OUT} = 100\mu A$ | | 0.02 | **0.3** | % |
| Load Regulation[6] | $I_{OUT} = 100\mu A$ to 150mA | | 0.3 | 1 | % |
| Dropout Voltage[7] | $I_{OUT}$ = 50mA; $V_{OUT} \geq 2.8V$ | | 55 | **110** | mV |
| | $I_{OUT}$ = 150mA; $V_{OUT} \geq 2.8V$ | | 155 | **310** | mV |
| | $I_{OUT}$ = 50mA; $V_{OUT} < 2.8V$ | | 60 | **135** | mV |
| | $I_{OUT}$ = 150mA; $V_{OUT} < 2.8V$ | | 180 | **380** | mV |
| Ground Pin Current[8] | $I_{OUT}$ = 0mA | | 29 | **39** | µA |
| Ground Pin Current in Shutdown | $V_{EN} \leq 0.2V$ | | 0.05 | 1 | µA |
| Ripple Rejection | f = up to 1kHz; $C_{OUT} = 1\mu F$ | | 80 | | dB |
| | f = 1kHz – 10kHz; $C_{OUT} = 1\mu F$ | | 65 | | dB |
| Current Limit | $V_{OUT}$ = 0V | 200 | 325 | 550 | mA |
| Output Voltage Noise | $C_{OUT} = 1\mu F$, 10Hz to 100kHz | | 200 | | $\mu V_{RMS}$ |
| Auto-Discharge NFET Resistance | MIC5366 Only; $V_{EN}$ = 0V; $V_{IN}$ = 3.6V; $I_{OUT}$ = –3mA | | 30 | | Ω |
| **Enable Input** | | | | | |
| Enable Input Voltage | Logic Low | | | **0.2** | V |
| | Logic High | **1.2** | | | V |
| Enable Input Current | $V_{IL} \leq 0.2V$ | | 0.01 | **1** | µA |
| | $V_{IH} \geq 1.2V$ | | 0.01 | **1** | µA |
| Turn-on Time | $C_{OUT} = 1\mu F$; $I_{OUT}$ = 150mA | | 50 | **125** | µs |

**Notes:**

1. Exceeding the absolute maximum rating may damage the device.
2. The device is not guaranteed to function outside its operating rating.
3. The maximum allowable power dissipation of any $T_A$ (ambient temperature) is $P_{D(max)} = T_{J(max)} – T_A) / \theta_{JA}$. Exceeding the maximum allowable power dissipation will result in excessive die temperature, and the regulator will go into thermal shutdown.
4. Devices are ESD sensitive. Handling precautions recommended. Human body model, 1.5kΩ in series with 100pF.
5. Specification for packaged product only.
6. Regulation is measured at constant junction temperature using low duty cycle pulse testing, changes in output voltage due to heating effects are covered by the thermal regulation specification.
7. Dropout voltage is defined as the input-to-output differential at which the output voltage drops 2% below its nominal value measured at 1V differential. For outputs below 2.5V, dropout voltage is the input-to-output differential with the minimum input voltage 2.5V.
8. Ground pin current is the regulator quiescent current. The total current drawn from the supply is the sum of the load current plus the ground pin current.

## Typical Characteristics

**Power Supply Rejection Ratio**

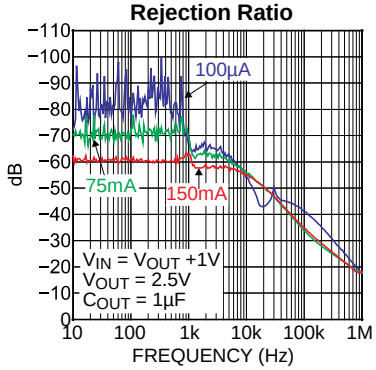


**Dropout Voltage vs. Load Current**

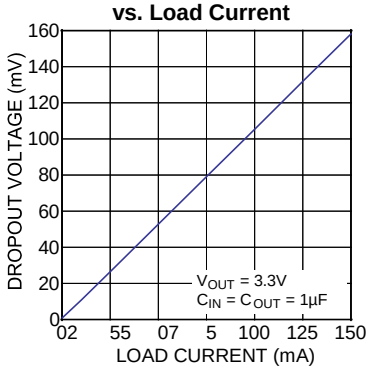


**Dropout Voltage vs. Temperature**

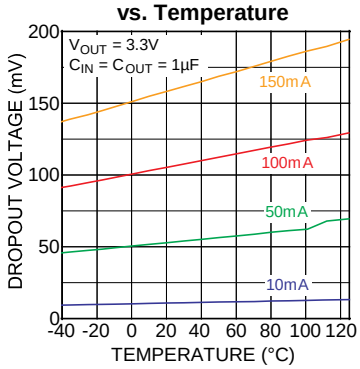


**Ground Current vs. Supply Voltage**

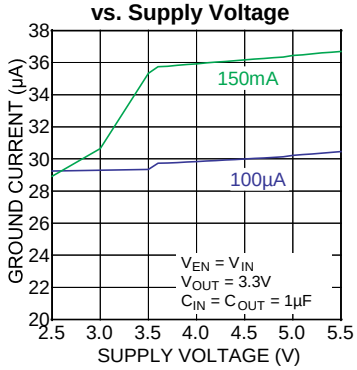


**Ground Current vs. Load Current**

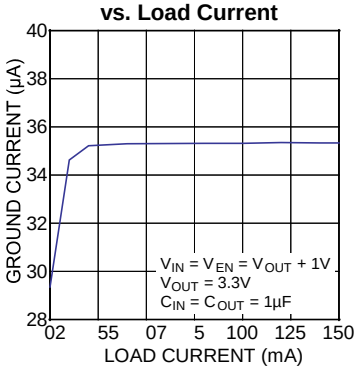


**Ground Current vs. Temperature**

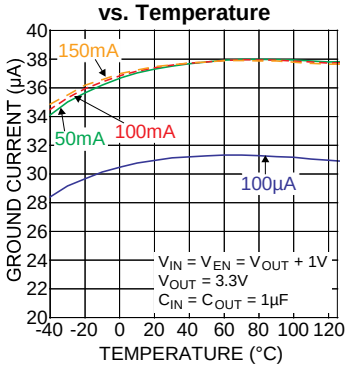


**Output Voltage vs. Load Current**

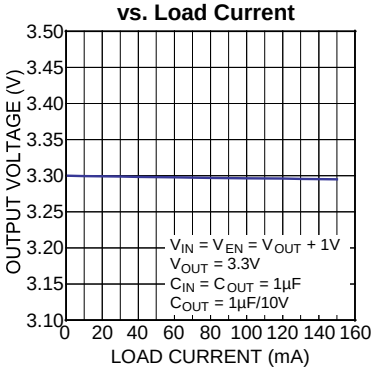


**Output Voltage vs. Supply Voltage**

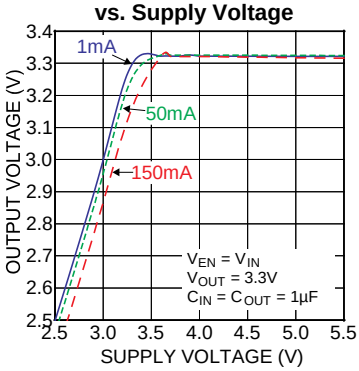


**Output Voltage vs. Temperature**

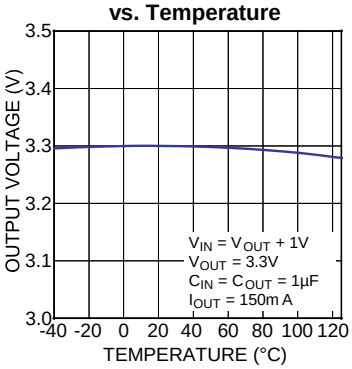

## Typical Characteristics (Continued)

**Current Limit vs. Supply Voltage**

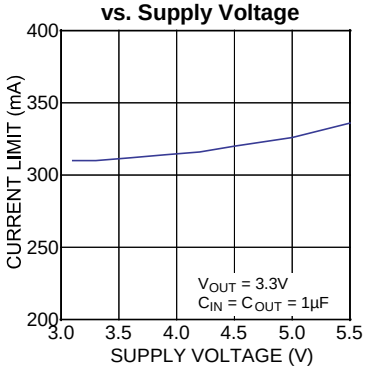


**Output Noise Spectral Density**

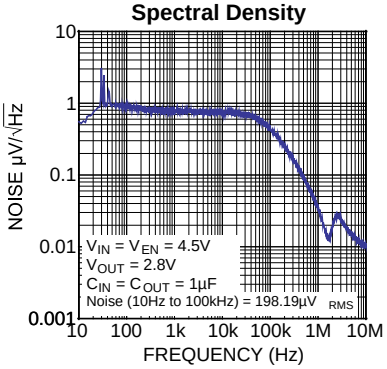

## Functional Characteristics

**Enable Turn-On**

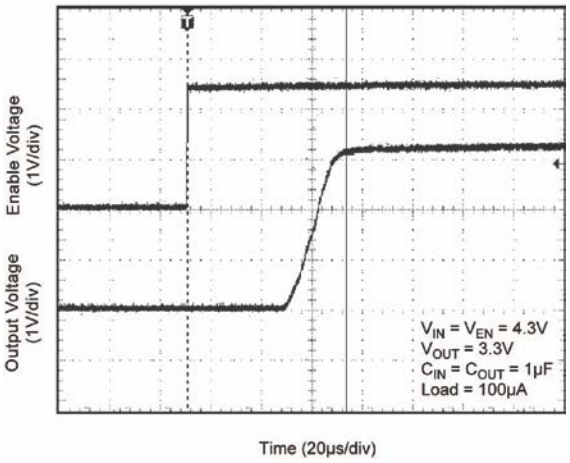


**Enable Turn-On**

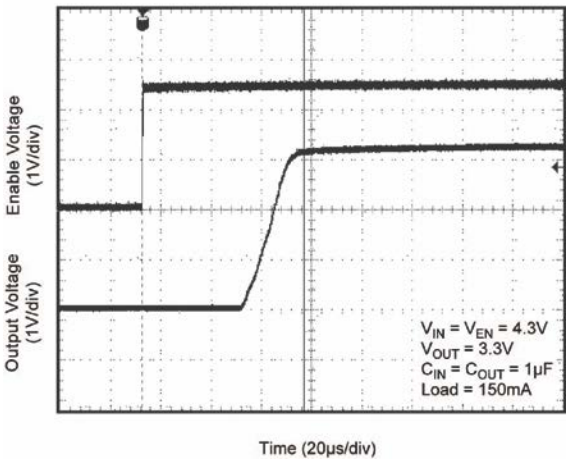


**Load Transient**

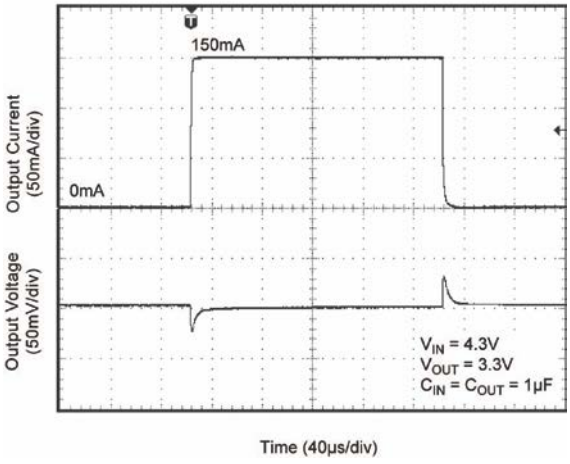


**Load Transient**

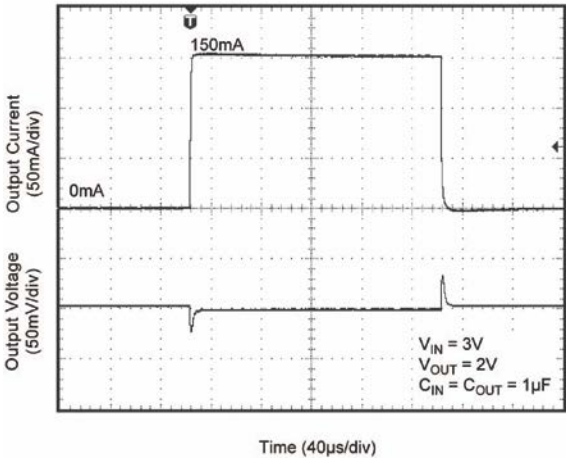


**Line Transient**

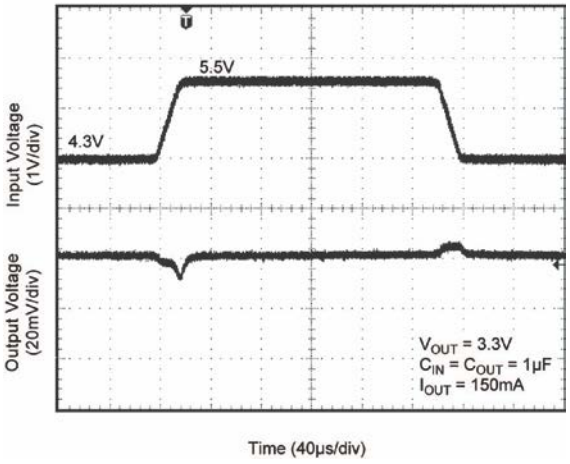


**MIC5366 Auto Discharge (No Load)**

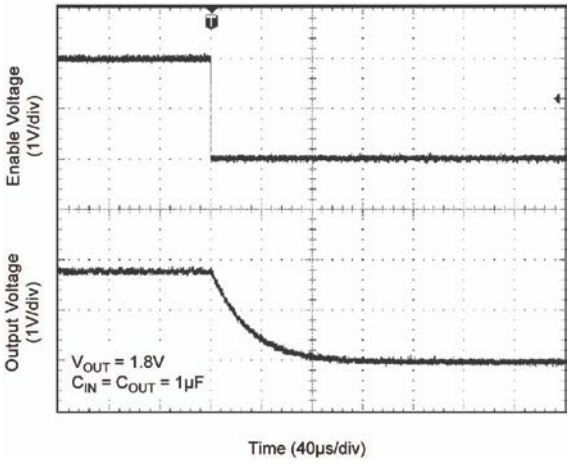

## Application Information

MIC5365 and MIC5366 are Low noise 150mA LDOs. The MIC5366 includes an auto-discharge circuit that is switched on when the regulator is disabled through the Enable pin. The MIC5365/6 regulator is fully protected from damage due to fault conditions, offering linear current limiting and thermal shutdown.

### Input Capacitor

The MIC5365/6 is a high-performance, high bandwidth device. An input capacitor of 1µF is required from the input to ground to provide stability. Low-ESR ceramic capacitors provide optimal performance at a minimum of space. Additional high-frequency capacitors, such as small-valued NPO dielectric-type capacitors, help filter out high-frequency noise and are good practice in any RF-based circuit. X5R or X7R dielectrics are recommended for the input capacitor. Y5V dielectrics lose most of their capacitance over temperature and are therefore, not recommended.

### Output Capacitor

The MIC5365/6 requires an output capacitor of 1µF or greater to maintain stability. The design is optimized for use with low-ESR ceramic chip capacitors. High ESR capacitors are not recommended because they may cause high frequency oscillation. The output capacitor can be increased, but performance has been optimized for a 1µF ceramic output capacitor and does not improve significantly with larger capacitance.

X7R/X5R dielectric-type ceramic capacitors are recommended because of their temperature performance. X7R-type capacitors change capacitance by 15% over their operating temperature range and are the most stable type of ceramic capacitors. Z5U and Y5V dielectric capacitors change value by as much as 50% and 60%, respectively, over their operating temperature ranges. To use a ceramic chip capacitor with Y5V dielectric, the value must be much higher than an X7R ceramic capacitor to ensure the same minimum capacitance over the equivalent operating temperature range.

### No-Load Stability

Unlike many other voltage regulators, the MIC5365/6 will remain stable and in regulation with no load. This is especially important in CMOS RAM keep-alive applications.

### Enable/Shutdown

The MIC5365/6 comes with an active-high enable pin that allows the regulator to be disabled. Forcing the enable pin low disables the regulator and sends it into a “zero” off-mode-current state. In this state, current consumed by the regulator goes nearly to zero. Forcing the enable pin high enables the output voltage. The active-high enable pin uses CMOS technology and the enable pin cannot be left floating; a floating enable pin may cause an indeterminate state on the output.

### Thermal Considerations

The MIC5365/6 is designed to provide 150mA of continuous current in a very small package. Maximum ambient operating temperature can be calculated based on the output current and the voltage drop across the part. For example if the input voltage is 3.6V, the output voltage is 2.8V, and the output current = 150mA. The actual power dissipation of the regulator circuit can be determined using the equation:

$$P_D = (V_{IN} – V_{OUT1}) I_{OUT} + V_{IN} I_{GND}$$

Because this device is CMOS and the ground current is typically <100µA over the load range, the power dissipation contributed by the ground current is < 1% and can be ignored for this calculation:

$$P_D = (3.6V – 2.8V) \times 150mA$$

$$P_D = 0.120W$$

To determine the maximum ambient operating temperature of the package, use the junction-to-ambient thermal resistance of the device and the following basic equation:

$$P_{D(MAX)} = \left( \frac{T_{J(max)} - T_A}{\theta_{JA}} \right)$$

$T_{J(max)}$ = 125°C, the maximum junction temperature of the die, $\theta_{JA}$ thermal resistance = 250°C/W for the YMT package, 256.5°C/W for the SC-70-5 package and 235°C/W for the MIC5365/6 in the TSOT23-5 package .

Substituting $P_D$ for $P_{D(max)}$ and solving for the ambient operating temperature will give the maximum operating conditions for the regulator circuit. The junction-to-ambient thermal resistance for the minimum footprint is 250°C/W.

The maximum power dissipation must not be exceeded for proper operation.

For example, when operating the MIC5365-2.8YMT at an input voltage of 3.6V and 150mA load with a minimum footprint layout, the maximum ambient operating temperature $T_A$ can be determined as follows:

$$0.120W = (125°C - T_A)/(250°C/W)$$
$$T_A = 95°C$$

Therefore the maximum ambient operating temperature of 95°C is allowed in a 1mm x 1mm MLF package. For a full discussion of heat sinking and thermal effects on voltage regulators, refer to the "Regulator Thermals" section of *Micrel's Designing with Low-Dropout Voltage Regulators* handbook. This information can be found on Micrel's website at:

http://www.micrel.com/_PDF/other/LDOBk_ds.pdf

## Typical Application (YMT)

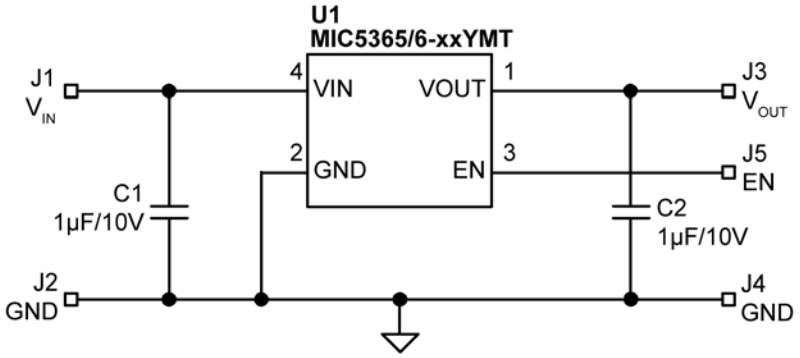


## Bill of Materials

| Item | Part Number | Manufacturer | Description | Qty. |
|---|---|---|---|---|
| C1, C2 | GRM155R61A105KE15D | Murata[1] | Capacitor, 1µF Ceramic, 10V, X5R, Size 0402 | 2 |
| **U1** | **MIC5365/6-xxYMT** | **Micrel, Inc.[2]** | **High-Performance Single 150mA LDO** | **1** |

**Notes:**

1. Murata: www.murata.com.
2. **Micrel, Inc.: www.micrel.com.**

## Typical Application (YC5)

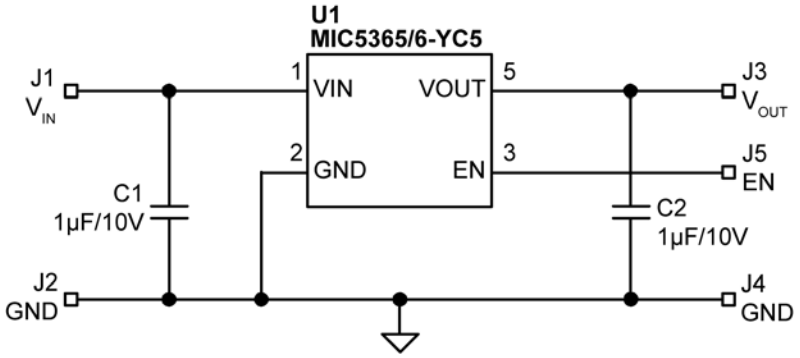


## Bill of Materials

| Item | Part Number | Manufacturer | Description | Qty. |
|---|---|---|---|---|
| C1, C2 | C1005X5R1A105K | TDK(1) | Capacitor, 1µF Ceramic, 10V, X5R, Size 0402 | 2 |
| **U1** | **MIC5365/6-xxYC5** | **Micrel, Inc.(2)** | **High-Performance Single 150mA LDO** | **1** |

**Notes:**

1. TDK: www.tdk.com.
2. **Micrel, Inc.: www.micrel.com.**

## Typical Application (YD5)

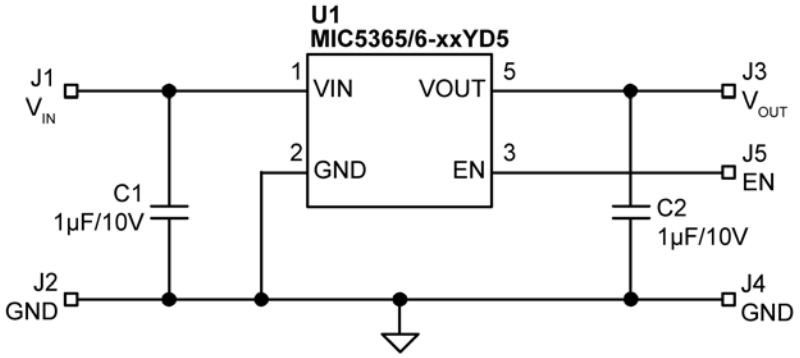


## Bill of Materials

| Item | Part Number | Manufacturer | Description | Qty. |
|---|---|---|---|---|
| C1, C2 | C1005X5R1A105K | TDK(1) | Capacitor, 1µF Ceramic, 10V, X5R, Size 0402 | 2 |
| **U1** | **MIC5365/6-xxYD5** | **Micrel, Inc.(2)** | **High-Performance Single 150mA LDO** | **1** |

**Notes:**

1. TDK: www.tdk.com.
2. **Micrel, Inc.: www.micrel.com.**

## PCB Layout Recommendations (1mm x 1mm Thin MLF)

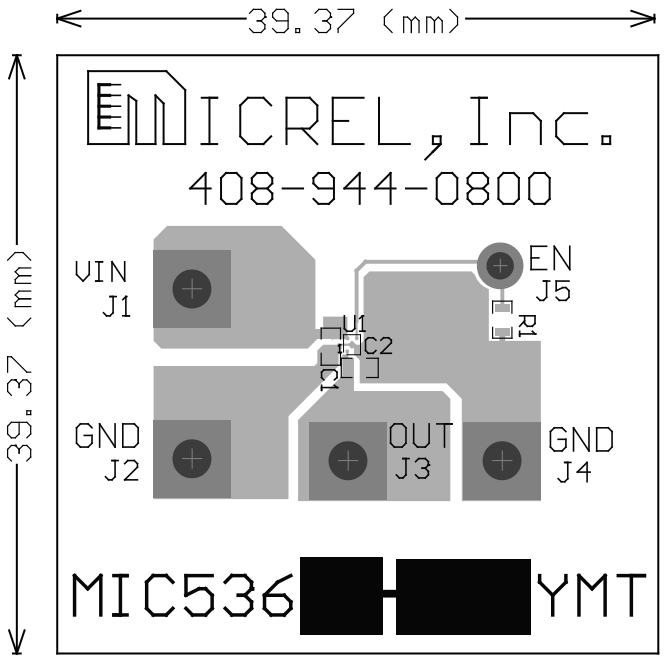


**Top Layer**

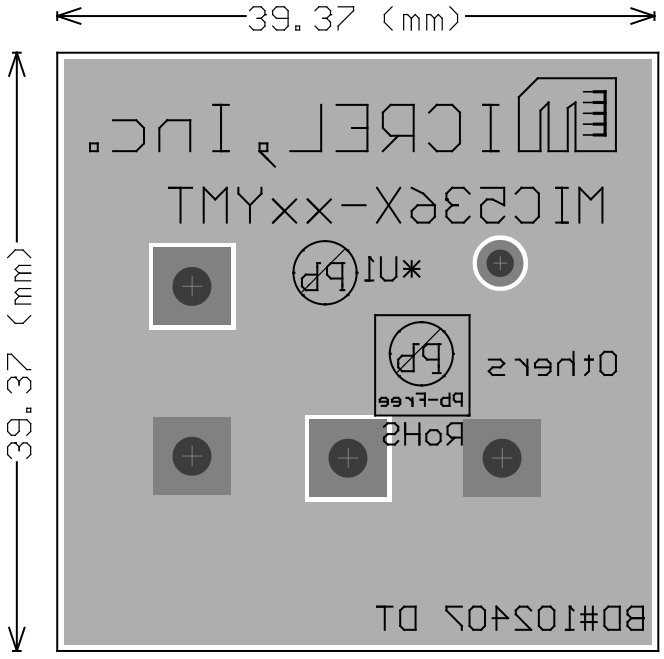


**Bottom Layer**

## PCB Layout Recommendations (SC-70-5)

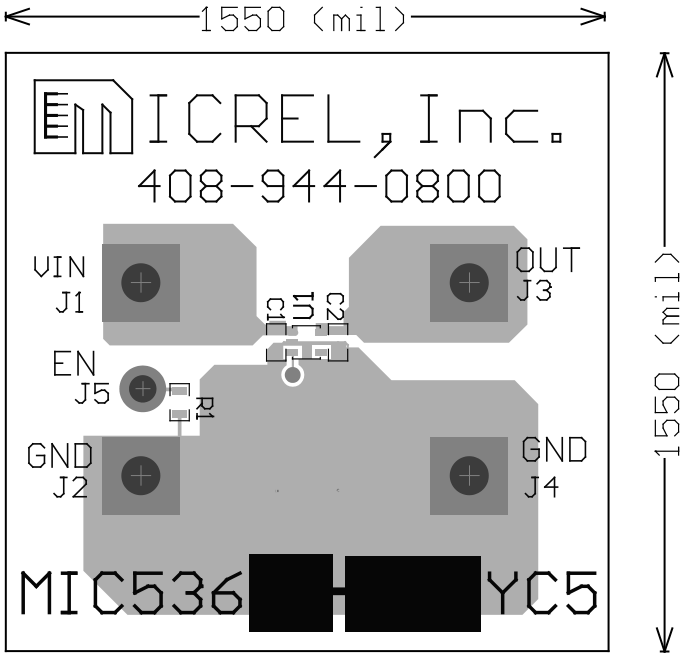


**Top Layer**

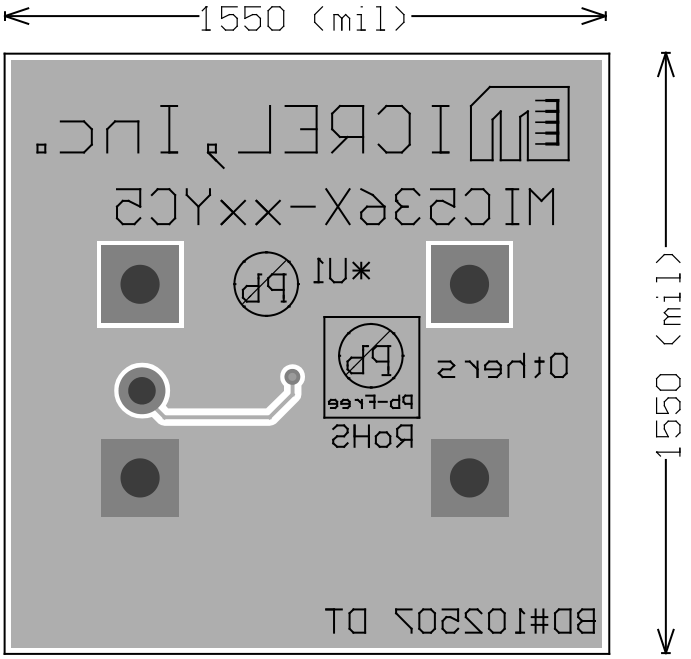


**Bottom Layer**

## Package Information[1]

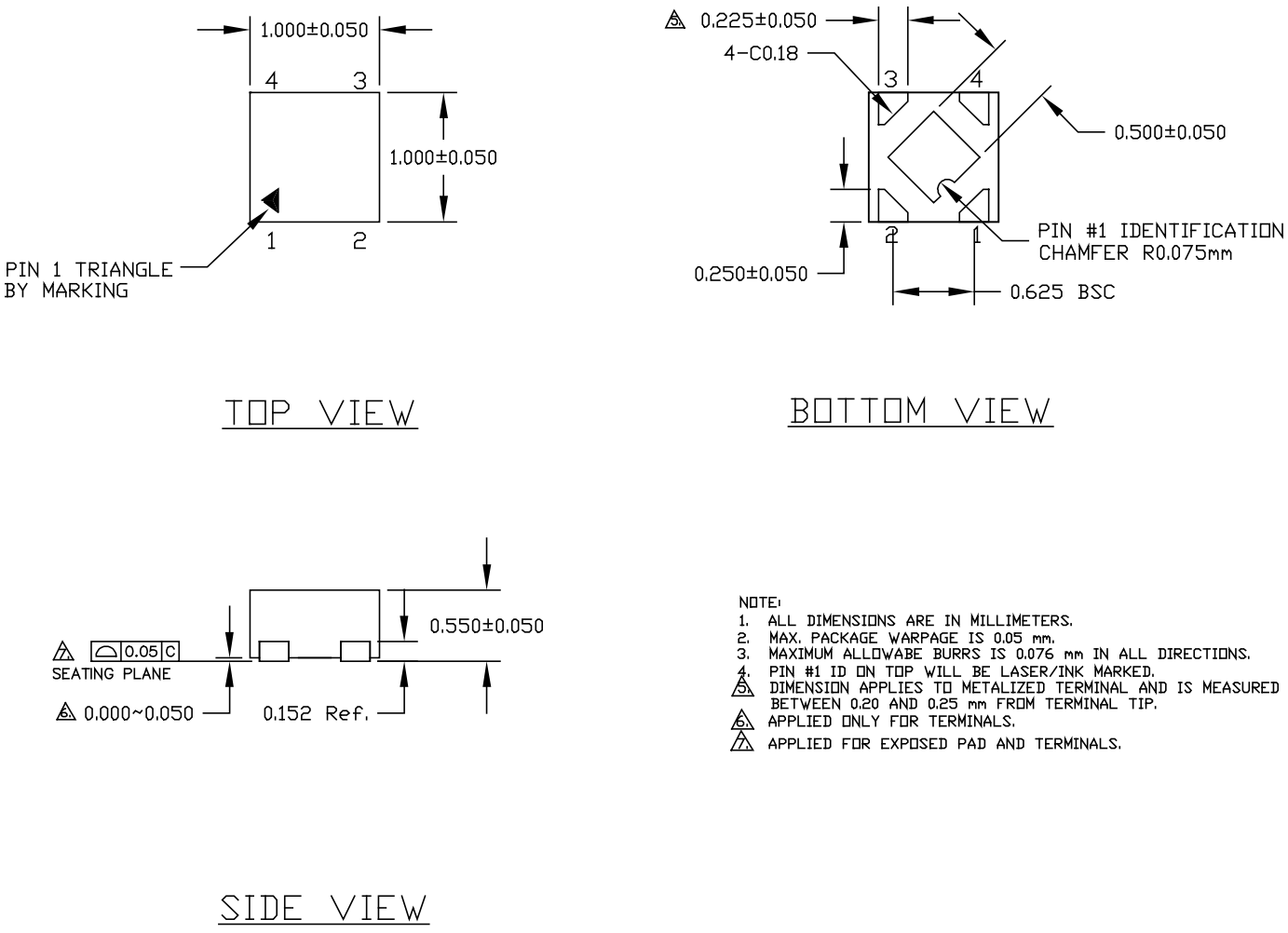


**4-Pin 1mm × 1mm Thin MLF (MT)**

**Note:**

1. Package information is correct as of the publication date. For updates and most current information, go to www.micrel.com.

## Package Information[1] (Continued)

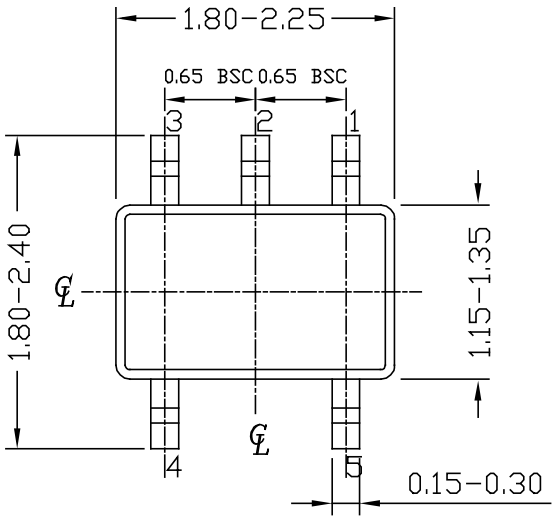


TOP VIEW

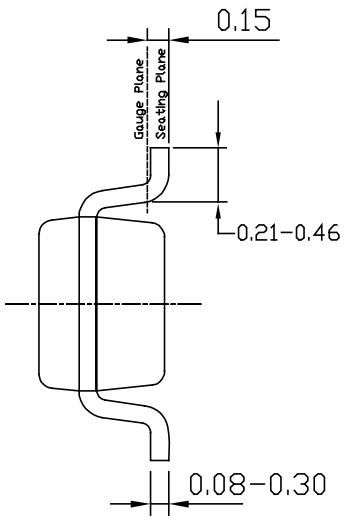


END VIEW

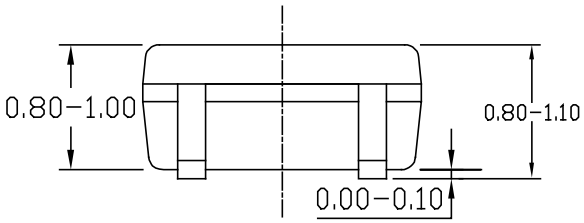


SIDE VIEW

NOTE:
1. ALL DIMENSIONS ARE IN MILLIMETERS.
2. DIMENSIONS ARE INCLUSIVE OF PLATING.
3. DIMENSIONS ARE EXCLUSIVE OF MOLD FLASH & METAL BURR.

**5-Pin SC-70 (C5)**

## Package Information[1] (Continued)

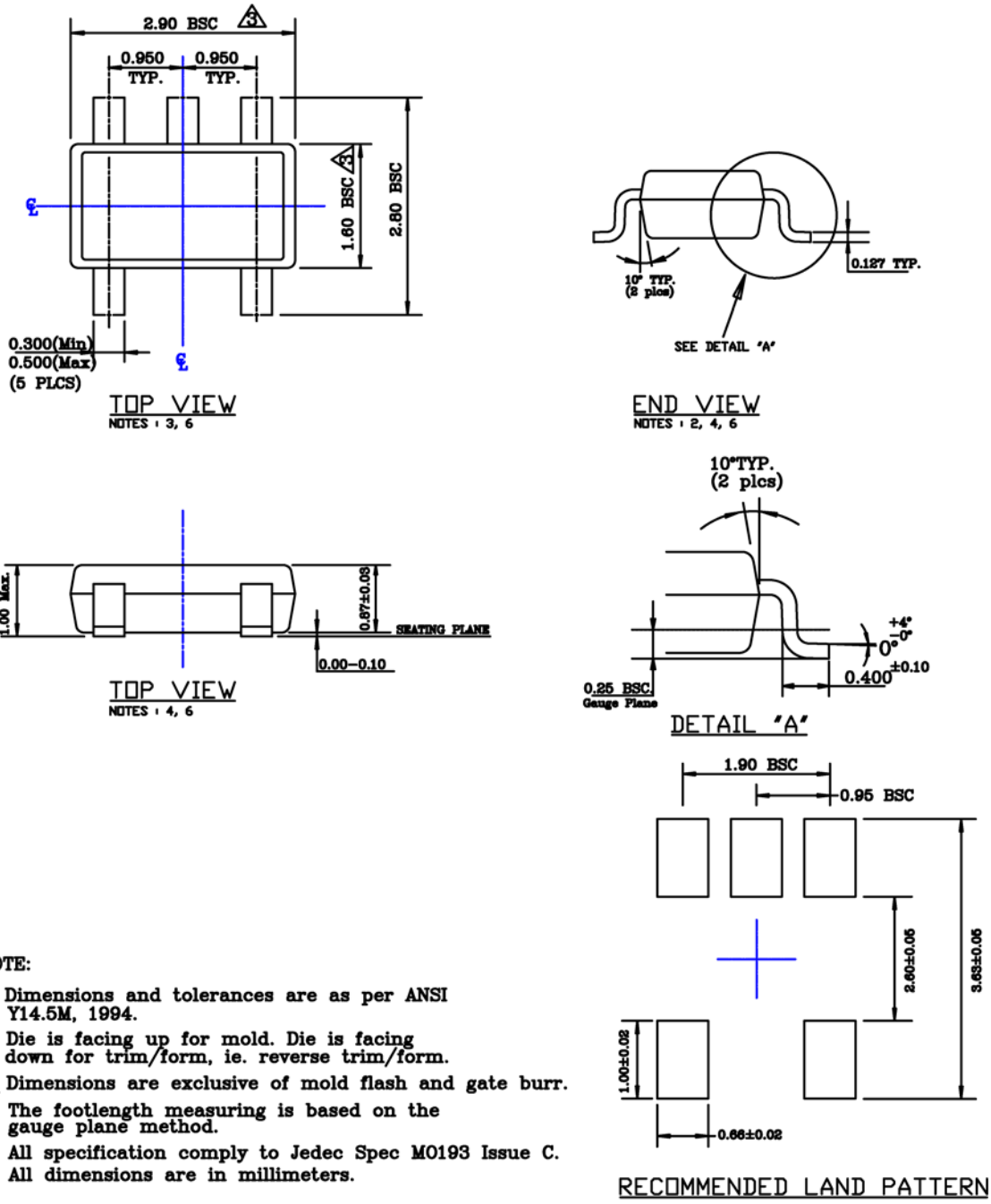


NOTE:

1. Dimensions and tolerances are as per ANSI Y14.5M, 1994.
2. Die is facing up for mold. Die is facing down for trim/form, ie. reverse trim/form.
3. Dimensions are exclusive of mold flash and gate burr.
4. The footlength measuring is based on the gauge plane method.
5. All specification comply to Jedec Spec M0193 Issue C.
6. All dimensions are in millimeters.

**5-Pin Thin SOT23 (D5)**

**MICREL, INC. 2180 FORTUNE DRIVE SAN JOSE, CA 95131 USA**
TEL +1 (408) 944-0800 FAX +1 (408) 474-1000 WEB http://www.micrel.com

Micrel makes no representations or warranties with respect to the accuracy or completeness of the information furnished in this data sheet. This information is not intended as a warranty and Micrel does not assume responsibility for its use. Micrel reserves the right to change circuitry, specifications and descriptions at any time without notice. No license, whether express, implied, arising by estoppel or otherwise, to any intellectual property rights is granted by this document. Except as provided in Micrel's terms and conditions of sale for such products, Micrel assumes no liability whatsoever, and Micrel disclaims any express or implied warranty relating to the sale and/or use of Micrel products including liability or warranties relating to fitness for a particular purpose, merchantability, or infringement of any patent, copyright or other intellectual property right.

Micrel Products are not designed or authorized for use as components in life support appliances, devices or systems where malfunction of a product can reasonably be expected to result in personal injury. Life support devices or systems are devices or systems that (a) are intended for surgical implant into the body or (b) support or sustain life, and whose failure to perform can be reasonably expected to result in a significant injury to the user. A Purchaser's use or sale of Micrel Products for use in life support appliances, devices or systems is a Purchaser's own risk and Purchaser agrees to fully indemnify Micrel for any damages resulting from such use or sale.

© 2008 Micrel, Incorporated.

ENTEGRECİ

Bu belge www.entegreci.com üzerinden sunulmaktadır.

# Elektronik komponent tedarikinde Entegreci

Entegreci, Eskişehir merkezli, Türkiye geneline satış yapan bir elektronik komponent mağazasıdır. Entegreler (IC), mikrodenetleyiciler, transistörler, diyotlar, pasif elemanlar, konnektörler, modüller ve geliştirme kartları tek adetten seri üretim adetlerine kadar satılır. Ürün sayfalarında güncel stok durumunu, fiyatı ve datasheet bağlantısını bulabilirsiniz.

### Parça koduyla arama

Üretici parça numarasını yazın; stok ve fiyatı hemen görün.

**www.entegreci.com**

### Ürün kategorileri

Entegreden kapasitöre tüm elektronik komponent kategorileri.

**Kategorilere göz atın**

### Üreticiler

Aradığınız üreticinin ürünlerini tek sayfada inceleyin.

**Üreticileri görün**

### Toplu alım ve teklif

Listede olmayan ya da yüksek adetli parçalar için teklif isteyin.

**Teklif isteyin**

**www.entegreci.com** | **destek@entegreci.com** | **0850 305 90 34**

Entegreci is an online electronic components store based in Türkiye. Search by manufacturer part number to see stock, prices and datasheets for integrated circuits, microcontrollers, transistors, passive components and connectors, or request a quote for parts that are not listed.

Bu sayfa Entegreci tarafından eklenmiştir. Belgenin önceki sayfaları asıl yayıncısına aittir ve içeriği değiştirilmemiştir; en güncel sürüm için belgenin yayıncısına başvurun.