MIC59300

Ultra High Speed 3A LDO

General Description

The MIC59300 is a high-bandwidth, low-dropout, 3A linear voltage regulator ideal for powering core voltages of low-power microprocessors. The MIC59300 implements a dual supply configuration allowing for a very low output impedance and a very fast transient response.

The MIC59300 requires a bias input supply and a main input supply, allowing for ultra-low input voltages on the main supply rail. The device operates from an input supply of 1.0V to 3.8V and bias supply between 3V and 5.5V. The MIC59300 offers fixed output voltages and adjustable output voltages down to 0.5V.

The MIC59300 requires a minimum output capacitance for stability, working optimally with small ceramic capacitors.

The MIC59300 is available in a 5-pin TO-263 and an 8-pin EPAD SOIC package and its junction temperature range is –40°C to +125°C.

Data sheets and support documentation can be found on Micrel's web site at: www.micrel.com.

Features

- Input voltage range:
  - V_{IN} = 1.0V to 3.8V
  - V_{BIAS} = 3.0V to 5.5V
- Stable with 1µF ceramic capacitor
- ±1% initial tolerance
- Maximum dropout voltage of 500mV over temperature
- Adjustable output voltage down to 0.5V
- Ultra fast transient response
- Excellent line and load regulation specifications
- Logic controlled shutdown option
- Thermal shutdown and current limit protection
- Junction temperature range: –40°C to +125°C
- TO-263 & 8-pin EPAD SOIC
- Pin Compatible Upgrade to MIC49300

Applications

- Telecommunications processors
- Graphics processors
- Computer peripheral cards
- Logic IC power supply
- SMPS post regulators
- Microprocessors
- Digital TV's

Typical Application

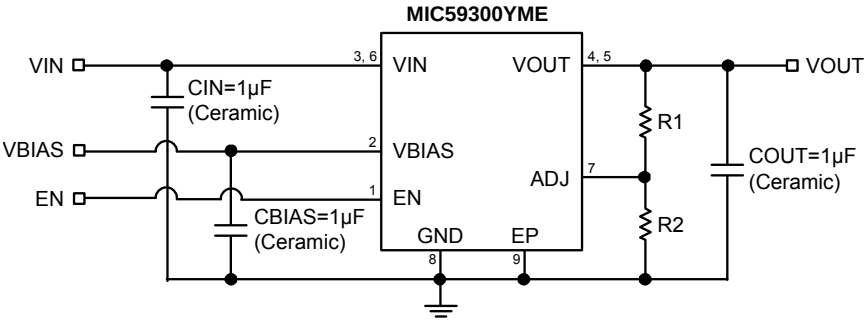

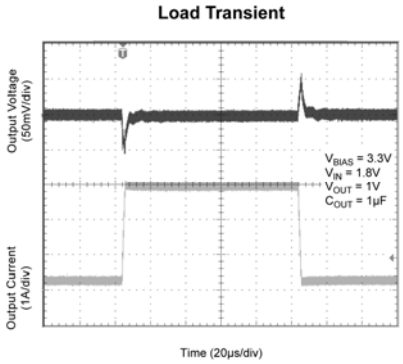

Ordering Information

Part Number	Voltage[1]	Junction Temperature Range	Package	Lead Finish
MIC59300-1.2YME	1.2V	–40°C to +125°C	8-Pin EPAD SOIC	RoHS Compliant
MIC59300YME	Adj.	–40°C to +125°C	8-Pin EPAD SOIC	RoHS Compliant
MIC59300-1.2WU	1.2V	–40°C to +125°C	5-Pin TO-263	RoHS Compliant
MIC59300WU	Adj.	–40°C to +125°C	5-Pin TO-263	RoHS Compliant

Note:

1. Other Voltage available. Contact Micrel for detail.

Pin Configuration

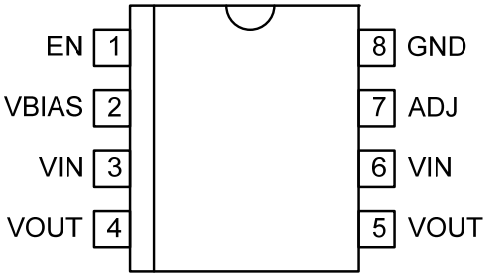

8-Pin EPAD SOIC
MIC59300YME

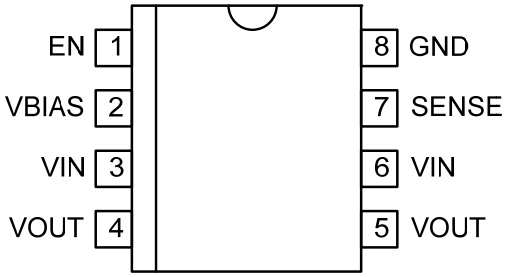

8-Pin EPAD SOIC
MIC59300-1.2YME

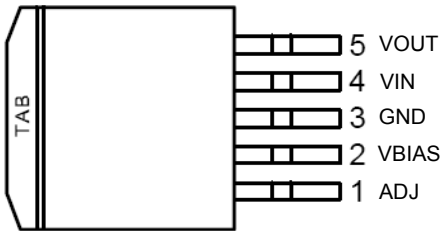

5-Pin TO-263
MIC59300WU

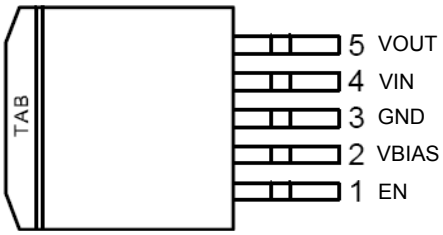

5-Pin TO-263
MIC59300-1.2WU

Pin Description

Pin Number SOIC-8	Pin Number TO-263	Pin Name	Pin Function
1	1 (fixed)	EN	Enable (Input): CMOS compatible input. Logic high = enable, logic low = shutdown.
2	2	VBIAS	Input bias voltage for powering all circuitry on the regulator with the exception of the output power device.
3, 6	4	VIN	Input voltage needed for the output power device.
4, 5	5	VOUT	Regulator Output.
7 (adjustable)	1 (adjustable)	ADJ	Adjustable regulator feedback input. Connect to resistor voltage divider.
7 (fixed)		SENSE	Connect to VOUT for fixed voltage options.
8	3	GND	Ground.
9	6	EP	Exposed Pad: Connect to ground pin.

Absolute Maximum Ratings[1]

Supply Voltage (V_{IN}) ..... –0.3V to +4V
Bias Supply Voltage (V_{BIAS}) ..... –0.3V to +6V
Enable Input Voltage (V_{EN}) ..... –0.3V to V_{BIAS}
Power Dissipation ..... Internally Limited
Storage Temperature (T_s) ..... –65°C to +150°C
ESD Rating[3] 3kV

Operating Ratings[2]

Supply Voltage (V_{IN}) ..... 1V to 3.8V
Bias Supply Voltage (V_{BIAS}) ..... 3V to 5.5V
Enable Input Voltage (V_{EN}) ..... 0V to V_{BIAS}
Junction Temperature (T_J) ..... –40°C ≤ T_J ≤ +125°C
Package Thermal Resistance
EPAD SOIC (θ_{JA}) ..... 41°C/W
TO-263 (θ_{JC}) ..... 6.3°C/W

Electrical Characteristics[4]

T_A = 25°C with V_{BIAS} = V_{OUT} + 2.2V; V_{IN} = V_{OUT} + 1V; I_{LOAD} = 10mA; **bold** values indicate 0°C ≤ T_J ≤ 85°C, unless otherwise specified.

Parameter	Condition	Min	Typ	Max	Units
Output Voltage Accuracy (Fixed Voltage Options)	Room temperature	1		1	%
	Over temperature range	**2**		**2**	%
Line Regulation (V_{IN})	V_{IN} = V_{OUT} + 1V to 3.8V		0.0015	0.1	%/V
Line Regulation (V_{BIAS})	V_{BIAS} = 3V to 5.5V (V_{OUT} < 0.8V) V_{BIAS} = V_{OUT} + 2.2V to 5.5V (V_{OUT} ≥ 0.8V)		0.035	**0.3**	%/V
Feedback Voltage (Adjustable Output Voltage)	Room temperature	0.495	0.5	0.505	V
	Over temperature range	**0.490**	0.5	**0.510**	V
Output Voltage Load Regulation	I_L = 10mA to 3A (SOIC)		0.15	**0.5**	%
	I_L = 10mA to 3A (TO-263)		0.15	0.5	%
V_{IN} – V_{OUT}; Dropout Voltage	I_L = 1.5A		93	**250**	mV
	I_L = 3A (SOIC)		205	**400**	mV
	I_L = 3A (TO-263)		205	**500**	mV
V_{BIAS} – V_{OUT}; Dropout Voltage	I_L = 3A		0.91	**2.1**	V
V_{BIAS} supply current	V_{EN} = 2V, I_L = 100mA V_{EN} = 2V, I_L = 3A		2 30	**7.5** **150**	mA mA
V_{BIAS} shutdown current	V_{EN} = 0V		0.1	1	µA
V_{IN} shutdown current	V_{EN} = 0V		0.1	1	µA
FB bias current	Adj only		0.02	**1**	µA
UVLO	V_{BIAS} rising	**2.7**	2.85	**3.0**	V
	Hysteresis		100		mV
Current Limit	V_{OUT} = 0V	**3.3**	4.7	**9.0**	A
Enable Input					
Enable Input Threshold	Regulator enable Regulator shutdown	**1.6**	0.85 0.75	 **0.3**	V V
Enable Pin Input Current	Independent of state		0.002	**1**	µA
AC Response					
Large signal bandwidth			1		MHz
PSRR (BIAS) at 10kHz	V_{BIAS} = 3.3V, I_{OUT} = 1.5A		45		dB
PSRR (IN) at 10kHz	V_{IN} = V_{OUT} + 1V, I_{OUT} = 1.5A V_{IN} = V_{OUT} + 0.3V, I_{OUT} = 1.5A		65 55		dB dB
Thermal Shutdown			145		°C

Thermal Shutdown Hysteresis			10		°C
Turn-on Time			90	**300**	µs

Notes:

1. Exceeding the absolute maximum rating may damage the device.
2. The device is not guaranteed to function outside its operating rating.
3. Devices are ESD sensitive. Handling precautions recommended. Human body model, 1.5kΩ in series with 100pF.
4. Specification for packaged product only.

Typical Characteristics

Power Supply Rejection Ratio (V_{IN})

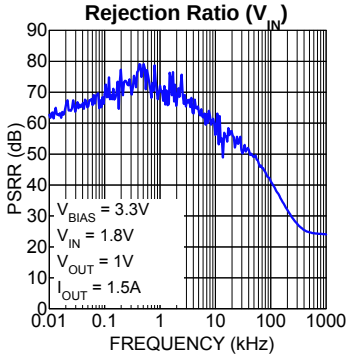

Power Supply Rejection Ratio (V_{BIAS})

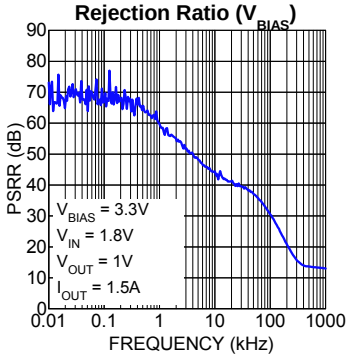

Dropout Voltage (V_{IN})

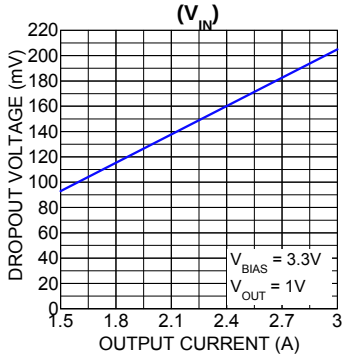

Dropout Voltage (V_{BIAS})

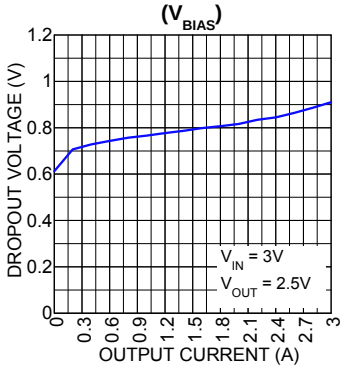

Dropout Voltage vs. Temperature (V_{IN})

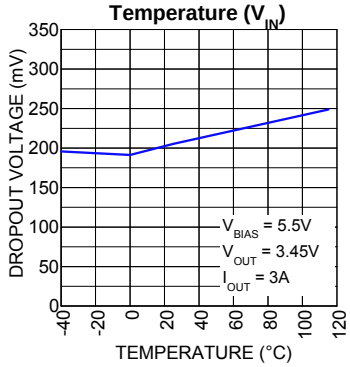

Dropout Voltage vs. Temperature (V_{BIAS})

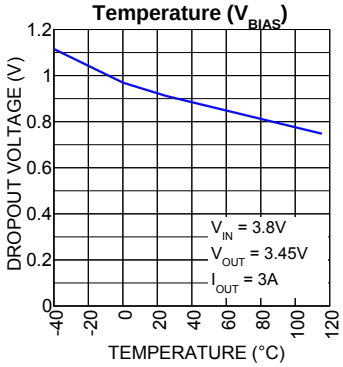

Dropout Characteristics (V_{BIAS})

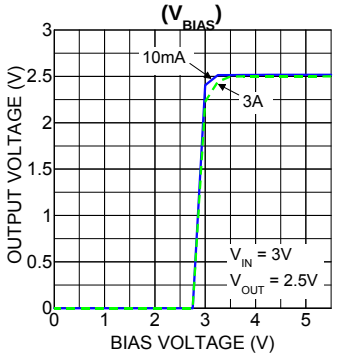

Load Regulation

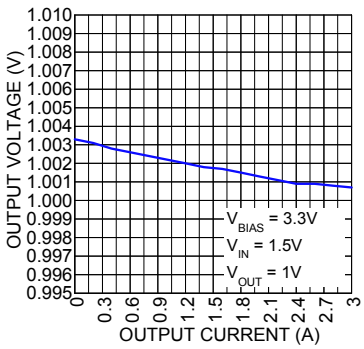

Bias Current vs. Temperature

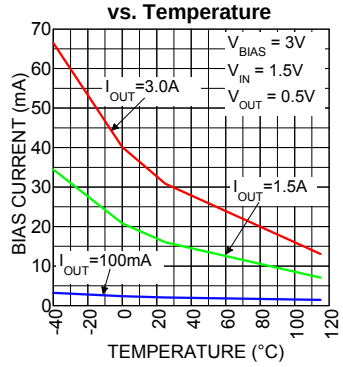

Bias Current vs. Output Current

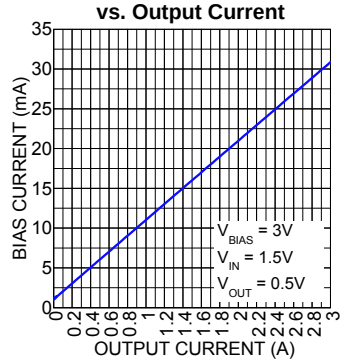

Ground Current vs. Bias Voltage

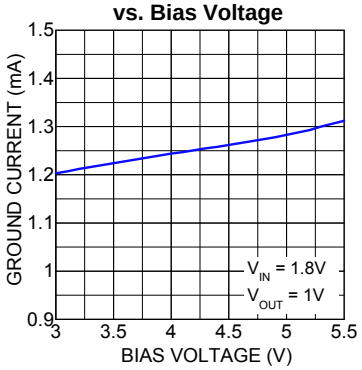

Feedback Voltage vs. Input Voltage

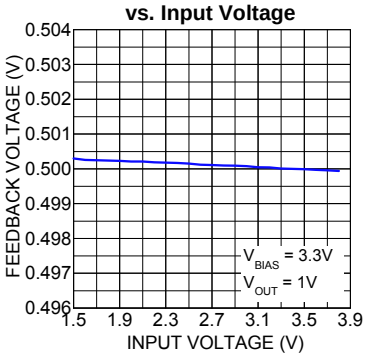

Typical Characteristics (continued)

Feedback Voltage vs. Bias Voltage

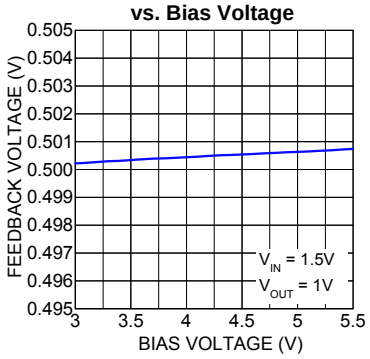

Feedback Voltage vs. Temperature

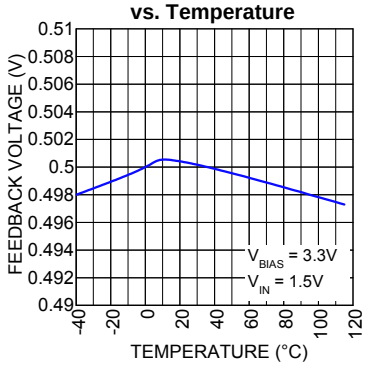

Enable Threshold vs. Bias Voltage

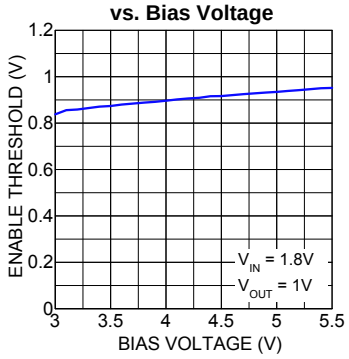

Functional Characteristics

Line Transient (V_{IN})

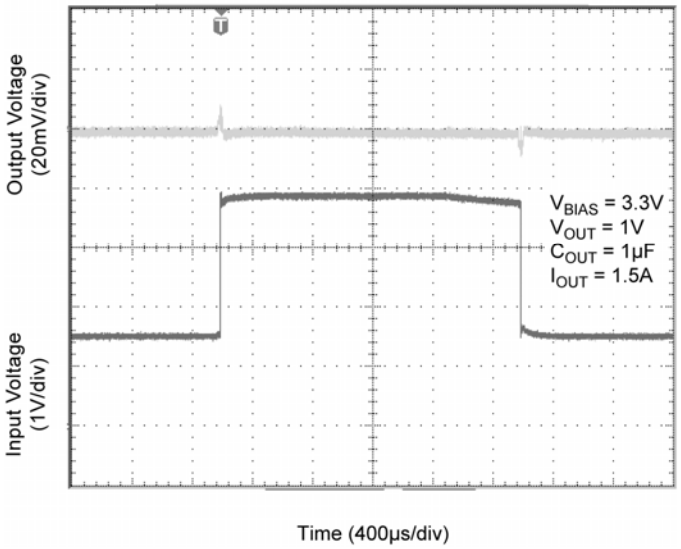

Line Transient (V_{BIAS})

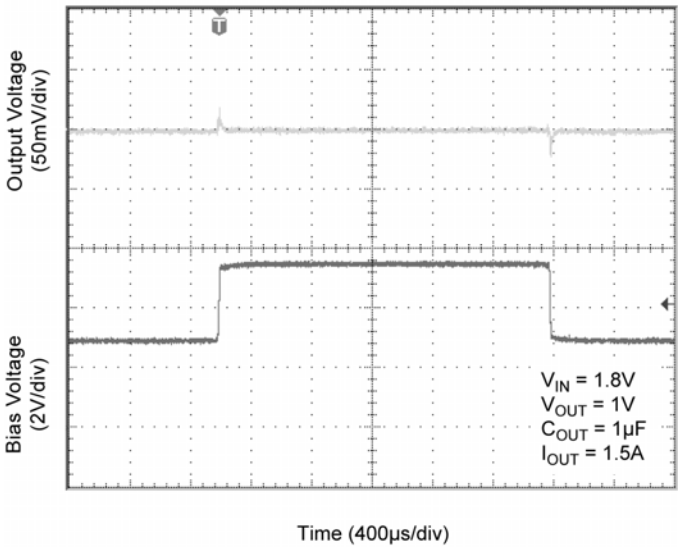

Load Transient

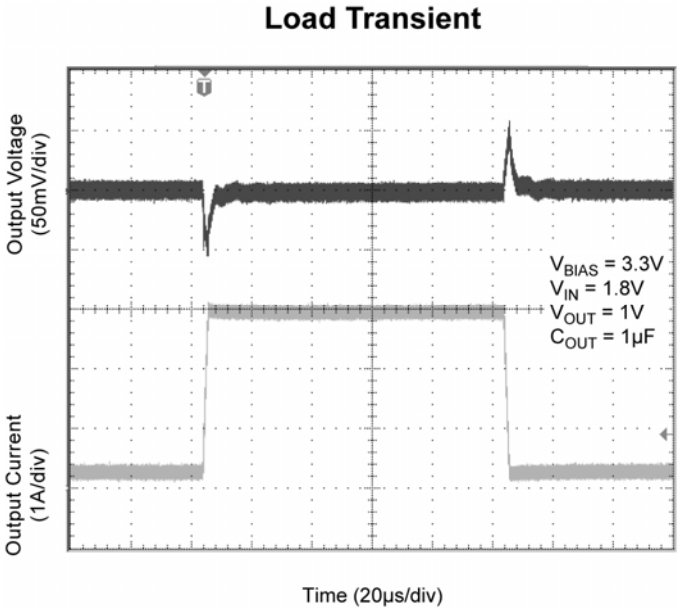

Functional Diagram

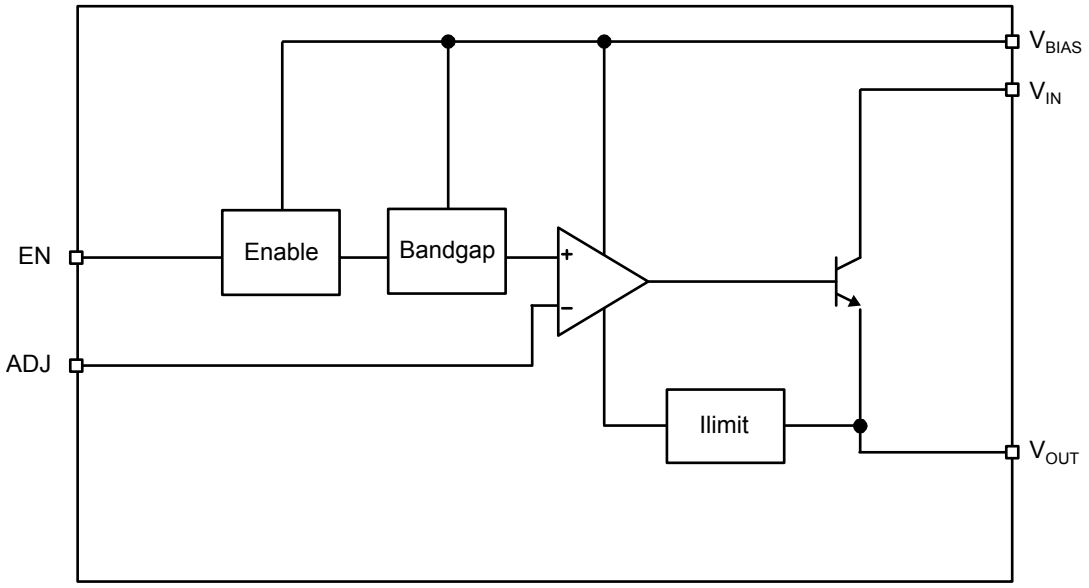

MIC59300 (Adj) Block Diagram

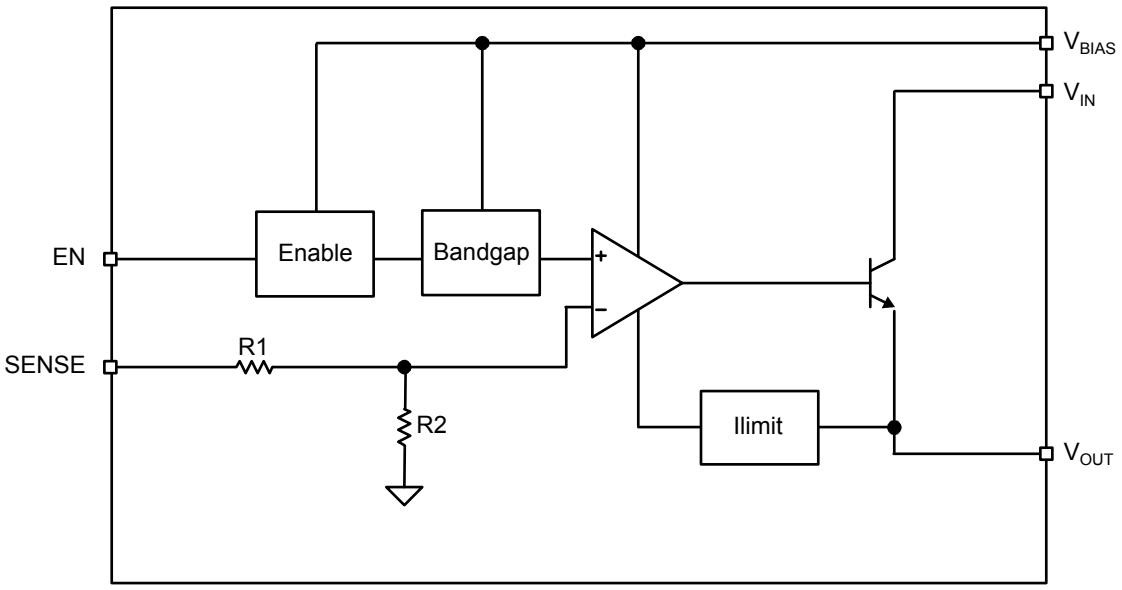

MIC59300 (Fixed) Block Diagram

Application Information

The MIC59300 is an ultra-high performance, low-dropout linear regulator designed for high current applications requiring a fast transient response. The MIC59300 utilizes two input supplies, significantly reducing dropout voltage, making it perfect for low-voltage, DC-to-DC conversion. The MIC59300 requires a minimum number of external components, and as a µCap regulator, the output is tolerant of virtually any type of capacitor, including ceramic type and tantalum type capacitors.

The MIC59300 regulator is fully protected from damage due to fault conditions, offering linear current limiting and thermal shutdown.

Bias Supply Voltage

V_{BIAS}, requiring relatively light current, provides power to the control portion of the MIC59300. V_{BIAS} requires approximately 30mA for a 3A load current. Dropout conditions require higher currents. Most of the biasing current is used to supply the base current to the pass transistor. The bias voltage allows the pass element to be driven into saturation, reducing the dropout to 205mV at a 3A load current. Bypassing on the bias pin is recommended to improve performance of the regulator during line and load transients. Small ceramic capacitors from VBIAS-to-ground help reduce high frequency noise from being injected into the control circuitry from the bias rail and constitute good design practice. Good bypass techniques typically include one larger capacitor such as 1µF ceramic and smaller valued capacitors such as 0.01µF or 0.001µF in parallel with that larger capacitor to decouple the bias supply. The VBIAS input voltage must be 2.1V above the output voltage with a minimum VBIAS input voltage of 3V.

Input Supply Voltage

V_{IN} provides the high current to the collector of the pass transistor. The minimum input voltage is 1.0V, allowing conversion from low voltage supplies.

Output Capacitor

The MIC59300 requires a minimum of output capacitance to maintain stability. However, proper capacitor selection is important to ensure desired transient response. The MIC59300 is specifically designed to be stable with virtually any capacitance value and ESR. A 1µF ceramic chip capacitor should satisfy most applications. Output capacitance can be increased without bound. See the "*Functional Characteristics*" for examples of load transient response.

X7R dielectric ceramic capacitors are recommended because of their temperature performance. X7R-type capacitors change capacitance by 15% over their operating temperature range and are the most stable type of ceramic capacitors. Z5U and Y5V dielectric capacitors change value by as much as 50% and 60% respectively over their operating temperature ranges. To use a ceramic chip capacitor with Y5V dielectric, the value must be much higher than an X7R ceramic or a tantalum capacitor to ensure the same capacitance value over the operating temperature range. Tantalum capacitors have a very stable dielectric (10% over their operating temperature range) and can also be used with this device.

Input Capacitor

An input capacitor of 1µF or greater is recommended when the device is more than 4 inches away from the bulk supply capacitance, or when the supply is a battery. Small, surface-mount, ceramic chip capacitors can be used for the bypassing. The capacitor should be placed within 1 inch of the device for optimal performance. Larger values will help to improve ripple rejection by bypassing the input to the regulator, further improving the integrity of the output voltage.

Thermal Design

Linear regulators are simple to use. The most complicated design parameters to consider are thermal characteristics. Thermal design requires the following application-specific parameters:

- Maximum ambient temperature (T_A)
- Output current (I_{OUT})
- Output voltage (V_{OUT})
- Input voltage (V_{IN})
- Ground current (I_{GND})

First, calculate the power dissipation (P_D) of the regulator from these numbers and the device parameters from this datasheet.

$$P_D = V_{IN} \times I_{IN} + V_{BIAS} \times I_{BIAS} - V_{OUT} \times I_{OUT}$$

The input current will be less than the output current at high output currents as the load increases. The bias current is a sum of base drive and ground current. Ground current is constant over load current. Then the heat sink thermal resistance is determined with this formula:

$$\theta_{SA} = \left(\frac{T_{J(MAX)} - T_A}{P_D} \right) - \left(\theta_{JC} + \theta_{CS} \right)$$

The heat sink may be significantly reduced in applications where the maximum input voltage is known and large compared with the dropout voltage. Use a series input resistor to drop excessive voltage and distribute the heat between this resistor and the regulator. The low-dropout properties of the MIC59300 allow significant reductions in regulator power dissipation and the associated heat sink without compromising performance. When this technique is employed, a

capacitor of at least 1µF is needed directly between the input and regulator ground. Refer to "*Application Note 9*" (http://www.micrel.com/_PDF/App-Notes/an-9.pdf) for further details and examples on thermal design and heat sink specification.

Minimum Load Current

The MIC59300, unlike most other high current regulators, does not require a minimum load to maintain output voltage regulation.

Adjustable Regulator Design

The MIC59300 adjustable version allows programming the output voltage anywhere between 0.5Vand 3.3V. Two resistors are used. The resistor value between V_{OUT} and the adjust pin should not exceed 10kΩ. Larger values can cause instability. The resistor values are calculated by:

$$R_1 = R_2 \times \left(\frac{V_{OUT}}{0.5} - 1 \right)$$

where V_{OUT} is the desired output voltage.

Enable

An active high enable input (EN) allows on-off control of the regulator. Current drain reduces to "zero" when the device is shutdown, with only microamperes of leakage current. The EN input has CMOS compatible thresholds for simple logic interfacing. EN may be directly tied to V_{BIAS} and pulled up to the maximum supply voltage.

EPad

The exposed pad on the bottom of the SOIC part must be connected to ground.

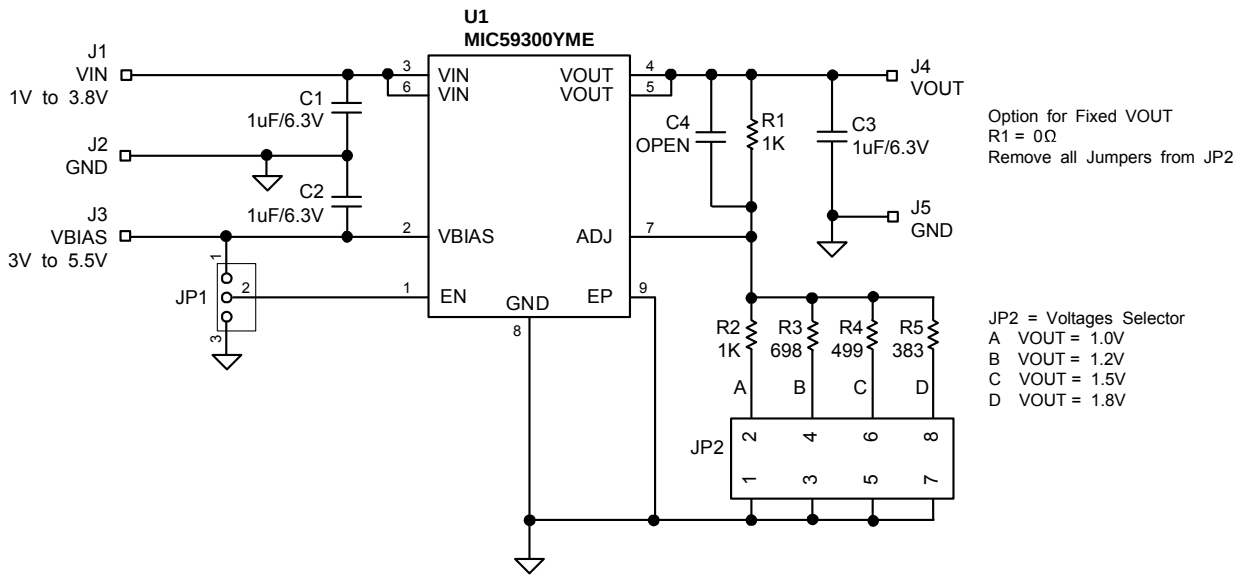

Bill of Materials

Item	Part Number	Manufacturer	Description	Qty.
C1,C2 C3	C1608X5R0J105K	TDK[1]	1uF Ceramic Capacitor X5R 0603 6.3V	3
	GRM188R60J105KA01D	Murata[2]		
	0603D105KAT2A	AVX[3]		
C4			Open	1
R1,R2	CRCW06031K00FKXX	Vishay[4]	1kΩ 1% 0603 Resistor	2
R3	CRCW0603698RFKXX	Vishay[4]	698Ω 1% 0603 Resistor	1
R4	CRCW0603499RFKXX	Vishay[4]	499Ω 1% 0603 Resistor	1
R5	CRCW0603383RFKXX	Vishay[4]	383Ω 1% 0603 Resistor	1
U1	**MIC59300YME**	**Micrel, Inc.[5]**	**Ultra High Speed 3A LDO**	**1**

Notes:

1. TDK: www.tdk.com
2. Murata Tel: www.murata.com
3. AVX Tel: www.avx.com
4. Vishay Tel: www.vishay.com
5. **Micrel, Inc.: www.micrel.com**

PCB Layout Recommendations

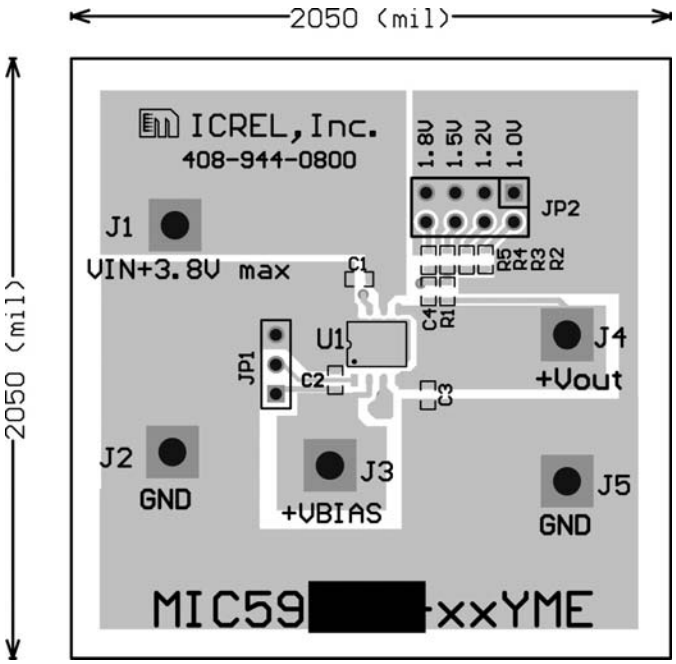

Top Layer

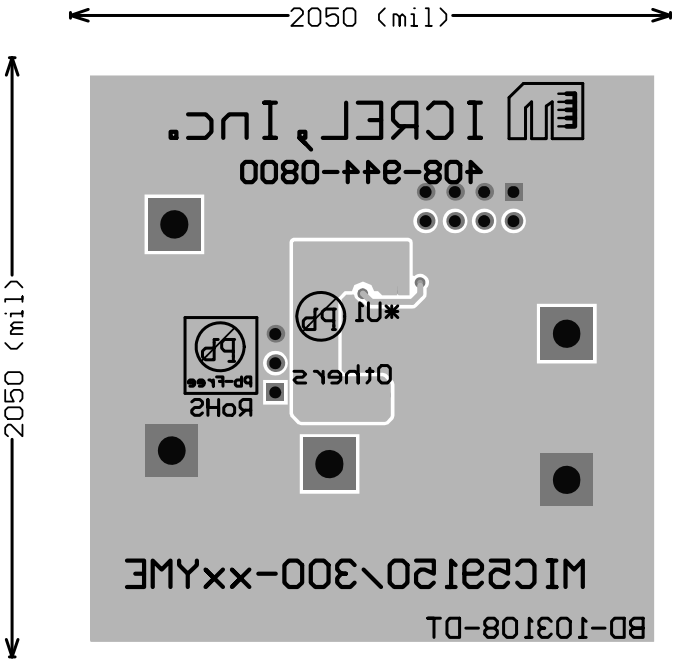

Bottom Layer

Package Information

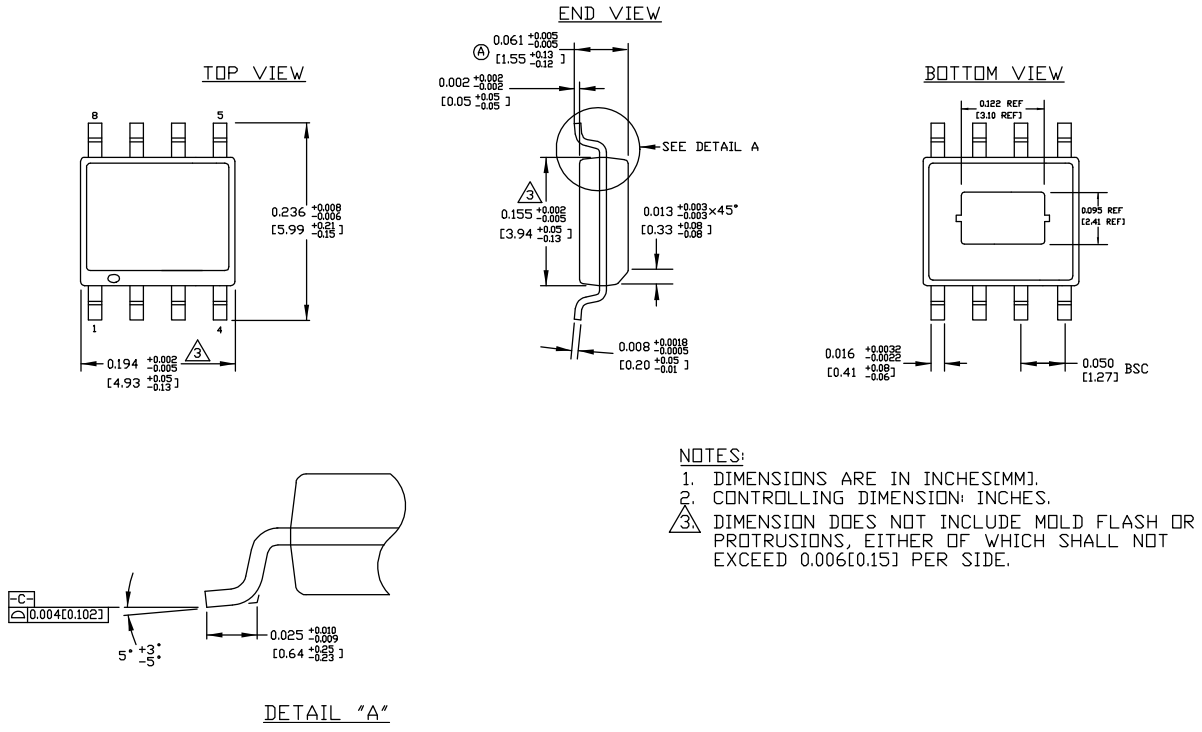

NOTES:
1. DIMENSIONS ARE IN INCHES[MM].
2. CONTROLLING DIMENSION: INCHES.
3. DIMENSION DOES NOT INCLUDE MOLD FLASH OR PROTRUSIONS, EITHER OF WHICH SHALL NOT EXCEED 0.006[0.15] PER SIDE.

8-Pin EPAD SOIC (ME)

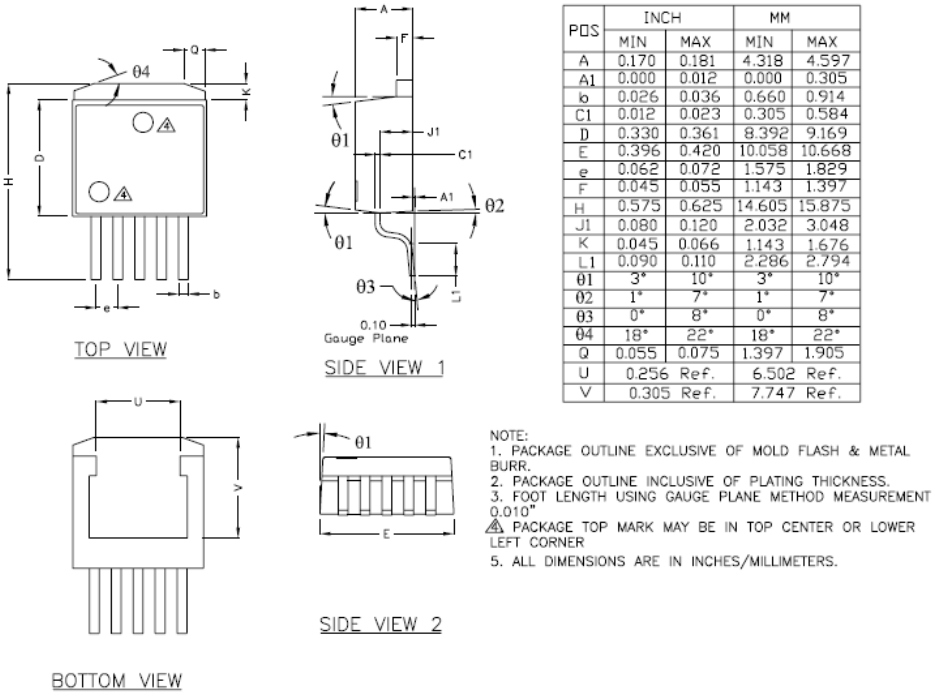

POS	INCH		MM	
	MIN	MAX	MIN	MAX
A	0.170	0.181	4.318	4.597
A1	0.000	0.012	0.000	0.305
b	0.026	0.036	0.660	0.914
C1	0.012	0.023	0.305	0.584
D	0.330	0.361	8.392	9.169
E	0.396	0.420	10.058	10.668
e	0.062	0.072	1.575	1.829
F	0.045	0.055	1.143	1.397
H	0.575	0.625	14.605	15.875
J1	0.080	0.120	2.032	3.048
K	0.045	0.066	1.143	1.676
L1	0.090	0.110	2.286	2.794
θ1	3°	10°	3°	10°
θ2	1°	7°	1°	7°
θ3	0°	8°	0°	8°
θ4	18°	22°	18°	22°
Q	0.055	0.075	1.397	1.905
U	0.256 Ref.		6.502 Ref.	
V	0.305 Ref.		7.747 Ref.	

NOTE:
1. PACKAGE OUTLINE EXCLUSIVE OF MOLD FLASH & METAL BURR.
2. PACKAGE OUTLINE INCLUSIVE OF PLATING THICKNESS.
3. FOOT LENGTH USING GAUGE PLANE METHOD MEASUREMENT 0.010"
4. PACKAGE TOP MARK MAY BE IN TOP CENTER OR LOWER LEFT CORNER
5. ALL DIMENSIONS ARE IN INCHES/MILLIMETERS.

5-Pin TO-263 (WU)

MICREL, INC. 2180 FORTUNE DRIVE SAN JOSE, CA 95131 USA
TEL +1 (408) 944-0800 FAX +1 (408) 474-1000 WEB http://www.micrel.com

The information furnished by Micrel in this data sheet is believed to be accurate and reliable. However, no responsibility is assumed by Micrel for its use. Micrel reserves the right to change circuitry and specifications at any time without notification to the customer.

Micrel Products are not designed or authorized for use as components in life support appliances, devices or systems where malfunction of a product can reasonably be expected to result in personal injury. Life support devices or systems are devices or systems that (a) are intended for surgical implant into the body or (b) support or sustain life, and whose failure to perform can be reasonably expected to result in a significant injury to the user. A Purchaser's use or sale of Micrel Products for use in life support appliances, devices or systems is a Purchaser's own risk and Purchaser agrees to fully indemnify Micrel for any damages resulting from such use or sale.

© 2009 Micrel, Incorporated.

ENTEGRECİ

Bu belge www.entegreci.com üzerinden sunulmaktadır.

Elektronik komponent tedarikinde Entegreci

Entegreci, Eskişehir merkezli, Türkiye geneline satış yapan bir elektronik komponent mağazasıdır. Entegreler (IC), mikrodenetleyiciler, transistörler, diyotlar, pasif elemanlar, konnektörler, modüller ve geliştirme kartları tek adetten seri üretim adetlerine kadar satılır. Ürün sayfalarında güncel stok durumunu, fiyatı ve datasheet bağlantısını bulabilirsiniz.

Parça koduyla arama

Üretici parça numarasını yazın; stok ve fiyatı hemen görün.

www.entegreci.com

Ürün kategorileri

Entegreden kapasitöre tüm elektronik komponent kategorileri.

Kategorilere göz atın

Üreticiler

Aradığınız üreticinin ürünlerini tek sayfada inceleyin.

Üreticileri görün

Toplu alım ve teklif

Listede olmayan ya da yüksek adetli parçalar için teklif isteyin.

Teklif isteyin

www.entegreci.com | **destek@entegreci.com** | **0850 305 90 34**

Entegreci is an online electronic components store based in Türkiye. Search by manufacturer part number to see stock, prices and datasheets for integrated circuits, microcontrollers, transistors, passive components and connectors, or request a quote for parts that are not listed.

Bu sayfa Entegreci tarafından eklenmiştir. Belgenin önceki sayfaları asıl yayıncısına aittir ve içeriği değiştirilmemiştir; en güncel sürüm için belgenin yayıncısına başvurun.