LDO Voltage Regulator - Low Noise, RF

1 A

NCV59800

The NCV59800 is a family of 1 A low-dropout linear regulators (LDOs) offering high power-supply ripple rejection (PSRR) and ultra-low output noise. This series of LDOs uses an advanced BiCMOS process to achieve very good electrical performance. It is an ideal choice for noise sensitive Analog RF Front-Ends used in Telecom Equipment. The NCV59800 is available in the 3 mm x 3 mm DFN8 package.

Features

- Operating Input Voltage Range: 2.2 V to 5.5 V
- Output Voltage Range:
  - 0.8 V to 5 V (adjustable)
- Quiescent Current typ. 60 μA
- Low Dropout: 200 mV typ. at 1 A, V_{OUT} = 2.5 V
- ±2.5% V_{OUT} Accuracy across Load/Line/Temperature
- Stable with Small 4.7 μF Ceramic Capacitors
- Very-Low Noise: Typically 15 μV_{RMS}/V from 100 Hz to 100 kHz
- Over-Current and Thermal Shutdown Protection
- Available in 3 x 3 mm DFN8 Package
- Device Temperature Grade 1: −40 °C to 125 °C Ambient Operating Temperature Range
- NCV Prefix for Automotive and Other Applications Requiring Unique Site and Control Change Requirements; AEC-Q100 Qualified and PPAP Capable
- These Devices are Pb-Free, Halogen Free/BFR Free and are RoHS Compliant

Typical Applications

- Telecom Infrastructure
- Automotive Infotainment Systems
- High-Speed I/F (PLL/VCO)

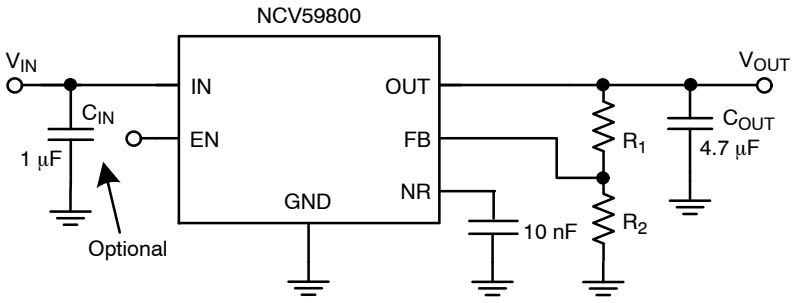

Figure 1. Typical Application Schematics



DFN8
3 x 3 mm
CASE 506DB

MARKING DIAGRAM

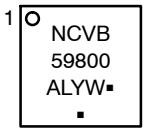

A	= Assembly Location
L	= Wafer Lot
Y	= Year
W	= Work Week
▪	= Pb-Free Package

(Note: Microdot may be in either location)

PIN CONNECTIONS

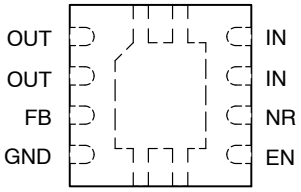

(Top View)

3 mm x 3 mm DFN8 0.65 P

ORDERING INFORMATION

See detailed ordering and shipping information on page 5 of this data sheet.

© Semiconductor Components Industries, LLC, 2016

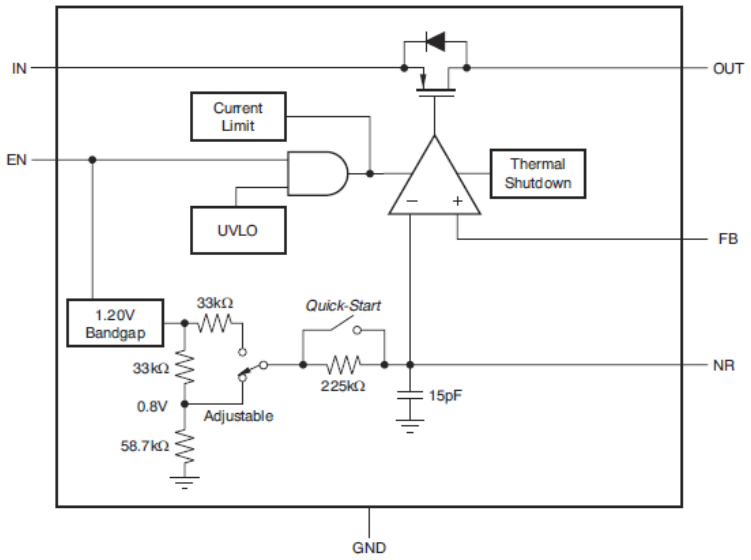

Figure 2. Internal Block Diagram

Table 1. PIN FUNCTION DESCRIPTION

Pin No. DFN8	Pin Name	Description
7,8	IN	Unregulated input supply.
4, EPAD	GND	Ground.
5	EN	Driving the enable pin (EN) high turns on the regulator. Driving this pin low puts the regulator into shutdown mode.
6	NR	Connect an external capacitor between this pin and ground to reduce the output noise to very low levels. The capacitor slows down the V_{OUT} ramp as well (soft-start). Max recommended C_{NR} value is 0.47 μF
3	FB	This pin is the input to the control loop error amplifier and is used to set the output voltage of the device.
1,2	OUT	Regulator output. A 4.7 μF to 100 μF capacitor is required for stability.

Table 2. ABSOLUTE MAXIMUM RATINGS

Rating	Symbol	Value	Unit
Input Voltage (Note 1)	IN	6.0	V
Output Voltage	OUT	−0.3 to (V_{IN} + 0.3) ≤ 6.0	V
Enable Input Voltage	EN	−0.3 to 6.0	V
FB Input Voltage	FB	−0.3 to 6.0	V
Output Current	I_{OUT}	Internally Limited	mA
Maximum Junction Temperature	$T_{J(MAX)}$	150	°C
Operating Ambient Temperature	T_A	−40 to +125	°C
Storage Temperature	T_{STG}	−55 to 150	°C
ESD Capability, Human Body Model (Note 2)	ESD_{HBM}	2000	V
ESD Capability, Machine Model (Note 2)	ESD_{MM}	200	V

Stresses exceeding those listed in the Maximum Ratings table may damage the device. If any of these limits are exceeded, device functionality should not be assumed, damage may occur and reliability may be affected.

1. Refer to ELECTRICAL CHARACTERISTICS and APPLICATION INFORMATION for Safe Operating Area.
2. This device series incorporates ESD protection and is tested by the following methods:
   ESD Human Body Model tested per AEC-Q100-002 (EIA/JESD22-A114)
   ESD Machine Model tested per AEC-Q100-003 (EIA/JESD22-A115)
   Latchup Current Maximum Rating tested per JEDEC standard: JESD78

Share Feedback
Your Opinion Matters

Table 3. RECOMMENDED OPERATING RANGES (Note 3)

Parameter	Symbol	Min	Max	Unit
Input Voltage	V_{IN}	$(V_{OUT} + V_{DO}) \geq 2.2$	5.5	V
Junction Temperature	T_J	−40	+125	°C

3. Functional operation above the stresses listed in the Recommended Operating Ranges is not implied. Extended exposure to stresses beyond the Recommended Operating Ranges limits may affect device reliability.

Table 4. THERMAL CHARACTERISTICS

Rating	Symbol	Value	Unit
Thermal Characteristics, DFN8 3 mm x 3 mm Thermal Resistance, Junction-to-Air (Note 4)	$R_{\theta JA}$	52	°C/W

4. The junction-to-ambient thermal resistance under natural convection is obtained in a simulation on a JEDEC-standard, high-K board, as specified in JESD51-7, in an environment described in JESD51-2a.

Table 5. ELECTRICAL CHARACTERISTICS Over the operating temperature range of T_J = −40 °C to +125 °C, V_{IN} = ($V_{OUT(NOM)}$ + 0.5 V) or 2.2 V (whichever is greater), I_{OUT} = 1 mA, V_{EN} = 2.2 V, C_{OUT} = 4.7 μF, and C_{NR} = 0.01 μF, unless otherwise noted. NCV59800 Adjustable device is tested at V_{OUT} = 0.8 V and V_{OUT} = 5.0 V. Typical values are at T_J = +25 °C.

Parameter	Test Conditions	Symbol	Min	Typ	Max	Unit
Input Voltage Range		V_{IN}	$(V_{OUT}+V_{DO}) \geq 2.2$		5.5	V
Internal Reference		V_{NR}		0.8		V
Output Voltage	Adjustable Option	V_{OUT}	0.8		5.0	V
Output Voltage Accuracy (Note 5)	V_{OUT} + 0.5 V ≤ V_{IN} ≤ 5.5 V, V_{IN} ≥ 2.2 V 1 mA ≤ I_{OUT} ≤ 1 A	V_{OUT}	−2.5	±0.3	+2.5	%
Line Regulation	V_{OUT} + 0.5 V ≤ V_{IN} ≤ 5.5 V, V_{IN} ≥ 2.2 V I_{OUT} = 1 mA	$\Delta V_{OUT}/\Delta V_{IN}$		150		μV/V
Load Regulation	1 mA ≤ I_{OUT} ≤ 1 A	$\Delta V_{OUT}/\Delta I_{OUT}$		2.0		μV/mA
Dropout Voltage	V_{OUT} + 0.5 V ≤ V_{IN} ≤ 5.5 V, V_{IN} ≥ 2.2 V I_{OUT} = 500 mA, V_{FB} = GND	V_{DO}			250	mV
	V_{OUT} + 0.5 V ≤ V_{IN} ≤ 5.5 V, V_{IN} ≥ 2.5 V I_{OUT} = 750 mA, V_{FB} = GND				350	mV
	V_{OUT} + 0.5 V ≤ V_{IN} ≤ 5.5 V, V_{IN} ≥ 2.5 V I_{OUT} = 1 A, V_{FB} = GND				500	mV
Output Current Limit	V_{OUT} = 0.85 $V_{OUT(NOM)}$, V_{IN} ≥ 3.3 V	I_{CL}		1.6		A
Ground Pin Current	I_{OUT} = 0.1 mA	I_{GND}		60	100	μA
	I_{OUT} = 1 A				500	μA
Shutdown Current (I_{GND})	V_{EN} ≤ 0.4 V, V_{IN} ≥ 2.2 V, R_L = 1 kΩ, 0 °C ≤ T_J ≤ 85°C	I_{SHDN}		0.2	2.0	μA
Feedback Pin Current	V_{IN} = 5.5 V, V_{FB} = 0.8 V			0.02	1.0	μA
Power Supply Rejection Ratio	I_{OUT} = 750 mA, V_{OUT} = 3.3 V, V_{IN} = 4.3 V; f = 100 Hz	PSRR		77		dB
	f = 1 kHz			63		
	f = 1 MHz			27		
Output Noise Voltage	BW = 100 Hz–100 kHz, I_{OUT} = 100 mA, C_{NR} = 100 nF, V_{IN} = 4.3 V, V_{OUT} = 3.3 V	V_N		15 x V_{OUT}		μV_{RMS}
Enable Input Current	V_{IN} = V_{EN} = 5.5 V	I_{EN}		0.02	1.0	μA
Soft-Start Charging Current	V_{NR} = 0.5 V	I_{SS}		7.2		μA
EN Pin Threshold Voltage	EN Input Voltage “H”	V_{ENH}	1.2			V
	EN Input Voltage “L”	V_{ENL}			0.4	

Product parametric performance is indicated in the Electrical Characteristics for the listed test conditions, unless otherwise noted. Product performance may not be indicated by the Electrical Characteristics if operated under different conditions.

5. As for NCV59800 (adjustable); it does not include external resistor tolerances and it is not tested at this condition:
V_{OUT} = 0.8 V, 4.5 V ≤ V_{IN} ≤ 5.5 V, and 750 mA ≤ I_{OUT} ≤ 1 A because of power dissipation higher than maximum rating of the package.

Share Feedback
Your Opinion Matters

Table 5. ELECTRICAL CHARACTERISTICS Over the operating temperature range of T_J = –40 °C to +125 °C, V_{IN} = ($V_{OUT(NOM)}$ + 0.5 V) or 2.2 V (whichever is greater), I_{OUT} = 1 mA, V_{EN} = 2.2 V, C_{OUT} = 4.7 μF, and C_{NR} = 0.01 μF, unless otherwise noted. NCV59800 Adjustable device is tested at V_{OUT} = 0.8 V and V_{OUT} = 5.0 V. Typical values are at T_J = +25 °C.

Parameter	Test Conditions		Symbol	Min	Typ	Max	Unit
Start-Up Time	$V_{OUT(NOM)}$ = 3.3 V V_{OUT} = 0% to 90% $V_{OUT(NOM)}$ R_L = 3.3kΩ, C_{OUT}=4.7 μF	C_{NR} = 10 nF	t_{STR}		1.0		ms
		C_{NR} = 100 nF			10		ms
Undervoltage Lockout	V_{IN} rising, R_L = 1 kΩ		UVLO	1.86	2.0	2.1	V
UVLO Hysteresis	V_{IN} falling, R_L = 1 kΩ				75		mV
Thermal Shutdown	Shutdown, temperature increasing		T_{SD_TEMP}		160		°C
Thermal Shutdown Recovery	Reset, temperature decreasing		T_{SD_HYST}		140		
T_J Operating Range				–40		+125	°C

Product parametric performance is indicated in the Electrical Characteristics for the listed test conditions, unless otherwise noted. Product performance may not be indicated by the Electrical Characteristics if operated under different conditions.

5. As for NCV59800 (adjustable); it does not include external resistor tolerances and it is not tested at this condition: V_{OUT} = 0.8 V, 4.5 V ≤ V_{IN} ≤ 5.5 V, and 750 mA ≤ I_{OUT} ≤ 1 A because of power dissipation higher than maximum rating of the package.

APPLICATIONS INFORMATION

General Information

The NCV59800 regulator is equipped with Noise Reduction pin (NR) for noise sensitive applications. A noise reduction capacitor (C_{NR}) at the NR pin bypasses noise generated by the bandgap reference. This family of regulators offers sub-bandgap output voltages, current limit, and thermal protection, and is fully specified from –40 °C to +125 °C. assuming resistors with zero error. For the actual design, pay attention to any resistor error factors. Figure 3 gives the Typical Application Schematics.

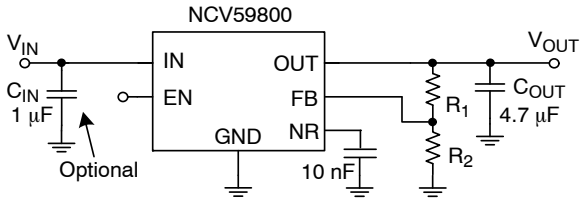

Figure 3. Typical Application Schematics

Output Voltage Setting

The output voltage can be adjusted from 0.8 V to 5.0 V using resistors divider between the output and the FB input. The values of R1 and R2 can be calculated for any voltage using the following formula:

$$V_{OUT} = 0.8\ V \left(1 + \frac{R_1}{R_2}\right)$$

Recommended resistor values for frequently used voltages can be found in the Table 6.

Capacitors Selection

Although an input capacitor is not required for stability, it is good analog design practice to connect a 0.1 μF to 1.0 μF low equivalent series resistance (ESR) capacitor across the input supply near the regulator. The NCV59800 is designed to be stable with standard ceramic output capacitors of capacitance values 4.7 μF up to 100 μF. This device is evaluated using a 4.7 μF/10 V, 10% tolerance, X5R type Ceramic Capacitors of 0805 size.

X5R– and X7R–type capacitors are highly recommended because they have minimal variation in value and ESR over temperature.

Startup Response

The C_{NR} serves not only for noise reduction. During Start-Up the C_{NR} capacitor works like the Soft Start timing capacitor. The controlled monotonic ramping of Voltage Reference (adjustable Soft-Start) is limiting the Inrush Current .

Table 6. RECOMMENDED 1% FEEDBACK RESISTOR VALUES FOR FREQUENTLY USED NOMINAL OUTPUT VOLTAGES

V_{OUT}	R_1	R_2
0.8 V	0 Ω (Short)	10.0 kΩ
1.0 V	2.49 kΩ	10.0 kΩ
1.2 V	4.99 kΩ	10.0 kΩ
1.5 V	8.87 kΩ	10.0 kΩ
1.8 V	12.5 kΩ	10.0 kΩ
2.5 V	21.0 kΩ	10.0 kΩ
3.3 V	30.9 kΩ	10.0 kΩ
5.0 V	52.3 kΩ	10.0 kΩ

Power Dissipation

The maximum power dissipation supported by the device is dependent upon board design and layout. Mounting pad configuration on the PCB, the board material, and the ambient temperature affect the rate of junction temperature rise for the part. For reliable operation junction temperature should be limited to +125 °C.

Share Feedback
Your Opinion Matters

Table 7. ORDERING INFORMATION

Device	Output Voltage	Marking	Package	Shipping†
NCV59800BMNADJTBG	ADJ	NCVB 59800	DFN8 3x3 (Non-Wettable Flank) (Pb-Free)	3000/ Tape & Reel
NCV59800BMWADJTBG	ADJ	NCVBW 59800	DFN8 3x3 (Wettable Flank) (Pb-Free)	3000 / Tape & Reel

† For information on tape and reel specifications, including part orientation and tape sizes, please refer to our Tape and Reel Packaging Specifications Brochure, BRD8011/D.

* To order other package and voltage variants, please contact your **onsemi** sales representative.

Share Feedback
Your Opinion Matters

REVISION HISTORY

Revision	Description of Changes	Date
0	Initial production document version release.	10/10/2016
1	Document rebranded to **onsemi** format.	1/12/2026

Share Feedback
Your Opinion Matters



DFN8, 3x3, 0.65P
CASE 506DB
ISSUE A

DATE 12 OCT 2016

SCALE 2:1

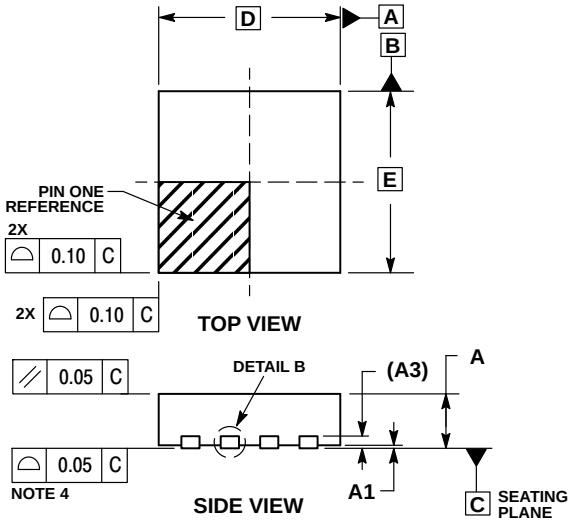

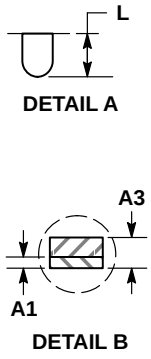

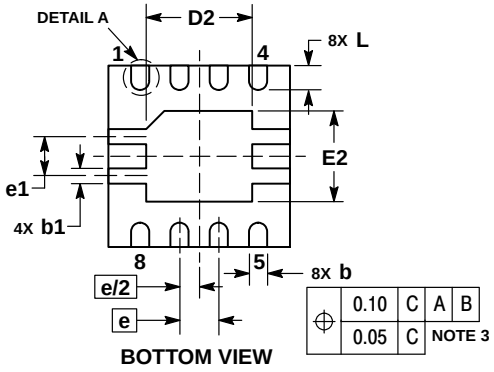

NOTES:
1. DIMENSIONING AND TOLERANCING PER ASME Y14.5M, 1994.
2. CONTROLLING DIMENSION: MILLIMETERS.
3. DIMENSION b APPLIES TO PLATED TERMINAL AND IS MEASURED BETWEEN 0.15 AND 0.30mm FROM THE TERMINAL TIP.
4. COPLANARITY APPLIES TO THE EXPOSED PAD AS WELL AS THE TERMINALS.

DIM	MILLIMETERS MIN	MAX
A	0.80	1.00
A1	0.00	0.05
A3	0.20 REF	
b	0.25	0.35
b1	0.20	0.30
D	3.00 BSC	
D2	1.65	1.85
E	3.00 BSC	
E2	1.40	1.60
e	0.65 BSC	
e1	0.65 REF	
L	0.30	0.50
L1	0.00	0.15

GENERIC MARKING DIAGRAM*

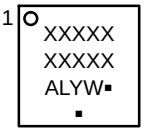

XXXXX = Specific Device Code
A = Assembly Location
L = Wafer Lot
Y = Year
W = Work Week
▪ = Pb−Free Package

(Note: Microdot may be in either location)

*This information is generic. Please refer to device data sheet for actual part marking.
Pb−Free indicator, “G” or microdot “ ▪”, may or may not be present.

RECOMMENDED SOLDERING FOOTPRINT*

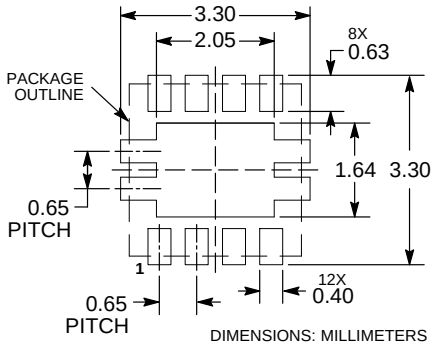

DIMENSIONS: MILLIMETERS

*For additional information on our Pb−Free strategy and soldering details, please download the **onsemi** Soldering and Mounting Techniques Reference Manual, SOLDERRM/D.

DOCUMENT NUMBER:	**98AON92252F**	Electronic versions are uncontrolled except when accessed directly from the Document Repository. Printed versions are uncontrolled except when stamped “CONTROLLED COPY” in red.	
DESCRIPTION:	**DFN8, 3X3, 0.65P**		**PAGE 1 OF 1**

onsemi and onsemi are trademarks of Semiconductor Components Industries, LLC dba **onsemi** or its subsidiaries in the United States and/or other countries. **onsemi** reserves the right to make changes without further notice to any products herein. **onsemi** makes no warranty, representation or guarantee regarding the suitability of its products for any particular purpose, nor does **onsemi** assume any liability arising out of the application or use of any product or circuit, and specifically disclaims any and all liability, including without limitation special, consequential or incidental damages. **onsemi** does not convey any license under its patent rights nor the rights of others.

onsemi, , and other names, marks, and brands are registered and/or common law trademarks of Semiconductor Components Industries, LLC dba "**onsemi**" or its affiliates and/or subsidiaries in the United States and/or other countries. **onsemi** owns the rights to a number of patents, trademarks, copyrights, trade secrets, and other intellectual property. A listing of **onsemi**'s product/patent coverage may be accessed at www.onsemi.com/site/pdf/Patent−Marking.pdf. **onsemi** reserves the right to make changes at any time to any products or information herein, without notice. The information herein is provided "as−is" and **onsemi** makes no warranty, representation or guarantee regarding the accuracy of the information, product features, availability, functionality, or suitability of its products for any particular purpose, nor does **onsemi** assume any liability arising out of the application or use of any product or circuit, and specifically disclaims any and all liability, including without limitation special, consequential or incidental damages. Buyer is responsible for its products and applications using **onsemi** products, including compliance with all laws, regulations and safety requirements or standards, regardless of any support or applications information provided by **onsemi**. "Typical" parameters which may be provided in **onsemi** data sheets and/or specifications can and do vary in different applications and actual performance may vary over time. All operating parameters, including "Typicals" must be validated for each customer application by customer's technical experts. **onsemi** does not convey any license under any of its intellectual property rights nor the rights of others. **onsemi** products are not designed, intended, or authorized for use as a critical component in life support systems or any FDA Class 3 medical devices or medical devices with a same or similar classification in a foreign jurisdiction or any devices intended for implantation in the human body. Should Buyer purchase or use **onsemi** products for any such unintended or unauthorized application, Buyer shall indemnify and hold **onsemi** and its officers, employees, subsidiaries, affiliates, and distributors harmless against all claims, costs, damages, and expenses, and reasonable attorney fees arising out of, directly or indirectly, any claim of personal injury or death associated with such unintended or unauthorized use, even if such claim alleges that **onsemi** was negligent regarding the design or manufacture of the part. **onsemi** is an Equal Opportunity/Affirmative Action Employer. This literature is subject to all applicable copyright laws and is not for resale in any manner.

ADDITIONAL INFORMATION

TECHNICAL PUBLICATIONS:
Technical Library: www.onsemi.com/design/resources/technical−documentation
onsemi Website: www.onsemi.com

ONLINE SUPPORT: www.onsemi.com/support
For additional information, please contact your local Sales Representative at www.onsemi.com/support/sales

ENTEGRECİ

Bu belge www.entegreci.com üzerinden sunulmaktadır.

Elektronik komponent tedarikinde Entegreci

Entegreci, Eskişehir merkezli, Türkiye geneline satış yapan bir elektronik komponent mağazasıdır. Entegreler (IC), mikrodenetleyiciler, transistörler, diyotlar, pasif elemanlar, konnektörler, modüller ve geliştirme kartları tek adetten seri üretim adetlerine kadar satılır. Ürün sayfalarında güncel stok durumunu, fiyatı ve datasheet bağlantısını bulabilirsiniz.

Parça koduyla arama

Üretici parça numarasını yazın; stok ve fiyatı hemen görün.

www.entegreci.com

Ürün kategorileri

Entegreden kapasitöre tüm elektronik komponent kategorileri.

Kategorilere göz atın

Üreticiler

Aradığınız üreticinin ürünlerini tek sayfada inceleyin.

Üreticileri görün

Toplu alım ve teklif

Listede olmayan ya da yüksek adetli parçalar için teklif isteyin.

Teklif isteyin

www.entegreci.com | **destek@entegreci.com** | **0850 305 90 34**

Entegreci is an online electronic components store based in Türkiye. Search by manufacturer part number to see stock, prices and datasheets for integrated circuits, microcontrollers, transistors, passive components and connectors, or request a quote for parts that are not listed.

Bu sayfa Entegreci tarafından eklenmiştir. Belgenin önceki sayfaları asıl yayıncısına aittir ve içeriği değiştirilmemiştir; en güncel sürüm için belgenin yayıncısına başvurun.