# LOW NOISE 150mA LDO REGULATOR

NO.EA-058-111026

## OUTLINE

The R1121N Series are CMOS-based voltage regulator ICs with high output voltage accuracy, extremely low supply current, low ON-resistance, and high Ripple Rejection. Each of these voltage regulator ICs consists of a voltage reference unit, an error amplifier, resistors, a current limit circuit, and a chip enable circuit.

These ICs perform with low dropout voltage and a chip enable function. The line transient response and load transient response of the R1121N Series are excellent, thus these ICs are very suitable for the power supply for hand-held communication equipment.

The output voltage of these ICs is fixed with high accuracy.

Since the package for these ICs is SOT-23-5 (Mini-mold) package , high density mounting of the ICs on boards is possible.

## FEATURES

- Supply Current ..... Typ. 35μA
- Standby Mode ..... Typ. 0.1μA
- Dropout Voltage ..... Typ. 0.2V ($I_{OUT}$=100mA)
- Ripple Rejection ..... Typ. 70dB(f=1kHz)
- Temperature-Drift Coefficient of Output Voltage ..... Typ. ±100ppm/°C
- Line Regulation ..... Typ. 0.05%/V
- Output Voltage Accuracy ..... ±2.0%
- Output Voltage Range ..... 1.5V to 5.0V (0.1V steps)
  (For other voltages, please refer to MARK INFORMATIONS.)
- Package ..... SOT-23-5 (Mini-mold)
- Built-in chip enable circuit ( 2 types; A: active “L”, B: active “H”)
- Pin-out ..... Similar to the TK112,TK111

## APPLICATIONS

- Power source for cellular phones such as GSM, CDMA and various kinds of PCSs.
- Power source for domestic appliances such as cameras, VCRs and camcorders.
- Power source for battery-powered equipment.

## BLOCK DIAGRAM

R1121Nxx1A

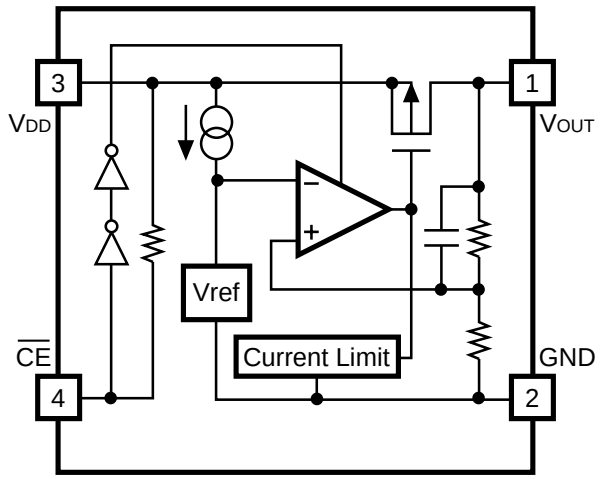


R1121Nxx1B

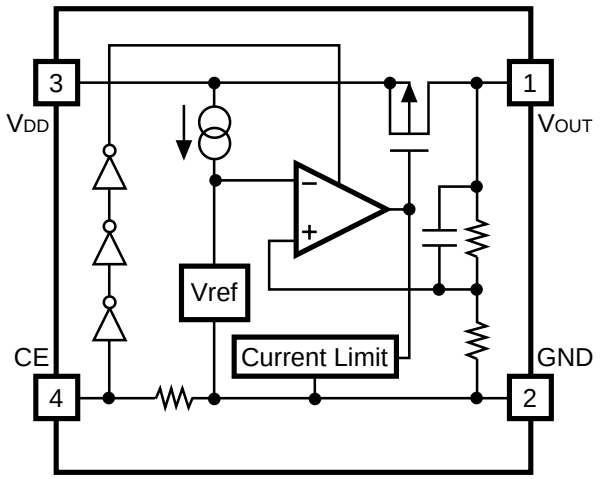


## SELECTION GUIDE

The output voltage, the active type for the ICs can be selected at the user's request.

| Product Name | Package | Quantity per Reel | Pb Free | Halogen Free |
|---|---|---|---|---|
| R1121Nxx1∗-TR-FE | SOT-23-5 | 3,000 pcs | Yes | Yes |

xx: The output voltage can be designated in the range from 1.5V(15) to 5.0V(50) in 0.1V steps.
(For other voltages, please refer to MARK INFORMATIONS.)

∗ : Designation of Active Type.
(A) "L" active
(B) "H" active

## PIN CONFIGURATION

**SOT-23-5**

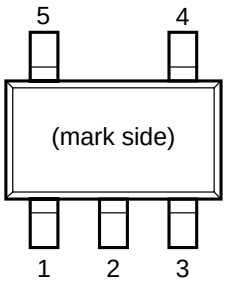


## PIN DESCRIPTION

| Pin No | Symbol | Description |
|---|---|---|
| 1 | $V_{OUT}$ | Output pin |
| 2 | GND | Ground Pin |
| 3 | $V_{DD}$ | Input Pin |
| 4 | $\overline{CE}$ or CE | Chip Enable Pin |
| 5 | NC | No Connection |

## ABSOLUTE MAXIMUM RATINGS

| Symbol | Item | Rating | Unit |
|---|---|---|---|
| $V_{IN}$ | Input Voltage | 9.0 | V |
| $V_{CE}$ | Input Voltage( $\overline{CE}$ or CE Pin) | -0.3 ~ $V_{IN}$+0.3 | V |
| $V_{OUT}$ | Output Voltage | -0.3 ~ $V_{IN}$+0.3 | V |
| $I_{OUT}$ | Output Current | 200 | mA |
| $P_D$ | Power Dissipation (SOT-23-5) * | 420 | mW |
| Topt | Operating Temperature Range | -40 ~ 85 | °C |
| Tstg | Storage Temperature Range | -55 ~ 125 | °C |

∗) For Power Dissipation, please refer to PACKAGE INFORMATION.

**ABSOLUTE MAXIMUM RATINGS**

Electronic and mechanical stress momentarily exceeded absolute maximum ratings may cause the permanent damages and may degrade the life time and safety for both device and system using the device in the field.
The functional operation at or over these absolute maximum ratings is not assured.

# ELECTRICAL CHARACTERISTICS

- **R1121Nxx1A**

Topt=25°C

| Symbol | Item | Conditions | Min. | Typ. | Max. | Unit |
|---|---|---|---|---|---|---|
| $V_{OUT}$ | Output Voltage | $V_{IN}$ = Set $V_{OUT}$ + 1V<br>1mA ≦ $I_{OUT}$ ≦ 30mA | $V_{OUT}$<br>×0.98 | | $V_{OUT}$<br>×1.02 | V |
| $I_{OUT}$ | Output Current | Refer to the ELECTRICAL CHARACTERISTICS by OUTPUT VOLTAGE | | | | |
| $\Delta V_{OUT}/\Delta I_{OUT}$ | Load Regulation | $V_{IN}$ = Set $V_{OUT}$ + 1V<br>1mA ≦ $I_{OUT}$ ≦ 80mA | | 12 | 40 | mV |
| $V_{DIF}$ | Dropout Voltage | Refer to the ELECTRICAL CHARACTERISTICS by OUTPUT VOLTAGE | | | | |
| $I_{SS}$ | Supply Current | $V_{IN}$ = Set $V_{OUT}$ + 1V | | 35 | 70 | μA |
| Istandby | Supply Current (Standby) | $V_{IN}$ = $V_{CE}$ = Set $V_{OUT}$ + 1V | | 0.1 | 1.0 | μA |
| $\Delta V_{OUT}/\Delta V_{IN}$ | Line Regulation | Set $V_{OUT}$+0.5V ≦ $V_{IN}$ ≦ 8.0V<br>$I_{OUT}$ = 30mA | | 0.05 | 0.20 | %/V |
| RR | Ripple Rejection | f = 1kHz, Ripple 0.5Vp-p<br>$V_{IN}$ = Set $V_{OUT}$ + 1V | | 70 | | dB |
| $V_{IN}$ | Input Voltage | | 2.0 | | 8.0 | V |
| $\Delta V_{OUT}$/<br>$\Delta$Topt | Output Voltage<br>Temperature Coefficient | $I_{OUT}$ = 30mA<br>−40°C ≦ Topt ≦ 85°C | | ±100 | | ppm/°C |
| $I_{SC}$ | Short Current Limit | $V_{OUT}$ = 0V | | 50 | | mA |
| $R_{PU}$ | $\overline{CE}$ Pull-up Resistance | | 2.5 | 5.0 | 10.0 | MΩ |
| $V_{CEH}$ | $\overline{CE}$ Input Voltage “H” | | 1.5 | | $V_{IN}$ | V |
| $V_{CEL}$ | $\overline{CE}$ Input Voltage “L” | | 0.00 | | 0.25 | V |
| en | Output Noise | BW=10Hz to 100kHz | | 30 | | μVrms |

**RECOMMENDED OPERATING CONDITIONS (ELECTRICAL CHARACTERISTICS)**

All of electronic equipment should be designed that the mounted semiconductor devices operate within the recommended operating conditions. The semiconductor devices cannot operate normally over the recommended operating conditions, even if when they are used over such conditions by momentary electronic noise or surge. And the semiconductor devices may receive serious damage when they continue to operate over the recommended operating conditions.

- **R1121Nxx1B**

Topt=25°C

| Symbol | Item | Conditions | Min. | Typ. | Max. | Unit |
|---|---|---|---|---|---|---|
| $V_{OUT}$ | Output Voltage | $V_{IN}$ = Set $V_{OUT}$ + 1V<br>1mA ≦ $I_{OUT}$ ≦ 30mA | $V_{OUT}$<br>×0.98 | | $V_{OUT}$<br>×1.02 | V |
| $I_{OUT}$ | Output Current | Refer to the ELECTRICAL CHARACTERISTICS by OUTPUT VOLTAGE | | | | |
| $\Delta V_{OUT}/\Delta I_{OUT}$ | Load Regulation | $V_{IN}$ = Set $V_{OUT}$ + 1V<br>1mA ≦ $I_{OUT}$ ≦ 80mA | | 12 | 40 | mV |
| $V_{DIF}$ | Dropout Voltage | Refer to the ELECTRICAL CHARACTERISTICS by OUTPUT VOLTAGE | | | | |
| $I_{SS}$ | Supply Current | $V_{IN}$ = Set $V_{OUT}$ + 1V | | 35 | 70 | μA |
| Istandby | Supply Current (Standby) | $V_{IN}$ = Set $V_{OUT}$ + 1V<br>$V_{CE}$ =GND | | 0.1 | 1.0 | μA |
| $\Delta V_{OUT}/\Delta V_{IN}$ | Line Regulation | Set $V_{OUT}$ + 0.5V ≦ $V_{IN}$ ≦ 8.0V<br>$I_{OUT}$ = 30mA | | 0.05 | 0.20 | %/V |
| RR | Ripple Rejection | f = 1kHz, Ripple 0.5Vp-p<br>$V_{IN}$ = Set $V_{OUT}$ + 1V | | 70 | | dB |
| $V_{IN}$ | Input Voltage | | 2.0 | | 8.0 | V |
| $\Delta V_{OUT}/\Delta Topt$ | Output Voltage Temperature Coefficient | $I_{OUT}$ = 30mA<br>−40°C ≦ Topt ≦ 85°C | | ±100 | | ppm/°C |
| $I_{SC}$ | Short Current Limit | $V_{OUT}$ = 0V | | 50 | | mA |
| $R_{PD}$ | CE Pull-down Resistance | | 2.5 | 5.0 | 10.0 | MΩ |
| $V_{CEH}$ | CE Input Voltage “H” | | 1.5 | | $V_{IN}$ | V |
| $V_{CEL}$ | CE Input Voltage “L” | | 0.00 | | 0.25 | V |
| en | Output Noise | BW=10Hz to 100kHz | | 30 | | μVrms |

**RECOMMENDED OPERATING CONDITIONS (ELECTRICAL CHARACTERISTICS)**

All of electronic equipment should be designed that the mounted semiconductor devices operate within the recommended operating conditions. The semiconductor devices cannot operate normally over the recommended operating conditions, even if when they are used over such conditions by momentary electronic noise or surge. And the semiconductor devices may receive serious damage when they continue to operate over the recommended operating conditions.

# ELECTRICAL CHARACTERISTICS by OUTPUT VOLTAGE

Topt = 25°C

| Output Voltage $V_{OUT}$ (V) | Output Current $I_{OUT}$ (mA) | |
|---|---|---|
| | Condition | Min. |
| 1.5 ≦ $V_{OUT}$ ≦ 1.7 | $V_{IN}$ - $V_{OUT}$ = 1.0V | 100 |
| 1.8 ≦ $V_{OUT}$ ≦ 5.0 | | 150 |

Topt = 25°C

| Output Voltage $V_{OUT}$ (V) | Dropout Voltage $V_{DIF}$ (V) | | | |
|---|---|---|---|---|
| | Condition | Min. | Typ. | Max. |
| 1.5 | $I_{OUT}$ = 100mA | 0.50 | | |
| 1.6 | | 0.40 | | |
| 1.7 | | 0.30 | | |
| 1.8 ≦ $V_{OUT}$ ≦ 1.9 | | | 0.60 | 1.40 |
| 2.0 ≦ $V_{OUT}$ ≦ 2.4 | | | 0.35 | 0.70 |
| 2.5 ≦ $V_{OUT}$ ≦ 2.7 | | | 0.24 | 0.35 |
| 2.8 ≦ $V_{OUT}$ ≦ 3.3 | | | 0.20 | 0.30 |
| 3.4 ≦ $V_{OUT}$ ≦ 5.0 | | | 0.17 | 0.26 |

Note : When set Output Voltage is equal or less than 2.0V,
$V_{IN}$ should be equal or more than 2.0V.

# OPERATION

**R1121Nxx1A**

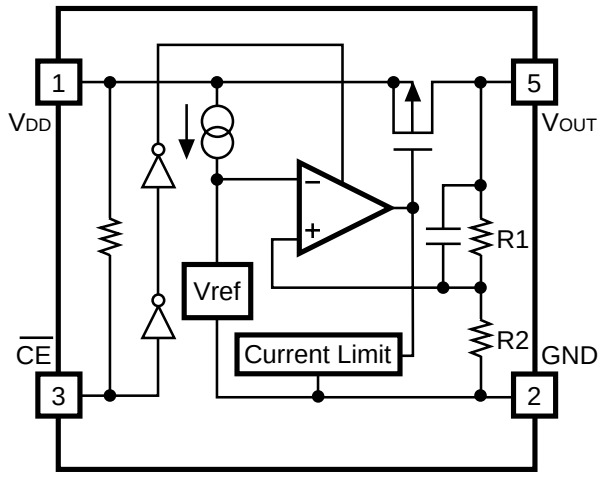


**R1121Nxx1B**

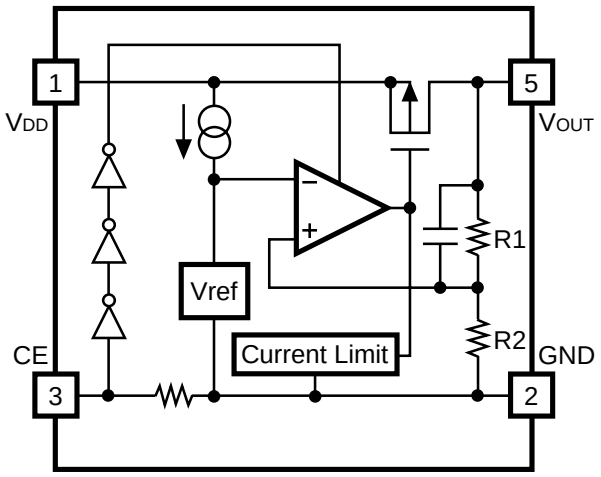


In these ICs, fluctuation of output voltage, $V_{OUT}$ is detected by feed-back registers R1, R2, and the result is compared with a reference voltage by the error amplifier, so that a constant voltage is output.

A current limit circuit for protection in short mode and a chip enable circuit, are included.

## TEST CIRCUITS

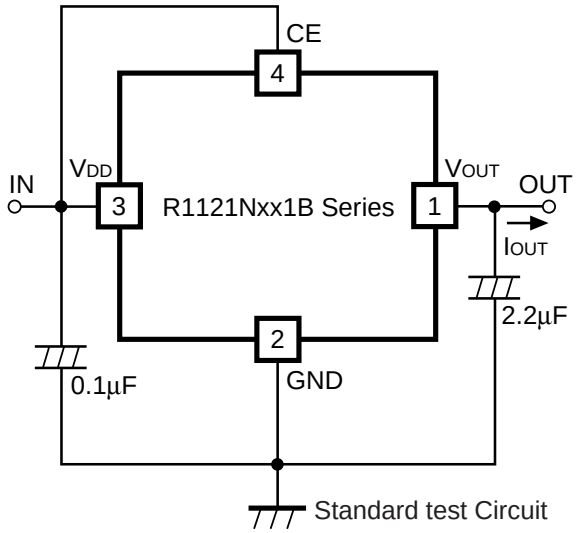


**Fig.1 Standard test Circuit**

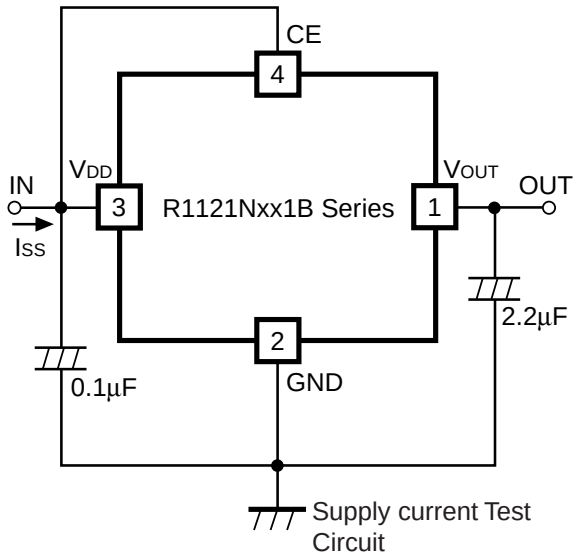


**Fig.2 Supply Current Test Circuit**

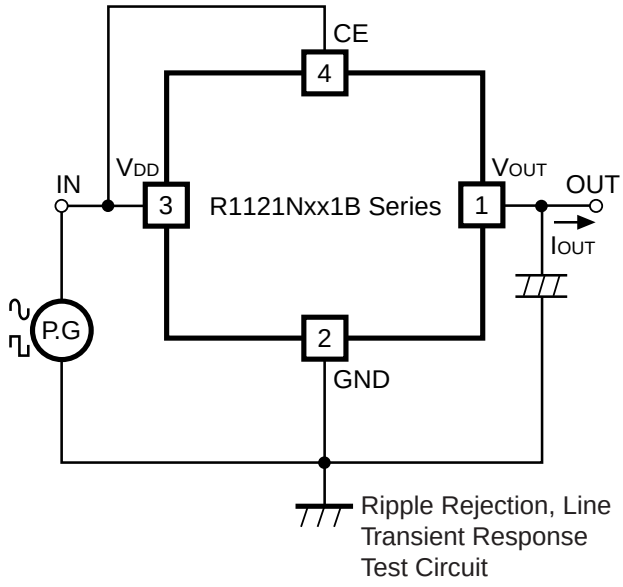


**Fig.3 Ripple Rejection, Line Transient Response Test Circuit**

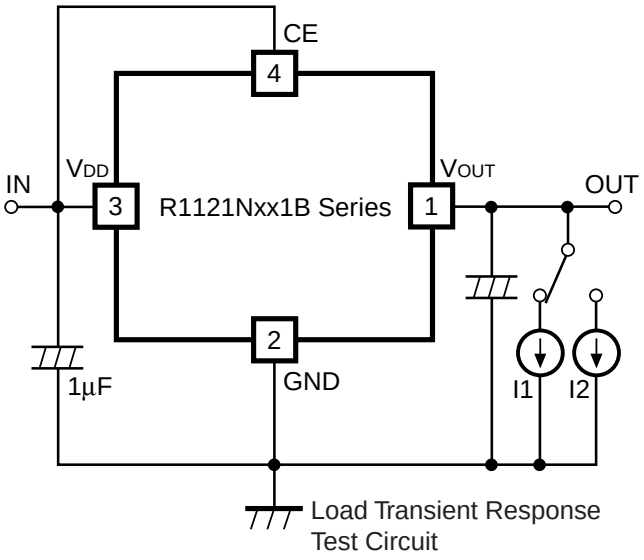


**Fig.4 Load Transient Response Test Circuit**

# TYPICAL CHARACTERISTICS

## 1) Output Voltage vs. Output Current

### R1121N181B

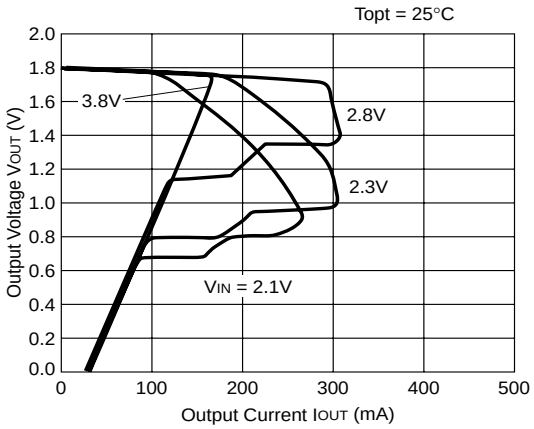


### R1121N301B

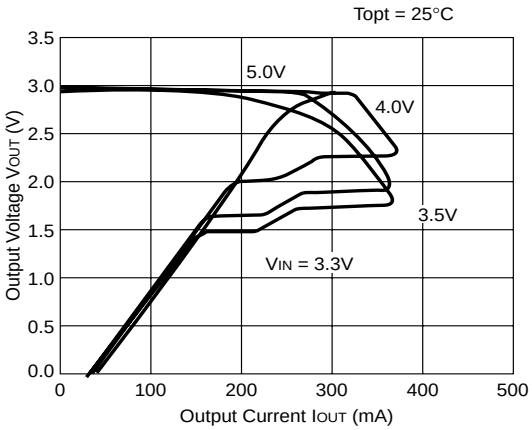


### R1121N401B

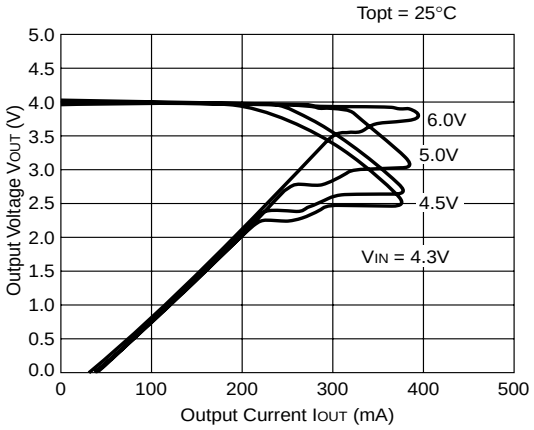


### R1121N501B

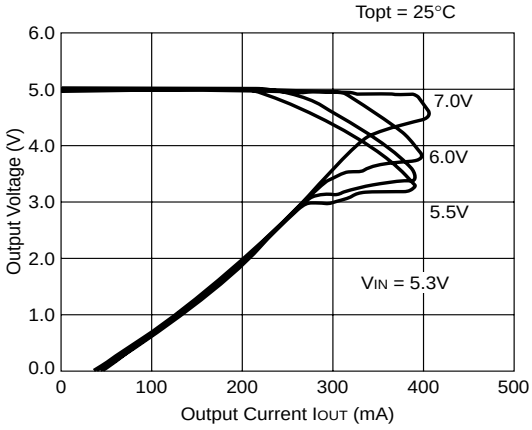


## 2) Output Voltage vs. Input Voltage

### R1121N181B

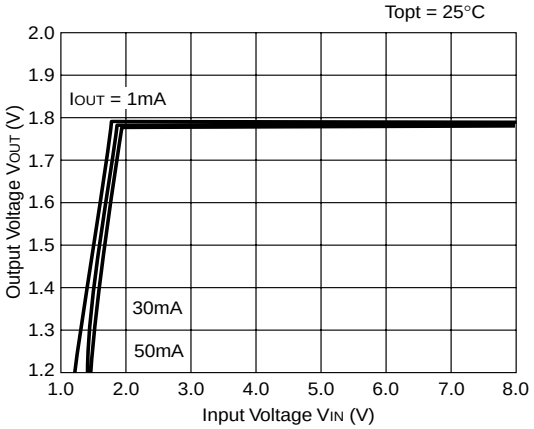


### R1121N301B

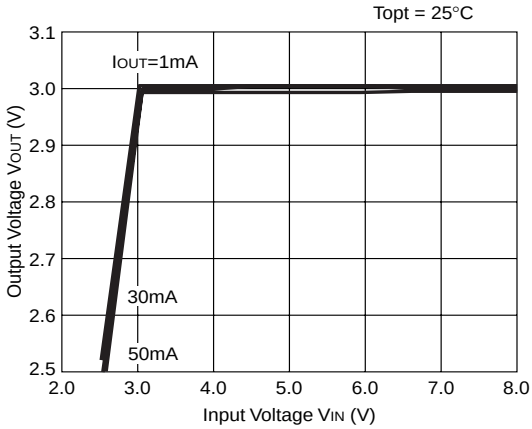

**R1121N401B**

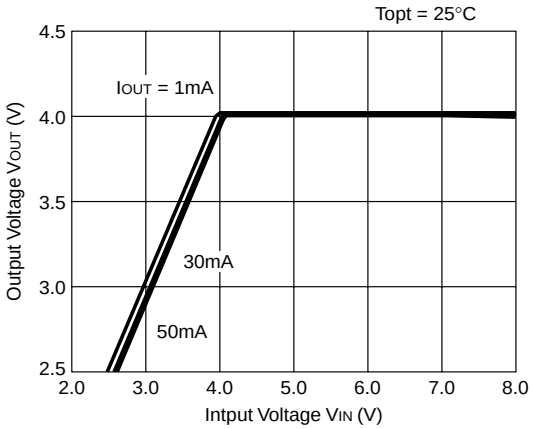


**R1121N501B**

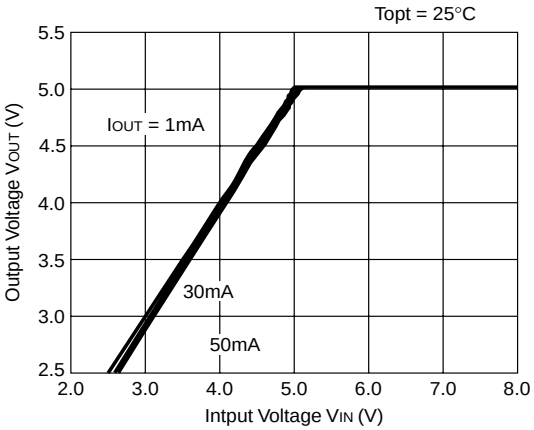


## 3) Dropout Voltage vs. Output Current

**R1121N181B**

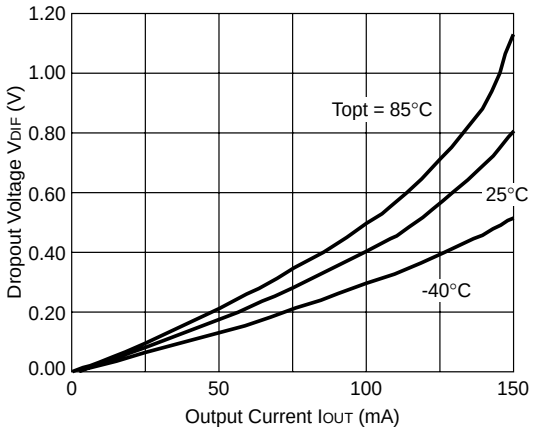


**R1121N301B**

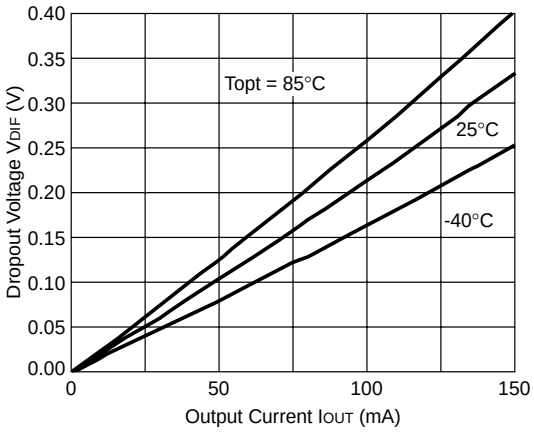


**R1121N401B**

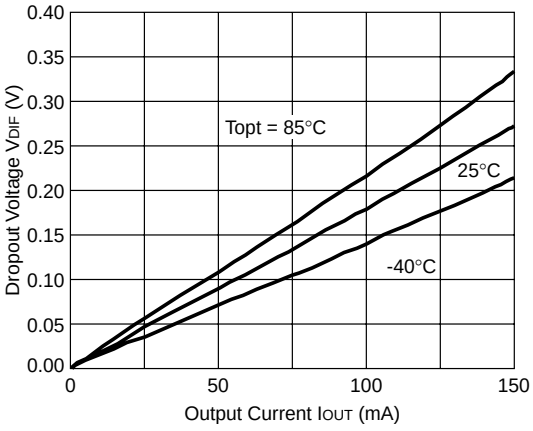


**R1121N501B**

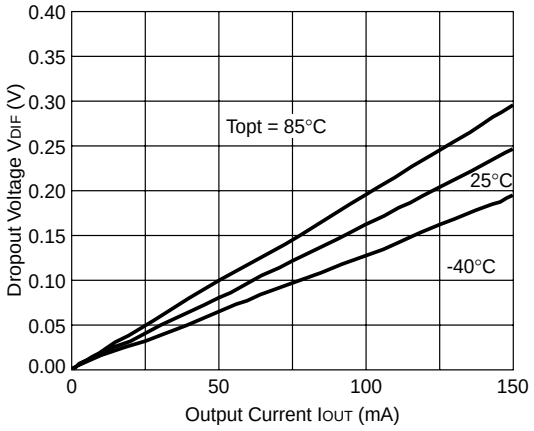

## 4) Output Voltage vs. Temperature

### R1121N181B

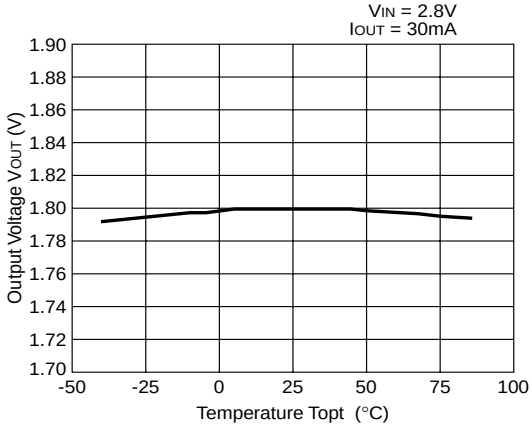


### R1121N301B

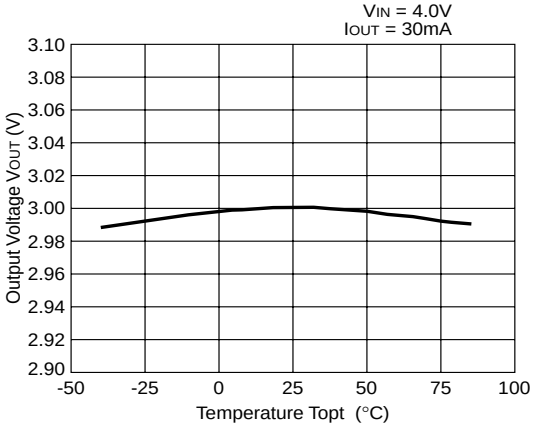


### R1121N401B

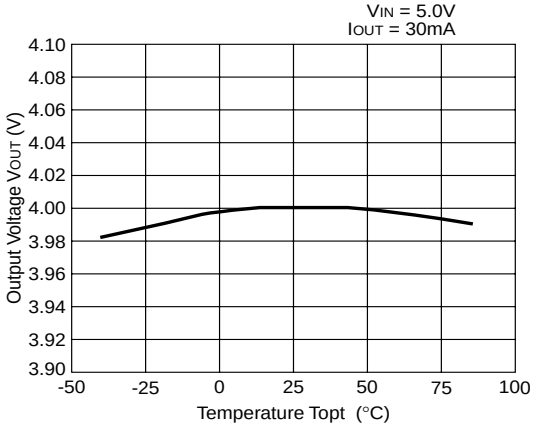


### R1121N501B

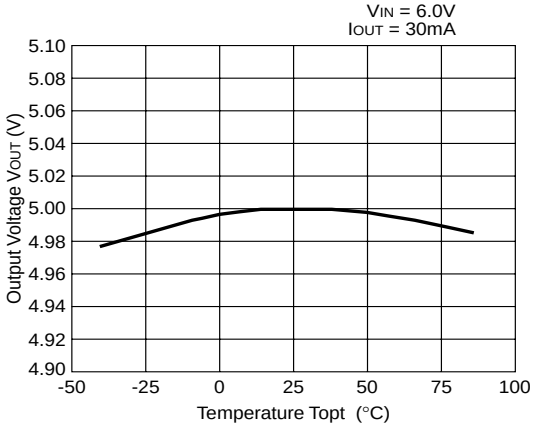


## 5) Supply Current vs. Input Voltage

### R1121N181B

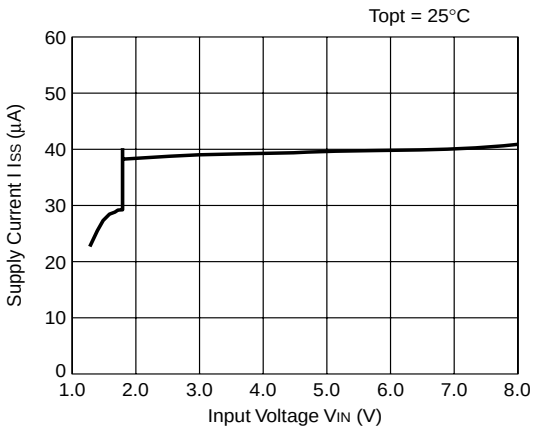


### R1121N301B

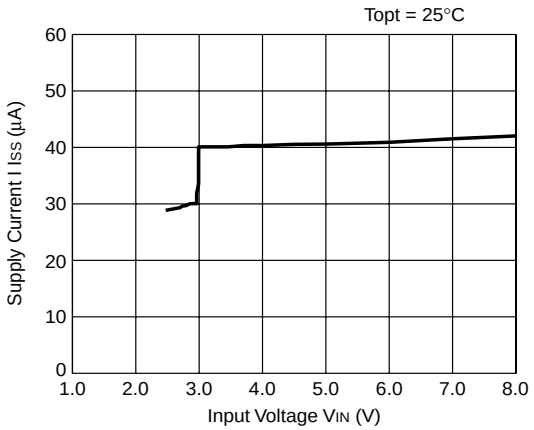

**R1121N401B**

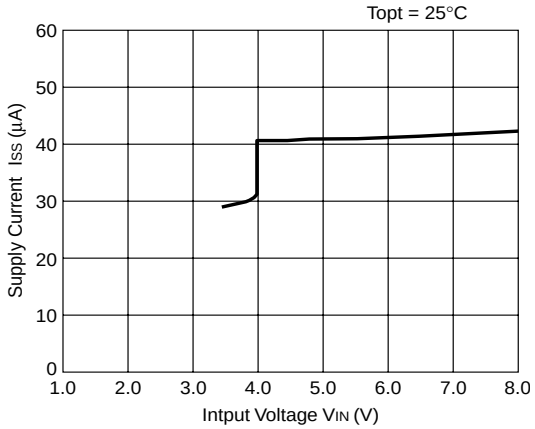


**R1121N501B**

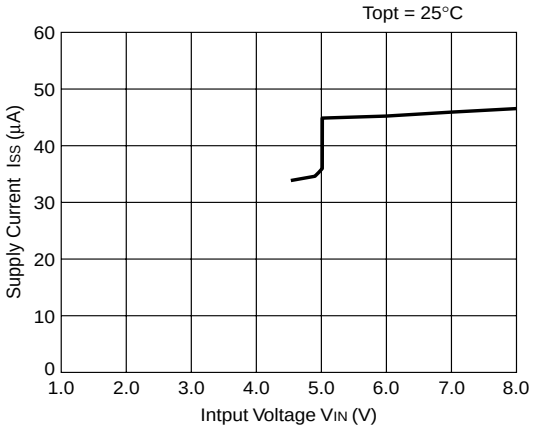


## 6) Supply Current vs. Temperature

**R1121N181B**

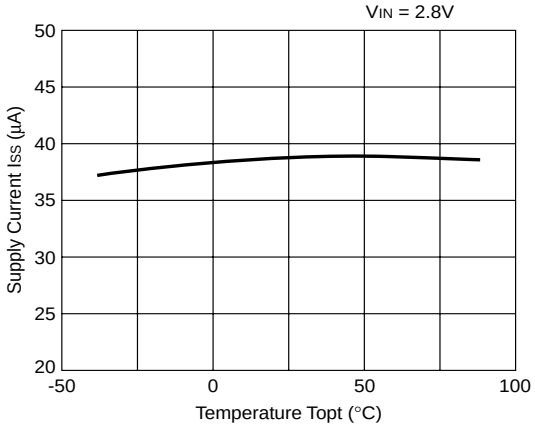


**R1121N301B**

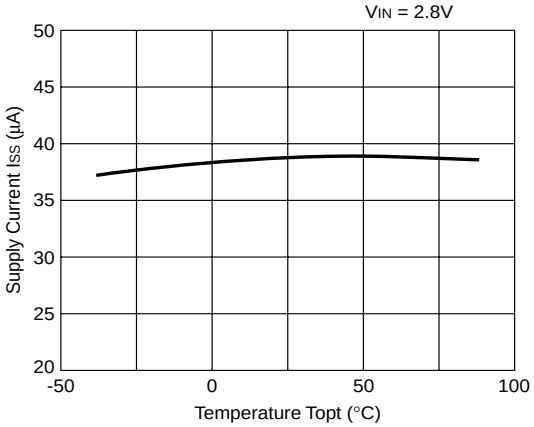


**R1121N401B**

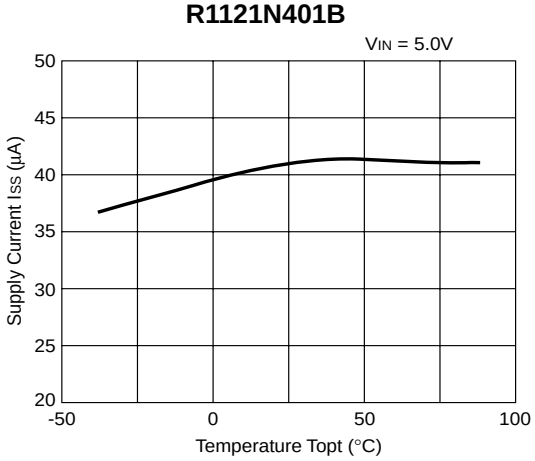


**R1121N501B**

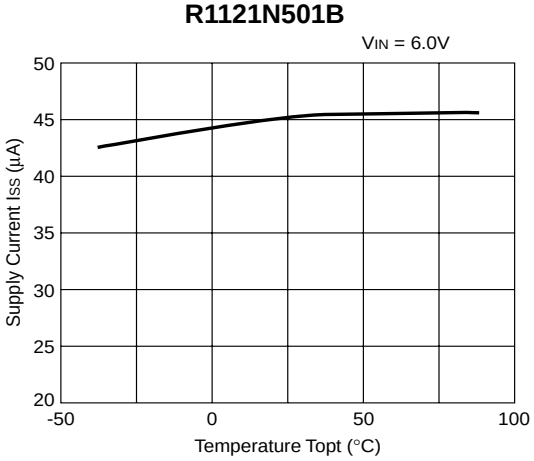

## 7) Dropout Voltage vs. Set Output Voltage

### R1121Nxx1B

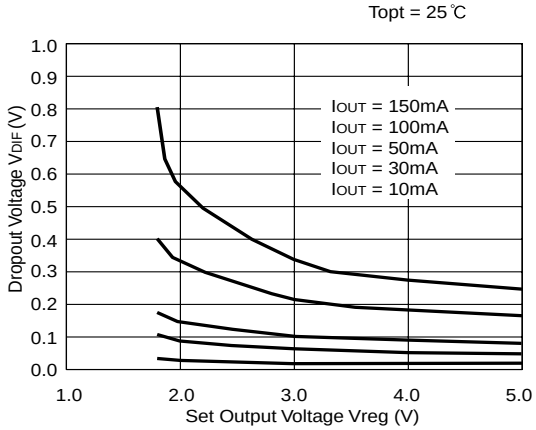


## 8) Ripple Rejection vs. Frequency

### R1121N181B

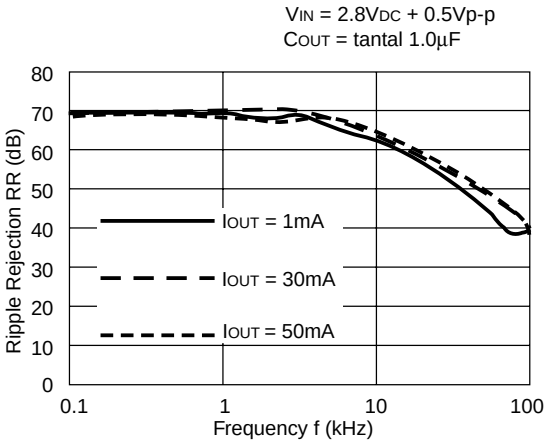


### R1121N181B

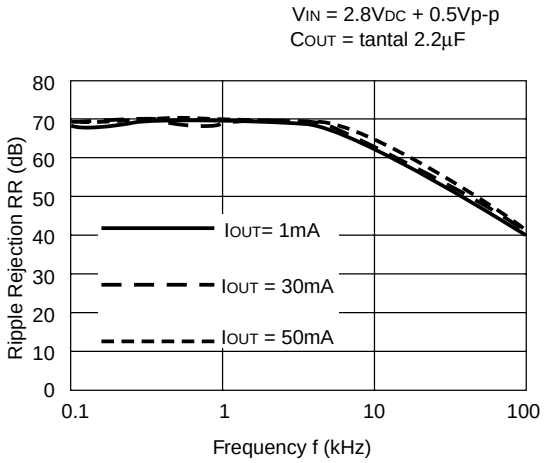


### R1121N301B

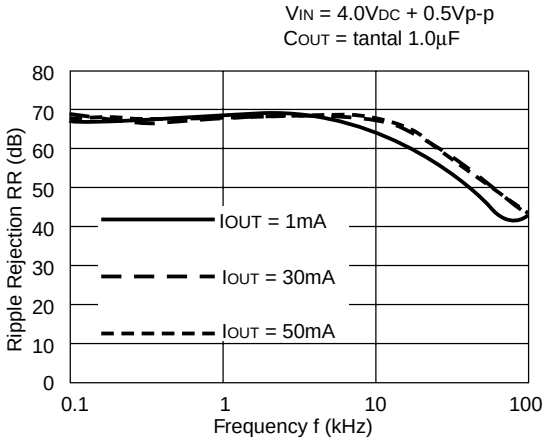


### R1121N301B

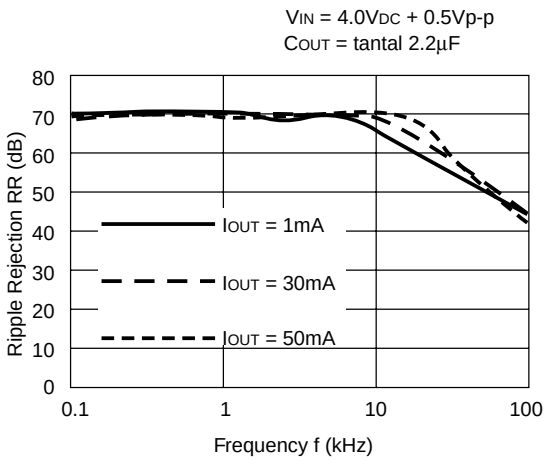

**R1121N401B**

$V_{IN}$ = 5.0$V_{DC}$ + 0.5Vp-p
$C_{OUT}$ = tantal 1.0µF

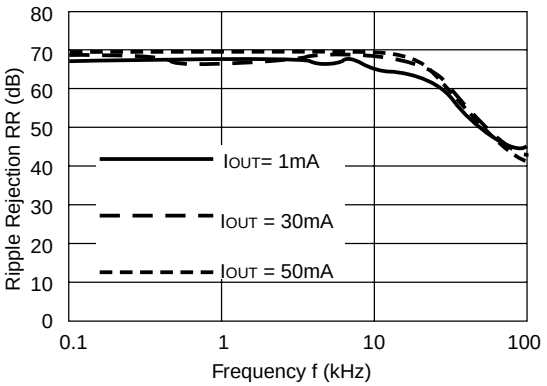


**R1121N401B**

$V_{IN}$ = 5.0$V_{DC}$ + 0.5Vp-p
$C_{OUT}$ = tantal 2.2µF

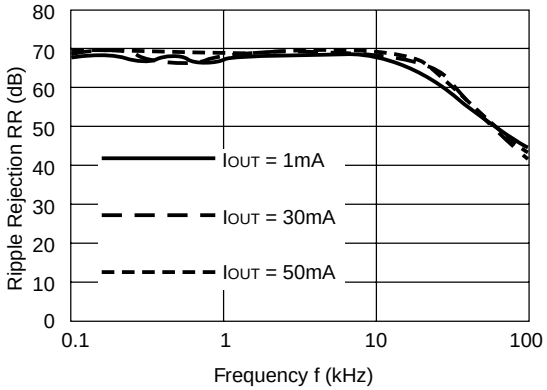


## 9) Ripple Rejection vs. Input Voltage (DC bias)

**R1121N301B**

$I_{OUT}$ = 1mA
$C_{OUT}$ = 2.2µF

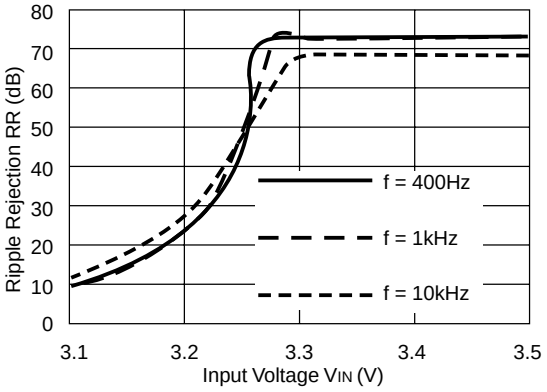


**R1121N301B**

$I_{OUT}$ = 10mA
$C_{OUT}$ = 2.2µF

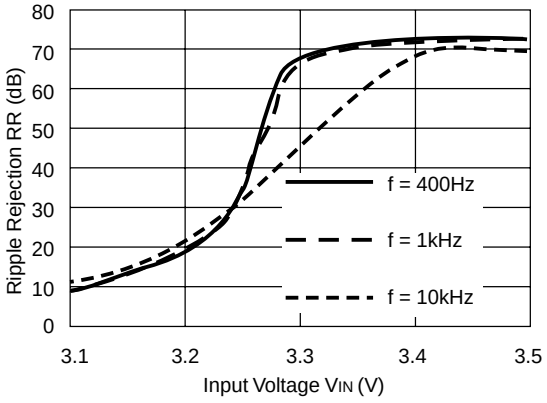


**R1121N301B**

$I_{OUT}$ = 50mA
$C_{OUT}$ = 2.2µF

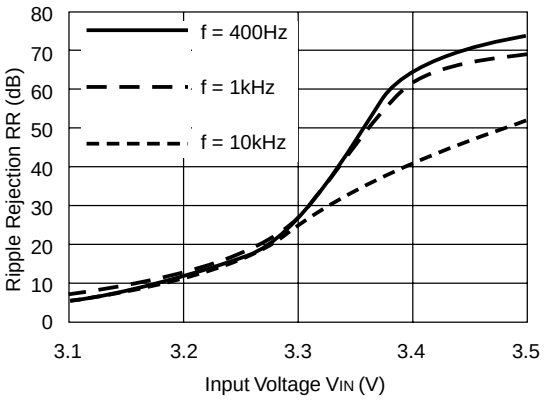

## 10) LineTransient Response

**R1121N301B**

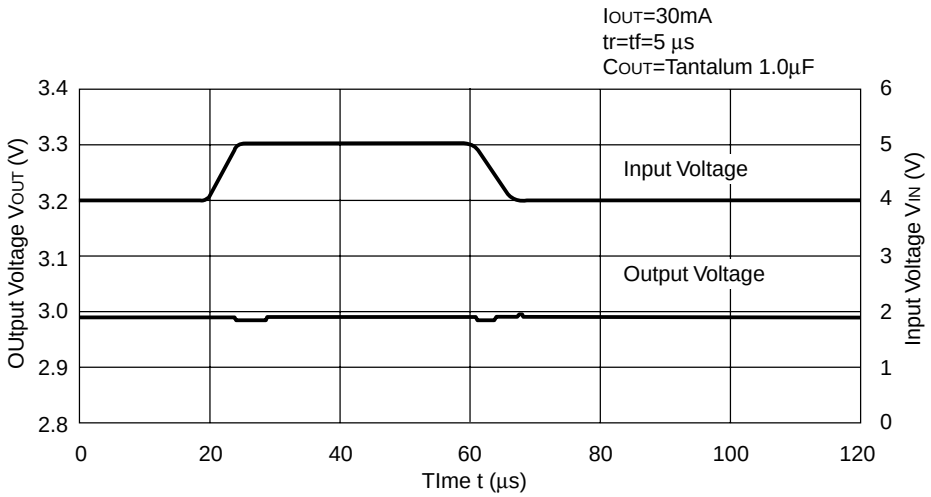


**R1121N301B**

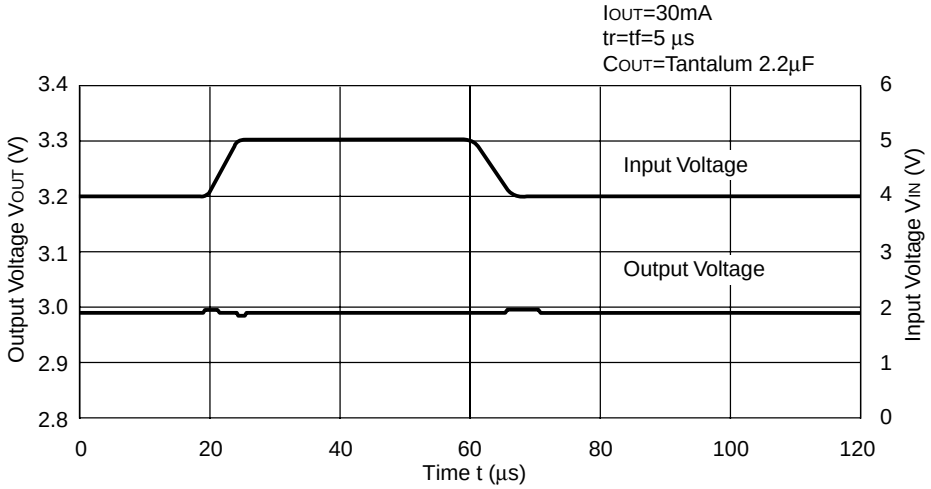


**R1121N301B**

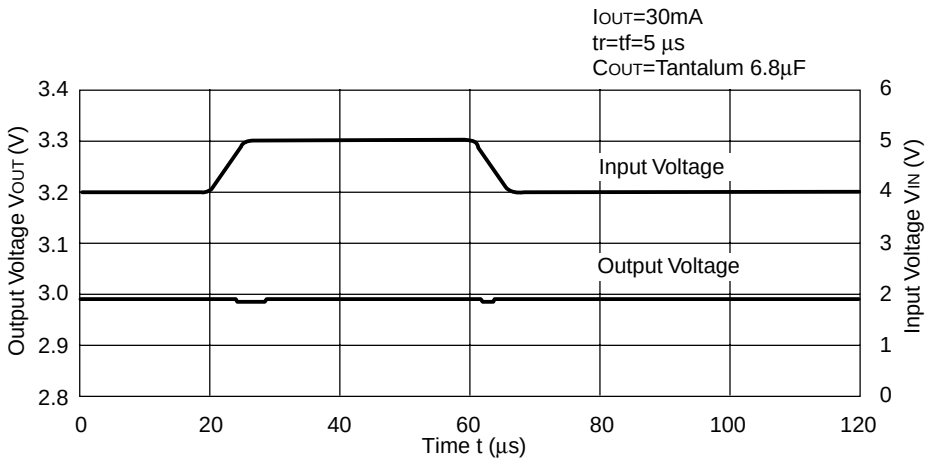

## 11) Load Transient Response

**R1121N301B**

$V_{IN}$=4V
$C_{IN}$=Tantalum 1µF
$C_{OUT}$=Tantalum 1.0µF

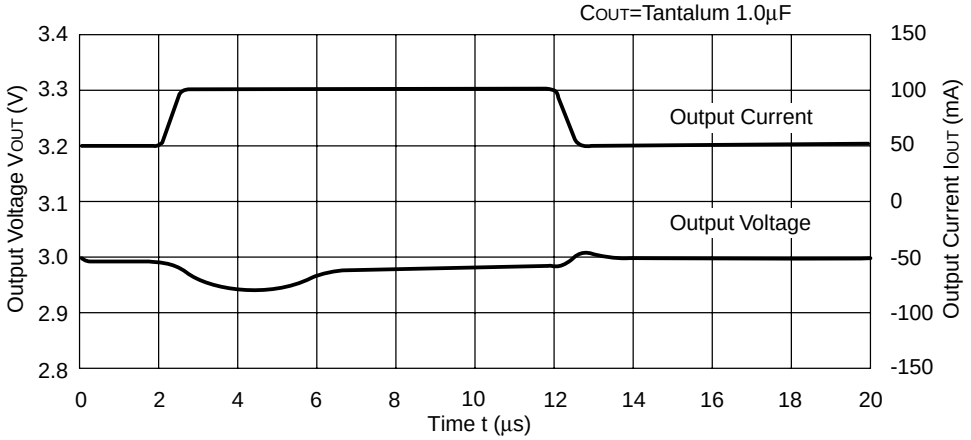


**R1121N301B**

$V_{IN}$=4V
$C_{IN}$=Tantalum 1µF
$C_{OUT}$=Tantalum 2.2µF

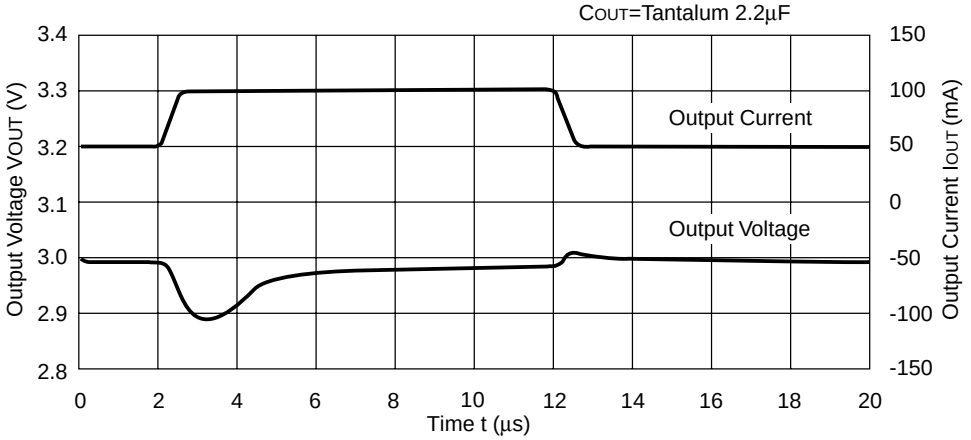


**R1121N301B**

$V_{IN}$=4V
$C_{IN}$=Tantalum 1µF
$C_{OUT}$=Tantalum 6.8µF

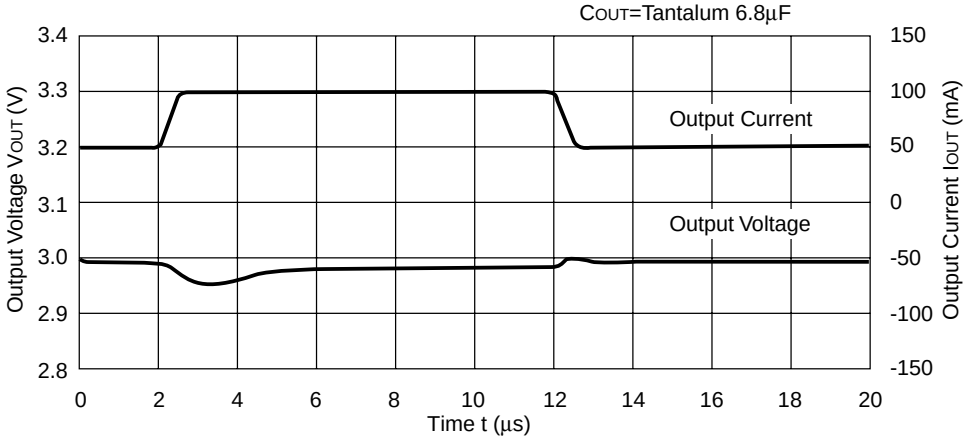

# TECHNICAL NOTES

When using these ICs, be sure to consider the following points:

In these ICs, phase compensation is made for securing stable operation even if the load current is varied. For this purpose, be sure to use a capacitor $C_{OUT}$ with good frequency characteristics and ESR (Equivalent Series Resistance) in the range described as follows:

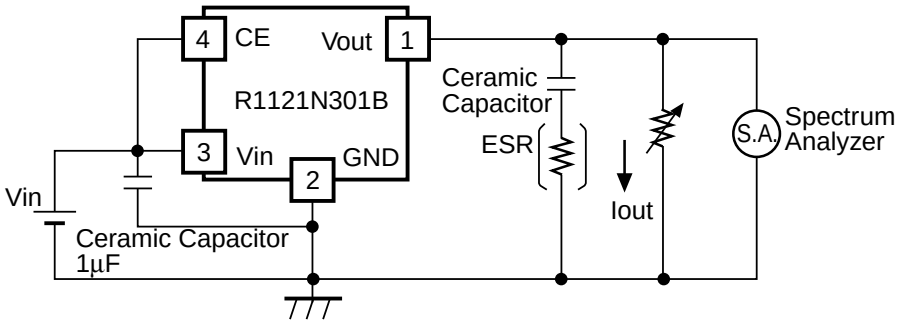


**Measuring Circuit for white noise; R1121N301B**

The relationship between $I_{OUT}$ (output current) and ESR of output capacitor is shown in the graphs below. The conditions when the white noise level is under 40mV (Avg.) are indicated by the hatched area in the graph.

(note: When the additional ceramic capacitors are connected to the output pin with output capacitor for phase compensation, the operation might be unstable. Because of this, test these ICs with as the same external components as the ones to be used on the PCB.)

<Measurement conditions>

(1) $V_{IN}$=4V

(2) Frequency Band: 10Hz to 1MHz

(3) Temperature: 25°C

**R1121N301B**

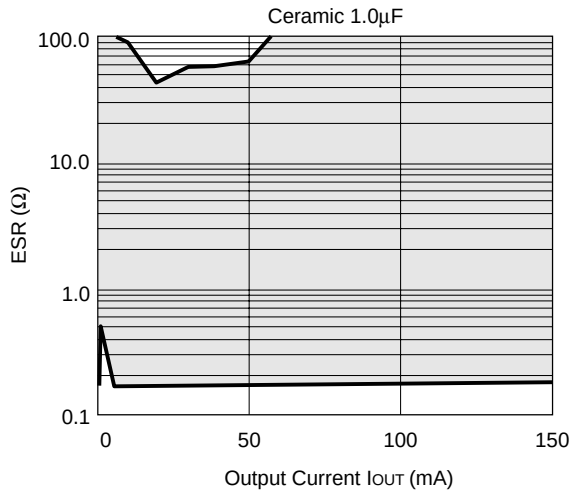


**R1121N301B**

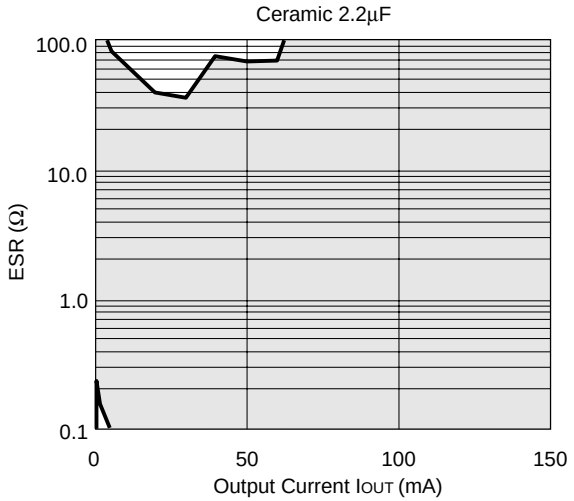

· Make $V_{DD}$ and GND lines sufficient. If their impedance is high, noise pick up or incorrect operation may result.
· Connect the capacitor with a capacitance of 1μF or more between $V_{DD}$ and GND as close as possible.
· Set external components, especially the output capacitor, as close as possible to the ICs and make wiring as short as possible.

## TYPICAL APPLICATION

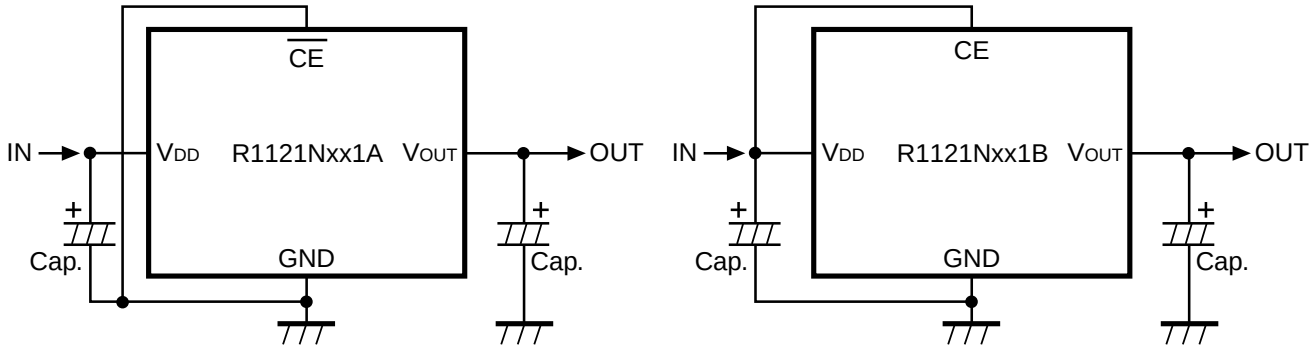

1. The products and the product specifications described in this document are subject to change or discontinuation of production without notice for reasons such as improvement. Therefore, before deciding to use the products, please refer to our sales representatives for the latest information thereon.
2. The materials in this document may not be copied or otherwise reproduced in whole or in part without prior written consent of our company.
3. Please be sure to take any necessary formalities under relevant laws or regulations before exporting or otherwise taking out of your country the products or the technical information described herein.
4. The technical information described in this document shows typical characteristics of and example application circuits for the products. The release of such information is not to be construed as a warranty of or a grant of license under our company's or any third party's intellectual property rights or any other rights.
5. The products listed in this document are intended and designed for use as general electronic components in standard applications (office equipment, telecommunication equipment, measuring instruments, consumer electronic products, amusement equipment etc.). Those customers intending to use a product in an application requiring extreme quality and reliability, for example, in a highly specific application where the failure or misoperation of the product could result in human injury or death (aircraft, spacevehicle, nuclear reactor control system, traffic control system, automotive and transportation equipment, combustion equipment, safety devices, life support system etc.) should first contact us.
6. We are making our continuous effort to improve the quality and reliability of our products, but semiconductor products are likely to fail with certain probability. In order to prevent any injury to persons or damages to property resulting from such failure, customers should be careful enough to incorporate safety measures in their design, such as redundancy feature, fire containment feature and fail-safe feature. We do not assume any liability or responsibility for any loss or damage arising from misuse or inappropriate use of the products.
7. Anti-radiation design is not implemented in the products described in this document.
8. The X-ray exposure can influence functions and characteristics of the products. Confirm the product functions and characteristics in the evaluation stage.
9. WLCSP products should be used in light shielded environments. The light exposure can influence functions and characteristics of the products under operation or storage.
10. There can be variation in the marking when different AOI (Automated Optical Inspection) equipment is used. In the case of recognizing the marking characteristic with AOI, please contact our sales or our distributor before attempting to use AOI.
11. Please contact our sales representatives should you have any questions or comments concerning the products or the technical information.

NISSHINBO

**Nisshinbo Micro Devices Inc.**

**Official website**
https://www.nisshinbo-microdevices.co.jp/en/
**Purchase information**
https://www.nisshinbo-microdevices.co.jp/en/buy/

ENTEGRECİ

Bu belge www.entegreci.com üzerinden sunulmaktadır.

# Elektronik komponent tedarikinde Entegreci

Entegreci, Eskişehir merkezli, Türkiye geneline satış yapan bir elektronik komponent mağazasıdır. Entegreler (IC), mikrodenetleyiciler, transistörler, diyotlar, pasif elemanlar, konnektörler, modüller ve geliştirme kartları tek adetten seri üretim adetlerine kadar satılır. Ürün sayfalarında güncel stok durumunu, fiyatı ve datasheet bağlantısını bulabilirsiniz.

### Parça koduyla arama

Üretici parça numarasını yazın; stok ve fiyatı hemen görün.

**www.entegreci.com**

### Ürün kategorileri

Entegreden kapasitöre tüm elektronik komponent kategorileri.

**Kategorilere göz atın**

### Üreticiler

Aradığınız üreticinin ürünlerini tek sayfada inceleyin.

**Üreticileri görün**

### Toplu alım ve teklif

Listede olmayan ya da yüksek adetli parçalar için teklif isteyin.

**Teklif isteyin**

**www.entegreci.com** | **destek@entegreci.com** | **0850 305 90 34**

Entegreci is an online electronic components store based in Türkiye. Search by manufacturer part number to see stock, prices and datasheets for integrated circuits, microcontrollers, transistors, passive components and connectors, or request a quote for parts that are not listed.

Bu sayfa Entegreci tarafından eklenmiştir. Belgenin önceki sayfaları asıl yayıncısına aittir ve içeriği değiştirilmemiştir; en güncel sürüm için belgenin yayıncısına başvurun.