LOW NOISE 150mA LDO REGULATOR

NO.EA-060-111027

OUTLINE

The R1122N Series are CMOS-based voltage regulator ICs with high output voltage accuracy, extremely low supply current, low ON-resistance, and high Ripple Rejection. Each of these voltage regulator ICs consists of a voltage reference unit, an error amplifier, resistors, a current limit circuit, and a chip enable circuit. These ICs perform with low dropout voltage and a chip enable function.

The line transient response and load transient response of the R1122N Series are excellent, thus these ICs are very suitable for the power supply for hand-held communication equipment.

The output voltage of these ICs is fixed with high accuracy. Since the package for these ICs is SOT-23-5 (Mini-mold) package , high density mounting of the ICs on boards is possible.

FEATURES

- Supply Current ..... Typ. 100μA
- Standby Mode Current ..... Typ. 0.1μA
- Dropout Voltage ..... Typ. 0.19V (I_{OUT}=100mA 3.0V Output type)
- Ripple Rejection ..... Typ. 80dB(f=1kHz)
- Temperature-Drift Coefficient of Output Voltage ..... Typ. ±100ppm/°C
- Line Regulation ..... Typ. 0.05%/V
- Output Voltage Accuracy ..... ±2.0%
- Output Voltage Range ..... 1.5V to 5.0V (0.1V steps)
  (For other voltages, please refer to MARK INFORMATIONS.)
- Package ..... SOT-23-5 (Mini-mold)
- Built-in chip enable circuit (2 types; A: active “Low”, B: active “High”)
- Built-in fold-back protection circuit ..... Short Current Typ.30mA
- Pin-out ..... Similar to the TK112,TK111
- Ceramic Capacitors Recommended to be used with this IC

APPLICATIONS

- Power source for cellular phones such as GSM, CDMA, PCS and so forth.
- Power source for domestic appliances such as cameras, VCRs and camcorders.
- Power source for battery-powered equipment.

BLOCK DIAGRAM

R1122Nxx1A

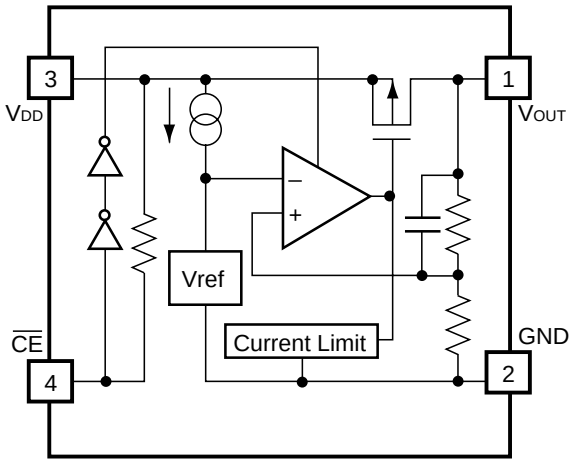

R1122Nxx1B

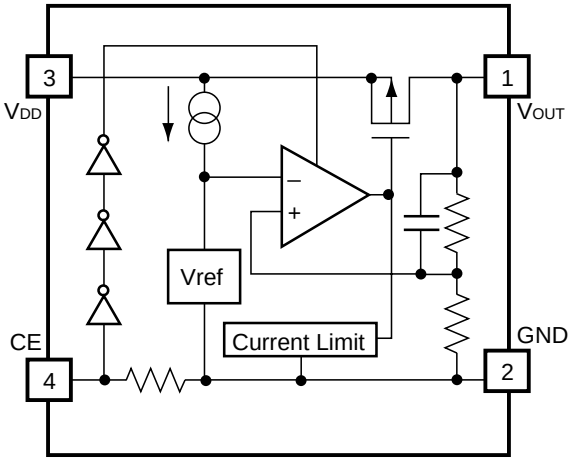

SELECTION GUIDE

The output voltage, the active type for the ICs can be selected at the user's request.

Product Name	Package	Quantity per Reel	Pb Free	Halogen Free
R1122Nxx1∗-TR-FE	SOT-23-5	3,000 pcs	Yes	Yes

xx: The output voltage can be designated in the range from 1.5V(15) to 5.0V(50) in 0.1V steps.
(For other voltages, please refer to MARK INFORMATIONS.)

∗ : Designation of Active Type.
(A) "L" active
(B) "H" active

PIN CONFIGURATION

SOT-23-5

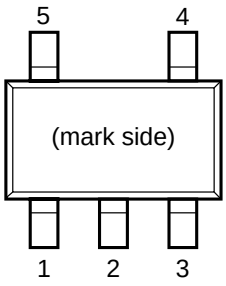

PIN DESCRIPTION

Pin No	Symbol	Description
1	V_{OUT}	Output pin
2	GND	Ground Pin
3	V_{DD}	Input Pin
4	$\overline{CE}$ or CE	Chip Enable Pin
5	NC	No Connection

ABSOLUTE MAXIMUM RATINGS

Symbol	Item	Rating	Unit
V_{IN}	Input Voltage	7.0	V
V_{CE}	Input Voltage($\overline{CE}$ or CE Pin)	-0.3 ~ V_{IN}+0.3	V
V_{OUT}	Output Voltage	-0.3 ~ V_{IN}+0.3	V
I_{OUT}	Output Current	200	mA
P_D	Power Dissipation (SOT-23-5) *	420	mW
Topt	Operating Temperature Range	-40 ~ 85	°C
Tstg	Storage Temperature Range	-55 ~ 125	°C

*) For Power Dissipation, please refer to PACKAGE INFORMATION.

ABSOLUTE MAXIMUM RATINGS

Electronic and mechanical stress momentarily exceeded absolute maximum ratings may cause the permanent damages and may degrade the life time and safety for both device and system using the device in the field.
The functional operation at or over these absolute maximum ratings is not assured.

ELECTRICAL CHARACTERISTICS

- **R1122Nxx1A**

Topt=25°C

Symbol	Item	Conditions	Min.	Typ.	Max.	Unit
V_{OUT}	Output Voltage	V_{IN} = Set V_{OUT} + 1V 1mA ≦ I_{OUT} ≦ 30mA	V_{OUT} ×0.98		V_{OUT} ×1.02	V
I_{OUT}	Output Current	V_{IN} = Set V_{OUT} + 1V When V_{OUT} = Set V_{OUT} -0.1V	150			mA
$\Delta V_{OUT}/\Delta I_{OUT}$	Load Regulation	V_{IN} = Set V_{OUT} + 1V 1mA ≦ I_{OUT} ≦ 80mA		12	40	mV
V_{DIF}	Dropout Voltage	Refer to the ELECTRICAL CHARACTERISTICS by OUTPUT VOLTAGE				
I_{SS}	Supply Current	V_{IN} = Set V_{OUT} + 1V		100	170	μA
Istandby	Supply Current (Standby)	V_{IN} = V_{CE} = Set V_{OUT} + 1V		0.1	1.0	μA
$\Delta V_{OUT}/\Delta V_{IN}$	Line Regulation	Set V_{OUT}+0.5V ≦ V_{IN} ≦ 6.0V I_{OUT} = 30mA		0.05	0.20	%/V
RR	Ripple Rejection	f = 1kHz, Ripple 0.5Vp-p V_{IN} = Set V_{OUT} + 1V		80		dB
V_{IN}	Input Voltage		2.0		6.0	V
$\Delta V_{OUT}/\Delta T_{opt}$	Output Voltage Temperature Coefficient	I_{OUT} = 30mA −40°C ≦ Topt ≦ 85°C		±100		ppm/°C
I_{SC}	Short Current Limit	V_{OUT} = 0V		30		mA
R_{PU}	$\overline{CE}$ Pull-up Resistance		2.5	5.0	10.0	MΩ
V_{CEH}	$\overline{CE}$ Input Voltage “H”		1.5		V_{IN}	V
V_{CEL}	$\overline{CE}$ Input Voltage “L”		0.00		0.25	V
en	Output Noise	BW=10Hz to 100kHz		30		μVrms

RECOMMENDED OPERATING CONDITIONS (ELECTRICAL CHARACTERISTICS)

All of electronic equipment should be designed that the mounted semiconductor devices operate within the recommended operating conditions. The semiconductor devices cannot operate normally over the recommended operating conditions, even if when they are used over such conditions by momentary electronic noise or surge. And the semiconductor devices may receive serious damage when they continue to operate over the recommended operating conditions.

- **R1122Nxx1B**

Topt=25°C

Symbol	Item	Conditions	Min.	Typ.	Max.	Unit
V_{OUT}	Output Voltage	V_{IN} = Set V_{OUT} + 1V 1mA ≦ I_{OUT} ≦ 30mA	V_{OUT} ×0.98		V_{OUT} ×1.02	V
I_{OUT}	Output Current	V_{IN} = Set V_{OUT} + 1V When V_{OUT} = Set V_{OUT} -0.1V	150			mA
$\Delta V_{OUT}/\Delta I_{OUT}$	Load Regulation	V_{IN} = Set V_{OUT} + 1V 1mA ≦ I_{OUT} ≦ 80mA		12	40	mV
V_{DIF}	Dropout Voltage	Refer to the ELECTRICAL CHARACTERISTICS by OUTPUT VOLTAGE				
I_{SS}	Supply Current	V_{IN} = Set V_{OUT} + 1V		100	170	μA
Istandby	Supply Current (Standby)	V_{IN} = Set V_{OUT} + 1V V_{CE} =GND		0.1	1.0	μA
$\Delta V_{OUT}/\Delta V_{IN}$	Line Regulation	Set V_{OUT} + 0.5V ≦ V_{IN} ≦ 6.0V I_{OUT} = 30mA		0.05	0.20	%/V
RR	Ripple Rejection	f = 1kHz, Ripple 0.5Vp-p V_{IN} = Set V_{OUT} + 1V		80		dB
V_{IN}	Input Voltage		2.0		6.0	V
$\Delta V_{OUT}/\Delta T_{opt}$	Output Voltage Temperature Coefficient	I_{OUT} = 30mA −40°C ≦ Topt ≦ 85°C		±100		ppm/°C
I_{SC}	Short Current Limit	V_{OUT} = 0V		30		mA
R_{PD}	CE Pull-down Resistance		2.5	5.0	10.0	MΩ
V_{CEH}	CE Input Voltage “H”		1.5		V_{IN}	V
V_{CEL}	CE Input Voltage “L”		0.00		0.25	V
en	Output Noise	BW=10Hz to 100kHz		30		μVrms

RECOMMENDED OPERATING CONDITIONS (ELECTRICAL CHARACTERISTICS)

All of electronic equipment should be designed that the mounted semiconductor devices operate within the recommended operating conditions. The semiconductor devices cannot operate normally over the recommended operating conditions, even if when they are used over such conditions by momentary electronic noise or surge. And the semiconductor devices may receive serious damage when they continue to operate over the recommended operating conditions.

ELECTRICAL CHARACTERISTICS by OUTPUT VOLTAGE

Topt = 25°C

Output Voltage V_{OUT} (V)	Dropout Voltage V_{DIF} (V)		
	Condition	Typ.	Max.
1.5 ≦ V_{OUT} ≦ 1.6	I_{OUT} = 100mA	0.32	0.55
1.7 ≦ V_{OUT} ≦ 1.8		0.28	0.47
1.9 ≦ V_{OUT} ≦ 2.3		0.25	0.35
2.4 ≦ V_{OUT} ≦ 2.7		0.20	0.29
2.8 ≦ V_{OUT} ≦ 5.0		0.19	0.26

OPERATION

R1122Nxx1A

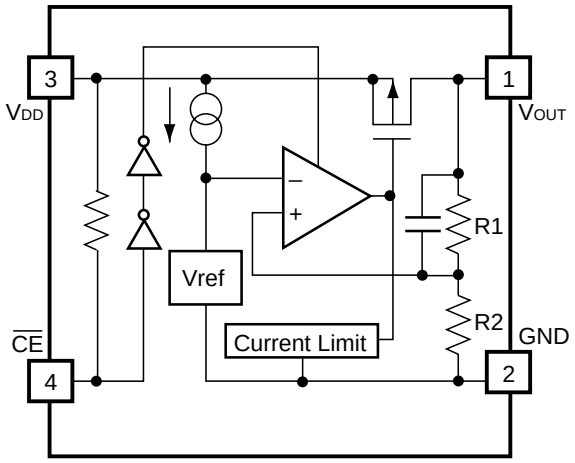

R1122Nxx1B

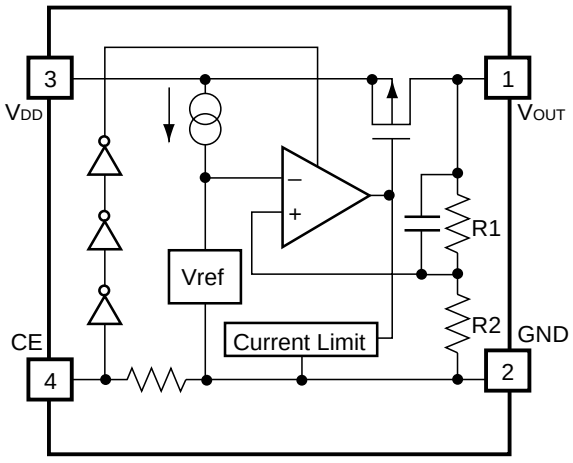

In these ICs, fluctuation of the output voltage, V_{OUT} is detected by feed-back registers R1, R2, and the result is compared with a reference voltage by the error amplifier, so that a constant voltage is output.

A current limit circuit for protection at short mode, and a chip enable circuit, are included.

TEST CIRCUITS

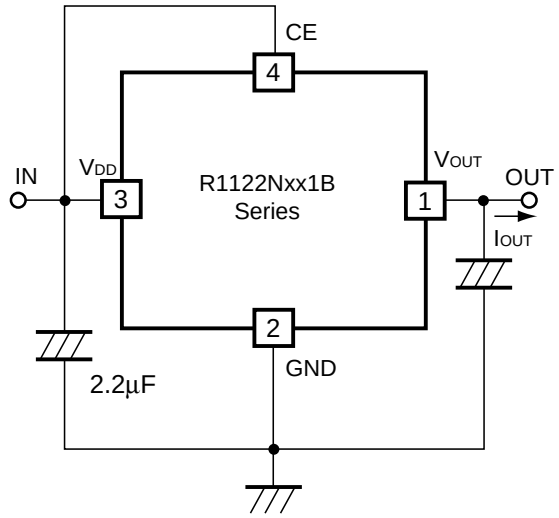

Fig.1 Standard test Circuit

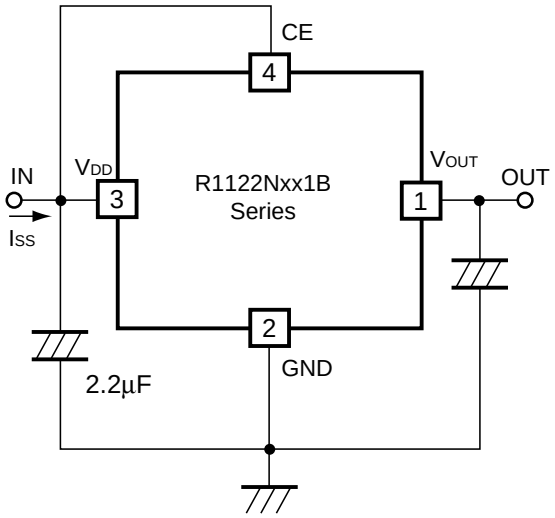

Fig.2 Supply Current Test Circuit

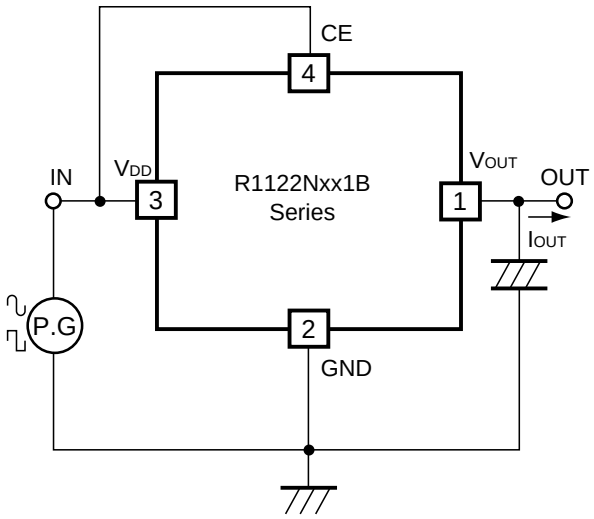

Fig.3 Ripple Rejection, Line Transient Response Test Circuit

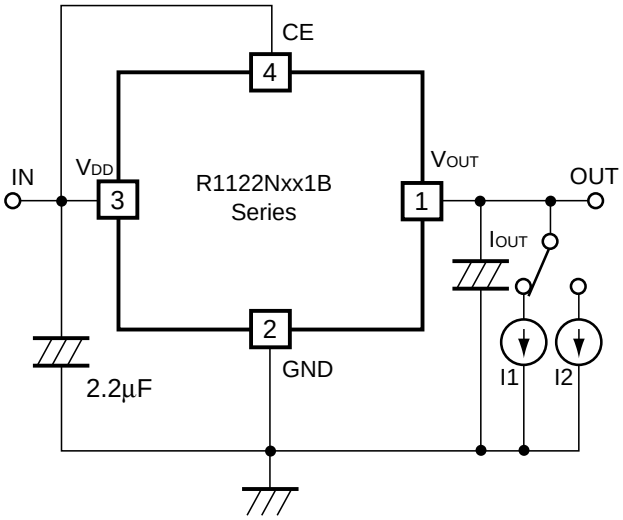

Fig.4 Load Transient Response Test Circuit

TECHNICAL NOTES

When using these ICs, consider the following points:

Phase Compensation

In these ICs, phase compensation is made for securing stable operation even if the load current is varied. For this purpose, be sure to use a capacitor C_{OUT} with good frequency characteristics and ESR (Equivalent Series Resistance).

(Note: When the additional ceramic capacitors are connected to the output pin with the output capacitor for phase compensation, the operation might be unstable. Because of this, test these ICs with the same external components as the ones to be used on the PCB.)

Recommended Capacitors ; GRM40X5R225K6.3 (Murata)
GRM40-034X5R335K6.3 (Murata)
GRM40-034X5R475K6.3 (Murata)

PCB Layout

Make V_{DD} and GND lines sufficient. If their impedance is high, picking up the noise or unstable operation may result. Connect a capacitor with a capacitance of 2.2μF or more between V_{DD} and GND pin as close as possible.

Set external components, especially output capacitor as close as possible to the ICs and make wiring as short as possible.

TYPICAL APPLICATION

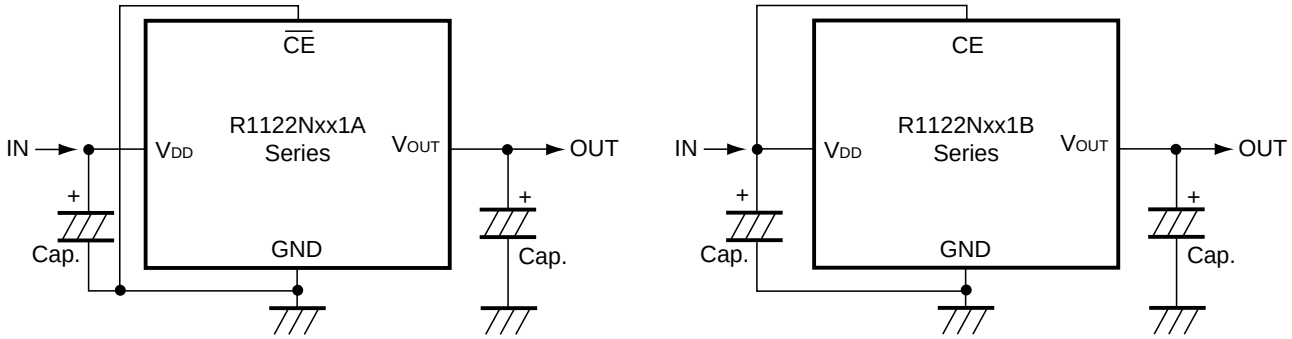

(External Components)

Output Capacitor ; Ceramic 2.2μF (Set output voltage in the range from 2.5 to 5.0V)
Ceramic 4.7μF (Set output voltage in the range from 1.5 to 2.5V)
Input Capacitor ; Ceramic 2.2μF

TYPICAL CHARACTERISTICS

1) Output Voltage vs. Output Current

R1122N151B

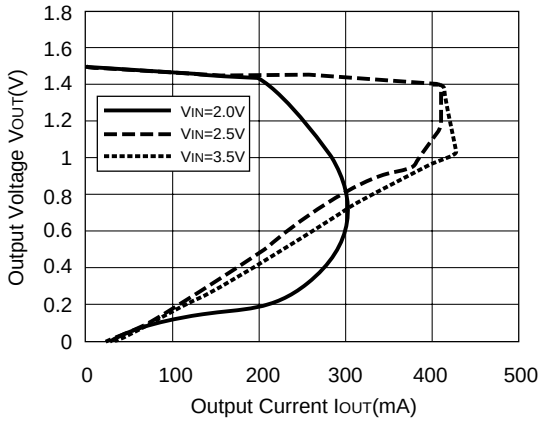

R1122N201B

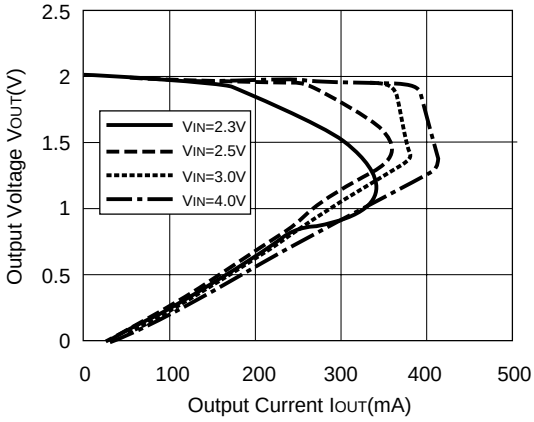

R1122N301B

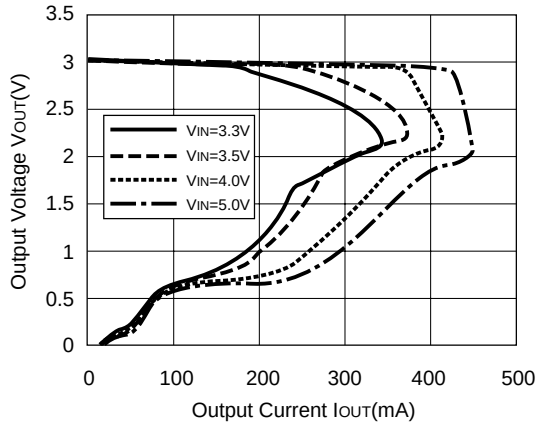

R1122N401B

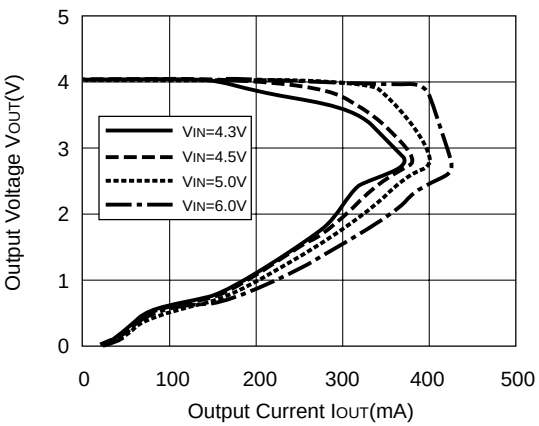

R1122N501B

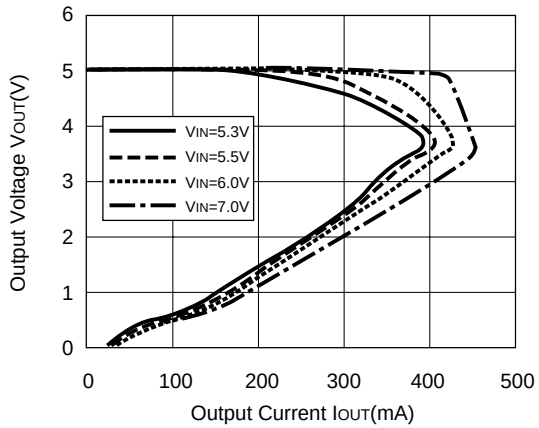

2) Output Voltage vs. Input Voltage

R1122N151B

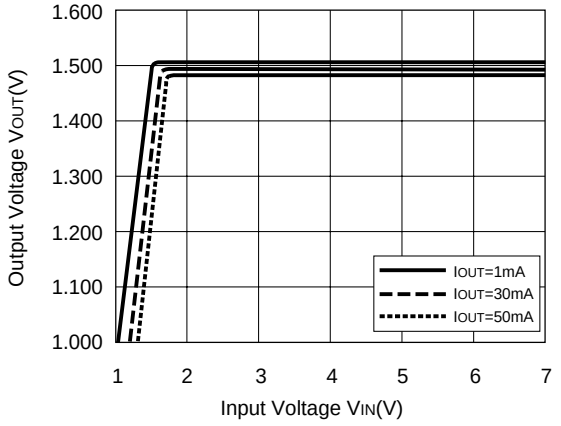

R1122N201B

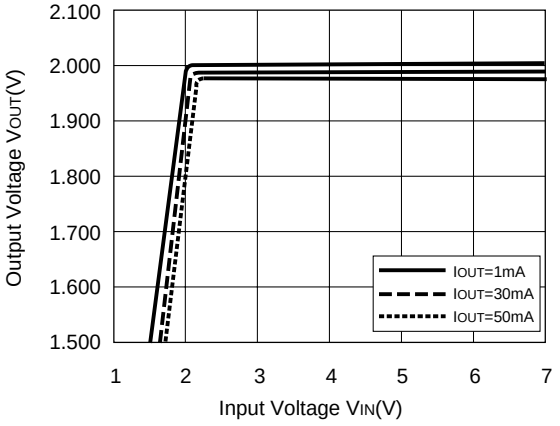

R1122N301B

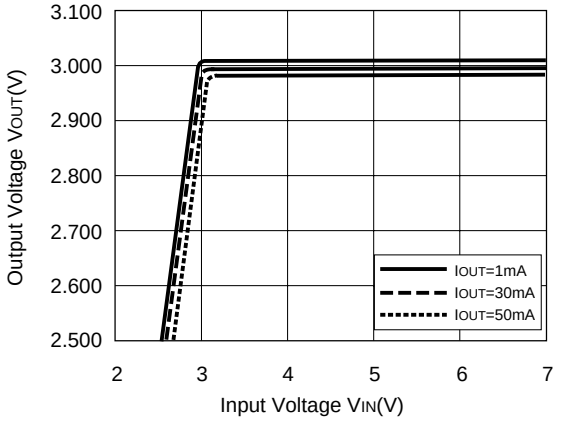

R1122N401B

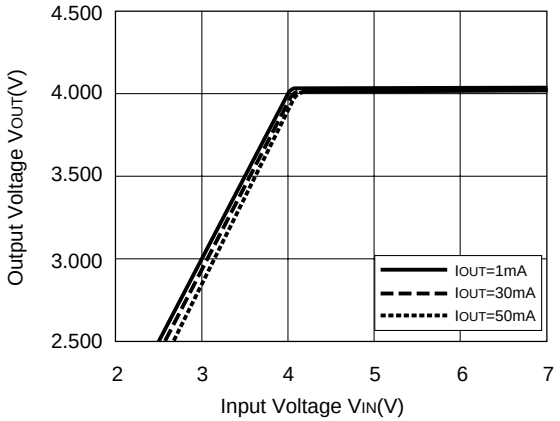

R1122N501B

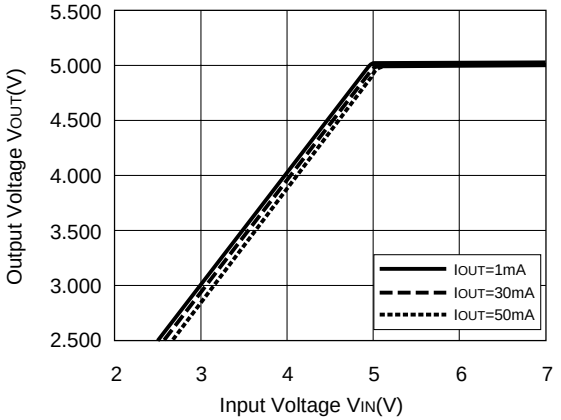

3) Dropout Voltage vs. Output Current

R1122N151B

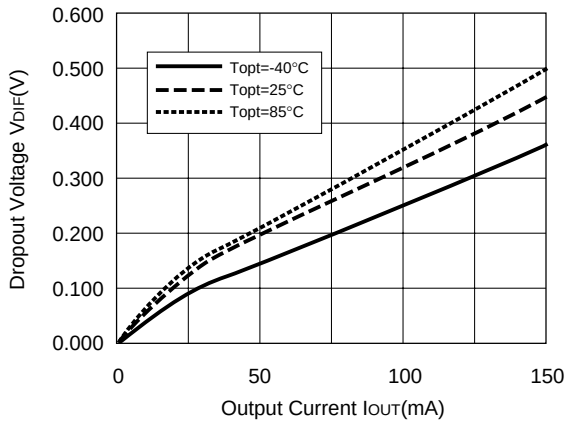

R1122N201B

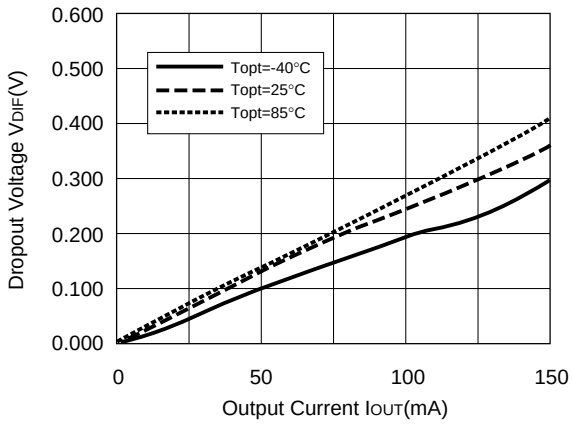

R1122N301B

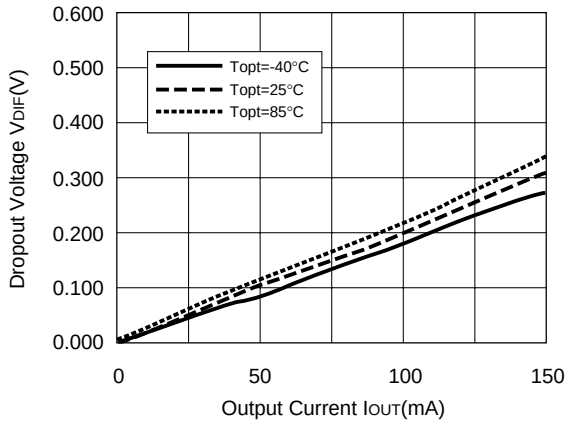

R1122N401B

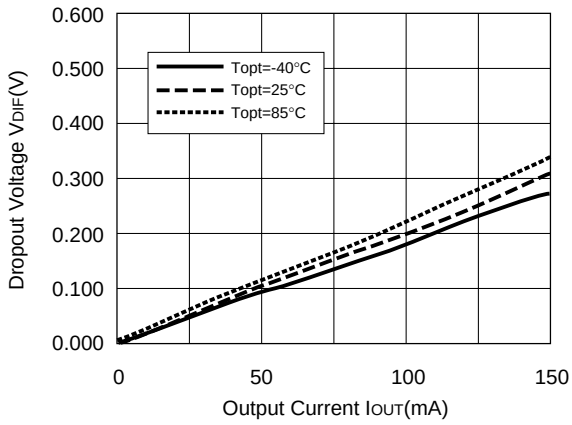

R1122N501B

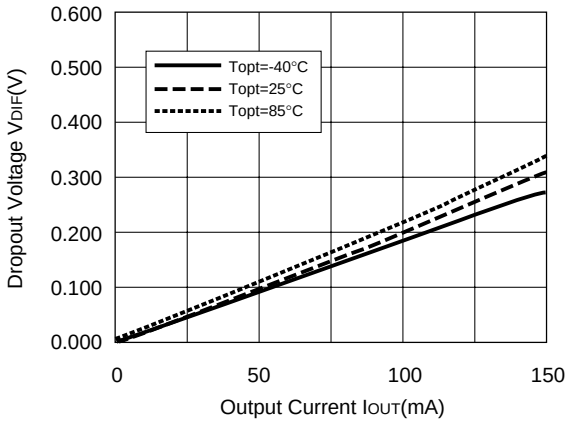

4) Output Voltage vs. Temperature

R1122N151A/B

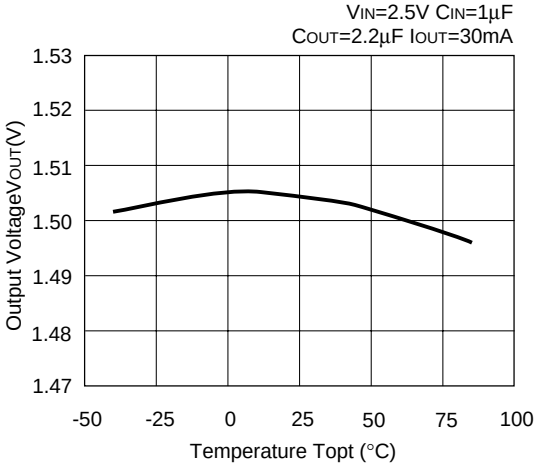

R1122N201A/B

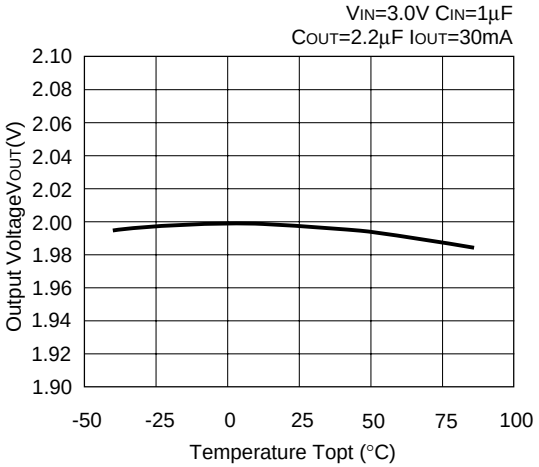

R1122N301A/B

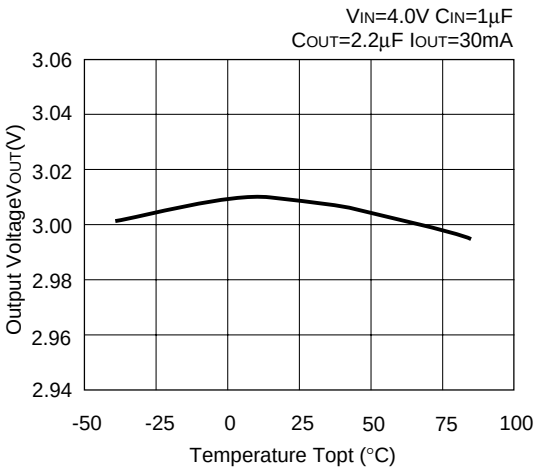

R1122N401A/B

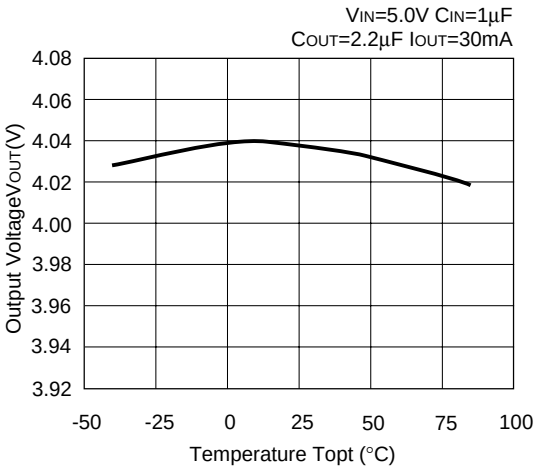

R1122N501A/B

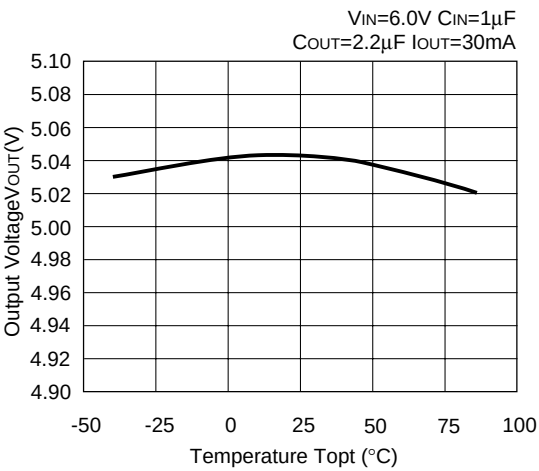

5) Supply Current vs. Input Voltage

R1122N151B

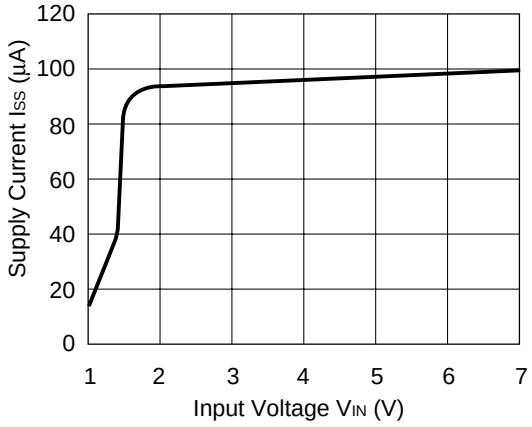

R1122N201B

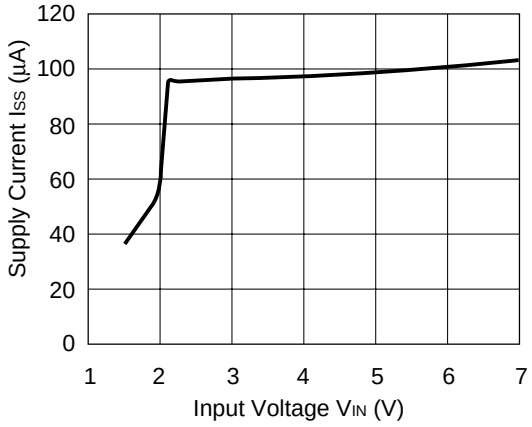

R1122N301B

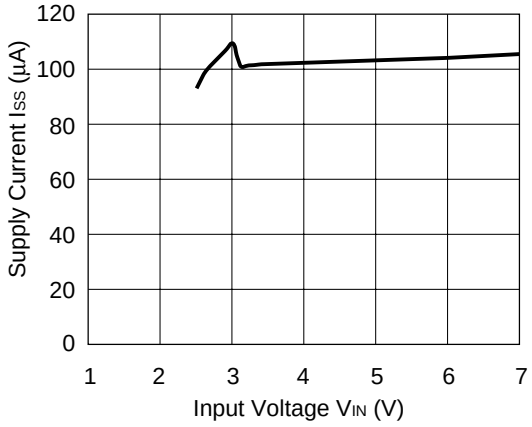

R1122N401B

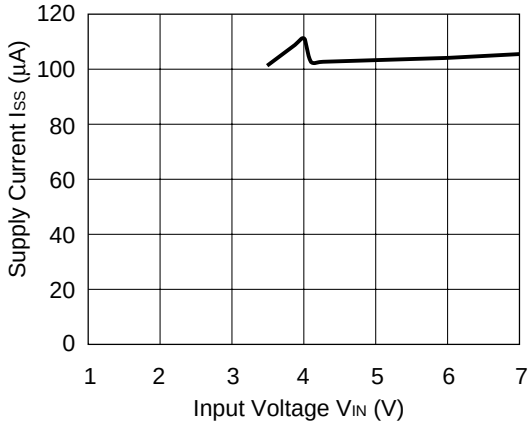

R1122N501B

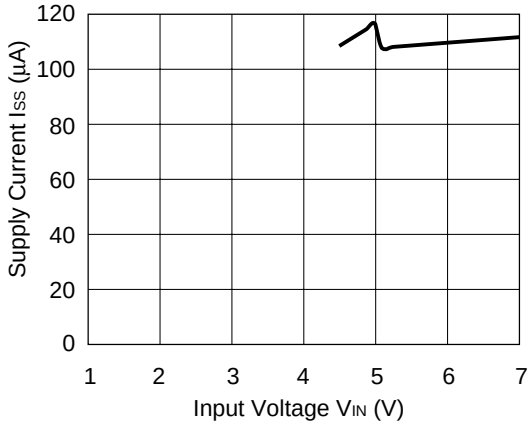

6) Supply Current vs. Temperature

R1122N151A/B

V_{IN}=2.5V C_{IN}=1µF
C_{OUT}=2.2µF

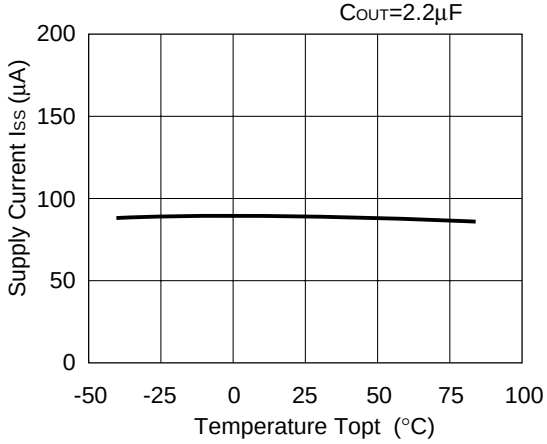

R1122N201A/B

V_{IN}=3.0V C_{IN}=1µF
C_{OUT}=2.2µF

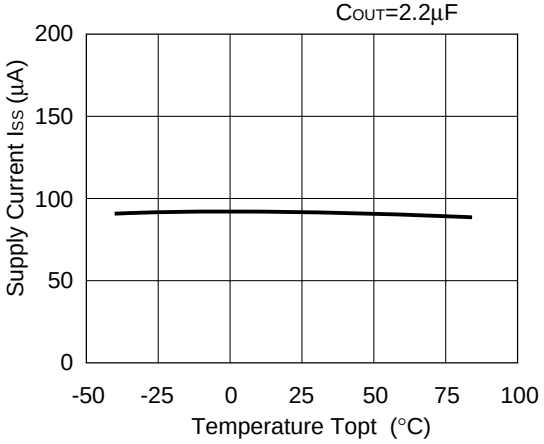

R1122N301A/B

V_{IN}=4.0V C_{IN}=1µF
C_{OUT}=2.2µF

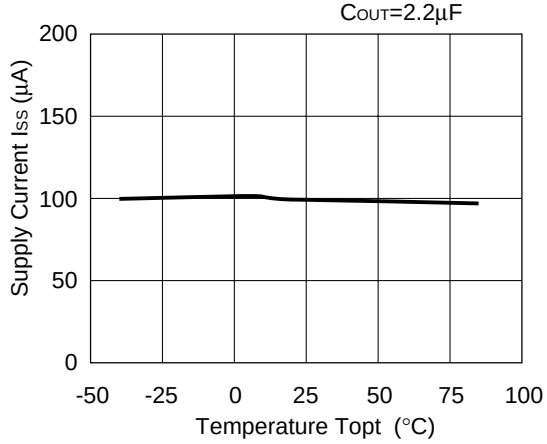

R1122N401A/B

V_{IN}=5.0V C_{IN}=1µF
C_{OUT}=2.2µF

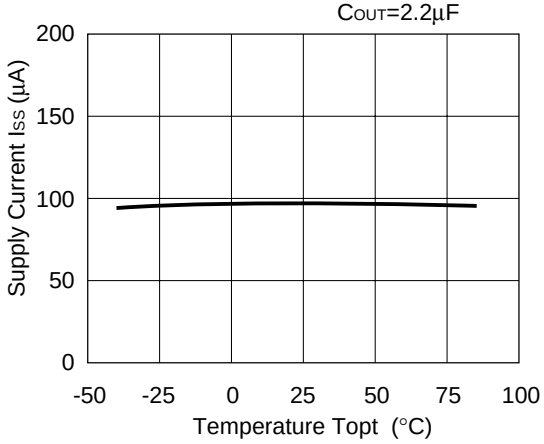

R1122N501A/B

V_{IN}=6.0V C_{IN}=1µF
C_{OUT}=2.2µF

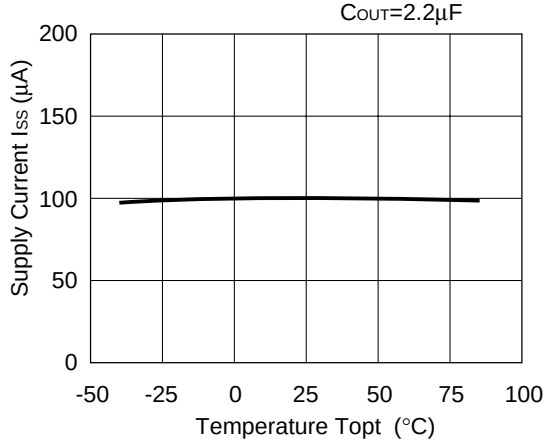

7) Ripple Rejection vs. Frequency

R1122N151A/B

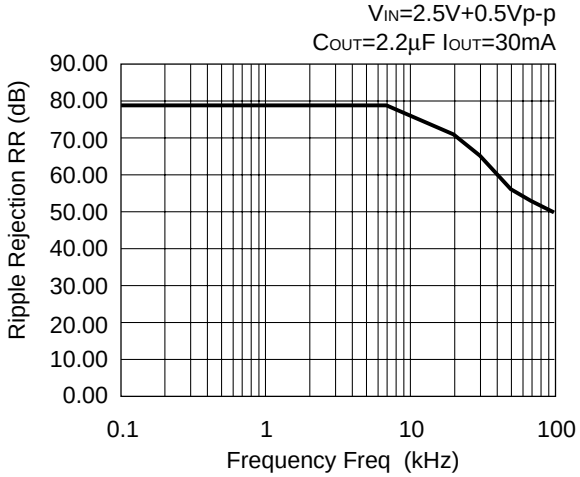

R1122N201A/B

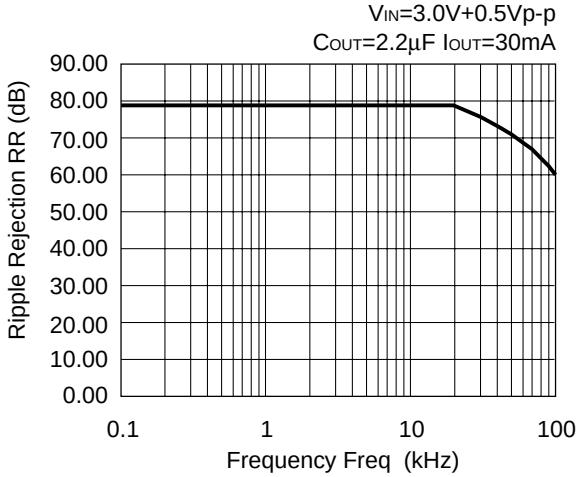

R1122N301A/B

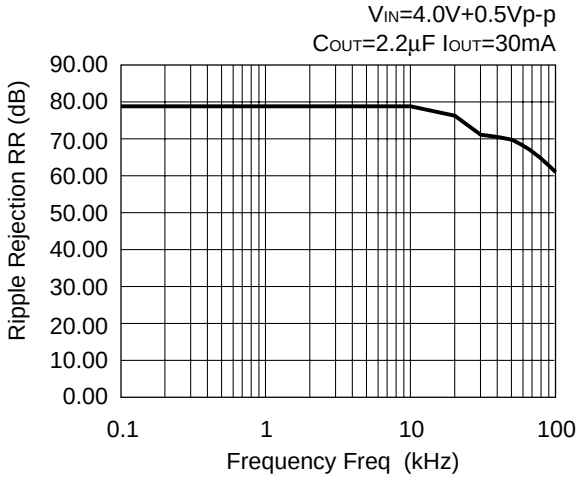

R1122N401A/B

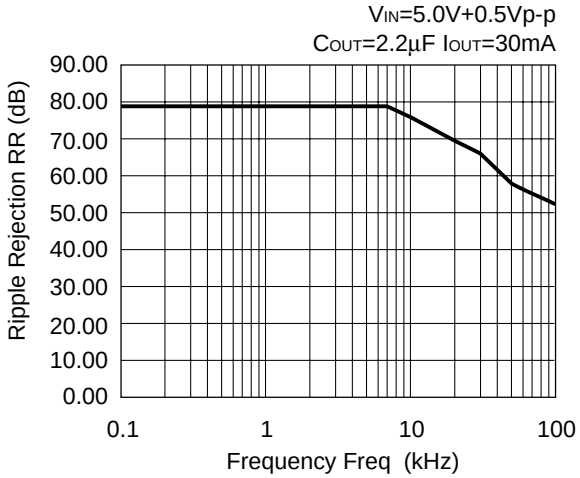

R1122N501A/B

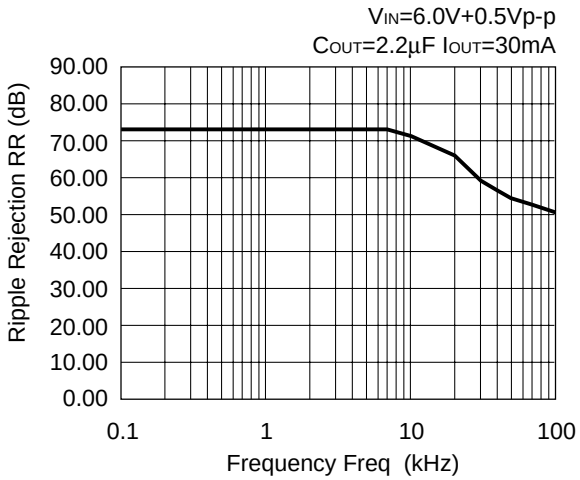

8) Ripple Rejection vs. Input Voltage (DC bias)

R1122N301B

C_{OUT}=Ceramic 2.2µF
I_{OUT}=1mA

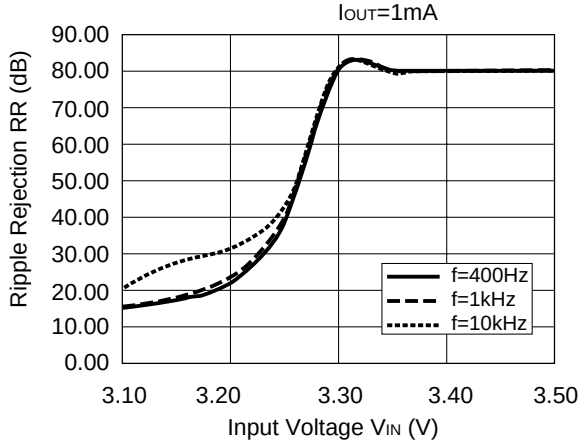

R1122N301B

C_{OUT}=Ceramic 2.2µF
I_{OUT}=10mA

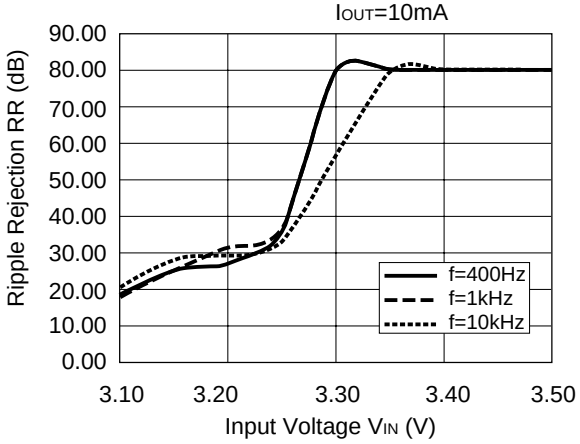

R1122N301B

C_{OUT}=Ceramic 2.2µF
I_{OUT}=50mA

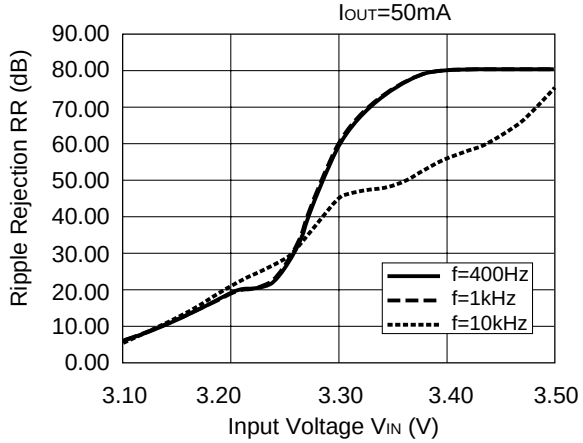

9) Input Transient Response

R1122N501B

Topt=25°C

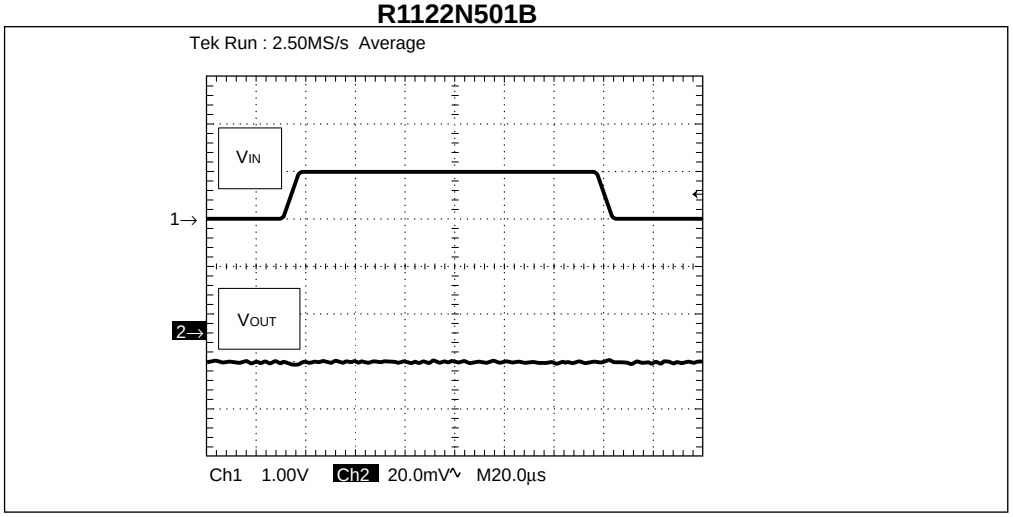

V_{IN}=2.5V↔3.5V
I_{OUT}=30mA
C_{IN}=none
C_{OUT}=2.2µF
tr/tf=5µs

R1122N201B

Topt=25°C

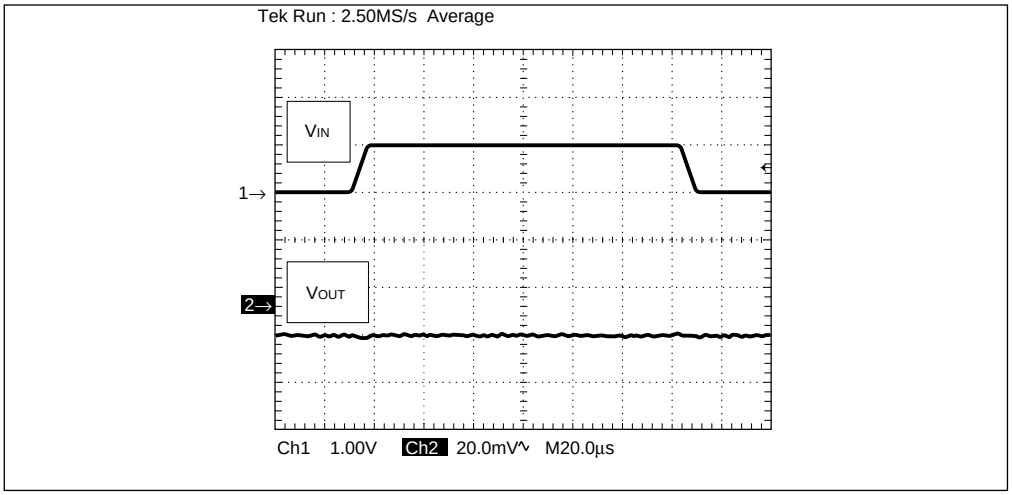

V_{IN}=3.0V↔4.0V
I_{OUT}=30mA
C_{IN}=none
C_{OUT}=2.2µF
tr/tf=5µs

R1122N301B

Topt=25°C

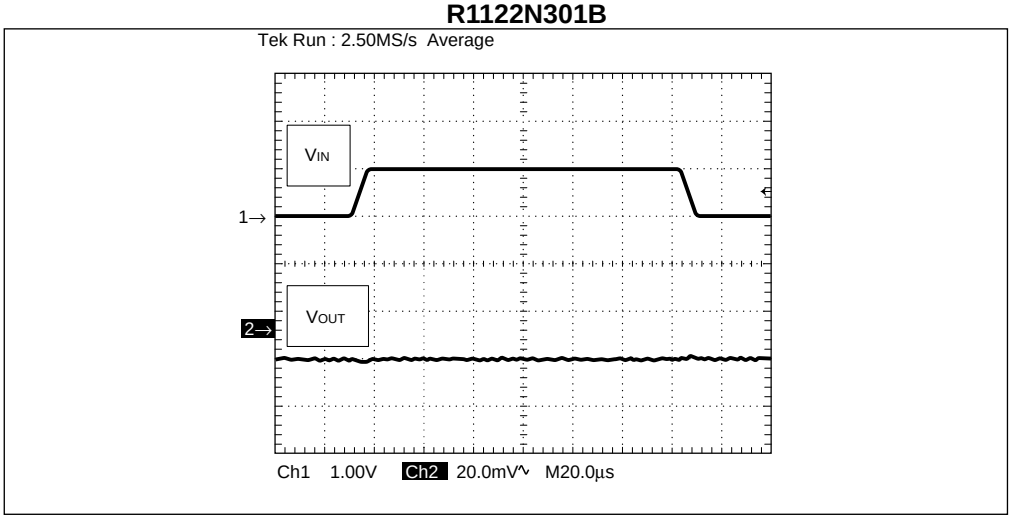

V_{IN}=4.0V↔5.0V
I_{OUT}=30mA
C_{IN}=none
C_{OUT}=2.2µF
tr/tf=5µs

R1122N401B

Topt=25°C

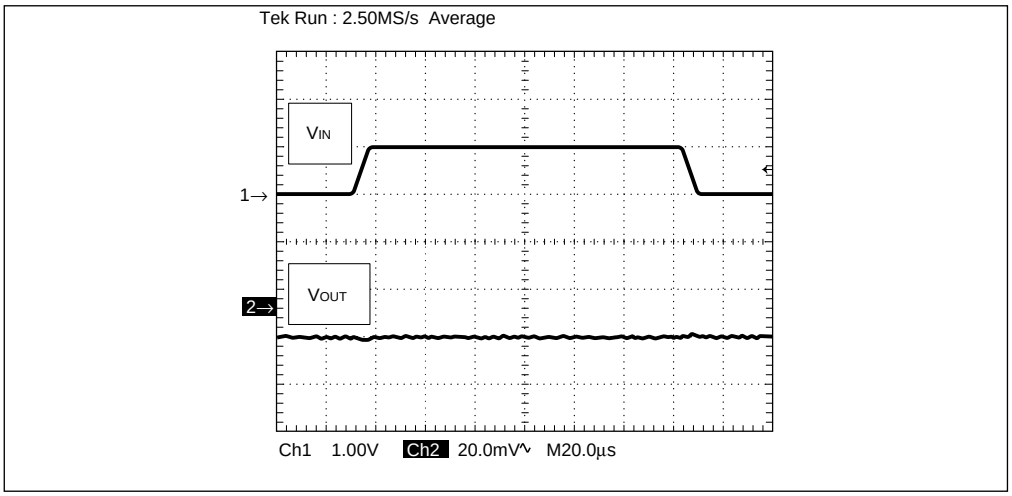

V_{IN}=5.0V↔6.0V
I_{OUT}=30mA
C_{IN}=none
C_{OUT}=2.2µF
tr/tf=5µs

R1122N501B

Topt=25°C

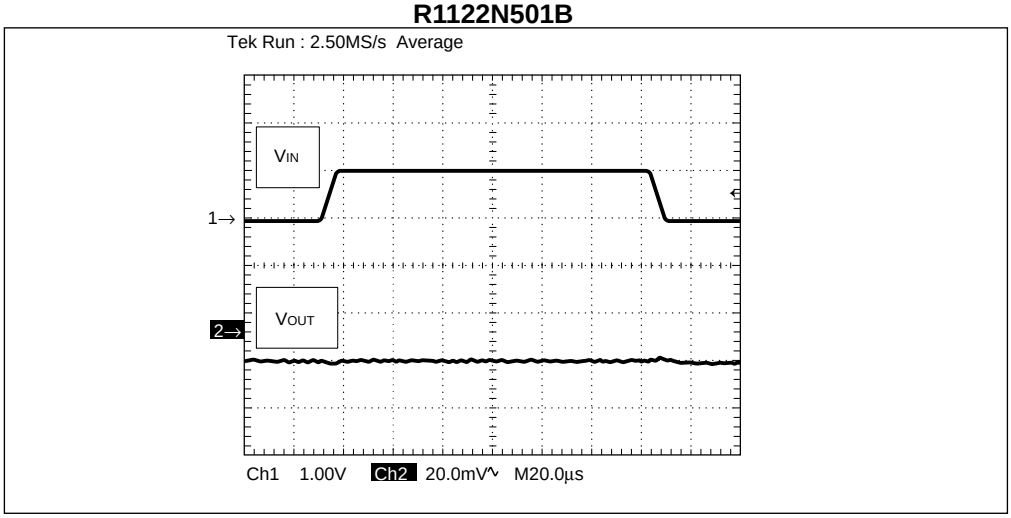

V_{IN}=6.0V↔7.0V
I_{OUT}=30mA
C_{IN}=none
C_{OUT}=2.2µF
tr/tf=5µs

10) Load Transient Response

R1122N151B

Topt=25°C

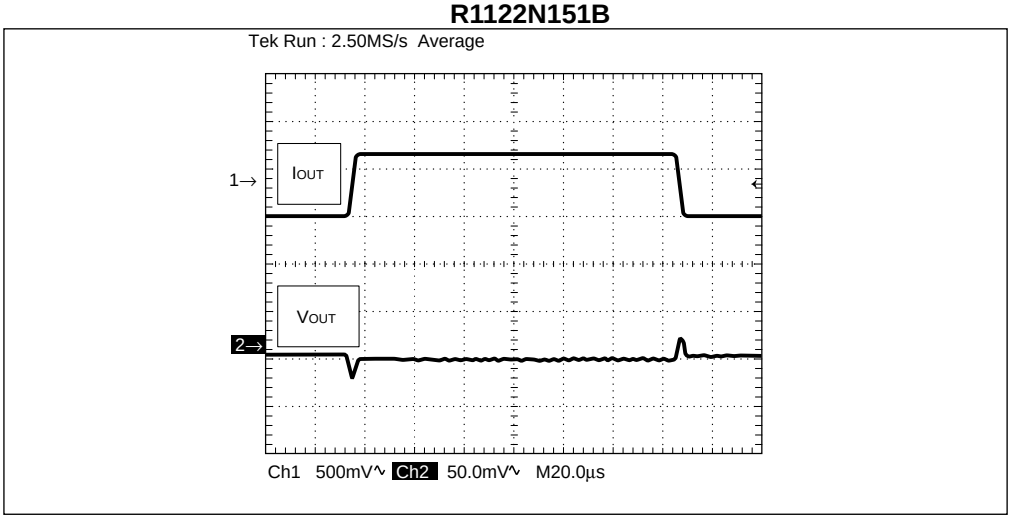

I_{OUT}=50mA↔100mA
V_{IN}=2.5V
C_{IN}=2.2µF
C_{OUT}=2.2µF
tr/tf=5µs

R1122N201B

Topt=25°C

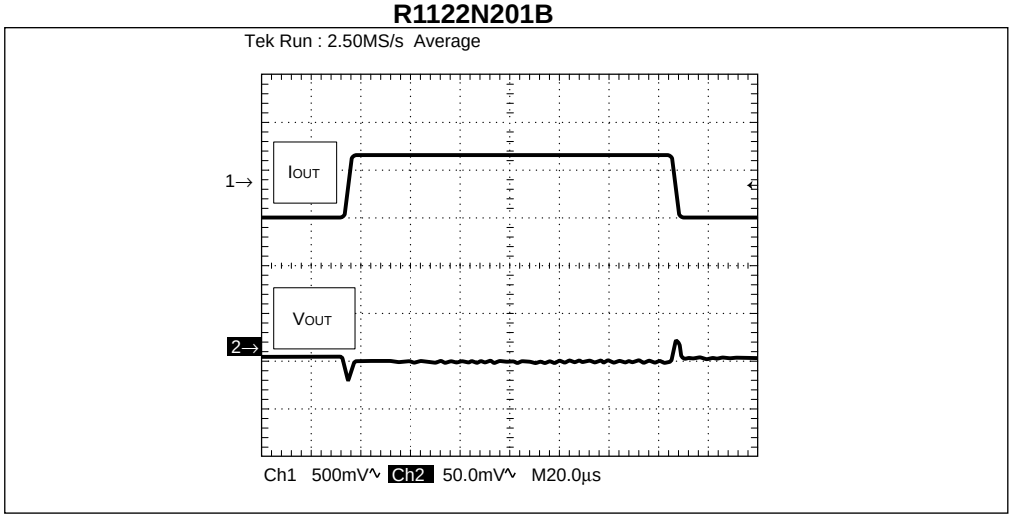

I_{OUT}=50mA↔100mA
V_{IN}=3.0V
C_{IN}=2.2µF
C_{OUT}=2.2µF
tr/tf=5µs

R1122N301B

Topt=25°C

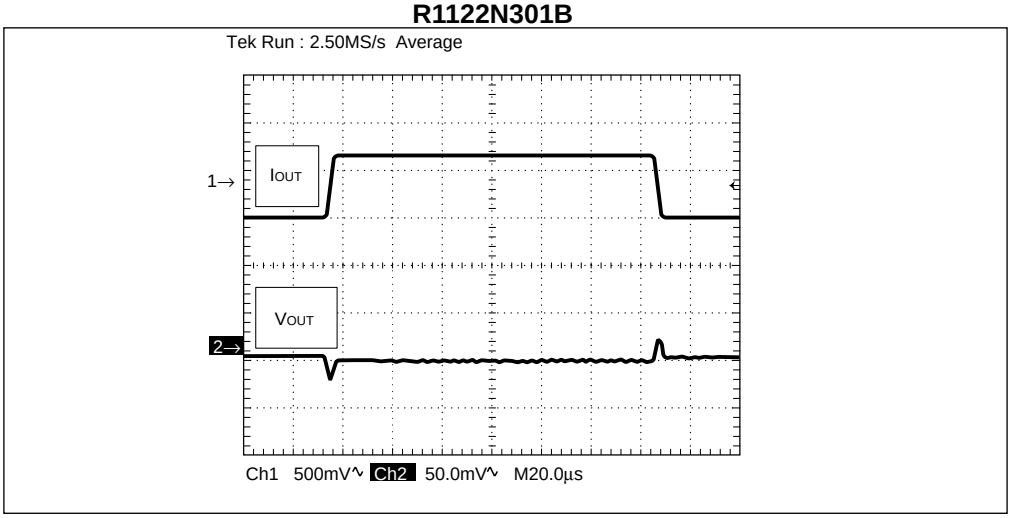

I_{OUT}=50mA↔100mA
V_{IN}=4.0V
C_{IN}=2.2µF
C_{OUT}=2.2µF
tr/tf=5µs

R1122N401B

Topt=25°C

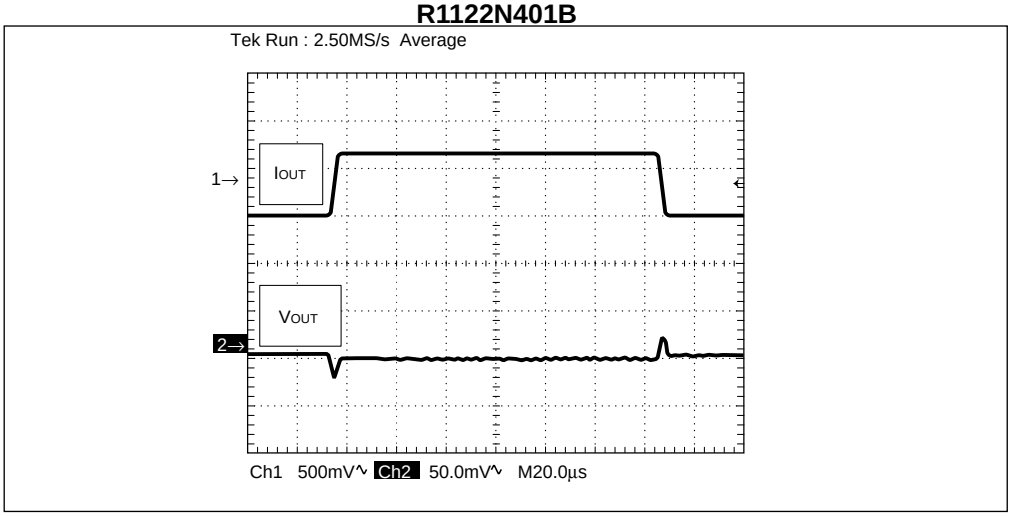

I_{OUT}=50mA↔100mA
V_{IN}=5.0V
C_{IN}=2.2µF
C_{OUT}=2.2µF
tr/tf=5µs

R1122N501B

Topt=25°C

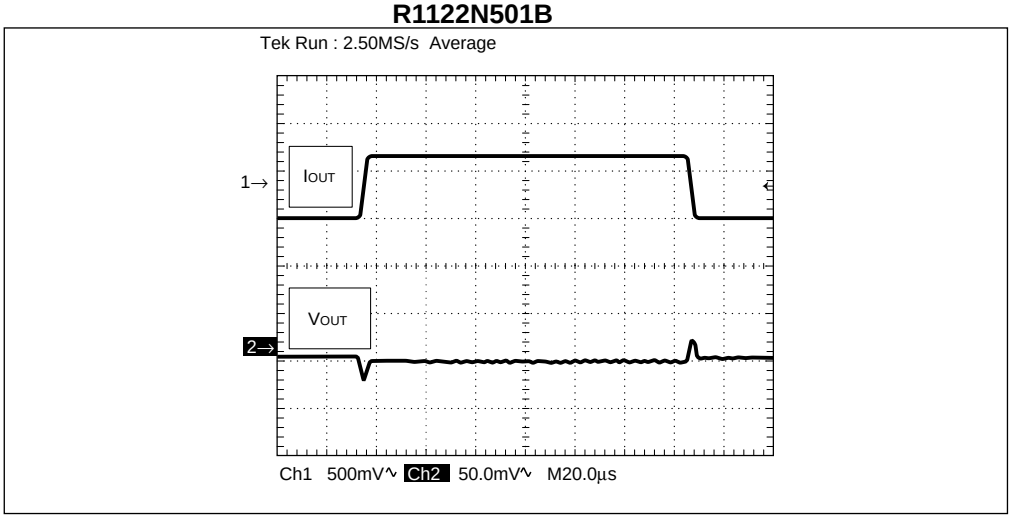

I_{OUT}=50mA↔100mA
V_{IN}=6.0V
C_{IN}=2.2µF
C_{OUT}=2.2µF
tr/tf=5µs

TECHNICAL NOTES

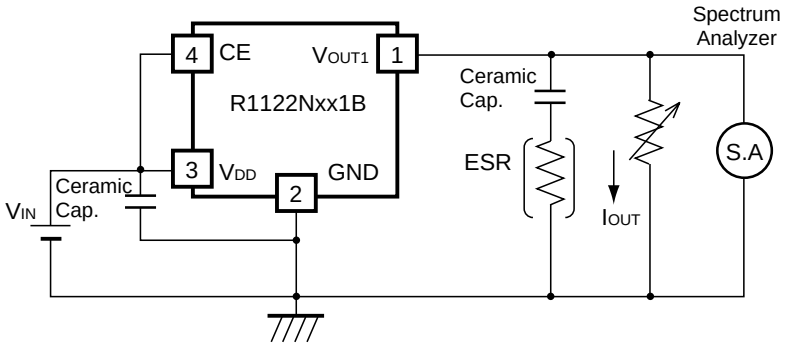

Measuring Circuit for white noise; R1122N301B

The relationship between I_{OUT} (output current) and ESR of the output capacitor is shown in the graphs below. The conditions when the white noise level is under 40μV (Avg.) are indicated by the hatched area in the graph. (Note: When additional ceramic capacitors are connected to the output pin with the output capacitor for phase compensation, operation might be unstable. Because of this, test these ICs with the same external components as the ones to be used on the PCB.)

<Measuring Conditions>
(1)V_{IN}=V_{OUT}+1V
(2)Frequency band: 10Hz to 1MHz
(3)Temperature: 25°C

1. The products and the product specifications described in this document are subject to change or discontinuation of production without notice for reasons such as improvement. Therefore, before deciding to use the products, please refer to our sales representatives for the latest information thereon.
2. The materials in this document may not be copied or otherwise reproduced in whole or in part without prior written consent of our company.
3. Please be sure to take any necessary formalities under relevant laws or regulations before exporting or otherwise taking out of your country the products or the technical information described herein.
4. The technical information described in this document shows typical characteristics of and example application circuits for the products. The release of such information is not to be construed as a warranty of or a grant of license under our company's or any third party's intellectual property rights or any other rights.
5. The products listed in this document are intended and designed for use as general electronic components in standard applications (office equipment, telecommunication equipment, measuring instruments, consumer electronic products, amusement equipment etc.). Those customers intending to use a product in an application requiring extreme quality and reliability, for example, in a highly specific application where the failure or misoperation of the product could result in human injury or death (aircraft, spacevehicle, nuclear reactor control system, traffic control system, automotive and transportation equipment, combustion equipment, safety devices, life support system etc.) should first contact us.
6. We are making our continuous effort to improve the quality and reliability of our products, but semiconductor products are likely to fail with certain probability. In order to prevent any injury to persons or damages to property resulting from such failure, customers should be careful enough to incorporate safety measures in their design, such as redundancy feature, fire containment feature and fail-safe feature. We do not assume any liability or responsibility for any loss or damage arising from misuse or inappropriate use of the products.
7. Anti-radiation design is not implemented in the products described in this document.
8. The X-ray exposure can influence functions and characteristics of the products. Confirm the product functions and characteristics in the evaluation stage.
9. WLCSP products should be used in light shielded environments. The light exposure can influence functions and characteristics of the products under operation or storage.
10. There can be variation in the marking when different AOI (Automated Optical Inspection) equipment is used. In the case of recognizing the marking characteristic with AOI, please contact our sales or our distributor before attempting to use AOI.
11. Please contact our sales representatives should you have any questions or comments concerning the products or the technical information.

NISSHINBO

Nisshinbo Micro Devices Inc.

Official website
https://www.nisshinbo-microdevices.co.jp/en/
Purchase information
https://www.nisshinbo-microdevices.co.jp/en/buy/

ENTEGRECİ

Bu belge www.entegreci.com üzerinden sunulmaktadır.

Elektronik komponent tedarikinde Entegreci

Entegreci, Eskişehir merkezli, Türkiye geneline satış yapan bir elektronik komponent mağazasıdır. Entegreler (IC), mikrodenetleyiciler, transistörler, diyotlar, pasif elemanlar, konnektörler, modüller ve geliştirme kartları tek adetten seri üretim adetlerine kadar satılır. Ürün sayfalarında güncel stok durumunu, fiyatı ve datasheet bağlantısını bulabilirsiniz.

Parça koduyla arama

Üretici parça numarasını yazın; stok ve fiyatı hemen görün.

www.entegreci.com

Ürün kategorileri

Entegreden kapasitöre tüm elektronik komponent kategorileri.

Kategorilere göz atın

Üreticiler

Aradığınız üreticinin ürünlerini tek sayfada inceleyin.

Üreticileri görün

Toplu alım ve teklif

Listede olmayan ya da yüksek adetli parçalar için teklif isteyin.

Teklif isteyin

www.entegreci.com | **destek@entegreci.com** | **0850 305 90 34**

Entegreci is an online electronic components store based in Türkiye. Search by manufacturer part number to see stock, prices and datasheets for integrated circuits, microcontrollers, transistors, passive components and connectors, or request a quote for parts that are not listed.

Bu sayfa Entegreci tarafından eklenmiştir. Belgenin önceki sayfaları asıl yayıncısına aittir ve içeriği değiştirilmemiştir; en güncel sürüm için belgenin yayıncısına başvurun.