300mA LDO REGULATOR

NO.EA-078-140822

OUTLINE

The R1130x Series are CMOS-based voltage regulator (VR) ICs. VR function has features of high ripple rejection, low dropout voltage, high output voltage accuracy, and ultra-low supply current. Each of these ICs consists of a voltage reference unit, an error amplifier, resistors for setting output voltage, and a current limit circuit. Each of the R1130xxxxA/B type includes also a chip enable circuit.

The output voltage of the R1130xxxxC type is adjustable with external resistors.

The output voltage of R1130xxxxA/B is fixed in the IC. Low supply current by the merit of CMOS process and built-in transistors with low ON-resistance make low dropout voltage. These regulators in the R1130x Series are remarkable improvement on the current regulators in terms of ripple rejection, input transient response, and load transient response. Maximum Output Current is large for its compact size.

Thus, the R1130x Series are suitable for power supply for CD-drives, DVD-drives, and so forth.

Since the packages for these ICs are the SOT-89-5 package or HSON-6 (Discontinued), high density mounting of the ICs on boards is possible.

FEATURES

- Supply Current ..... Typ. 50μA
- Standby Current ..... Typ. 0.1μA (VR) for A type
- Ripple Rejection ..... Typ. 60dB (f=1kHz) (VR)
- Output Current ..... Min. 300mA (V_{IN}=V_{OUT}+1V)
- Output Voltage Range ..... 1.5V to 5.0V (0.1V steps)
  Externally specified with the ADJUST pin
  (Reference Voltage 1.8V : C Version)
  (For other voltages, please refer to MARK INFORMATIONS.)
- Output Voltage Accuracy ..... ±2.0%(VR) for A/B type,
  ±2.0% (Reference Voltage for adjustable VR) for C type
- Dropout Voltage ..... Typ. 0.2V (I_{OUT}=100mA) (VR)
- Temperature-drift Coefficient of Output Voltage ..... ±100ppm/°C
- Absolute Maximum Voltage 9.0V
- Packages ..... SOT-89-5, HSON-6 (Discontinued)
- Built-in Current Limit Circuit
- Internal Phase Compensation (small output capacitance such as 0.1μF Ceramic can be used with.)

APPLICATIONS

- Power source for CD-drives and DVD-drives, HDD.
- Local Power source for Notebook PC.

BLOCK DIAGRAMS

R1130HxxxA

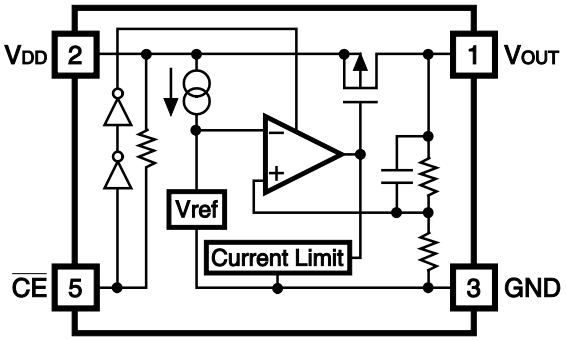

R1130DxxxA (Discontinued)

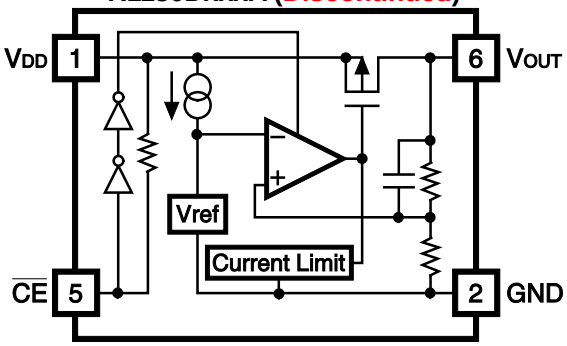

R1130HxxxB

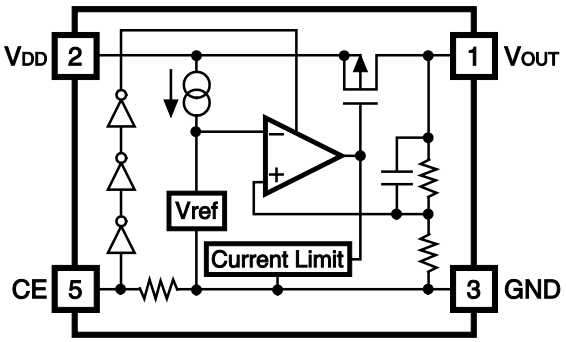

R1130DxxxB (Discontinued)

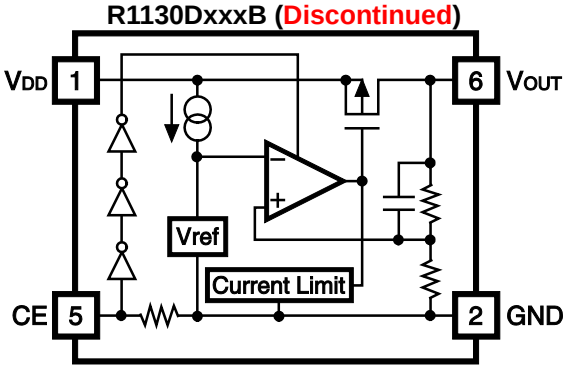

R1130HxxxC

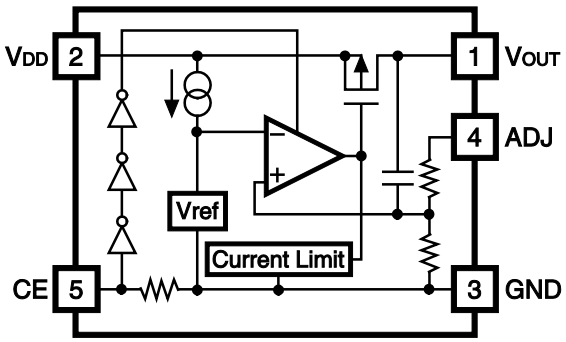

R1130DxxxC (Discontinued)

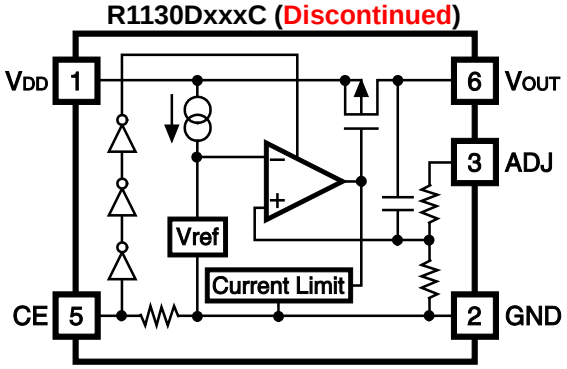

SELECTION GUIDE

The output voltage, CE pin polarity, package for the ICs can be selected at the user's request.

Product Name	Package	Quantity per Reel	Pb Free	Halogen Free
R1130Dxx1∗-TR-FE	HSON-6 (Discontinued)	3,000 pcs	Yes	Yes
R1130Hxx1∗-T1-FE	SOT-89-5	1,000 pcs	Yes	Yes

xx: The output voltage can be designated in the range from 1.5V(15) to 5.0V(50) in 0.1V steps.
(C Version is fixed at 00.)
(For other voltages, please refer to MARK INFORMATIONS.)

∗ : CE pin polarity are options as follows.
(A) "L" active
(B) "H" active
(C) "H" active, with ADJUST pin.

PIN CONFIGURATION

● **SOT-89-5**

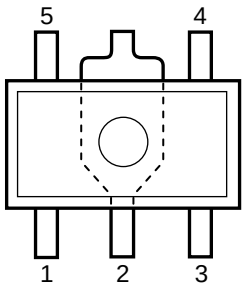

● **HSON-6**

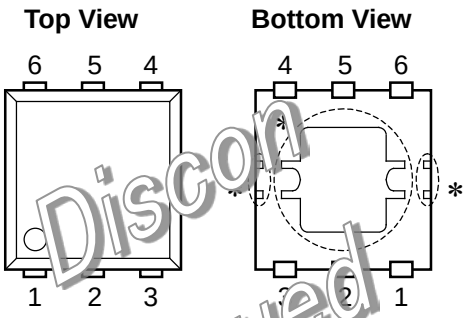

Discontinued

PIN DESCRIPTIONS

● **SOT-89-5**

Pin No.	Symbol	Description
1	V_{OUT}	Voltage Regulator Output Pin
2	V_{DD}	Input Pin
3	GND	Ground Pin
4	NC (A/B type)	No Connection
	ADJ (C type)	Adjustable Regulator feedback Input Pin (Connect to resistor voltage divider.)
5	$\overline{CE}$ (A type)or CE(B/D type)	Chip Enable Pin

● **HSON-6 (Discontinued)**

Pin No.	Symbol	Description
1	V_{DD}	Input Pin
2	GND	Ground Pin
3	NC (A/B type)	No Connection
	ADJ (C type)	Adjustable Regulator feedback Input Pin (Connect to resistor voltage divider.)
4	NC	No Connection
5	$\overline{CE}$ (A type)or CE(B/D type)	Chip Enable Pin
6	V_{OUT}	Voltage Regulator Output Pin

*) Tab and tab suspension leads are V_{DD} level. (They are connected to the reverse side of the IC.)
The tab is better to be connected to the V_{DD}, but leaving it open is also acceptable.
The tab suspension leads should be open and do not connect to other wires or land patterns.

ABSOLUTE MAXIMUM RATINGS

Symbol	Item	Rating	Unit
V_{IN}	Input Voltage	9.0	V
V_{CE}	Input Voltage ($\overline{CE}$ or CE Input Pin)	−0.3~9.0	V
V_{ADJ}	Input Voltage (ADJ Input Pin)	−0.3~9.0	V
V_{OUT}	Output Voltage	−0.3~V_{IN}+0.3	V
I_{OUT}	Output Current	450	mA
P_D	Power Dissipation (SOT-89-5)*	900	mW
	Power Dissipation (HSON-6)* (Discontinued)	900	
Topt	Operating Temperature Range	−40~85	°C
Tstg	Storage Temperature Range	−55~125	°C

∗) For Power Dissipation, please refer to PACKAGE INFORMATION.

ABSOLUTE MAXIMUM RATINGS

Electronic and mechanical stress momentarily exceeded absolute maximum ratings may cause the permanent damages and may degrade the life time and safety for both device and system using the device in the field.
The functional operation at or over these absolute maximum ratings is not assured.

RECOMMENDED OPERATING CONDITIONS (ELECTRICAL CHARACTERISTICS)

All of electronic equipment should be designed that the mounted semiconductor devices operate within the recommended operating conditions. The semiconductor devices cannot operate normally over the recommended operating conditions, even if when they are used over such conditions by momentary electronic noise or surge. And the semiconductor devices may receive serious damage when they continue to operate over the recommended operating conditions.

ELECTRICAL CHARACTERISTICS

- **R1130xxxxA**

Topt=25°C

Symbol	Item	Conditions	Min.	Typ.	Max.	Unit
V_{IN}	Input Voltage		2.5		8.0	V
I_{SS1}	Supply Current 1	V_{IN}-V_{OUT}=1.0V,V_{IN}=GND		50	100	μA
Istandby	Standby Current	V_{IN}-V_{OUT}=1.0V,V_{IN}=V_{CE}		0.1	1.0	μA
V_{OUT}	Output Voltage	V_{IN}-V_{OUT}=1.0V 1mA ≦ I_{OUT} ≦ 80mA	V_{OUT}× 0.980	Set V_{OUT}	V_{OUT}× 1.020	V
I_{OUT1}	Output Current	Refer to the table of Input Voltage by Set Output Voltage	300			mA
$\Delta V_{OUT}/\Delta I_{OUT}$	Load Regulation	V_{IN}-V_{OUT}=1.0V 1mA ≦ I_{OUT} ≦ 80mA		40	80	mV
V_{DIF}	Dropout Voltage	I_{OUT}=100mA	Refer to the ELECTRICAL CHARACTERISTICS by OUTPUT VOLTAGE			
$\Delta V_{OUT}/\Delta V_{IN}$	Line Regulation	I_{OUT}=80mA,Set V_{OUT}>2.0V: V_{OUT}+0.5V ≦ V_{IN} ≦ 8.0V Set $_{OUT}$ ≦ 1.9V: .5V ≦ V_{IN} ≦ 8.0V		0.1	0.2	%/V
RR	Ripple Rejection	f=1kHz Ripple 0.5Vp−p I_{OUT} = 80mA Set V_{OUT} ≧ 1.8V, V_{IN}−V_{OUT} = 1.0V Set V_{OUT} ≦ 1.7, V_{IN} = 2.8V		60		dB
ΔV_{OUT}/ ΔTopt	Output Voltage Temperature Coefficient	I_{OUT} = 30mA, V_{IN}−V_{OUT} = 1.0V −40°C ≦ Topt ≦ 85°C		±100		ppm /°C
I_{SC}	Short Current Limit	Set V_{OUT} ≦ 3.9V,V_{OUT} = 0V		70		mA
		Set V_{OUT}>4.0V,V_{OUT} = 0V		50		
R_{PU}	$\overline{CE}$ Pull-up Resistance		2.5	5.0	10.0	MΩ
V_{CEH}	$\overline{CE}$ Input Voltage “H”	V_{IN}=2.5V	1.5		V_{IN}	V
V_{CEL}	$\overline{CE}$ Input Voltage “L”	V_{IN}=2.5V	0.00		0.25	V

- **R1130xxxxB**

Topt=25°C

Symbol	Item	Conditions	Min.	Typ.	Max.	Unit
V_{IN}	Input Voltage		2.5		8.0	V
I_{SS1}	Supply Current 1	V_{IN}-V_{OUT}=1.0V, V_{IN}=V_{CE}		50	100	μA
Istandby	Standby Current	V_{IN}-V_{OUT}=1.0V, V_{IN}=GND		0.1		μA
V_{OUT}	Output Voltage	V_{IN}-V_{OUT}=1.0V 1mA ≦ I_{OUT} ≦ 80mA	V_{OUT}× 0.980	Set V_{OUT}	V_{OUT}× 1.020	V
I_{OUT1}	Output Current	Refer to the table of Input Voltage by Set Output Voltage	300			mA
$\Delta V_{OUT}/\Delta I_{OUT}$	Load Regulation	V_{IN}-V_{OUT}=1.0V 1mA ≦ I_{OUT} ≦ 80mA		40	80	mV
V_{DIF}	Dropout Voltage	I_{OUT}=100mA	Refer to the Table of Dropout Voltage by Set Output Voltage			
$\Delta V_{OUT}/\Delta V_{IN}$	Line Regulation	I_{OUT}=80mA, Set V_{OUT}>2.0V: V_{OUT}+0.5V ≦ V_{IN} ≦ 8.0V Set V_{OUT} ≦ 1.9V: 2.5V ≦ V_{IN} ≦ 8.0V		0.1	0.2	%/V
RR	Ripple Rejection	f=1kHz Ripple 0.5Vp–p I_{OUT} = 80mA Set V_{OUT} ≧ 1.8V, V_{IN}–V_{OUT} = 1.0V Set V_{OUT} ≦ 1.7, V_{IN} = 2.8V		60		dB
ΔV_{OUT}/ ΔTopt	Output Voltage Temperature Coefficient	I_{OUT} = 10mA, V_{IN}–V_{OUT} = 1.0V –40°C ≦ Topt ≦ 85°C		±100		ppm /°C
I_{SC}	Short Current Limit	Set V_{OUT} ≦ 3.9V,V_{OUT} = 0V		70		mA
		Set V_{OUT} ≧ 4.0V,V_{OUT} = 0V		50		
R_{PU}	Pull-down Resistance for CE pin		2.5	5.0	10.0	MΩ
V_{CEH}	CE Input Voltage “H”	V_{IN}=2.5V	1.5		V_{IN}	V
V_{CEL}	CE Input Voltage “L”	V_{IN}=2.5V	0.00		0.25	V

- **Dropout Voltage by Set Output Voltage**

Topt = 25°C

Output Voltage V_{OUT} (V)	Dropout Voltage V_{DIF} (V)	
	Typ.	Max.
V_{OUT} = 1.5	1.00	1.05
V_{OUT} = 1.6	0.90	0.95
V_{OUT} = 1.7	0.80	0.85
V_{OUT} = 1.8	0.70	0.75
V_{OUT} = 1.9	0.60	0.65
V_{OUT} = 2.0	0.50	0.60
V_{OUT} = 2.1	0.40	0.55
2.2 ≦ V_{OUT} ≦ 2.5	0.30	0.49
2.6 ≦ V_{OUT} ≦ 3.3	0.25	0.34
3.4 ≦ V_{OUT} ≦ 5.0	0.20	0.28

Dropout Voltage by Set Output Voltage

Topt = 25°C

Output Voltage V_{OUT} (V)	Input Voltage (V)
1.5 ≦ V_{OUT} ≦ 1.9	V_{IN}=V_{OUT}+1.5V
2.0 ≦ V_{OUT} ≦ 2.7	V_{IN}=V_{OUT}+1.3V
2.8 ≦ V_{OUT} ≦ 5.0	V_{IN}=V_{OUT}+1.0V

- **R1130xxxxC**

Topt=25°C

Symbol	Item	Conditions	Min.	Typ.	Max.	Unit
V_{IN}	Input Voltage		2.5		8.0	V
I_{SS1}	Supply Current	V_{IN}-V_{OUT}=1.0V, V_{IN}=V_{CE}		50	100	μA
Istandby	Standby Current	V_{IN}-V_{OUT}=1.0V, V_{IN}=GND		0.1	1.0	μA
V_{OUT}	Reference Voltage for Adjustable Voltage Regulator	V_{OUT}=V_{ADJ},V_{IN}-V_{OUT}=1.0V I_{OUT}=80mA	1.764	1.800	1.836	V
I_{OUT1}	Output Current	V_{OUT}=V_{ADJ}, V_{IN}-V_{OUT}=1.5V	300			mA
$\Delta V_{OUT}/\Delta I_{OUT}$	Load Regulation	V_{IN}=2.5V, V_{OUT}=V_{ADJ} 1mA ≦ I_{OUT} ≦ 80mA		40	80	mV
V_{DIF}	Dropout Voltage	I_{OUT}=100mA, V_{OUT}=V_{ADJ}		0.1	0.2	V
$\Delta V_{OUT}/\Delta V_{IN}$	Line Regulation	I_{OUT}=80mA, V_{OUT}=V_{ADJ} 2.5V ≦ V_{IN} ≦ 8.0V		0.1	0.2	%/V
RR	Ripple Rejection	f=1kHz Ripple 0.5Vp−p I_{OUT} = 80mA,V_{IN}−V_{OUT} = 1.0V V_{OUT}=V_{ADJ},I_{OUT}=80mA		60		dB
ΔV_{OUT}/ ΔTopt	Output Voltage Temperature Coefficient	I_{OUT} = 10mA, V_{IN}−V_{OUT} = 1.0V −40°C ≦ Topt ≦ 85°C		±100		ppm /°C
I_{SC}	Short Current Limit	V_{OUT} = 0V		70		mA
R_{PU}	Pull-down Resistance for CE pin		2.5	5.0	10.0	MΩ
V_{CEH}	CE Input Voltage “H”	V_{IN}=2.5V	1.5		V_{IN}	V
V_{CEL}	CE Input Voltage “L”	V_{IN}=2.5V	0.00		0.25	V

TEST CIRCUITS (Pin number is applied to R1130H Series)

- **R1130HxxxA**

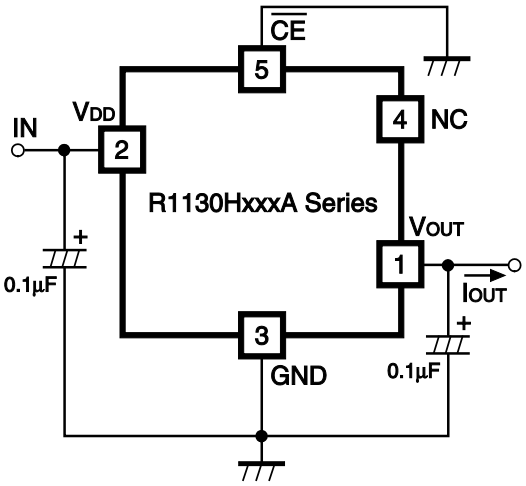

Fig.1 Standard test Circuit

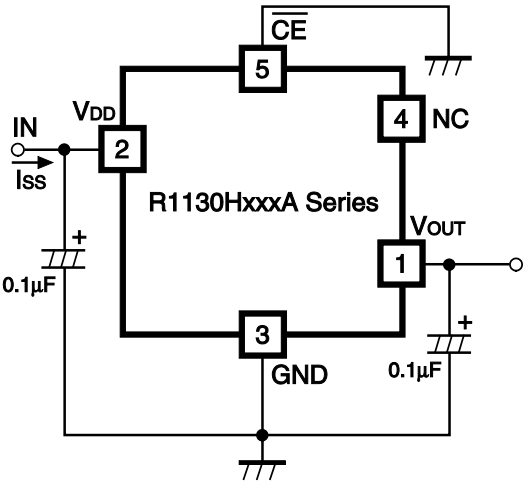

Fig.2 Supply Current Test Circuit

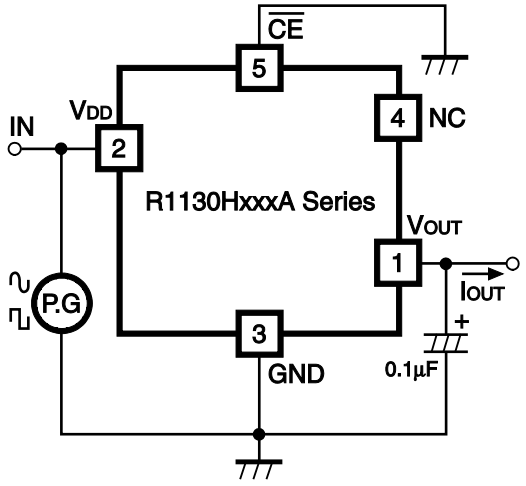

Fig.3 Ripple Rejection, Line Transient Response Test Circuit

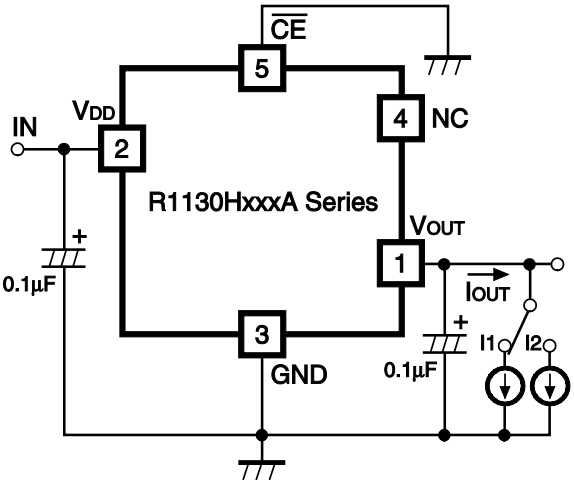

Fig.4 Load Transient Response Test Circuit

- **R1130HxxxB**

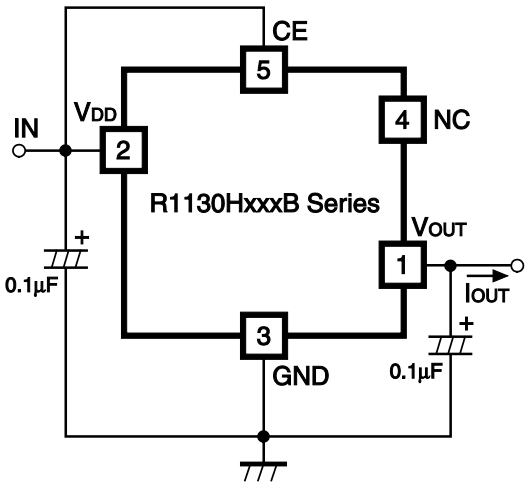

Fig.1 Standard test Circuit

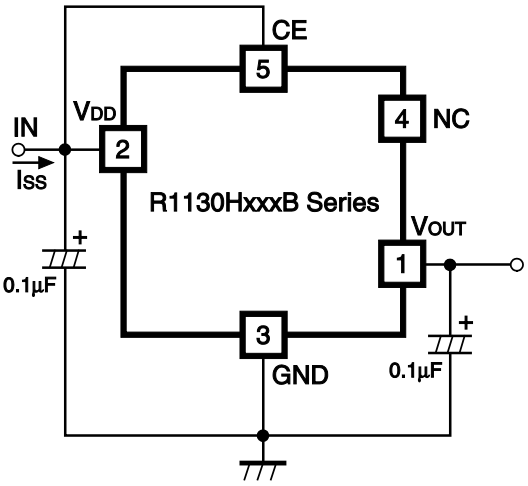

Fig.2 Supply Current Test Circuit

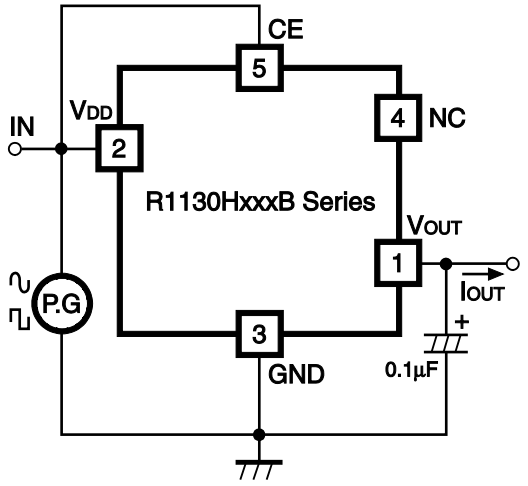

Fig.3 Test Circuit for Ripple Rejection and Input Transient Response

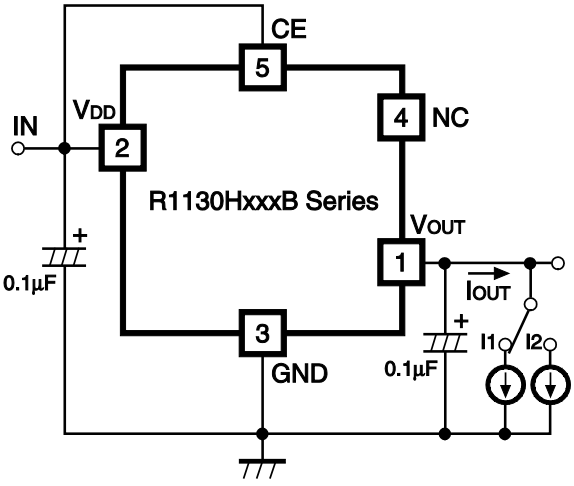

Fig.4 Test Circuit for Load Transient Response

- **R1130H001C**

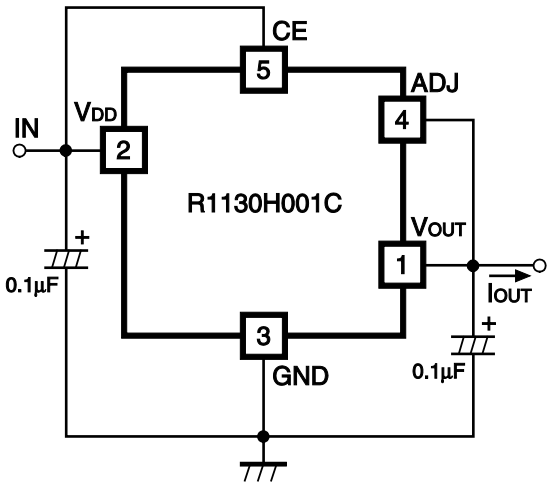

Fig.1 Standard test Circuit

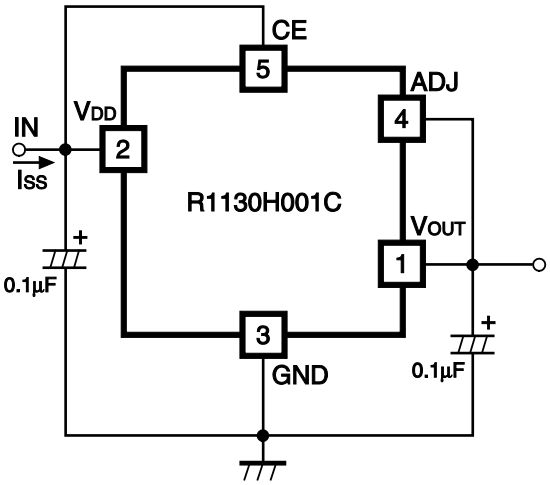

Fig.2 Test Circuit Supply Current

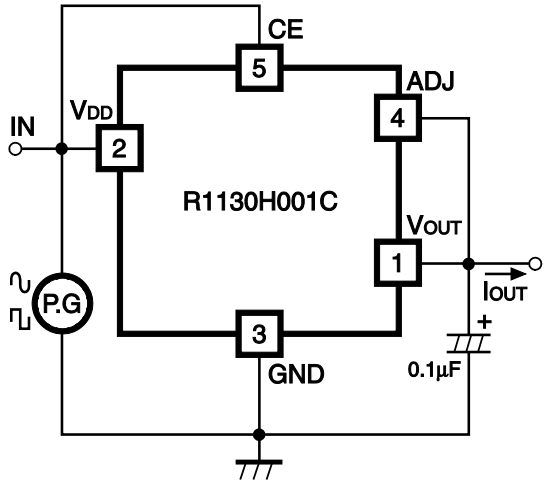

Fig.3 Test Circuit for Ripple Rejection and Input Transient Response

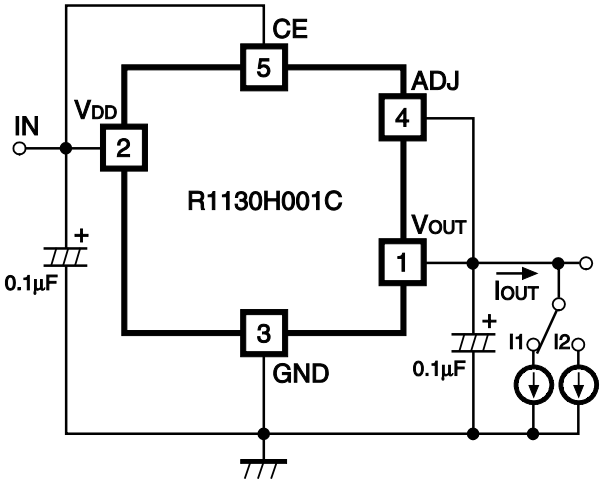

Fig.4 Test Circuit for Load Transient Response

TYPICAL CHARACTERISTICS

1) Output Voltage vs. Output Current (Topt=25°C)

R1130x151B

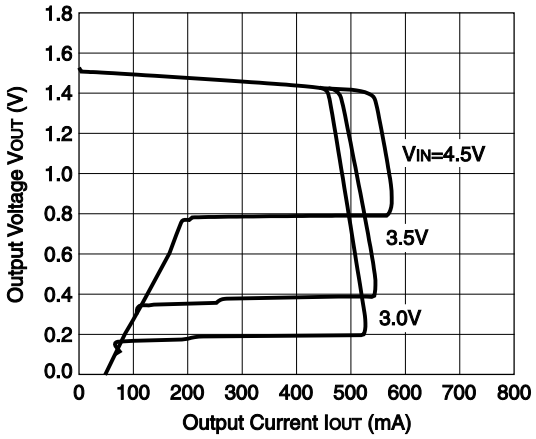

R1130x331B

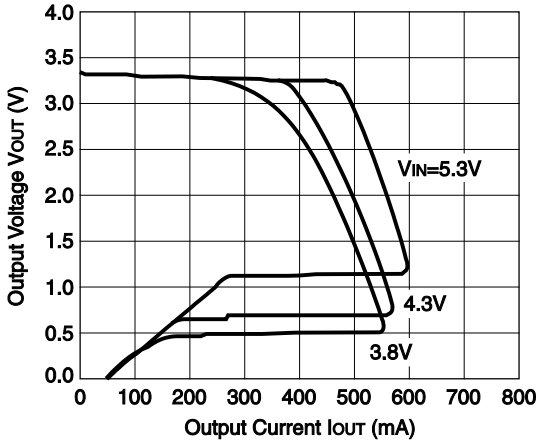

R1130x501B

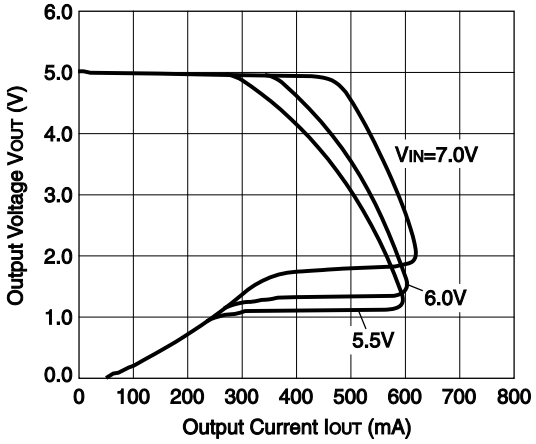

2) Input Voltage vs. Output Voltage (Topt=25°C)

R1130x151B

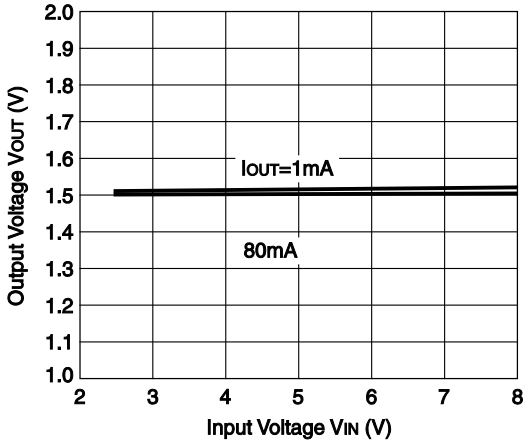

R1130x331B

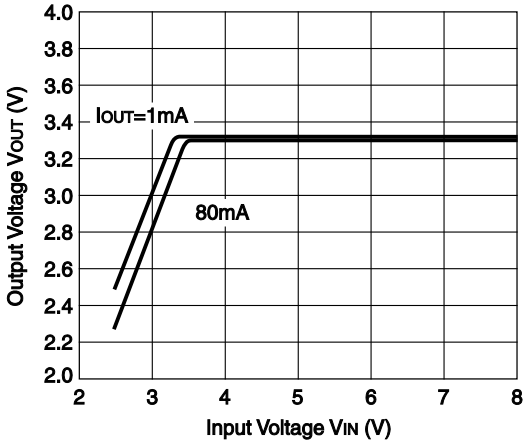

R1130x501B

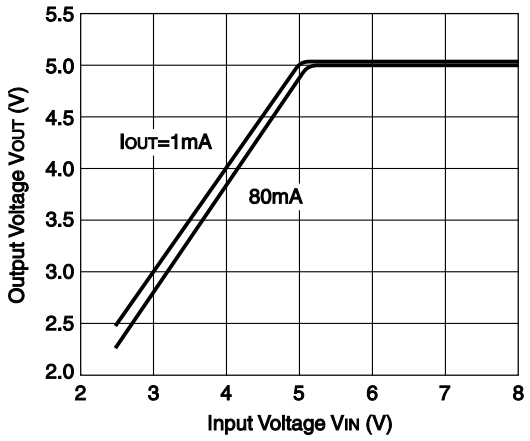

3) Dropout Voltage vs. Output Current

R1130x151B

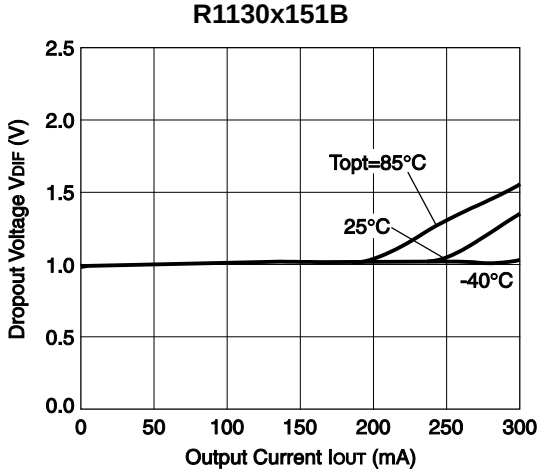

R1130x331B

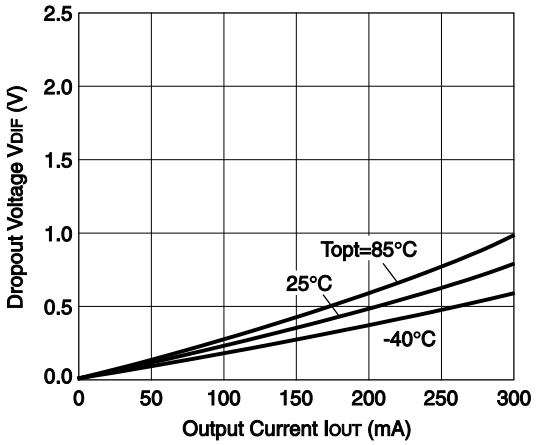

R1130x501B

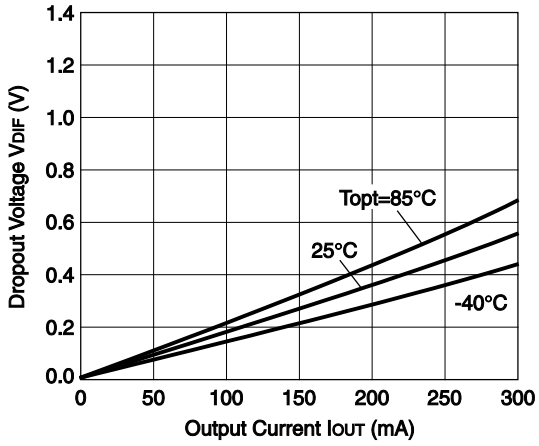

4) Output Voltage vs. Temperature

R1130x151B

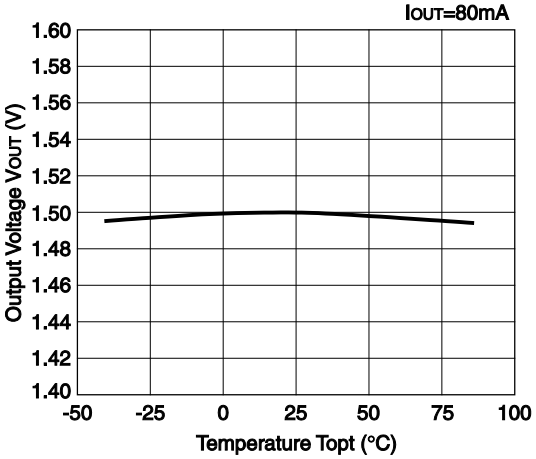

R1130x331B

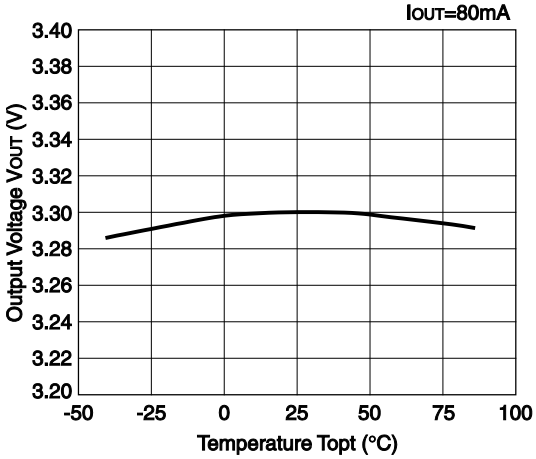

R1130x501B

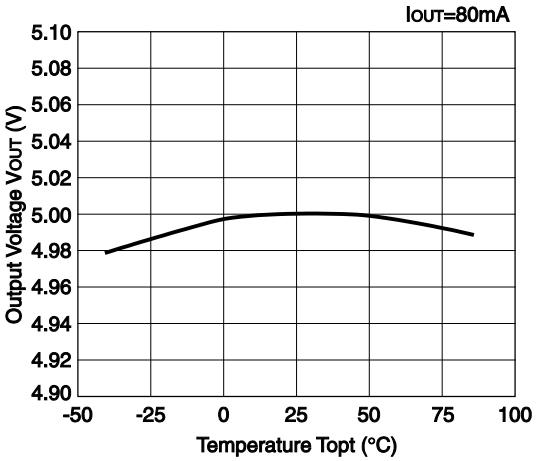

5) Supply Current vs. Input Voltage (Topt=25°C)

R1130x151B

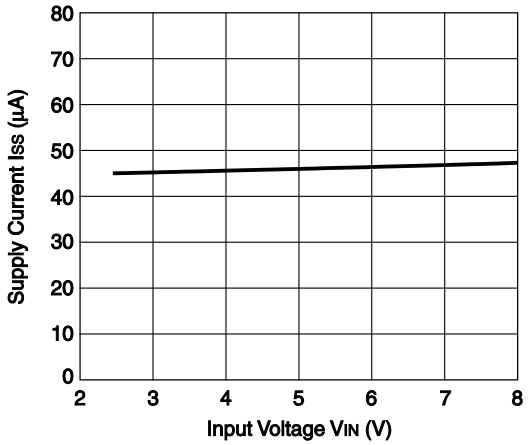

R1130x331B

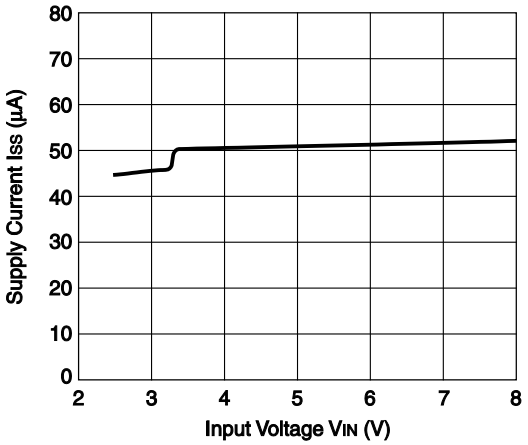

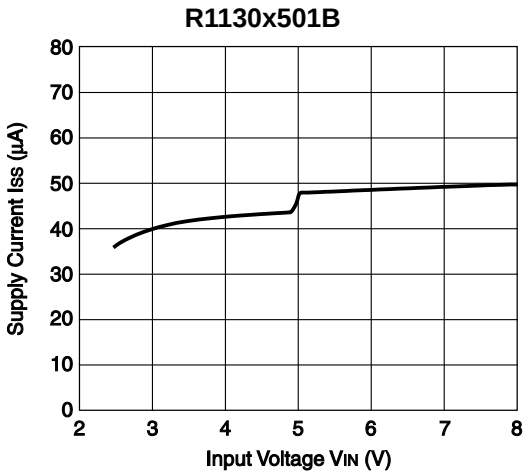

6) Supply Current vs. Temperature

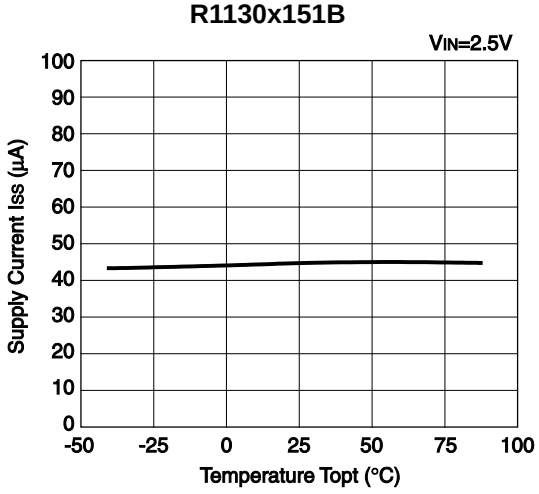

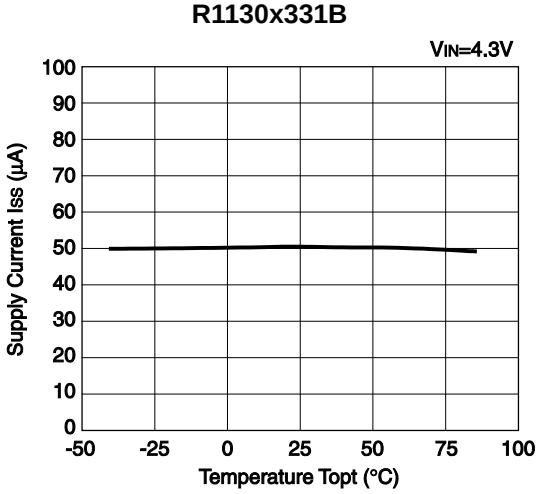

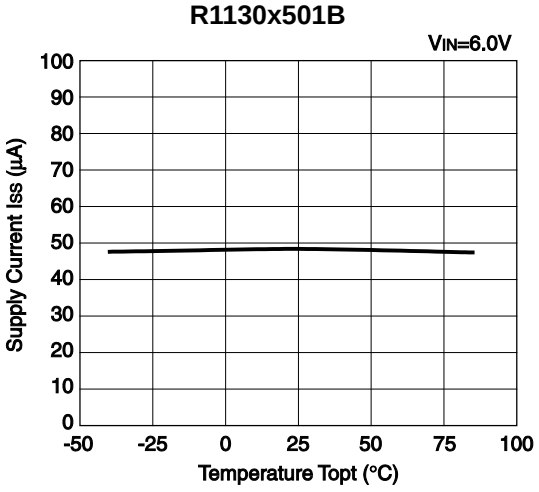

7) Ripple Rejection vs. Frequency

R1130x151B

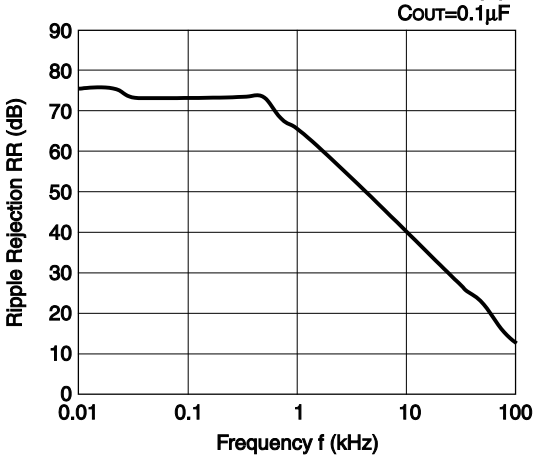

R1130x331B

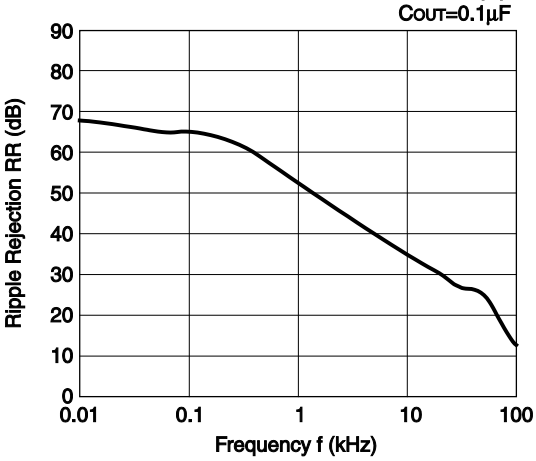

R1130x501B

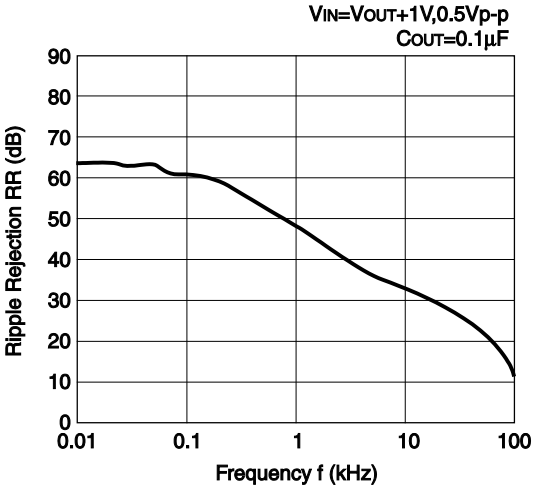

8) Ripple Rejection vs. Input Voltage

R1130x151B

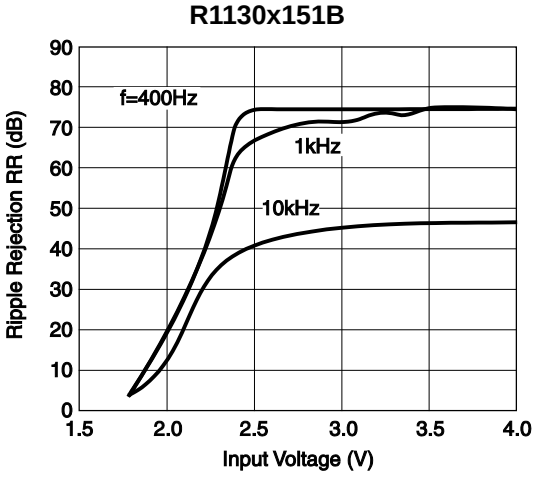

R1130x331B

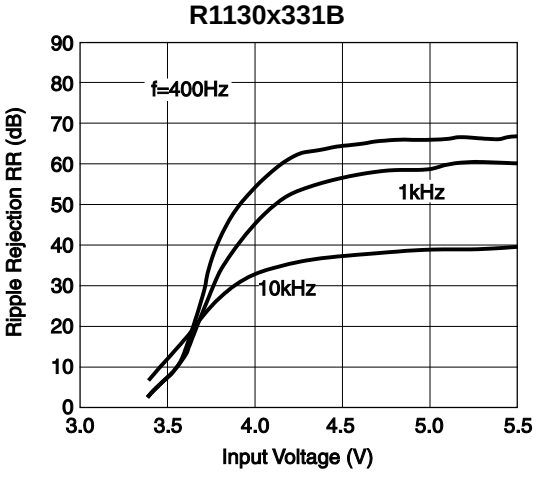

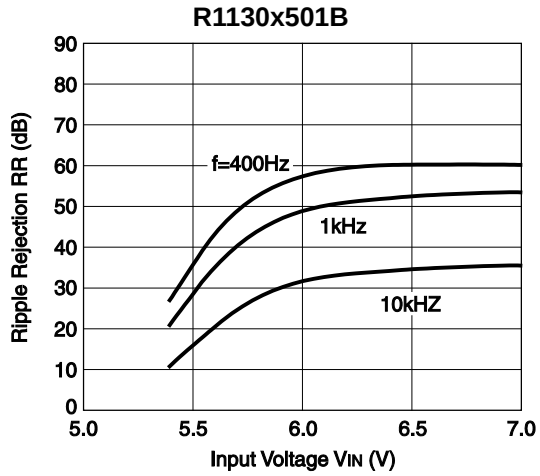

9) Input Transient Response

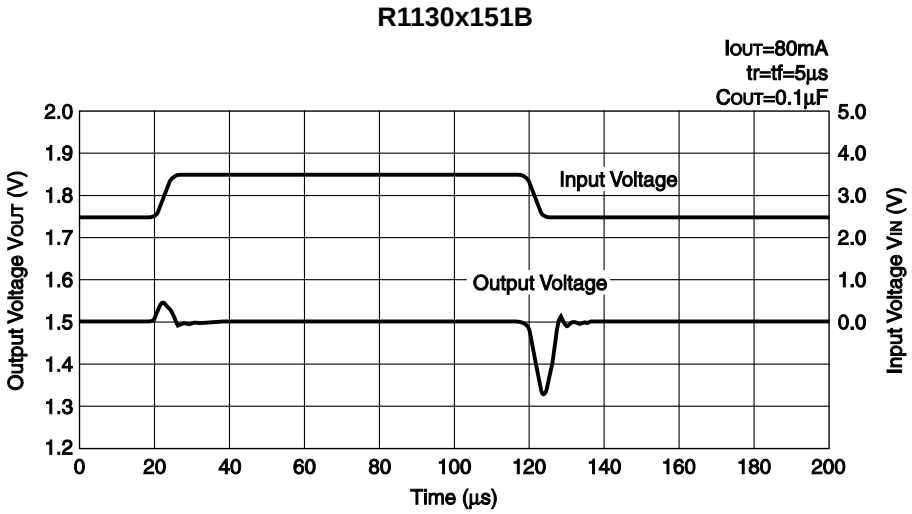

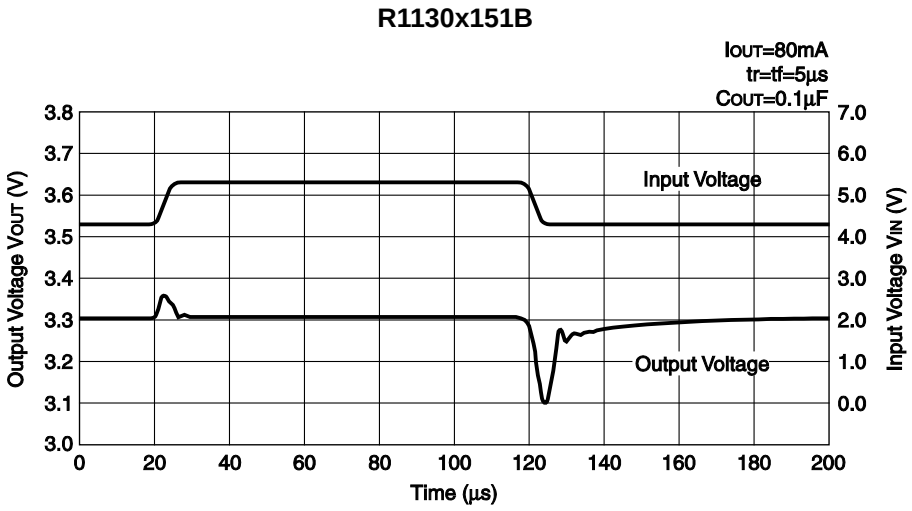

R1130x501B

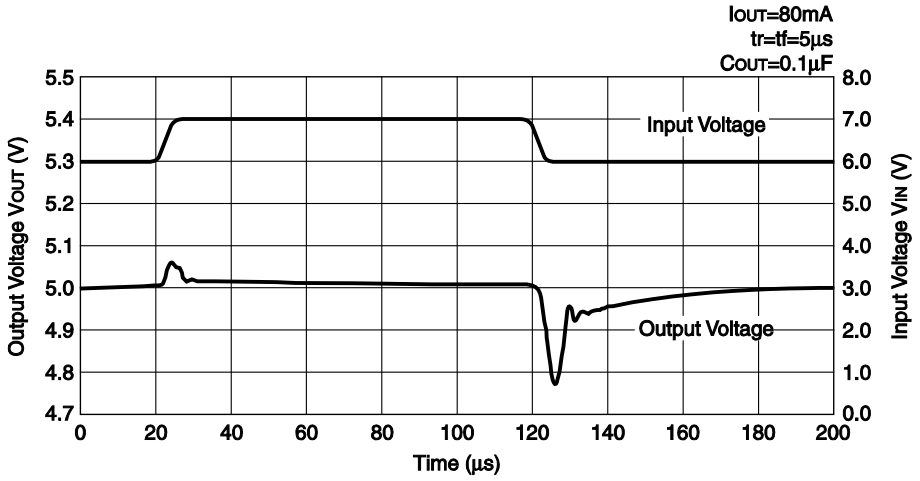

10) Load Transient Response

R1130x151B

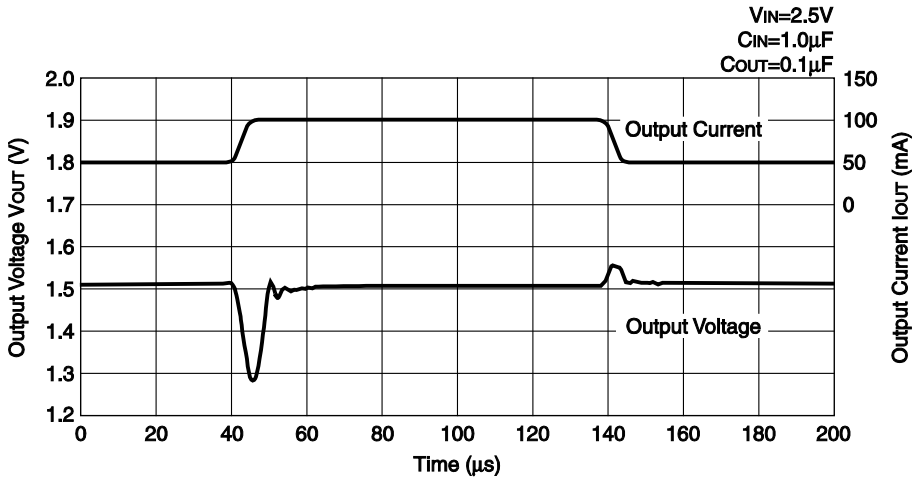

R1130x331B

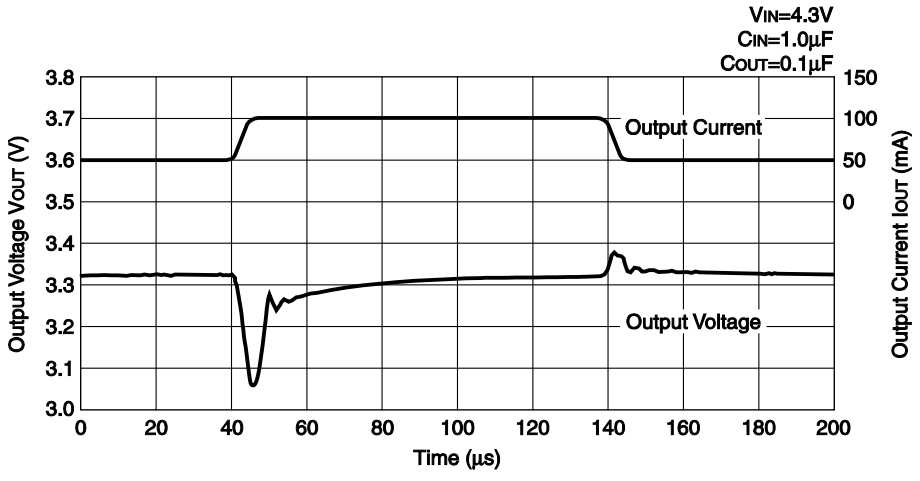

R1130x501B

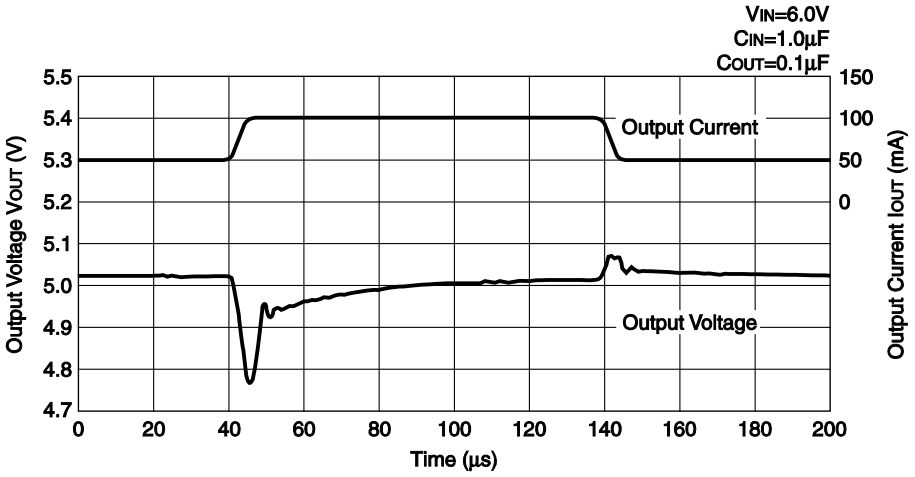
VIN=6.0V
CIN=1.0µF
COUT=0.1µF
Output Current
Output Voltage
Output Voltage VOUT (V)
Output Current IOUT (mA)
Time (µs)
5.5
5.4
5.3
5.2
5.1
5.0
4.9
4.8
4.7
150
100
50
0
0
20
40
60
80
100
120
140
160
180
200

APPENDIX

* Technical Notes on Output Voltage Setting of C type

Figure 1. Adjustable Regulator (C type)

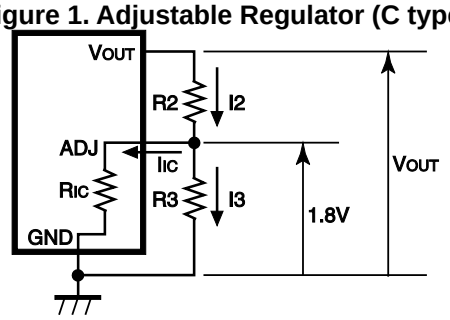

The Output Voltage of Regulator in R1130xxxxC may be adjustable for any output voltage between its 1.8V reference and its V_{DD} setting level. An external pair of resistors is required, as shown in Figure 1.

The complete equation for the output voltage is described step by step as follows;

$$I2=I_{IC}+I3 \quad \cdots\cdots (1)$$

$$I3=1.8/R3 \quad \cdots\cdots (2)$$

Thus,

$$I2=I_{IC}+1.8/R3 \quad \cdots\cdots (3)$$

Therefore,

$$V_{OUT}=1.8+R2\times I2 \quad \cdots\cdots (4)$$

Put Equation (3) into Equation (4), then

$$V_{OUT}=1.8+R2\times(I_{IC}+1.8/R3)$$

$$=1.8\times(1+R2/R3)+R2\times I_{IC} \quad \cdots\cdots (5)$$

In 2nd term, or $R2\times I_{IC}$ will produce an error in V_{OUT}.

In Equation (5),

$$I_{IC}=1.8/R_{IC} \quad \cdots\cdots (6)$$

$$R2\times I_{IC}=R2\times 1.8/R_{IC}$$

$$=1.8\times R2/R_{IC} \quad \cdots\cdots (7)$$

For better accuracy, choosing R2 ($<<R_{IC}$) reduces this error.

* Adjustable Resistor Dependence of Output Voltage

R1130x001C

R3=10kΩ, Topt=25°C

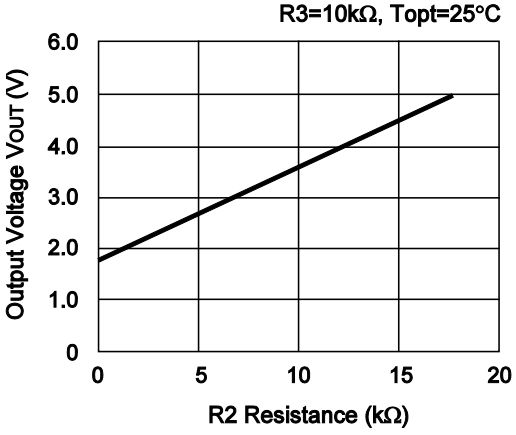

R1130x001C

R3=100kΩ, Topt=25°C

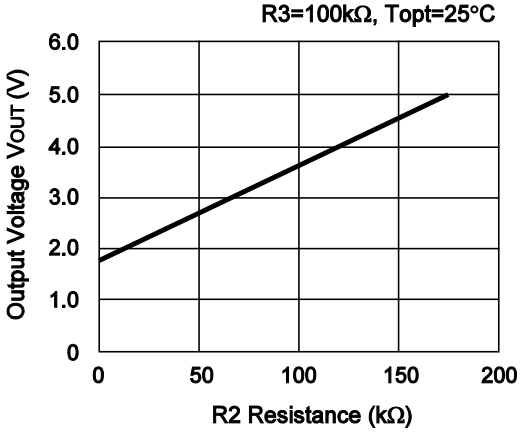

TYPICAL APPPLICATION

R1130xxxxA

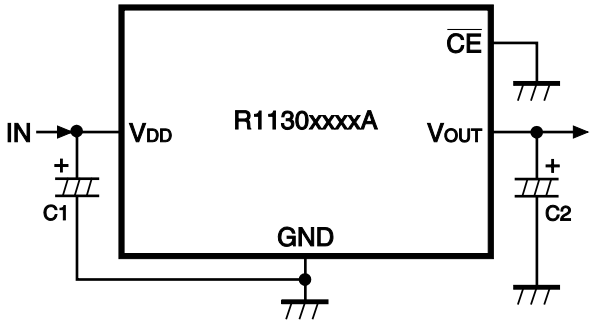

C1=C2=0.1µF

R1130xxxxB

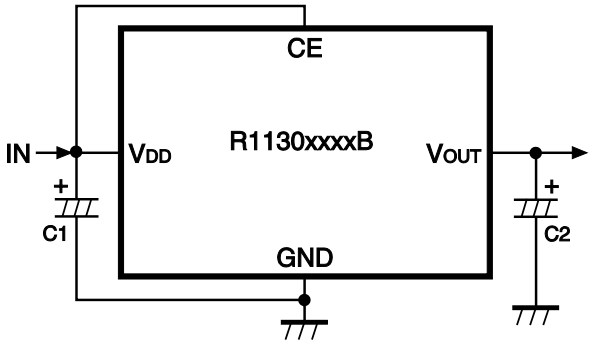

C1=C2=0.1µF

R1130xxxxC

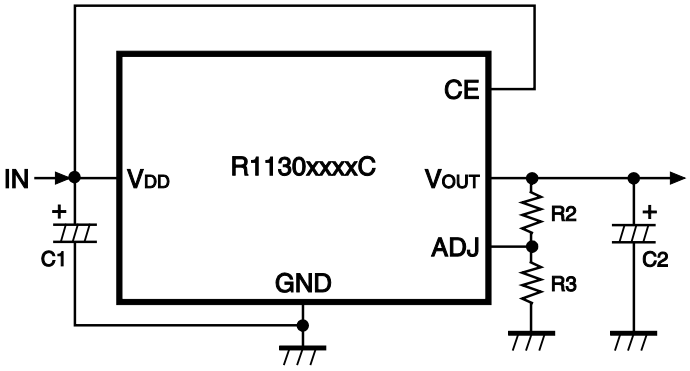

C1=C2=0.1µF, R2, R3: Refer to the Technical Notes on Output Voltage setting of C type.

1. The products and the product specifications described in this document are subject to change or discontinuation of production without notice for reasons such as improvement. Therefore, before deciding to use the products, please refer to our sales representatives for the latest information thereon.
2. The materials in this document may not be copied or otherwise reproduced in whole or in part without prior written consent of our company.
3. Please be sure to take any necessary formalities under relevant laws or regulations before exporting or otherwise taking out of your country the products or the technical information described herein.
4. The technical information described in this document shows typical characteristics of and example application circuits for the products. The release of such information is not to be construed as a warranty of or a grant of license under our company's or any third party's intellectual property rights or any other rights.
5. The products listed in this document are intended and designed for use as general electronic components in standard applications (office equipment, telecommunication equipment, measuring instruments, consumer electronic products, amusement equipment etc.). Those customers intending to use a product in an application requiring extreme quality and reliability, for example, in a highly specific application where the failure or misoperation of the product could result in human injury or death (aircraft, spacevehicle, nuclear reactor control system, traffic control system, automotive and transportation equipment, combustion equipment, safety devices, life support system etc.) should first contact us.
6. We are making our continuous effort to improve the quality and reliability of our products, but semiconductor products are likely to fail with certain probability. In order to prevent any injury to persons or damages to property resulting from such failure, customers should be careful enough to incorporate safety measures in their design, such as redundancy feature, fire containment feature and fail-safe feature. We do not assume any liability or responsibility for any loss or damage arising from misuse or inappropriate use of the products.
7. Anti-radiation design is not implemented in the products described in this document.
8. The X-ray exposure can influence functions and characteristics of the products. Confirm the product functions and characteristics in the evaluation stage.
9. WLCSP products should be used in light shielded environments. The light exposure can influence functions and characteristics of the products under operation or storage.
10. There can be variation in the marking when different AOI (Automated Optical Inspection) equipment is used. In the case of recognizing the marking characteristic with AOI, please contact our sales or our distributor before attempting to use AOI.
11. Please contact our sales representatives should you have any questions or comments concerning the products or the technical information.

NISSHINBO

Nisshinbo Micro Devices Inc.

Official website
https://www.nisshinbo-microdevices.co.jp/en/
Purchase information
https://www.nisshinbo-microdevices.co.jp/en/buy/

ENTEGRECİ

Bu belge www.entegreci.com üzerinden sunulmaktadır.

Elektronik komponent tedarikinde Entegreci

Entegreci, Eskişehir merkezli, Türkiye geneline satış yapan bir elektronik komponent mağazasıdır. Entegreler (IC), mikrodenetleyiciler, transistörler, diyotlar, pasif elemanlar, konnektörler, modüller ve geliştirme kartları tek adetten seri üretim adetlerine kadar satılır. Ürün sayfalarında güncel stok durumunu, fiyatı ve datasheet bağlantısını bulabilirsiniz.

Parça koduyla arama

Üretici parça numarasını yazın; stok ve fiyatı hemen görün.

www.entegreci.com

Ürün kategorileri

Entegreden kapasitöre tüm elektronik komponent kategorileri.

Kategorilere göz atın

Üreticiler

Aradığınız üreticinin ürünlerini tek sayfada inceleyin.

Üreticileri görün

Toplu alım ve teklif

Listede olmayan ya da yüksek adetli parçalar için teklif isteyin.

Teklif isteyin

www.entegreci.com | **destek@entegreci.com** | **0850 305 90 34**

Entegreci is an online electronic components store based in Türkiye. Search by manufacturer part number to see stock, prices and datasheets for integrated circuits, microcontrollers, transistors, passive components and connectors, or request a quote for parts that are not listed.

Bu sayfa Entegreci tarafından eklenmiştir. Belgenin önceki sayfaları asıl yayıncısına aittir ve içeriği değiştirilmemiştir; en güncel sürüm için belgenin yayıncısına başvurun.