NISSHINBO

R1131x SERIES

Low Voltage 300mA LDO REGULATOR

NO.EA-116-130530

OUTLINE

The R1131x Series are CMOS-based low voltage regulator ICs with output voltage range from 0.8V to 3.3V. The minimum operating voltage is 1.4V. Each of these voltage regulator ICs consists of a voltage reference unit, an error amplifier, resistors for setting output voltage, a current limit circuit, and a chip enable circuit.

To prevent the destruction by over current, current limit circuit is included. Standby mode realizes ultra small consumption current.

The output voltage of these ICs is internally fixed with high accuracy. Since the packages for these ICs are SOT-23-5, SON-6, and HSON-6, high density mounting of the ICs on boards is possible.

FEATURES

- Supply Current ..... Typ. 80μA (V_{OUT} < 1.8V)
  Typ. 60μA (V_{OUT} ≥ 1.8V)
- Standby Mode ..... Typ. 0.1μA
- Dropout Voltage ..... Typ. 0.48V(I_{OUT}=300mA Output Voltage=1.0V Type)
  Typ. 0.31V(I_{OUT}=300mA Output Voltage=1.5V Type)
  Typ. 0.23V(I_{OUT}=300mA Output Voltage=3.0V Type)
- Ripple Rejection ..... Typ. 65dB(f=1kHz)
- Temperature-Drift Coefficient of Output Voltage ..... Typ. ±100ppm/°C
- Line Regulation ..... Typ. 0.01%/V
- Output Voltage Accuracy ..... ±2.0%
- Output Voltage Range ..... 0.8V to 3.3V (0.1V steps)
  (For other voltages, please refer to MARK INFORMATIONS.)
- Input Voltage Range ..... 1.4V to 6.0V
- Packages SOT-23-5, SON-6, HSON-6
- Built-in fold-back protection circuit ..... Typ. 50mA (Current at short mode)
- External Capacitors ..... C_{IN}=C_{OUT}=Tantalum 1.0μF (V_{OUT} < 1.0V)
  C_{IN}=C_{OUT}=Ceramic 1.0μF (V_{OUT} ≥ 1.0V)

APPLICATIONS

- Precision Voltage References.
- Power source for electrical appliances such as cameras, VCRs and hand-held communication equipment.
- Power source for battery-powered equipment.

BLOCK DIAGRAM

R1131xxxxA

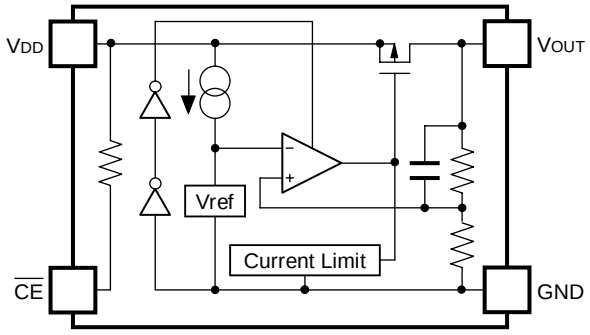

R1131xxxxB

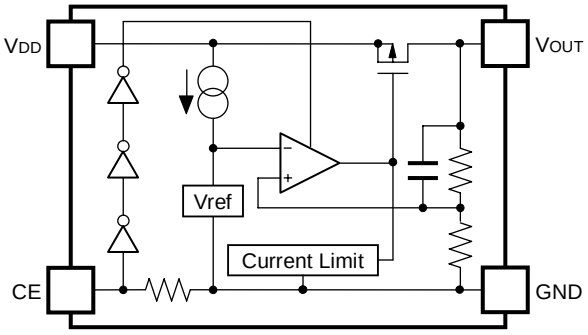

R1131xxxxD

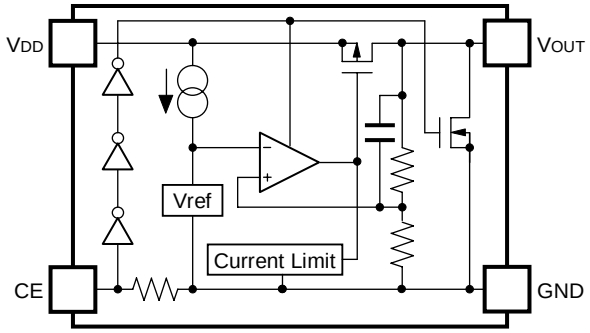

SELECTION GUIDE

The output voltage, CE pin polarity, auto discharge function, package, etc. for the ICs can be selected at the user's request.

Product Name	Package	Quantity per Reel	Pb Free	Halogen Free
R1131Nxx1∗-TR-FE	SOT-23-5	3,000 pcs	Yes	Yes
R1131Dxx1∗-TR-FE	SON-6	3,000 pcs	Yes	Yes
R1131Dxx2∗-TR-FE	HSON-6	3,000 pcs	Yes	Yes

xx: The output voltage can be designated in the range from 0.8V(08) to 3.3V(33) in 0.1V steps.
(For other voltages, please refer to MARK INFORMATIONS.)

∗ : CE pin polarity and auto discharge function at off state are options as follows.
(A) "L" active, without auto discharge function at off state
(B) "H" active, without auto discharge function at off state
(D) "H" active, with auto discharge function at off state

PIN CONFIGURATIONS

● SOT-23-5

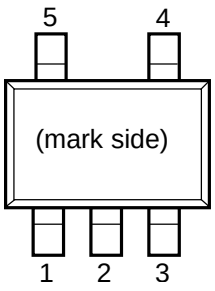

● SON-6

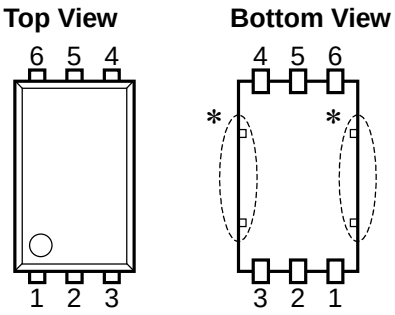

● HSON-6

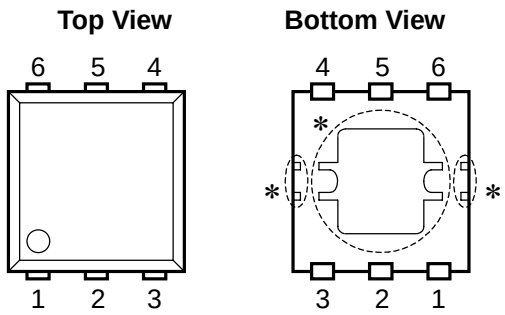

PIN DESCRIPTIONS

● **SOT-23-5**

Pin No	Symbol	Pin Description
1	V_{DD}	Input Pin
2	GND	Ground Pin
3	$\overline{CE}$ or CE	Chip Enable Pin
4	NC	No Connection
5	V_{OUT}	Output pin

● **SON-6, HSON-6**

Pin No	Symbol	Pin Description
1	V_{DD}	Input Pin
2	NC	No Connection
3	V_{OUT}	Output pin
4	NC	No Connection
5	GND	Ground Pin
6	$\overline{CE}$ or CE	Chip Enable Pin

∗) Tab and tab suspension leads are GND level. (They are connected to the reverse side of this IC.)
The tab is better to be connected to the GND, but leaving it open is also acceptable.
The tab suspension leads do not be connect to other wires or land patterns.

ABSOLUTE MAXIMUM RATINGS

Symbol	Item	Rating	Unit
V_{IN}	Input Voltage	6.5	V
V_{CE}	Input Voltage($\overline{CE}$ /CE Pin)	–0.3 to 6.5	V
V_{OUT}	Output Voltage	–0.3 to V_{IN}+0.3	V
I_{OUT}	Output Current	350	mA
P_D	Power Dissipation (SOT-23-5)*	420	mW
	Power Dissipation (SON-6) *	500	
	Power Dissipation (HSON-6) *	900	
Topt	Operating Temperature Range	–40 to 85	°C
Tstg	Storage Temperature Range	–55 to 125	°C

∗) For Power Dissipation please refer to PACKAGE INFORMATION.

ABSOLUTE MAXIMUM RATINGS

Electronic and mechanical stress momentarily exceeded absolute maximum ratings may cause the permanent damages and may degrade the life time and safety for both device and system using the device in the field.
The functional operation at or over these absolute maximum ratings is not assured.

ELECTRICAL CHARACTERISTICS

- **R1131xxxxA**

Topt=25°C

Symbol	Item	Conditions		Min.	Typ.	Max.	Unit
V_{OUT}	Output Voltage	V_{IN}= Set V_{OUT}+1V 1μA ≤ I_{OUT} ≤ 30mA	V_{OUT} >1.5V	×0.98		×1.02	V
			V_{OUT} ≤ 1.5V	−30		+30	mV
I_{OUT}	Output Current	V_{IN} − V_{OUT}=1.0V		300			mA
ΔV_{OUT}/ ΔI_{OUT}	Load Regulation	V_{IN}=Set V_{OUT}+1V, 1mA ≤ I_{OUT} ≤ 300mA			40	70	mV
V_{DIF}	Dropout Voltage	I_{OUT}=300mA	V_{OUT}=0.8V		620	850	mV
			V_{OUT}=0.9V		550	780	
			1.0V ≤ V_{OUT} < 1.5V		480	700	
			1.5V ≤ V_{OUT} < 2.6V		310	450	
			2.6V ≤ V_{OUT} ≤ 3.3V		230	350	
I_{SS1}	Supply Current	V_{IN}=Set V_{OUT}+1V, V_{OUT} < 1.8V			80	111	μA
		V_{IN}=Set V_{OUT}+1V, V_{OUT} ≥ 1.8V			60	90	μA
Istandby	Standby Current	V_{IN}=V_{CE}=Set V_{OUT}+1V			0.1	1.0	μA
ΔV_{OUT}/ ΔV_{IN}	Line Regulation	I_{OUT}=30mA V_{OUT}+0.5V ≤ V_{IN} ≤ 6.0V (V_{OUT} > 0.9V) 1.4V ≤ V_{IN} ≤ 6.0V (V_{OUT} ≤ 0.9V)			0.01	0.15	%/V
RR	Ripple Rejection	f=1kHz, Ripple 0.2Vp-p V_{IN}=Set V_{OUT}+1V, I_{OUT}=30mA			65		dB
V_{IN}	Input Voltage			1.4		6.0	V
ΔV_{OUT}/ ΔTopt	Output Voltage Temperature Coefficient	I_{OUT}=30mA −40°C ≤ Topt ≤ 85°C			±100		ppm /°C
I_{SC}	Short Current Limit	V_{OUT}=0V			50		mA
R_{PU}	$\overline{CE}$ Pull-up Resistance			1.87	5.0	12.0	MΩ
V_{CEH}	$\overline{CE}$ Input Voltage “H”			1.0		6.0	V
V_{CEL}	$\overline{CE}$ Input Voltage “L”			0		0.3	V
en	Output Noise	BW=10Hz to 100kHz			30		μVrms

RECOMMENDED OPERATING CONDITIONS (ELECTRICAL CHARACTERISTICS)

All of electronic equipment should be designed that the mounted semiconductor devices operate within the recommended operating conditions. The semiconductor devices cannot operate normally over the recommended operating conditions, even if when they are used over such conditions by momentary electronic noise or surge. And the semiconductor devices may receive serious damage when they continue to operate over the recommended operating conditions.

- **R1131xxxxB/D**

Topt=25°C

Symbol	Item	Conditions		Min.	Typ.	Max.	Unit
V_{OUT}	Output Voltage	V_{IN}=Set V_{OUT}+1V 1μA ≤ I_{OUT} ≤ 30mA	V_{OUT} >1.5V	×0.98		×1.02	V
			V_{OUT} ≤ 1.5V	−30		+30	mV
I_{OUT}	Output Current	V_{IN}−V_{OUT}=1.0V		300			mA
ΔV_{OUT}/ ΔI_{OUT}	Load Regulation	V_{IN}=Set V_{OUT}+1V 1mA ≤ I_{OUT} ≤ 300mA			40	70	mV
V_{DIF}	Dropout Voltage	I_{OUT}=300mA	V_{OUT}=0.8V		620	850	mV
			V_{OUT}=0.9V		550	780	
			1.0V ≤ V_{OUT} < 1.5V		480	700	
			1.5V ≤ V_{OUT} < 2.6V		310	450	
			2.6V ≤ V_{OUT} ≤ 3.3V		230	350	
I_{SS1}	Supply Current	V_{IN}=Set V_{OUT}+1V, V_{OUT} < 1.8V			80	111	μA
		V_{IN}=Set V_{OUT}+1V, V_{OUT} ≥ 1.8V			60	90	μA
Istandby	Standby Current	V_{IN}=Set V_{OUT}+1V, V_{CE}=GND			0.1	1.0	μA
ΔV_{OUT}/ ΔV_{IN}	Line Regulation	I_{OUT}=30mA V_{OUT}+0.5V ≤ V_{IN} ≤ 6.0V(V_{OUT} > 0.9V) 1.4V ≤ V_{IN} ≤ 6.0V(V_{OUT} ≤ 0.9V)			0.01	0.15	%/V
RR	Ripple Rejection	f=1kHz, Ripple 0.2Vp-p V_{IN}=Set V_{OUT}+1V, I_{OUT}=30mA			65		dB
V_{IN}	Input Voltage			1.4		6.0	V
ΔV_{OUT}/ ΔTopt	Output Voltage Temperature Coefficient	I_{OUT}=30mA −40°C ≤ Topt ≤ 85°C			±100		ppm /°C
I_{SC}	Short Current Limit	V_{OUT}=0V			50		mA
R_{PD}	CE Pull-down Resistance			1.87	5.0	12.0	MΩ
V_{CEH}	CE Input Voltage “H”			1.0		6.0	V
V_{CEL}	CE Input Voltage “L”			0		0.3	V
en	Output Noise	BW=10Hz to 100kHz			30		μVrms
R_{LOW}	Nch On Resistance for auto discharge (D version only)	V_{CE}=0V			60		Ω

RECOMMENDED OPERATING CONDITIONS (ELECTRICAL CHARACTERISTICS)

All of electronic equipment should be designed that the mounted semiconductor devices operate within the recommended operating conditions. The semiconductor devices cannot operate normally over the recommended operating conditions, even if when they are used over such conditions by momentary electronic noise or surge. And the semiconductor devices may receive serious damage when they continue to operate over the recommended operating conditions.

TYPICAL APPLICATION

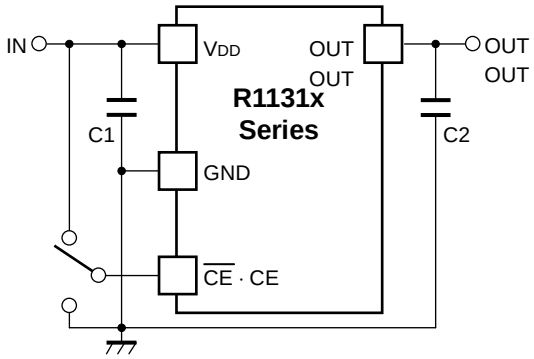

<External Components examples>

C2	1.0μF	CM05X5R105K06AB (Kyocera)
C2	1.0μF	C1005JBOJ105K (TDK)
C2	1.0μF	GRM155B30J105KE18B (Murata)

Output Capacitor; 1.0μF or more capacity ceramic Type
(If V_{OUT} < 1.0V, Tantalum Type is recommended)
Input Capacitor, 1.0μF or more capacity ceramic Type

TECHNICAL NOTES

When using these ICs, consider the following points:

Phase Compensation

In these ICs, phase compensation is made for securing stable operation even if the load current is varied. For this purpose, be sure to use a 1.0μF or more capacitor C_{OUT} with good frequency characteristics and ESR (Equivalent Series Resistance).

(Note: If a tantalum capacitor is connected to the Output pin for phase compensation, if the ESR value of the capacitor is too large, the operation might be unstable. Because of this, test these ICs with as same external components as ones to be used on the PCB.)

Chip capacitor characteristics of Bias dependence and Temperature characteristics may vary depending on its size, manufacturer, and part number.

PCB Layout

Make V_{DD} and GND lines sufficient. If their impedance is high, pick-up the noise or unstable operation may result. Connect a capacitor with as much as 1.0μF capacitor between V_{DD} and GND pin as close as possible.

Set external components, especially the output capacitor, as close as possible to the ICs, and make wiring as short as possible.

TEST CIRCUIT

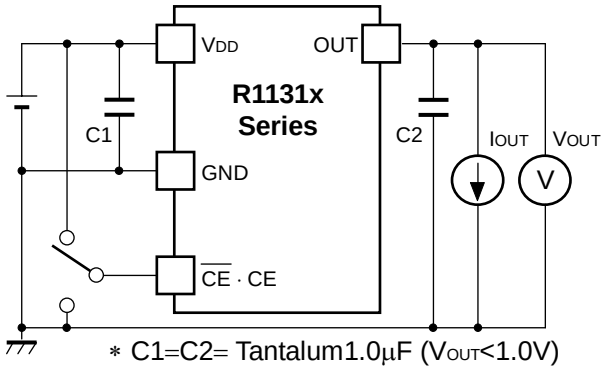

∗ C1=C2= Tantalum1.0μF (V_{OUT}<1.0V)
C1=C2=Ceramic1.0μF (V_{OUT} ≧ 1.0V)

Standard Test Circuit

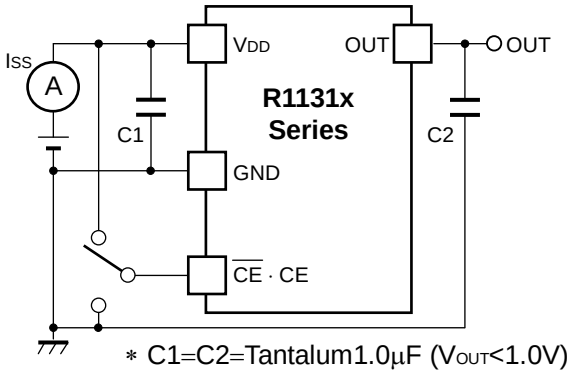

∗ C1=C2=Tantalum1.0μF (V_{OUT}<1.0V)
C1=C2=Ceramic1.0μF (V_{OUT} ≧ 1.0V)

Supply Current Test Circuit

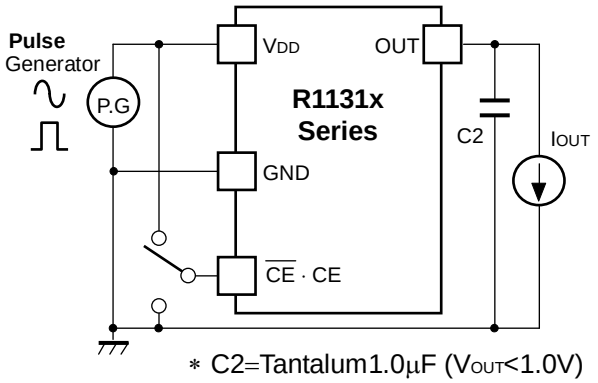

∗ C2=Tantalum1.0μF (V_{OUT}<1.0V)
C2=Ceramic1.0μF (V_{OUT} ≧ 1.0V)

Ripple Rejection, Line Transient Response Test Circuit

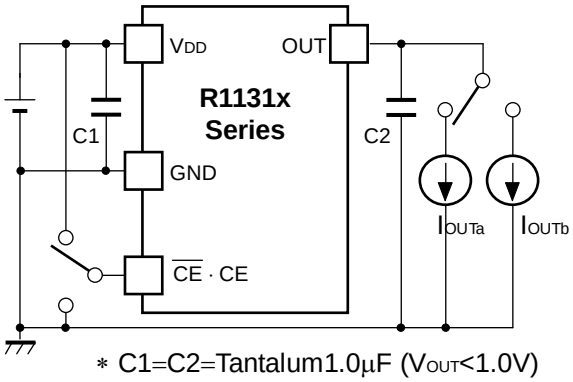

∗ C1=C2=Tantalum1.0μF (V_{OUT}<1.0V)
C1=C2=Ceramic1.0μF (V_{OUT} ≧ 1.0V)

Load Transient Response Test Circuit

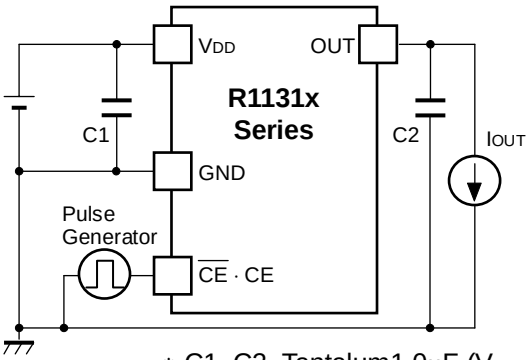

∗ Input signal waveform to CE pin is shown below.

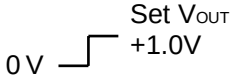

∗ C1=C2=Tantalum1.0μF (V_{OUT}<1.0V)
C1=C2=Ceramic1.0μF (V_{OUT} ≧ 1.0V)

Turn on Speed with CE pin Test Circuit

TYPICAL CHARACTERISTICS

1) Output Voltage vs. Output Current

R1131x08xx

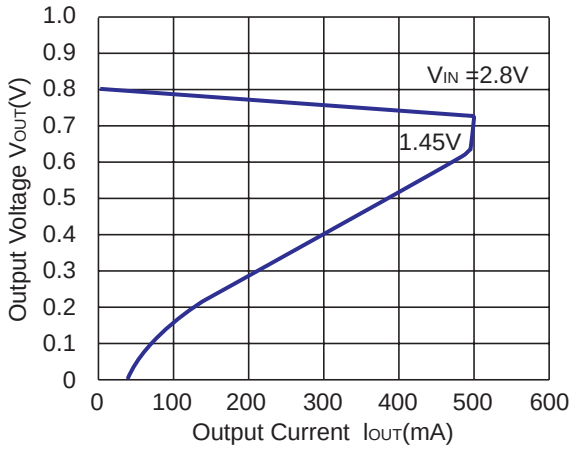

R1131x15xx

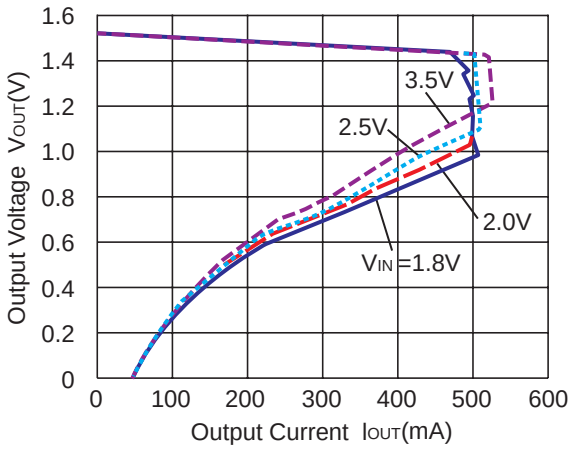

R1131x26xx

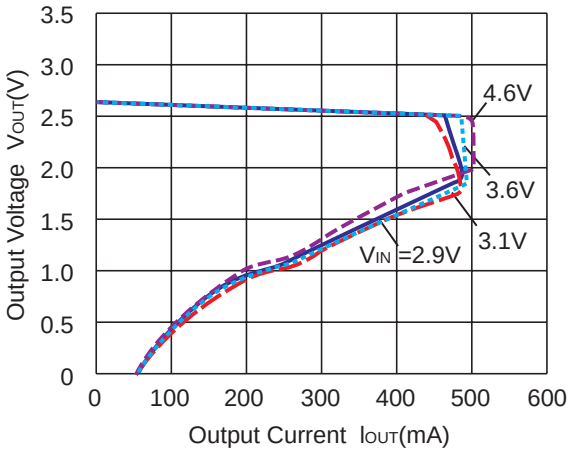

R1131x33xx

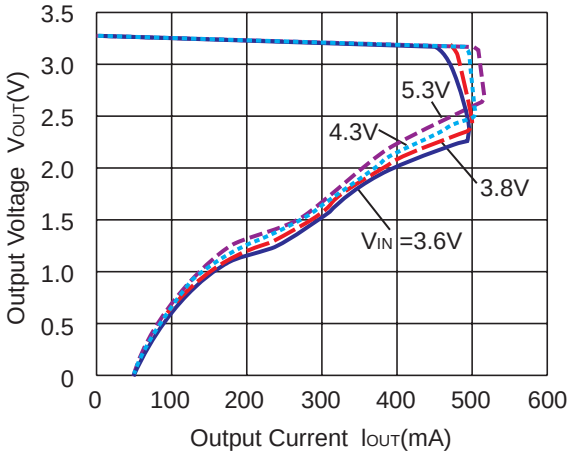

2) Output Voltage vs. Input Voltage

R1131x08xx

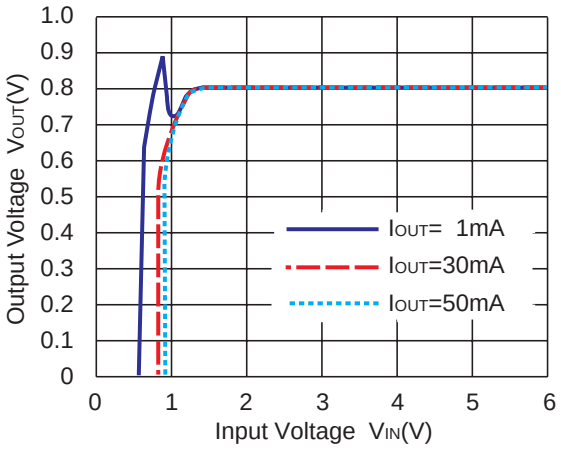

R1131x15xx

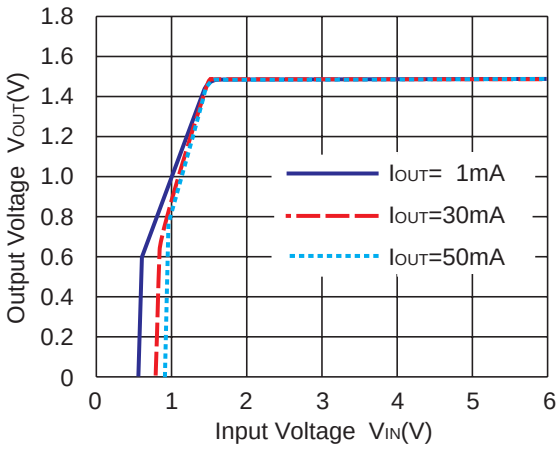

R1131x26xx

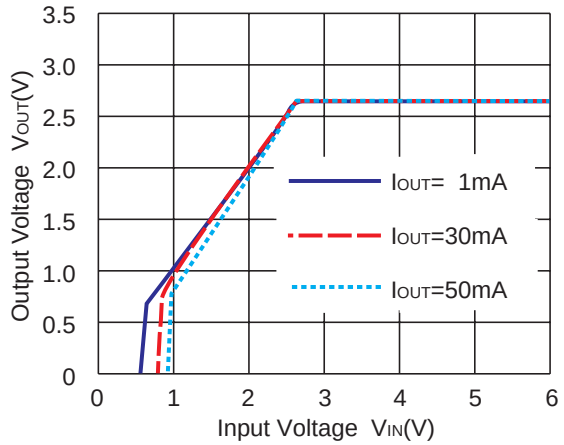

R1131x33xx

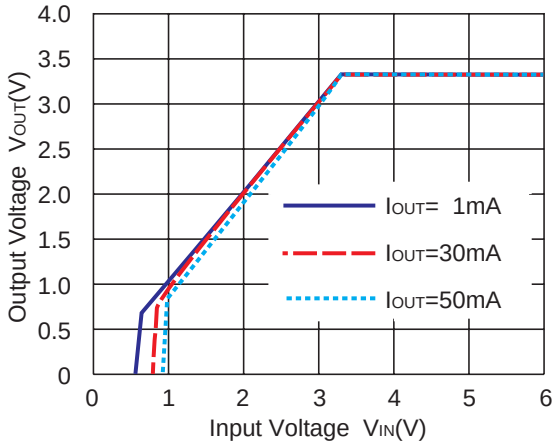

3) Supply Current vs. Input Voltage

R1131x08xx

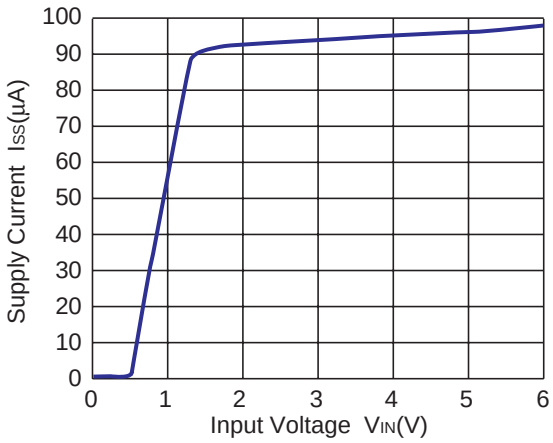

R1131x15xx

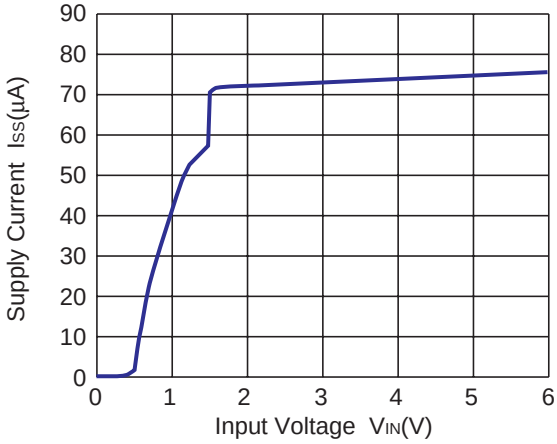

R1131x26xx

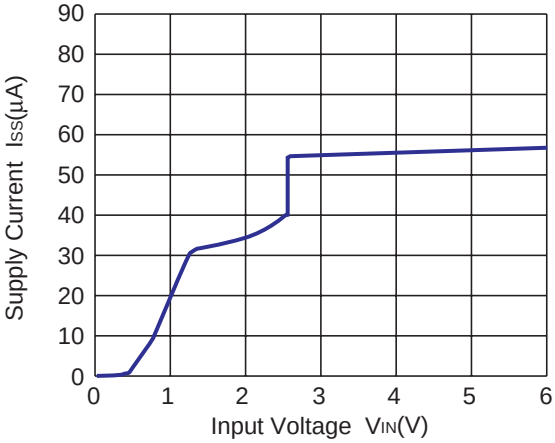

R1131x33xx

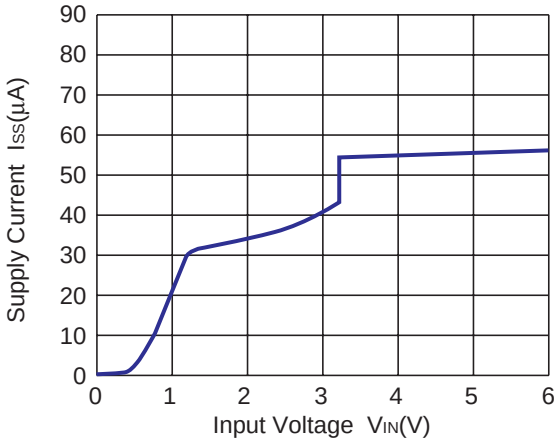

4) Output Voltage vs. Temperature

R1131x08xx

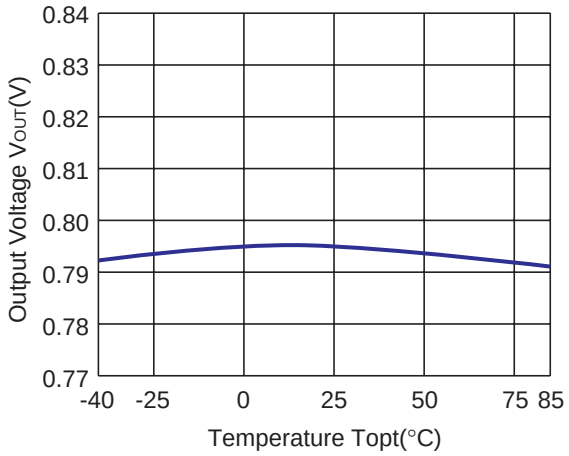

R1131x15xx

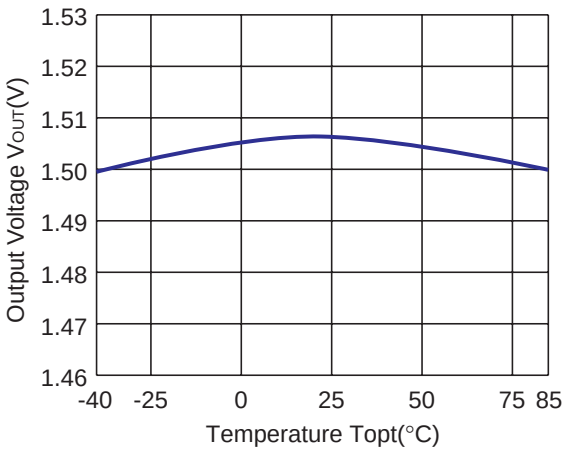

R1131x26xx

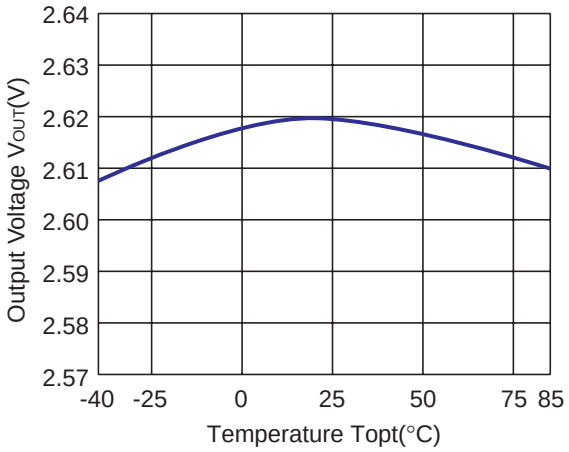

R1131x33xx

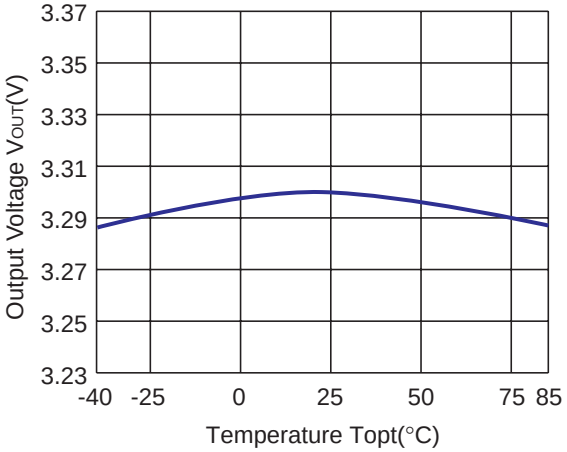

5) Supply Current vs. Temperature

R1131x08xx

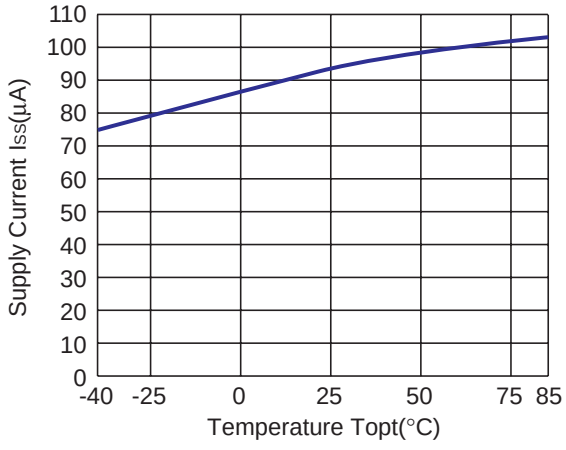

R1131x15xx

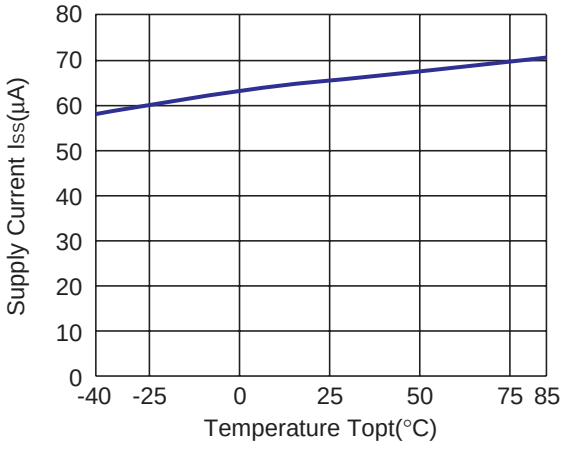

R1131x26xx

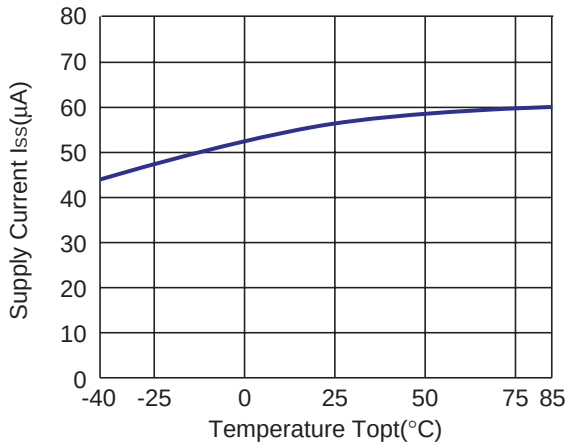

R1131x33xx

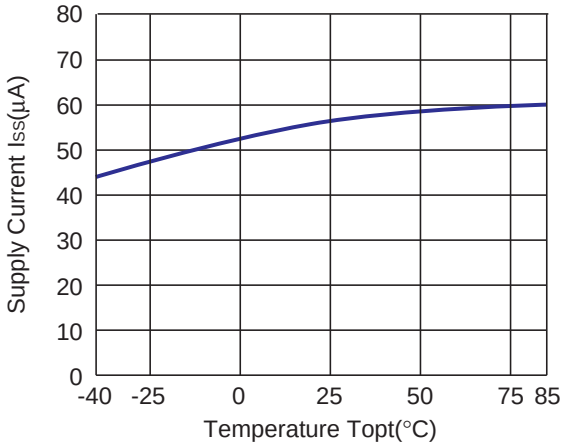

6) Dropout Voltage vs. Output Current

R1131x08xx

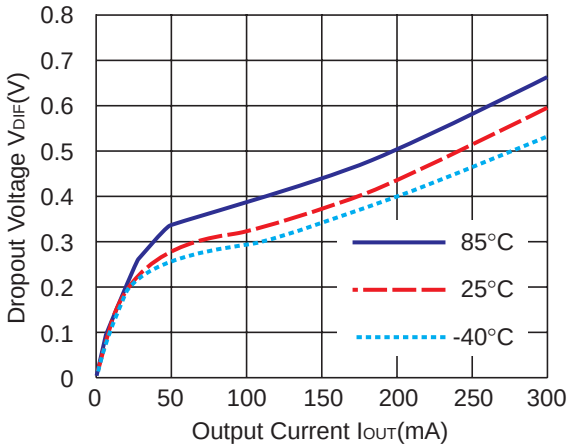

R1131x09xx

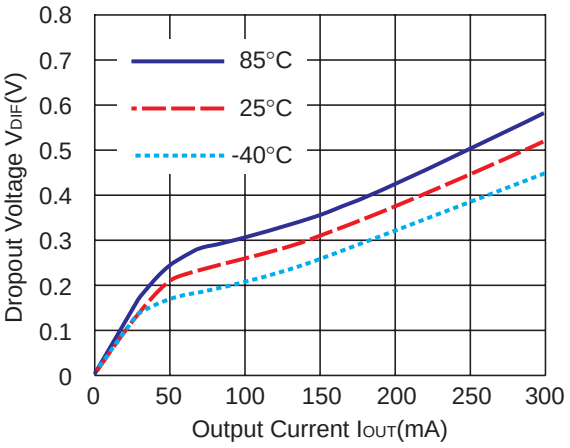

R1131x10xx

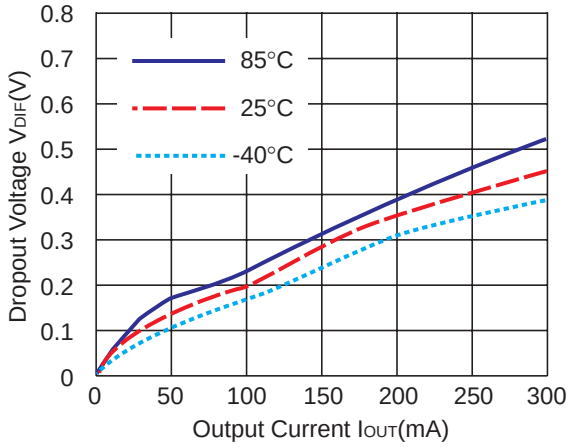

R1131x15xx

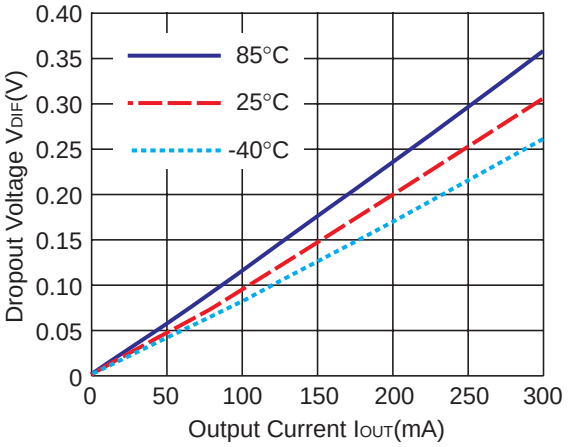

R1131x26xx

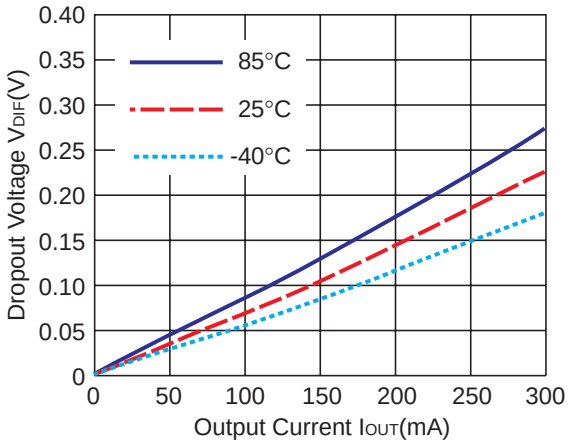

R1131x33xx

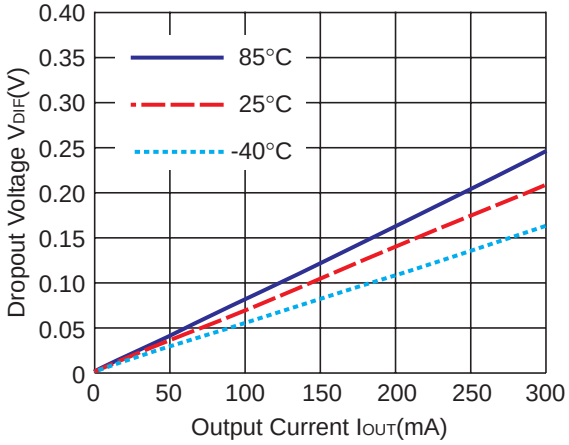

7) Dropout Voltage vs. Set Output Voltage (Topt=25°C)

R1131xxx1x

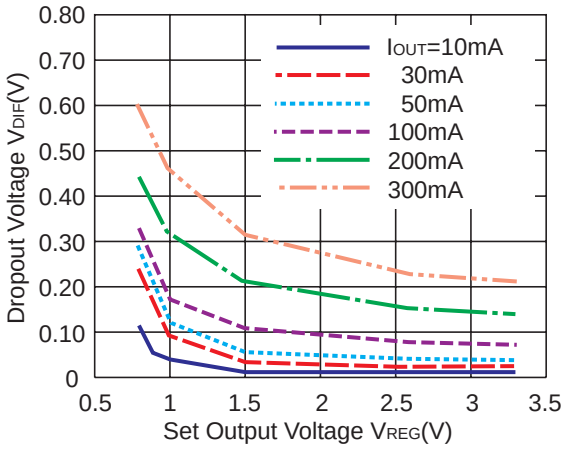

8) Ripple Rejection vs. Input Bias (Topt=25°C CIN=none, COUT=Ceramic 1.0µF Ripple 0.2VP-P)

R1131x26xx (IOUT=1mA)

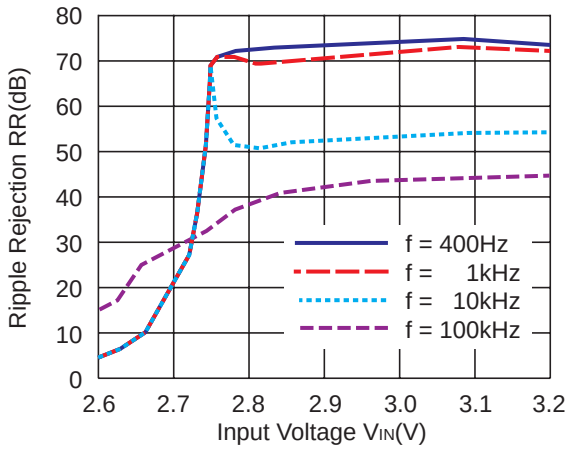

R1131x26xx (IOUT=30mA)

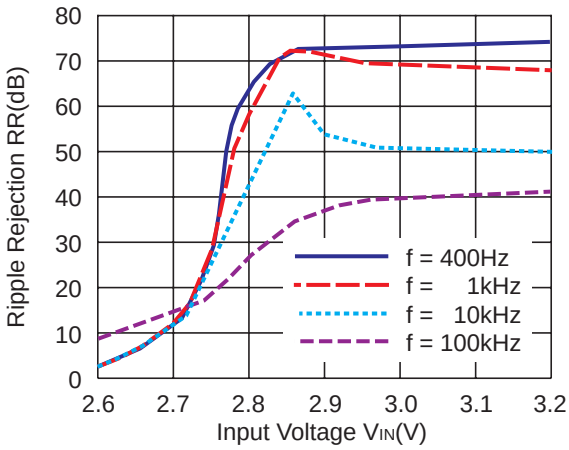

R1131x26xx (I_{OUT}=50mA)

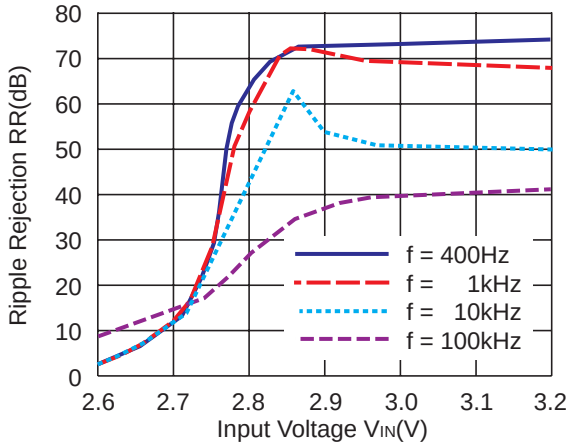

9) Ripple Rejection vs. Frequency (C_{IN}=none)

R1131x08xx

V_{IN}=1.8V_{DC}+0.2Vp-p,
C_{OUT}=Tantalum 1.0µF

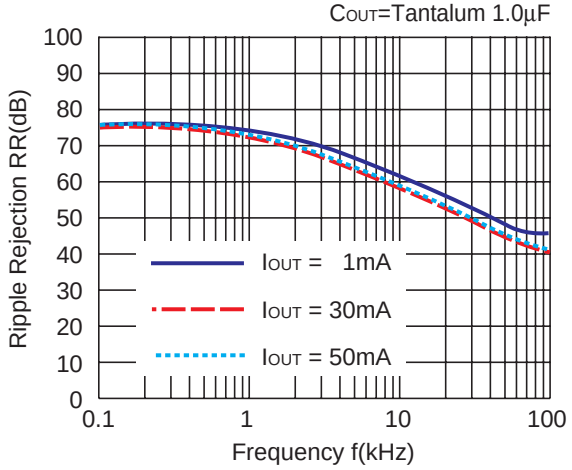

R1131x08xx

V_{IN}=1.8V_{DC}+0.2Vp-p,
C_{OUT}=Tantalum 2.2µF

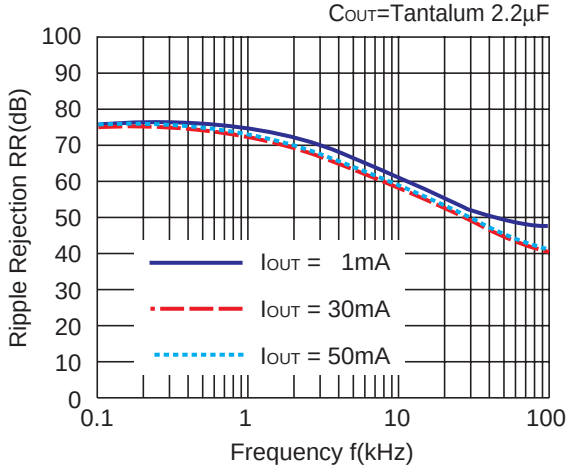

R1131x10xx

V_{IN}=2.0V_{DC}+0.2Vp-p,
C_{OUT}=Ceramic 1.0µF

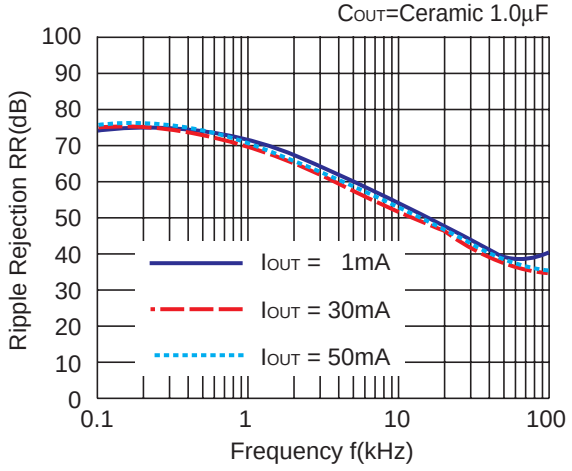

R1131x10xx

V_{IN}=2.0V_{DC}+0.2Vp-p,
C_{OUT}=Ceramic 2.2µF

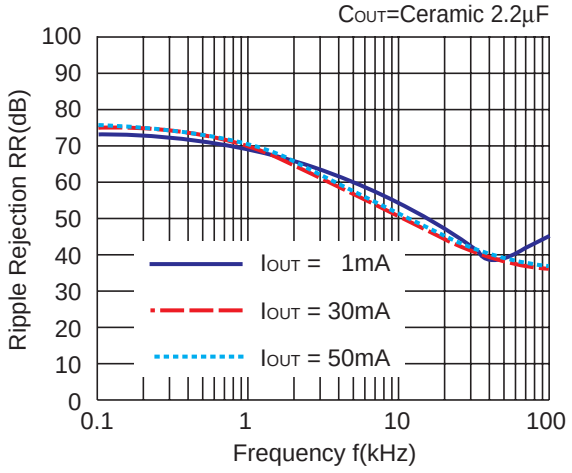

R1131x15xx

V_{IN}=2.5V_{DC}+0.2Vp-p,
C_{OUT}=Ceramic 1.0µF

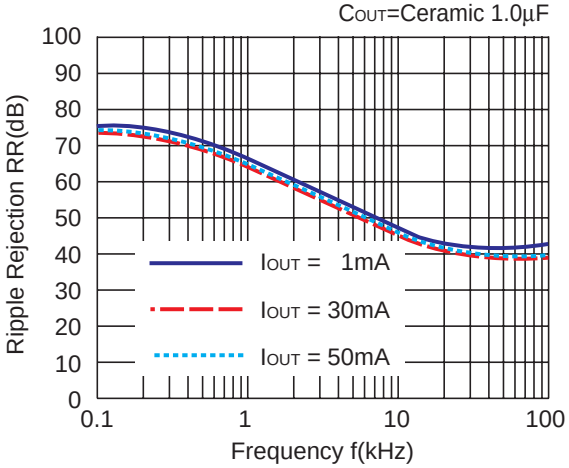

R1131x15xx

V_{IN}=2.5V_{DC}+0.2Vp-p,
C_{OUT}=Ceramic 2.2µF

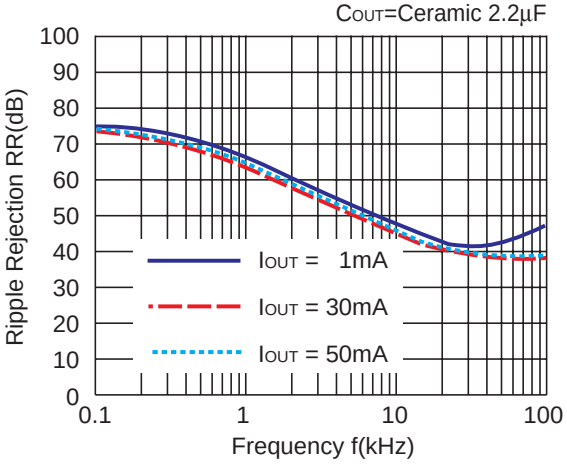

R1131x26xx

V_{IN}=3.6V_{DC}+0.2Vp-p,
C_{OUT}=Ceramic 1.0µF

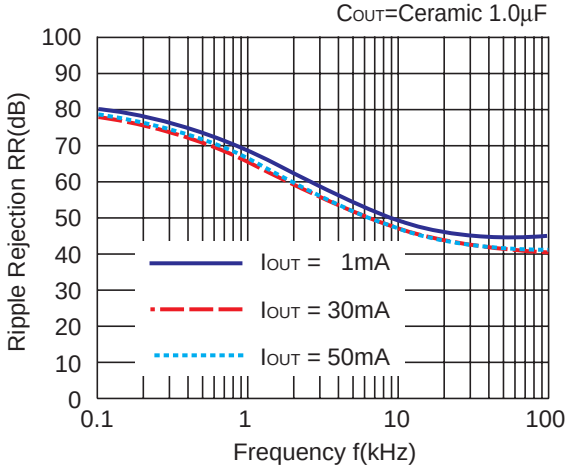

R1131x26xx

V_{IN}=3.6V_{DC}+0.2Vp-p,
C_{OUT}=Ceramic 2.2µF

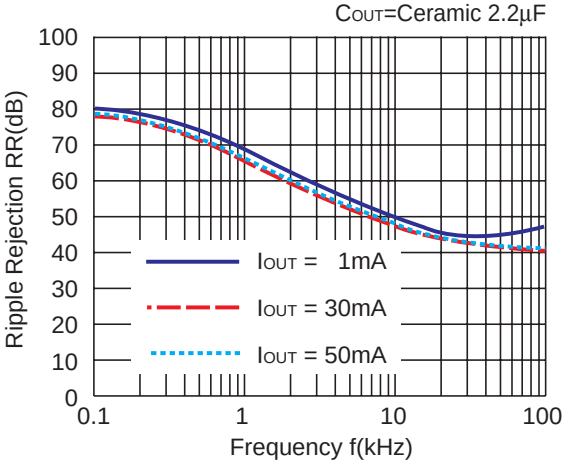

R1131x33xx

V_{IN}=4.3V_{DC}+0.2Vp-p,
C_{OUT}=Ceramic 1.0µF

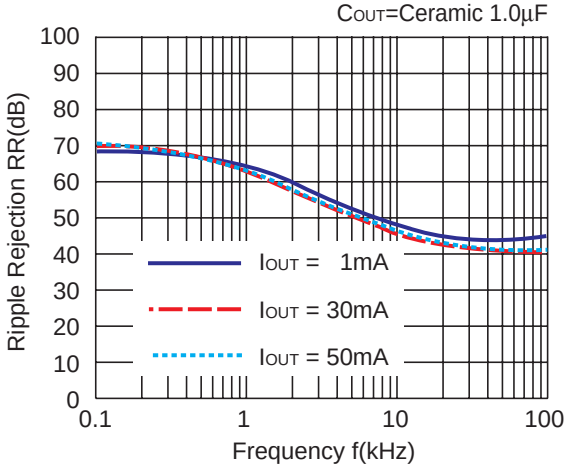

R1131x33xx

V_{IN}=4.3V_{DC}+0.2Vp-p,
C_{OUT}=Ceramic 2.2µF

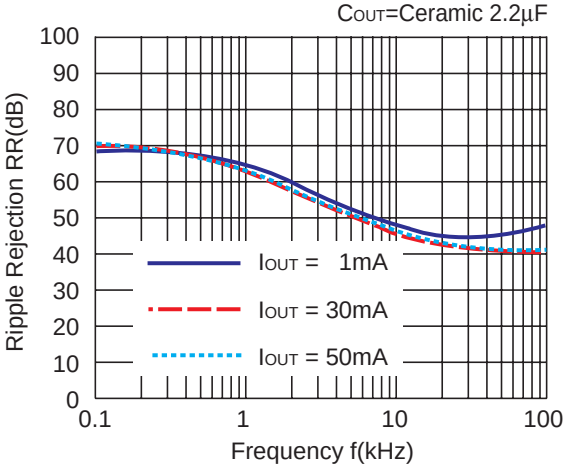

10) Input Transient Response (C_{IN}=none, tr=tf=5µs)

R1131x08xx

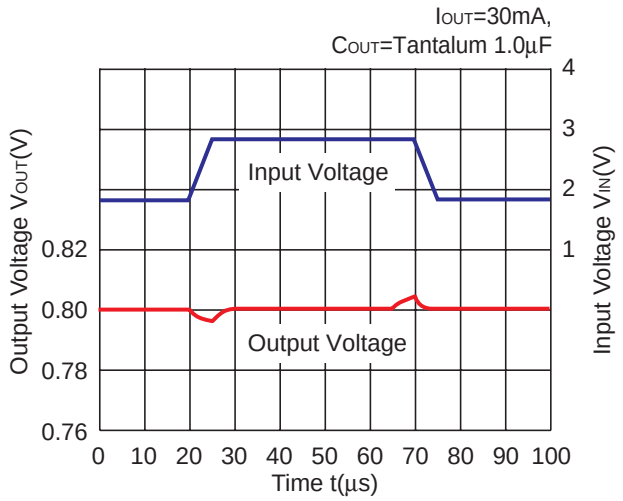

R1131x10x

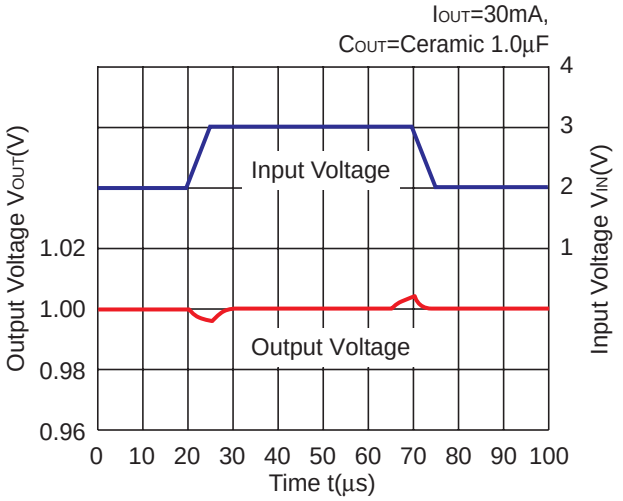

R1131x26xx

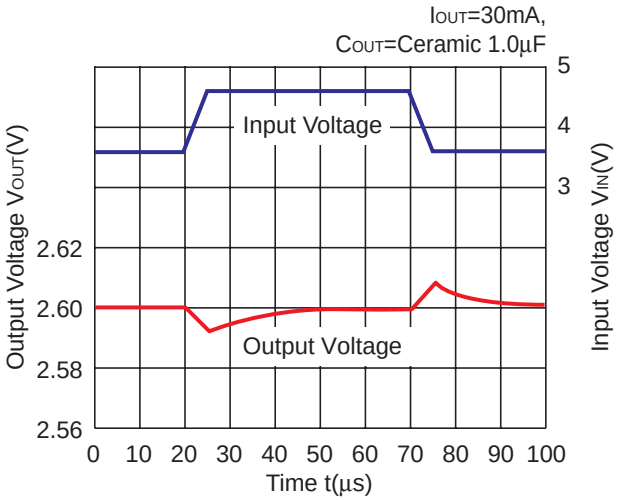

11) Load Transient Response (tr=tf=0.5µs)

R1131x08xx

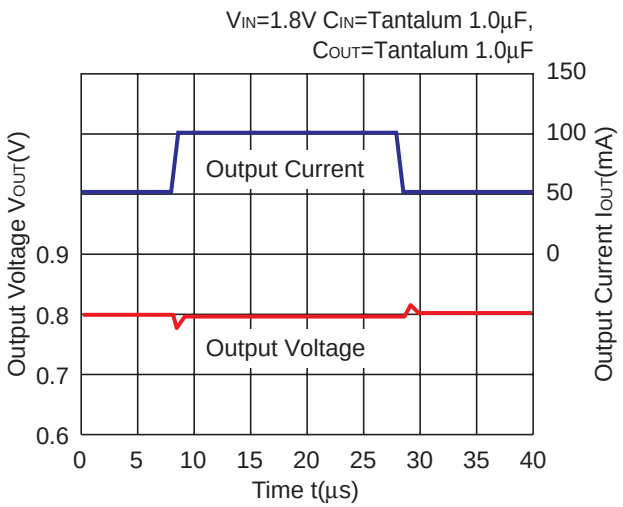

R1131x08xx

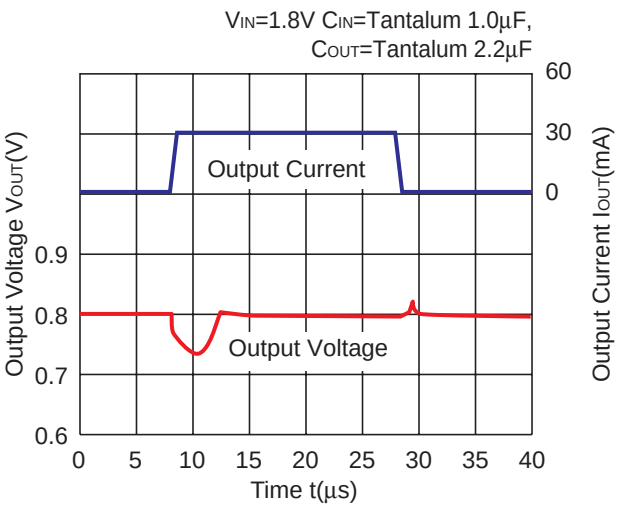

R1131x10xx

V_{IN}=2.0V C_{IN}=Ceramic 1.0µF,
C_{OUT}=Ceramic 1.0µF

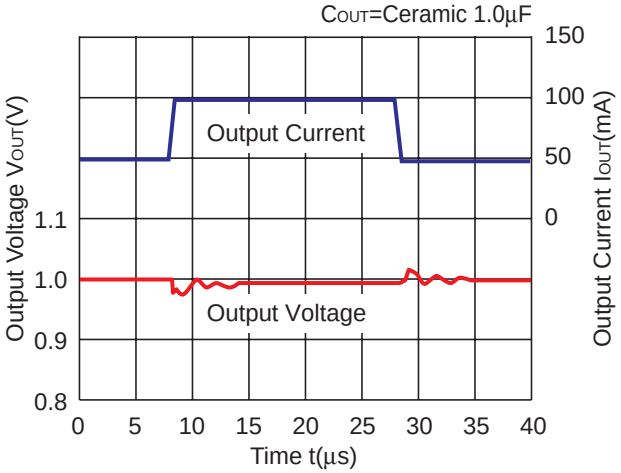

R1131x10xx

V_{IN}=2.0V C_{IN}=Ceramic 1.0µF,
C_{OUT}=Ceramic 2.2µF

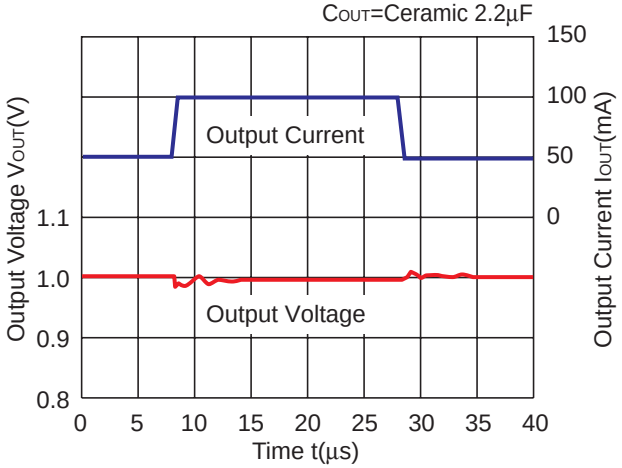

R1131x10xx

V_{IN}=2.0V C_{IN}=Ceramic 1.0µF,
C_{OUT}=Ceramic 1.0µF

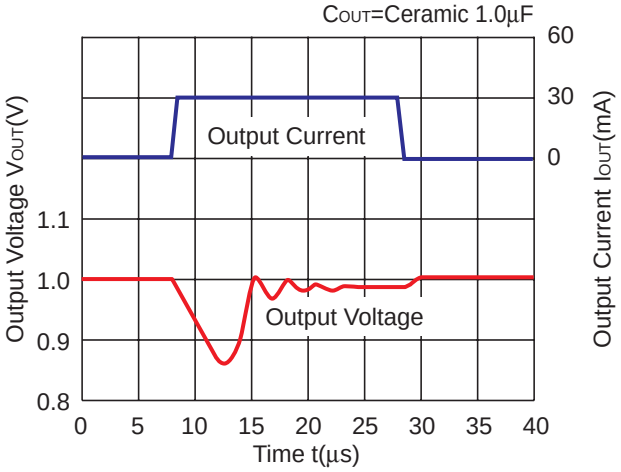

R1131x10xx

V_{IN}=2.0V C_{IN}=Ceramic 1.0µF,
C_{OUT}=Ceramic 2.2µF

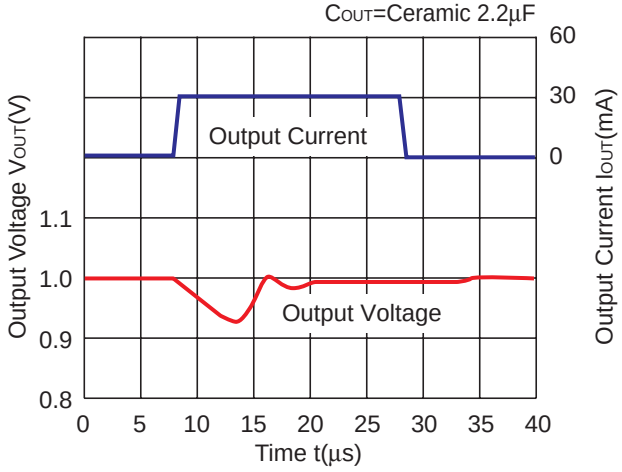

R1131x26xx

V_{IN}=3.6V C_{IN}=Ceramic 1.0µF,
C_{OUT}=Ceramic 1.0µF

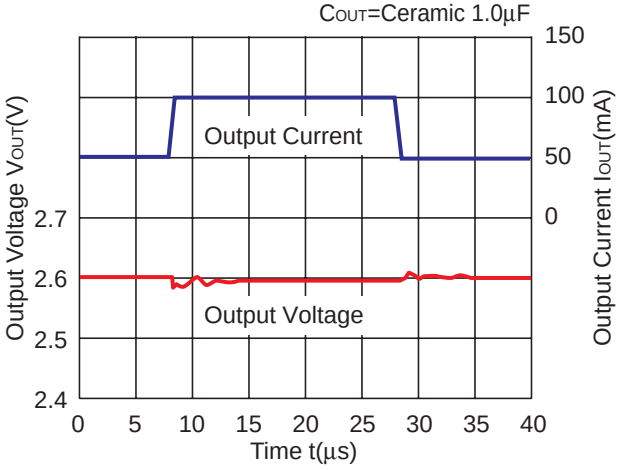

R1131x26xx

V_{IN}=3.6V C_{IN}=Ceramic 1.0µF,
C_{OUT}=Ceramic 2.2µF

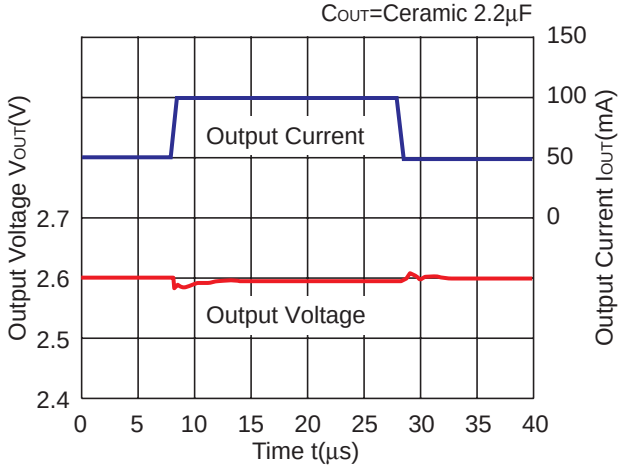

R1131x26xx

V_{IN}=3.6V C_{IN}=Ceramic 1.0µF,
C_{OUT}=Ceramic 1.0µF

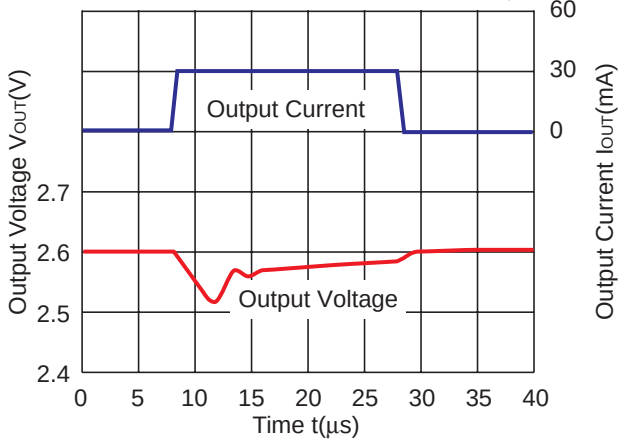

R1131x26xx

V_{IN}=3.6V C_{IN}=Ceramic 1.0µF,
C_{OUT}=Ceramic 2.2µF

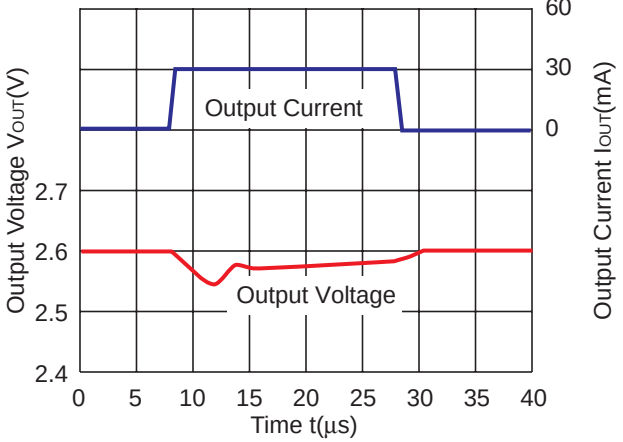

12) Turn on speed with CE pin

R1131x08xx

V_{IN}=1.8V C_{IN}=Tantalum 1.0µF,
C_{OUT}=Tantalum 1.0µF

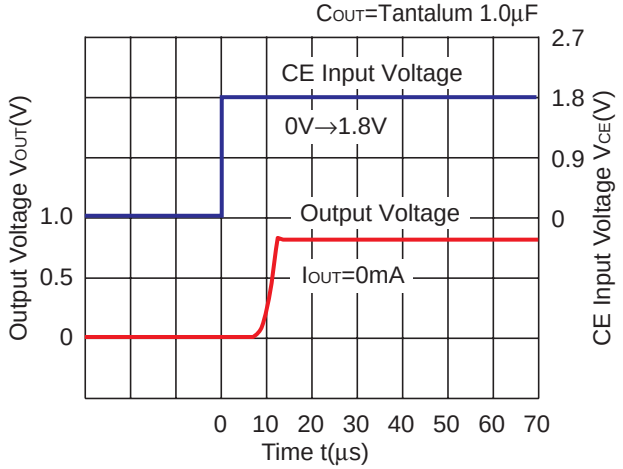

R1131x08xx

V_{IN}=1.8V C_{IN}=Tantalum 1.0µF,
C_{OUT}=Tantalum 1.0µF

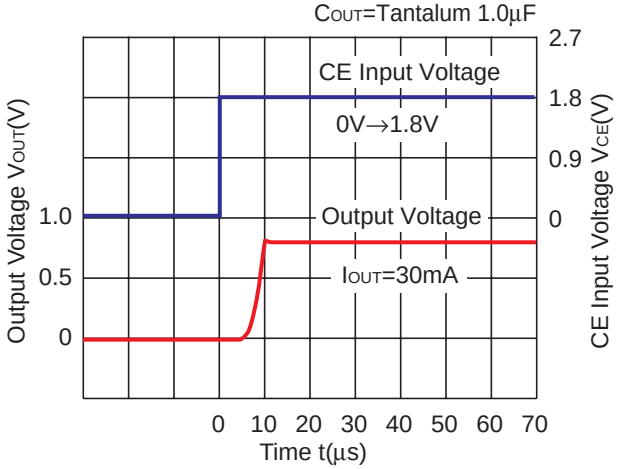

R1131x08xx

V_{IN}=1.8V C_{IN}=Tantalum 1.0µF,
C_{OUT}=Tantalum 1.0µF

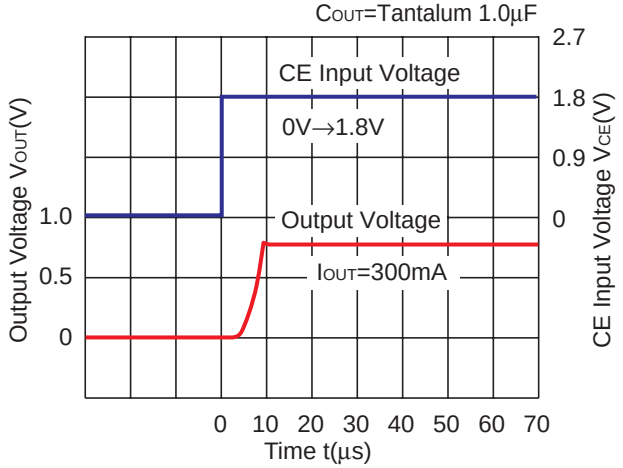

R1131x33xx

V_{IN}=4.3V C_{IN}=Ceramic 1.0µF,
C_{OUT}=Ceramic 1.0µF

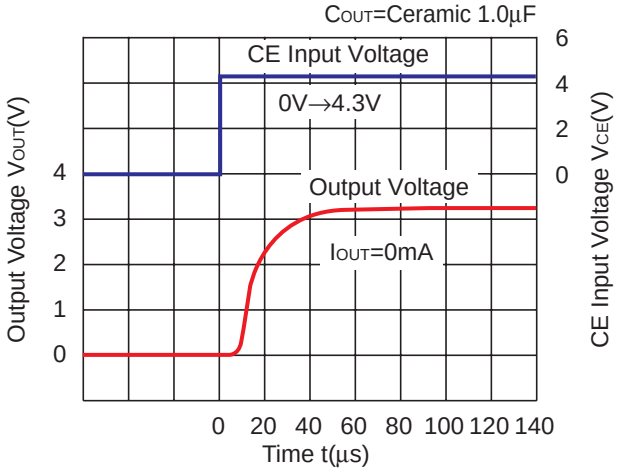

R1131x33xx (ECO=H)

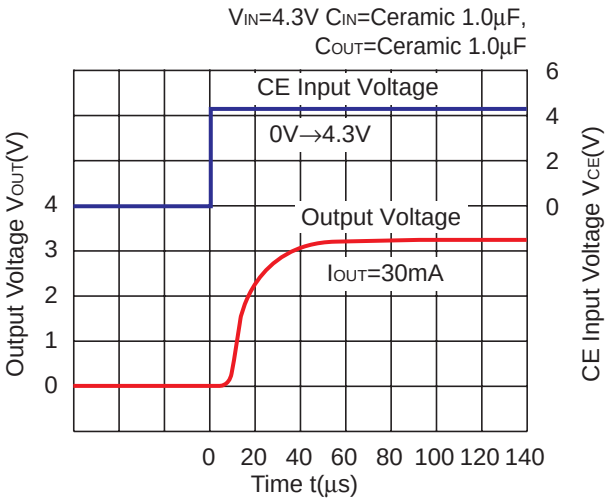

R1131x33xx (ECO=L)

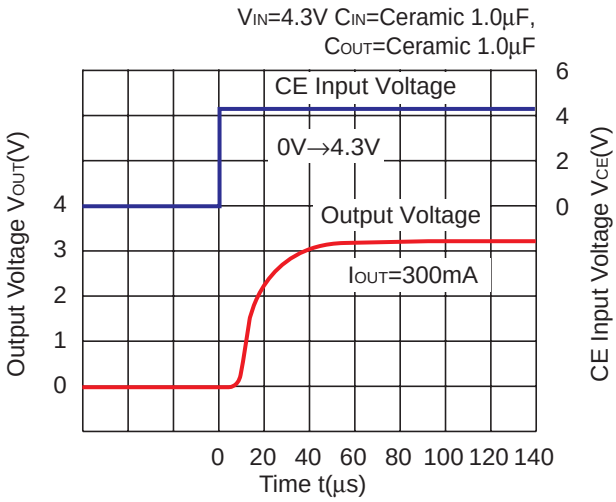

13) Turn-off Speed with CE

R1131x08xD

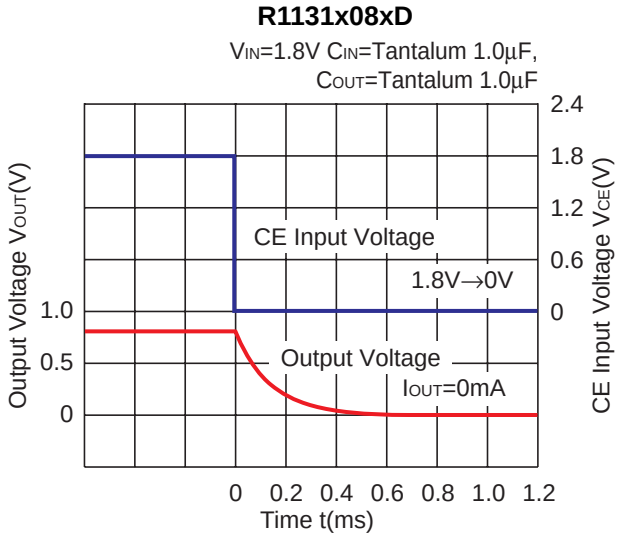

R1131x08xD

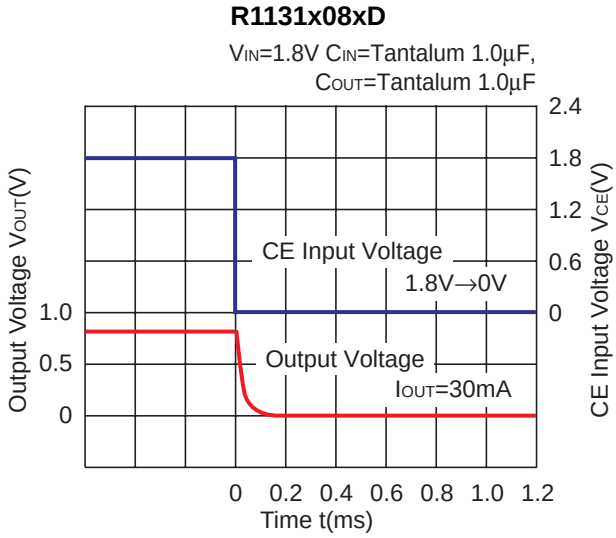

R1131x08xD

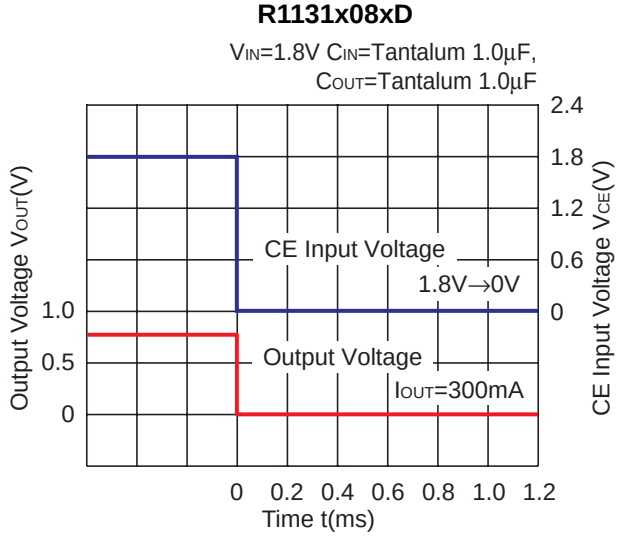

R1131x33xD

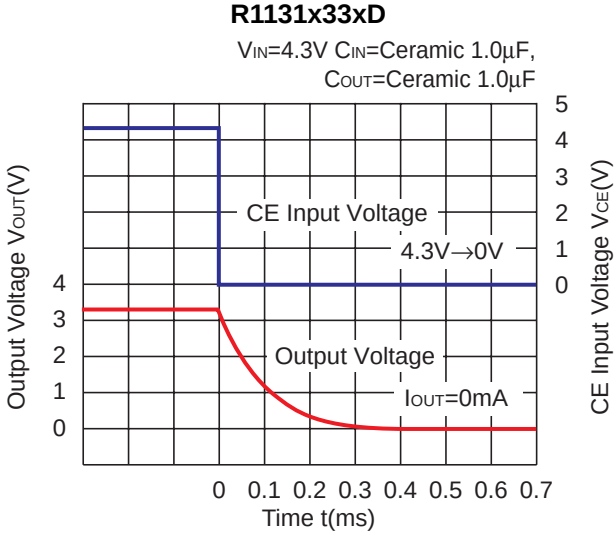

R1131x33xD

V_{IN}=4.3V C_{IN}=Ceramic 1.0µF,
C_{OUT}=Ceramic 1.0µF

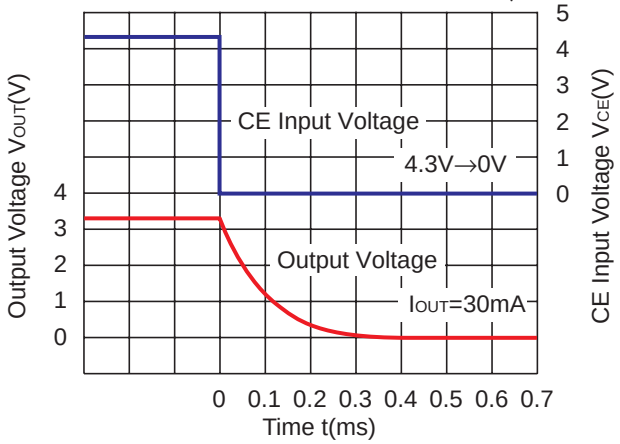

R1131x33xD

V_{IN}=4.3V C_{IN}=Ceramic 1.0µF,
C_{OUT}=Ceramic 1.0µF

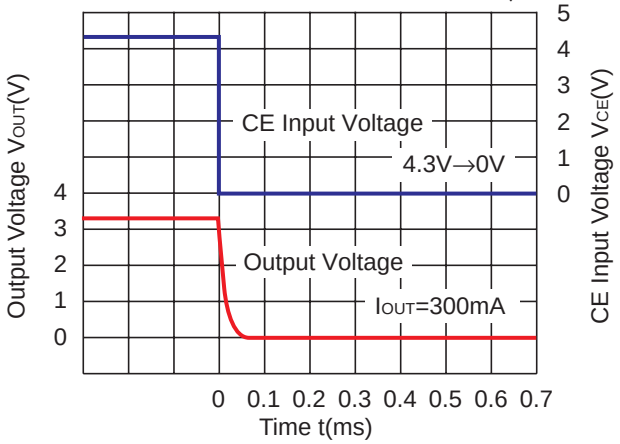

ESR vs. Output Current

When using these ICs, consider the following points:

In these ICs, phase compensation is made for securing stable operation even if the load current is varied. For this purpose, be sure to use a capacitor C_{OUT} with good frequency characteristics and ESR (Equivalent Series Resistance) of which is in the range described as follows:

The relations between I_{OUT} (Output Current) and ESR of Output Capacitor are shown below.

The conditions when the white noise level is under 40μV(Avg.) are marked as the hatched area in the graph.

<Test conditions>

(1) Frequency band: 10Hz to 2MHz

(2) Temperature: 25°C

R1131x08xx

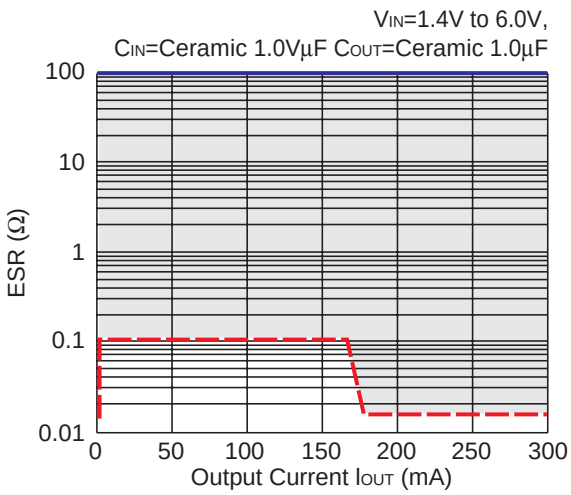

R1131x10xx

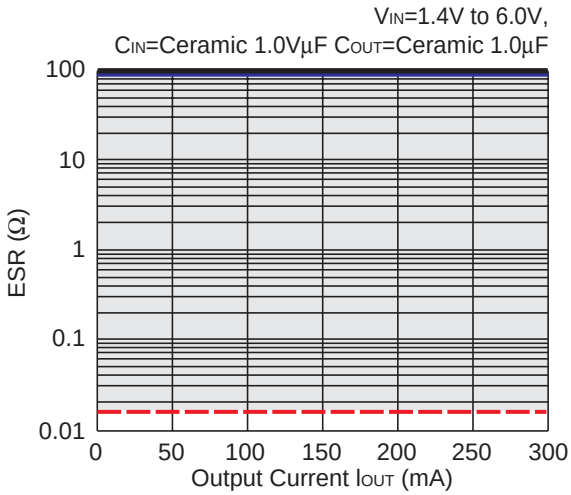

R1131x26xx

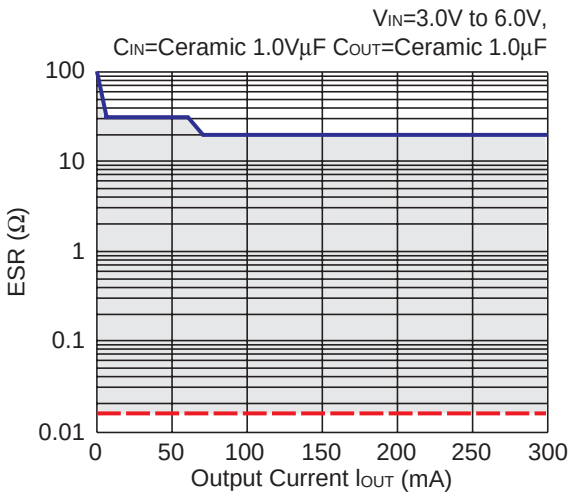

R1131x15xx

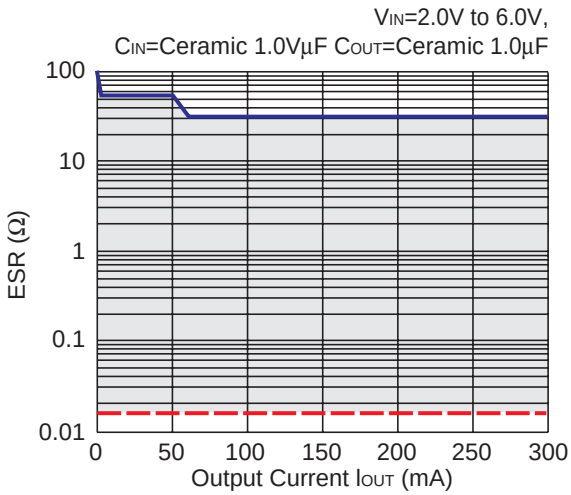

R1131x33xx

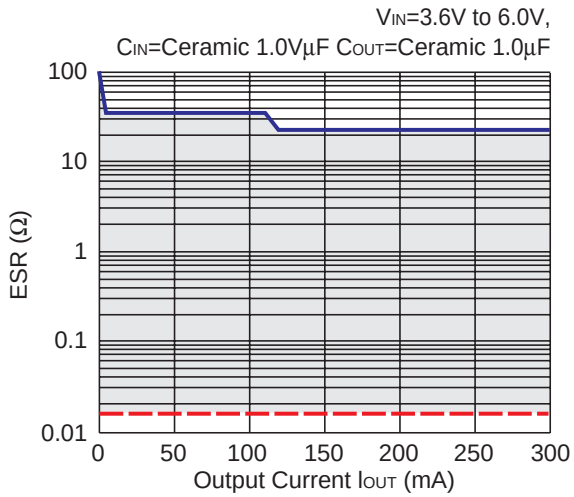
VIN=3.6V to 6.0V,
CIN=Ceramic 1.0VµF COUT=Ceramic 1.0µF
100
10
1
0.1
0.01
ESR (Ω)
0
50
100
150
200
250
300
Output Current IOUT (mA)

1. The products and the product specifications described in this document are subject to change or discontinuation of production without notice for reasons such as improvement. Therefore, before deciding to use the products, please refer to our sales representatives for the latest information thereon.
2. The materials in this document may not be copied or otherwise reproduced in whole or in part without prior written consent of our company.
3. Please be sure to take any necessary formalities under relevant laws or regulations before exporting or otherwise taking out of your country the products or the technical information described herein.
4. The technical information described in this document shows typical characteristics of and example application circuits for the products. The release of such information is not to be construed as a warranty of or a grant of license under our company's or any third party's intellectual property rights or any other rights.
5. The products listed in this document are intended and designed for use as general electronic components in standard applications (office equipment, telecommunication equipment, measuring instruments, consumer electronic products, amusement equipment etc.). Those customers intending to use a product in an application requiring extreme quality and reliability, for example, in a highly specific application where the failure or misoperation of the product could result in human injury or death (aircraft, spacevehicle, nuclear reactor control system, traffic control system, automotive and transportation equipment, combustion equipment, safety devices, life support system etc.) should first contact us.
6. We are making our continuous effort to improve the quality and reliability of our products, but semiconductor products are likely to fail with certain probability. In order to prevent any injury to persons or damages to property resulting from such failure, customers should be careful enough to incorporate safety measures in their design, such as redundancy feature, fire containment feature and fail-safe feature. We do not assume any liability or responsibility for any loss or damage arising from misuse or inappropriate use of the products.
7. Anti-radiation design is not implemented in the products described in this document.
8. The X-ray exposure can influence functions and characteristics of the products. Confirm the product functions and characteristics in the evaluation stage.
9. WLCSP products should be used in light shielded environments. The light exposure can influence functions and characteristics of the products under operation or storage.
10. There can be variation in the marking when different AOI (Automated Optical Inspection) equipment is used. In the case of recognizing the marking characteristic with AOI, please contact our sales or our distributor before attempting to use AOI.
11. Please contact our sales representatives should you have any questions or comments concerning the products or the technical information.

NISSHINBO

Nisshinbo Micro Devices Inc.

Official website
https://www.nisshinbo-microdevices.co.jp/en/
Purchase information
https://www.nisshinbo-microdevices.co.jp/en/buy/

ENTEGRECİ

Bu belge www.entegreci.com üzerinden sunulmaktadır.

Elektronik komponent tedarikinde Entegreci

Entegreci, Eskişehir merkezli, Türkiye geneline satış yapan bir elektronik komponent mağazasıdır. Entegreler (IC), mikrodenetleyiciler, transistörler, diyotlar, pasif elemanlar, konnektörler, modüller ve geliştirme kartları tek adetten seri üretim adetlerine kadar satılır. Ürün sayfalarında güncel stok durumunu, fiyatı ve datasheet bağlantısını bulabilirsiniz.

Parça koduyla arama

Üretici parça numarasını yazın; stok ve fiyatı hemen görün.

www.entegreci.com

Ürün kategorileri

Entegreden kapasitöre tüm elektronik komponent kategorileri.

Kategorilere göz atın

Üreticiler

Aradığınız üreticinin ürünlerini tek sayfada inceleyin.

Üreticileri görün

Toplu alım ve teklif

Listede olmayan ya da yüksek adetli parçalar için teklif isteyin.

Teklif isteyin

www.entegreci.com | **destek@entegreci.com** | **0850 305 90 34**

Entegreci is an online electronic components store based in Türkiye. Search by manufacturer part number to see stock, prices and datasheets for integrated circuits, microcontrollers, transistors, passive components and connectors, or request a quote for parts that are not listed.

Bu sayfa Entegreci tarafından eklenmiştir. Belgenin önceki sayfaları asıl yayıncısına aittir ve içeriği değiştirilmemiştir; en güncel sürüm için belgenin yayıncısına başvurun.