120mA LDO REGULATOR

NO.EA-082-111027

OUTLINE

The R1141Q Series consist of CMOS-based voltage regulator ICs with high output voltage accuracy, low supply current, low ON-resistance, and high ripple rejection. Each of these voltage regulator ICs consists of a voltage reference unit, an error amplifier, resistors for setting Output Voltage, a current limit circuit, and a chip enable circuit.

Output Current Limit circuit is embedded in the R1141Q Series to prevent the break down of the IC caused by excess current.

Chip enable circuit realizes standby mode and makes consumption current extremely small.

These ICs perform with low dropout voltage and a chip enable function. The line transient response and load transient response of the R1141Q Series are excellent, making these ICs very suitable for the power supply for hand-held communication equipment.

Their output voltage is internally fixed with high accuracy. Since the package for these ICs is SC-82AB (Super Mini-mold) package, high density mounting of the ICs on boards is possible.

FEATURES

- Supply Current ..... Typ. 90μA
- Standby Mode ..... Typ. 0.1μA
- Dropout Voltage ..... Typ. 0.15V (I_{OUT}=100mA, Output Voltage=3.0V Type)
- Ripple Rejection ..... Typ. 75dB ($V_{OUT} \leqq$ 2.4V)
  Typ. 70dB ($V_{OUT} \geqq$ 2.5V) (f=1kHz)
- Temperature-Drift Coefficient of Output Voltage ..... Typ. ±100ppm/°C
- Line Regulation ..... Typ. 0.02%/V
- Output Voltage Accuracy ..... ±1.5% or ±30mV ($V_{OUT} \leqq$ 2.0V)
- Excellent Dynamic Response
- Package ..... SC-82AB (Super Mini-mold)
- Output Voltage Range ..... 1.5V to 4.0V (0.1V steps)
  (For other voltages, please refer to MARK INFORMATIONS.)
- Built-in Chip Enable Circuit (B/D : active high)
- Built-in Fold-back Protection Circuit ..... Typ. 40mA (Short Current)
- Ceramic capacitor can be used for Output pin ..... Recommended value is 2.2μF or more.

APPLICATIONS

- Power source for cellular phones such as GSM, CDMA and various kinds of PCS.
- Power source for electrical appliances such as cameras, VCRs and camcorders, and hand-held communication equipment.
- Power source for battery-powered equipment.
- Very stable Voltage Reference

BLOCK DIAGRAMS

R1141Qxx1B

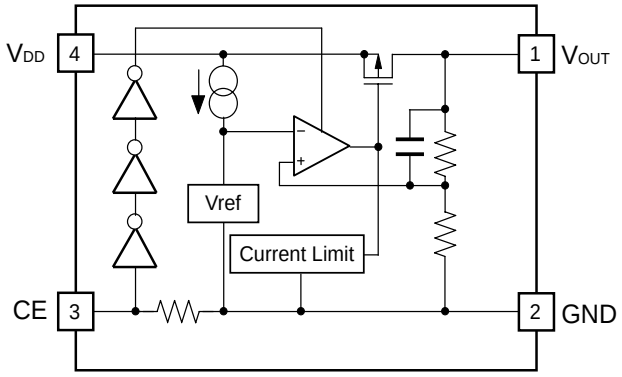

R1141Qxx1D

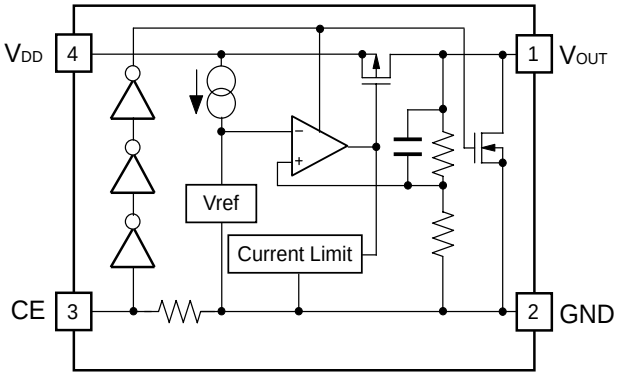

SELECTION GUIDE

The output voltage, auto discharge function for the ICs can be selected at the user's request.

Product Name	Package	Quantity per Reel	Pb Free	Halogen Free
R1141Qxx1∗-TR-FE	SC-82AB	3,000 pcs	Yes	Yes

xx: The output voltage can be designated in the range from 1.5V(15) to 4.0V(40) in 0.1V steps.
(For other voltages, please refer to MARK INFORMATIONS.)

∗ : The auto discharge function at off state are options as follows.
(B) without auto discharge function at off state
(D) with auto discharge function at off state

PIN CONFIGURATION

● **SC-82AB**

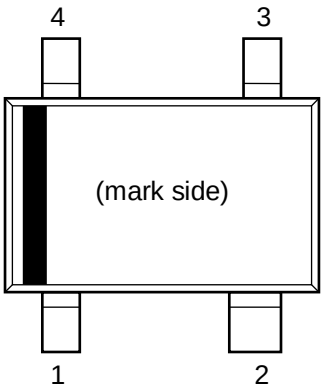

PIN DESCRIPTION

Pin No	Symbol	Pin Description
1	V_{OUT}	Output Pin
2	GND	Ground Pin
3	CE	Chip Enable Pin ("H" Active)
4	V_{DD}	Input Pin

ABSOLUTE MAXIMUM RATINGS

Symbol	Item	Rating	Unit
V_{IN}	Input Voltage	6.5	V
V_{CE}	Input Voltage (CE Pin)	6.5	V
V_{OUT}	Output Voltage	−0.3 to V_{IN} +0.3	V
I_{OUT}	Output Current	140	mA
P_D	Power Dissipation (SC-82AB)*	380	mW
Topt	Operating Temperature Range	−40 to 85	°C
Tstg	Storage Temperature Range	−55 to 125	°C

∗) For Power Dissipation, please refer to PACKAGE INFORMATION.

ABSOLUTE MAXIMUM RATINGS

Electronic and mechanical stress momentarily exceeded absolute maximum ratings may cause the permanent damages and may degrade the life time and safety for both device and system using the device in the field.
The functional operation at or over these absolute maximum ratings is not assured.

ELECTRICAL CHARACTERISTICS

- **R1141Qxx1B/D**

Topt=25°C

Symbol	Item	Conditions	Min.	Typ.	Max.	Unit
V_{OUT}	Output Voltage	V_{IN} = Set V_{OUT}+1.0V 1mA ≦ I_{OUT} ≦ 30mA(*1)	×0.985 (-30mV)		×1.015 (+30mV)	V
I_{OUT}	Output Current	V_{IN}- V_{OUT}=1.0V	120			mA
$\Delta V_{OUT}/\Delta I_{OUT}$	Load Regulation	V_{IN} = Set V_{OUT}+1.0V 1mA ≦ I_{OUT} ≦ 120mA		12	40	mV
V_{DIF}	Dropout Voltage	Refer to the ELECTRICAL CHARACTERISTICS by OUTPUT VOLTAGE				
I_{SS}	Supply Current	V_{IN} = Set V_{OUT}+1.0V		90	160	μA
Istandby	Supply Current (Standby)	V_{IN}=V_{CE}= Set V_{OUT}+1.0V		0.1	1.0	μA
$\Delta V_{OUT}/\Delta V_{IN}$	Line Regulation	Set V_{OUT}+0.5V ≦ V_{IN} ≦ 6.0V I_{OUT} = 30mA (In case that V_{OUT} ≦ 1.6V, 2.2V ≦ V_{IN} ≦ 6.0V)		0.02	0.10	%/V
RR	Ripple Rejection	f = 1kHz, Ripple 0.5Vp-p V_{IN} = Set V_{OUT}+1V, I_{OUT} = 30mA (In case that V_{OUT} ≦ 1.7V, V_{IN}-V_{OUT}=1.2V)		75 (70) (*2)		dB
V_{IN}	Input Voltage		2.2		6.0	V
$\Delta V_{OUT}/\Delta Topt$	Output Voltage Temperature Coefficient	I_{OUT}=30mA −40°C ≦ Topt ≦ 85°C		±100		ppm/°C
I_{SC}	Short Current Limit	V_{OUT}=0V		40		mA
R_{PU}	CE Pull-up resistance		0.7	2.0	8.0	MΩ
V_{CEH}	CE Input Voltage “H”		1.5		V_{IN}	V
V_{CEL}	CE Input Voltage “L”		0.0		0.3	V
en	Output Noise	BW=10Hz to 100kHz		30		μVrms
R_{LOW}	Low Output Nch Tr. ON Resistance (of D version)	V_{CE}=0V		60		Ω

*1: ±30mV Tolerance at V_{OUT} ≦ 2.0V

*2: 70dB at V_{OUT} ≧ 2.5V

RECOMMENDED OPERATING CONDITIONS (ELECTRICAL CHARACTERISTICS)

All of electronic equipment should be designed that the mounted semiconductor devices operate within the recommended operating conditions. The semiconductor devices cannot operate normally over the recommended operating conditions, even if when they are used over such conditions by momentary electronic noise or surge. And the semiconductor devices may receive serious damage when they continue to operate over the recommended operating conditions.

- **ELECTRICAL CHARACTERISTICS by OUTPUT VOLTAGE**

Output Voltage V_{OUT} (V)	Dropout Voltage V_{DIF} (V)		
	Condition	Typ.	Max.
V_{OUT} = 1.5	I_{OUT} = 120mA	0.36	0.70
V_{OUT} = 1.6		0.32	0.60
V_{OUT} = 1.7		0.30	0.50
1.8 ≦ V_{OUT} ≦ 2.0		0.28	0.40
2.1 ≦ V_{OUT} ≦ 2.7		0.24	0.35
2.8 ≦ V_{OUT} ≦ 4.0		0.18	0.28

TECHNICAL NOTES

When using these ICs, consider the following points:

Phase Compensation

In these ICs, phase compensation is made for securing stable operation even if the load current is varied. For this purpose, be sure to use a 2.2µF or more capacitor C_{OUT} with good frequency characteristics and ESR (Equivalent Series Resistance).

(Note: When the additional ceramic capacitors are connected to the Output Pin with Output capacitor for phase compensation, the operation might be unstable. Because of this, test these ICs with as same external components as ones to be used on the PCB.)

PCB Layout

Make V_{DD} and GND lines sufficient. When their impedance is high, picking up the noise or unstable operation may result. Connect a capacitor with as much as 1.0µF capacitor between V_{DD} and GND pin as close as possible.

Set external components, especially output capacitor as close as possible to the ICs and make wiring as short as possible.

TYPICAL APPLICATION

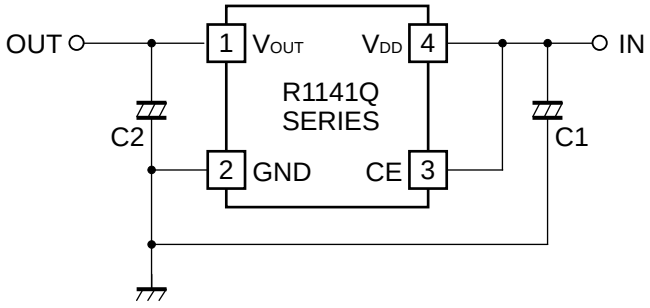

(External Components)
Output Capacitor; Ceramic Type C1=1.0µF C2=2.2µF

TEST CIRCUITS

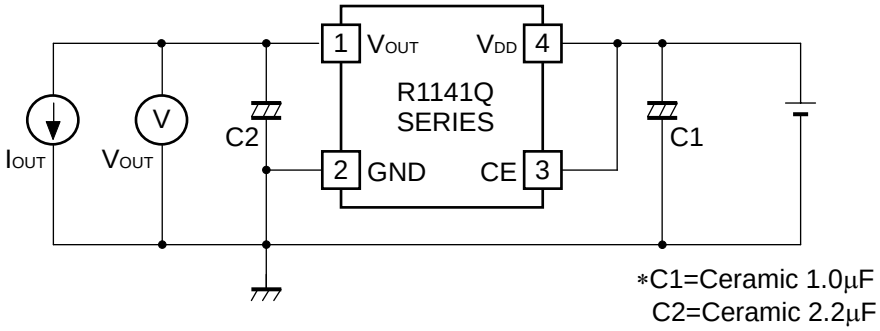

Fig.1 Standard test Circuit

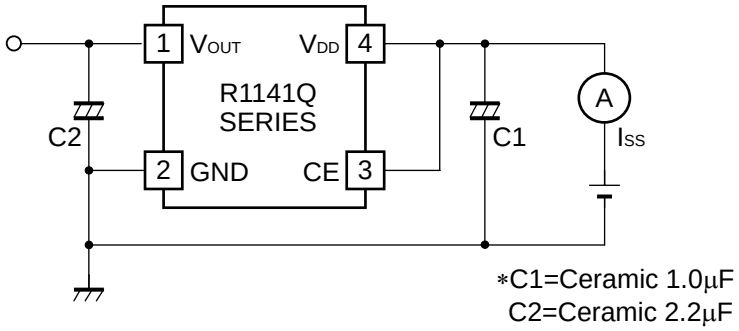

Fig.2 Supply Current Test Circuit

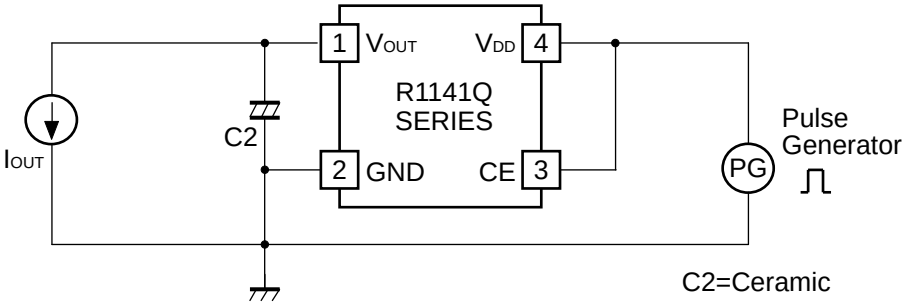

Fig.3 Ripple Rejection, Line Transient Response Test Circuit

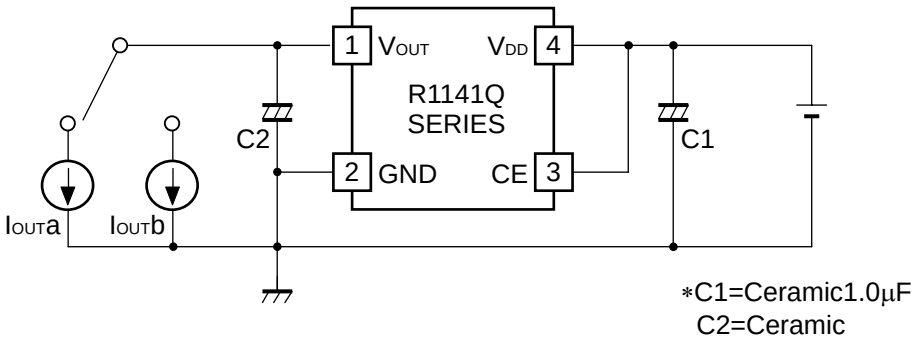

Fig.4 Load Transient Response Test Circuit

TYPICAL CHARACTERISTICS

1) Output Voltage vs. Output Current

R1141Q151x

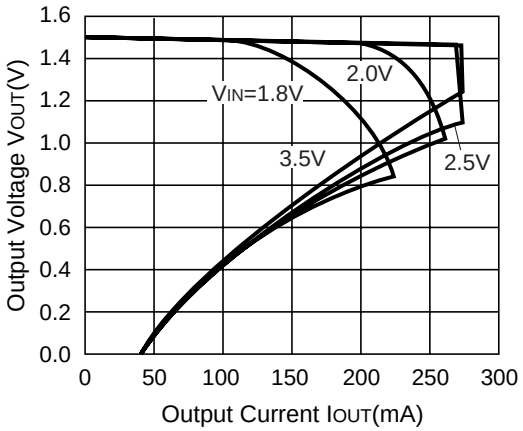

R1141Q201x

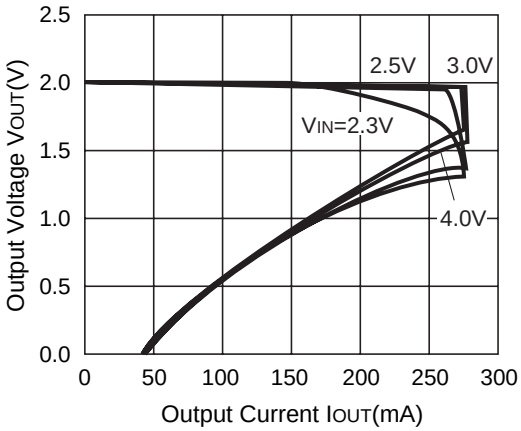

R1141Q281x

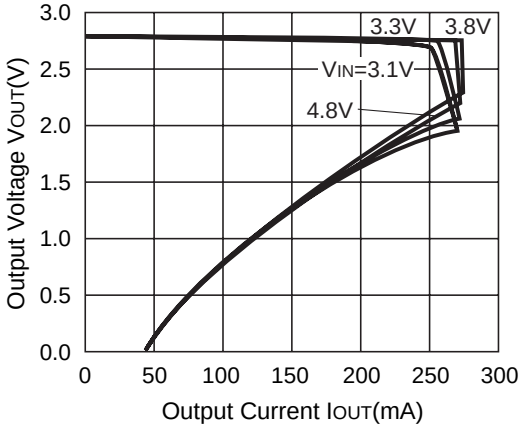

R1141Q401x

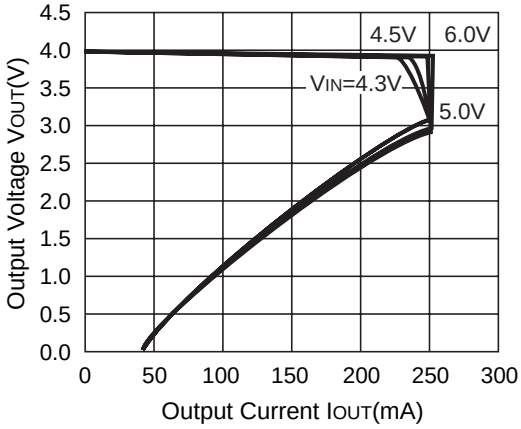

2) Output Voltage vs. Input Voltage

R1141Q151x

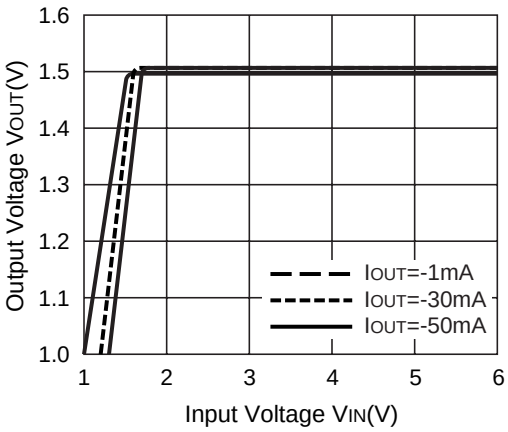

R1141Q201x

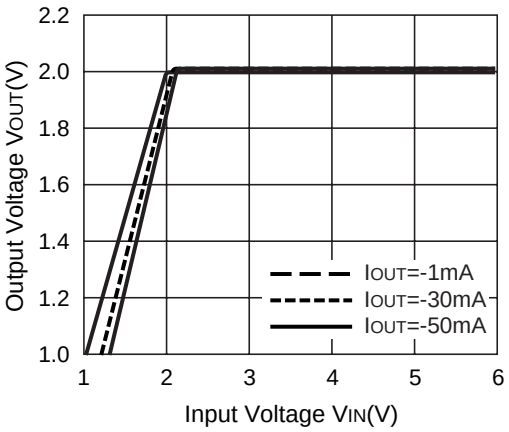

R1141Q281x

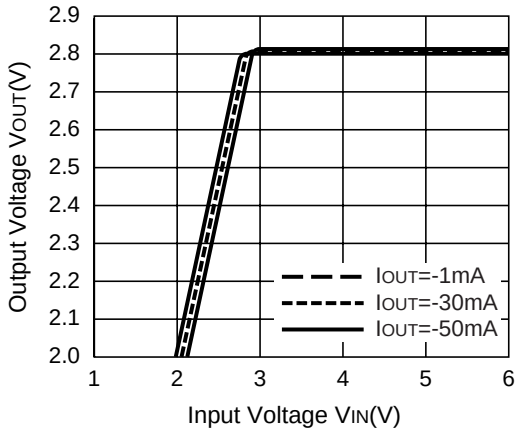

R1141Q401x

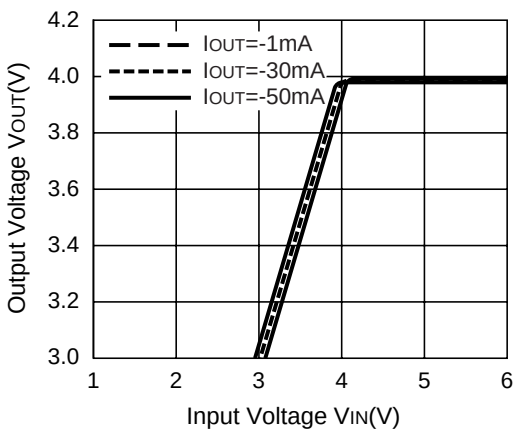

3) Dropout Voltage vs. Output Current

R1141Q151x

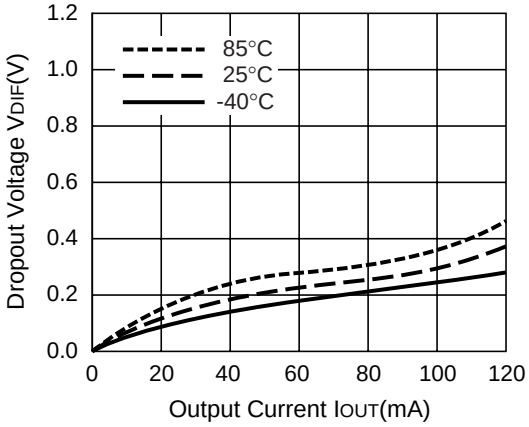

R1141Q201x

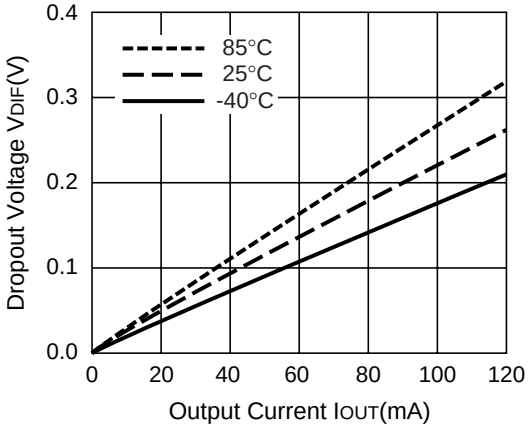

R1141Q281x

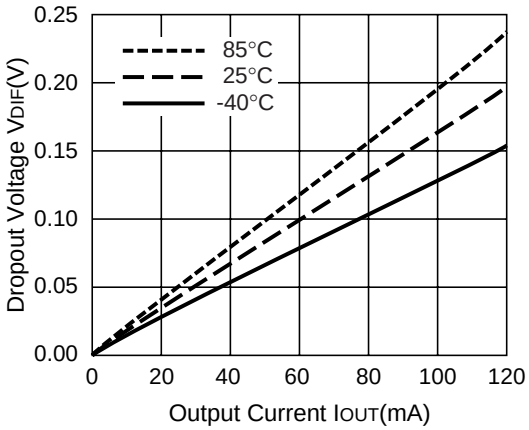

R1141Q401x

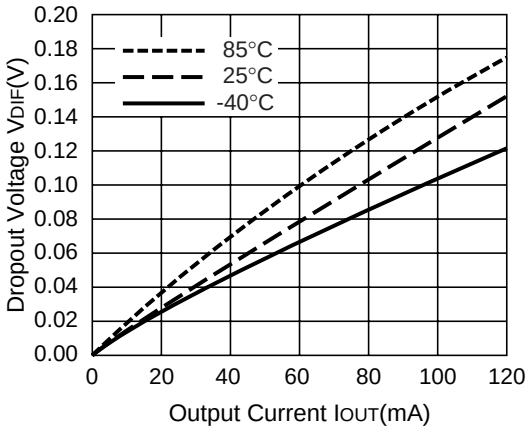

4) Output Voltage vs. Temperature

R1141Q151x

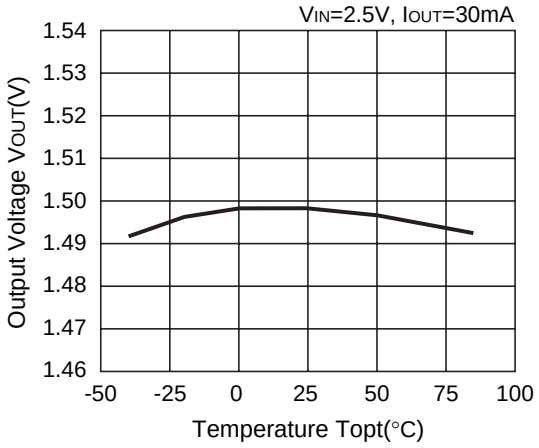

R1141Q201x

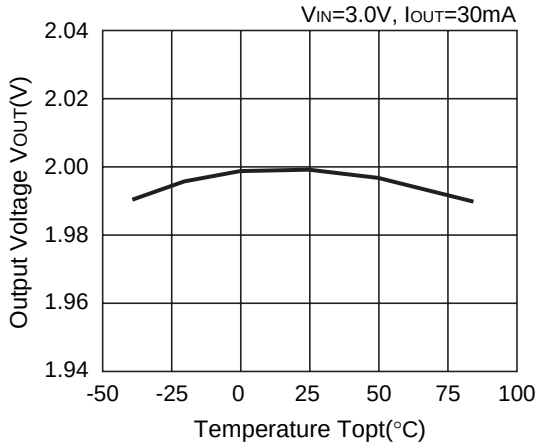

R1141Q281x

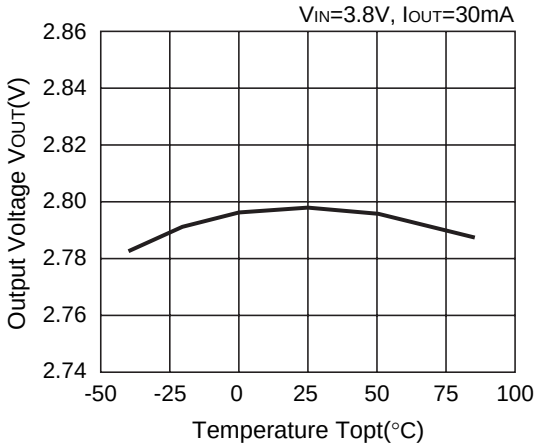

R1141Q401x

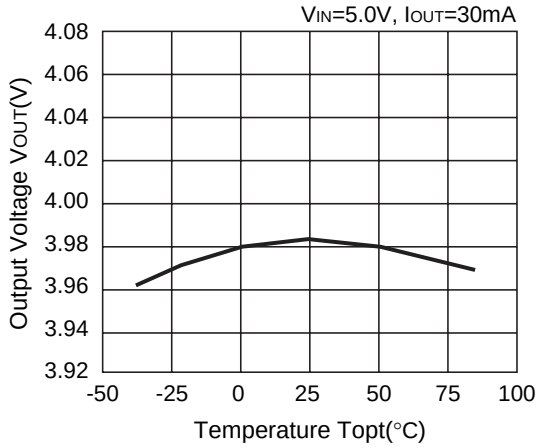

5) Supply Current vs. Input Voltage (Topt=25°C)

R1141Q151x

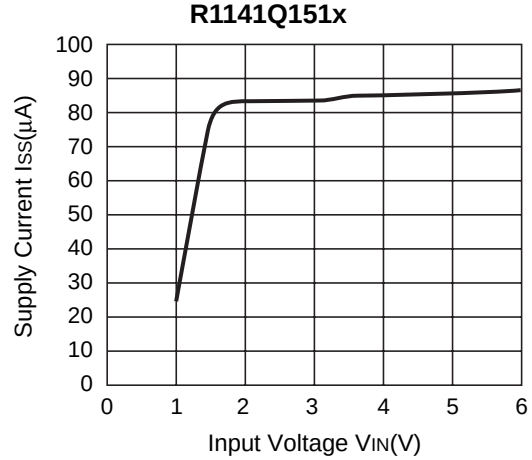

R1141Q201x

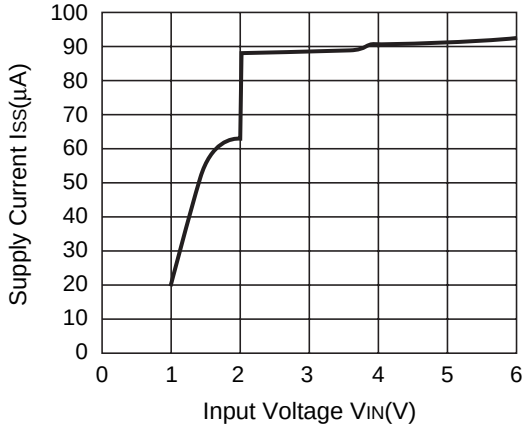

R1141Q281x

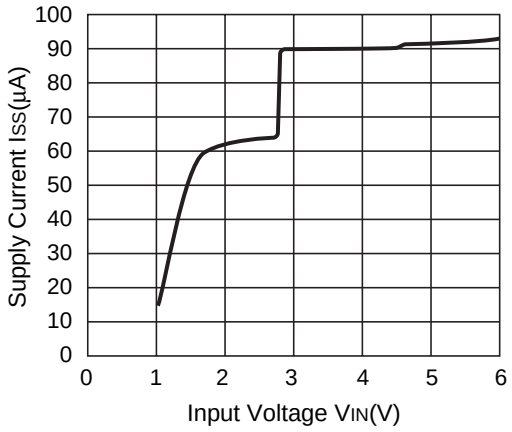

R1141Q401x

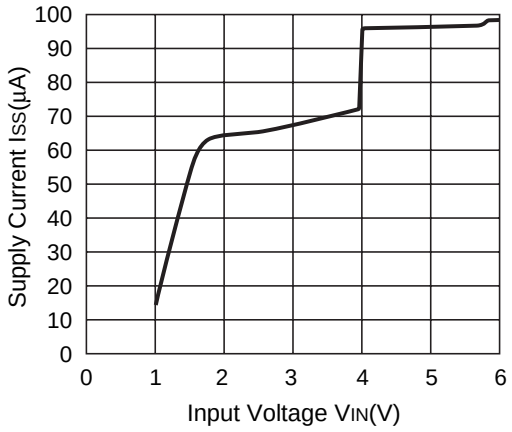

6) Supply Current vs. Temperature

R1141Q151x

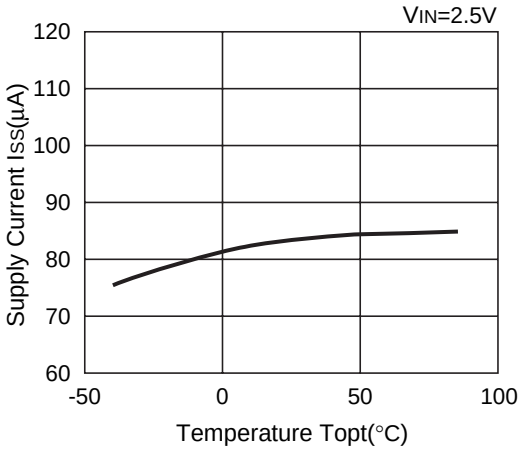

R1141Q201x

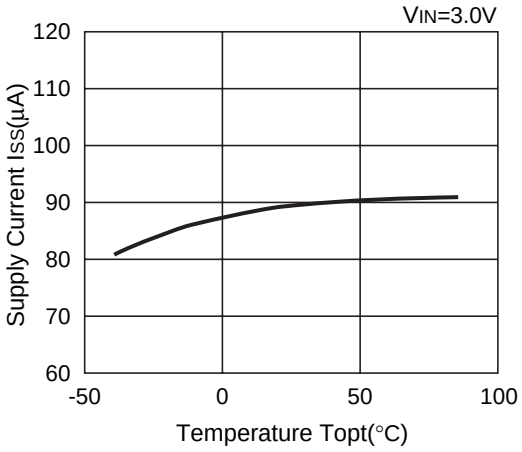

R1141Q281x

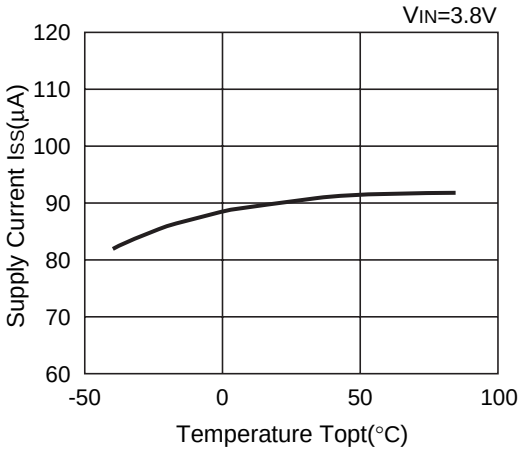

R1141Q401x

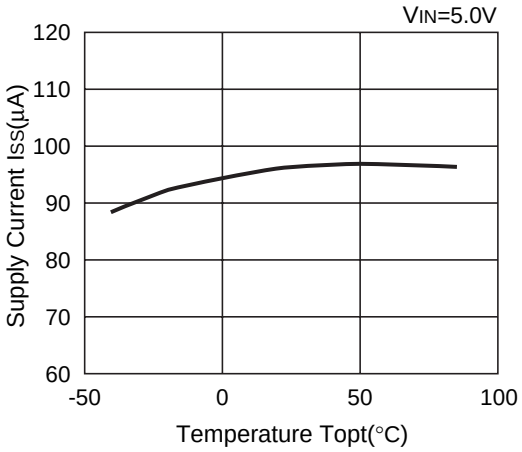

7) Dropout Voltage vs. Set Output Voltage

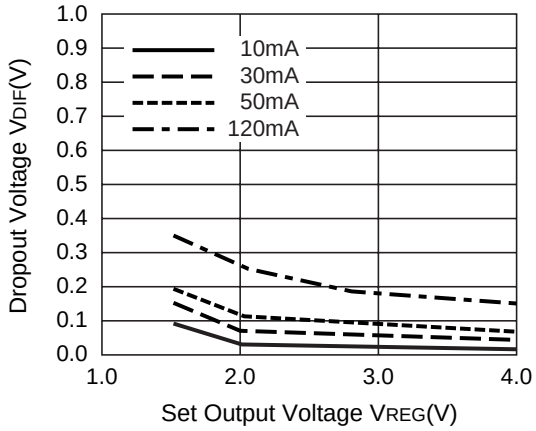

8) Ripple Rejection vs. Frequency

R1141Q151x

VIN=2.5V+0.5Vp-p, CIN=none
COUT=Ceramic 2.2µF

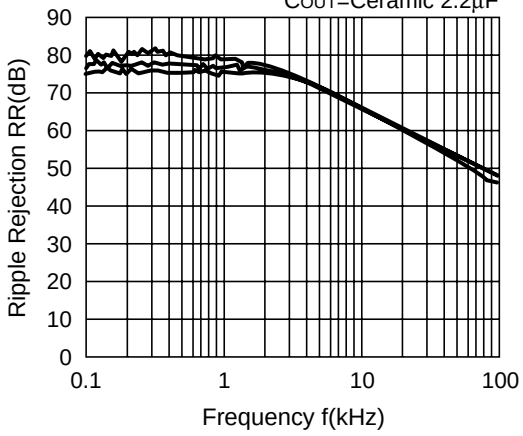

R1141Q281x

VIN=3.8V+0.5Vp-p, CIN=none
COUT=Ceramic 2.2µF

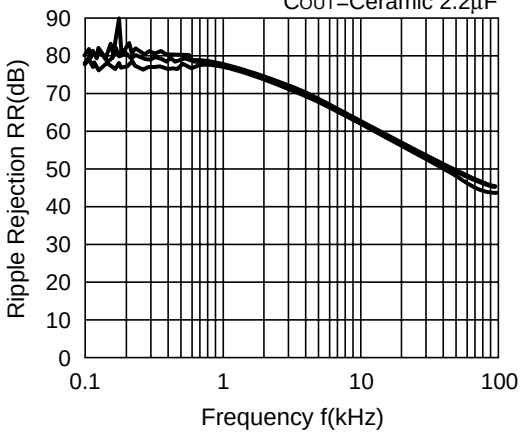

R1141Q401x

VIN=5.0V+0.5Vp-p, CIN=none
COUT=Ceramic 2.2µF

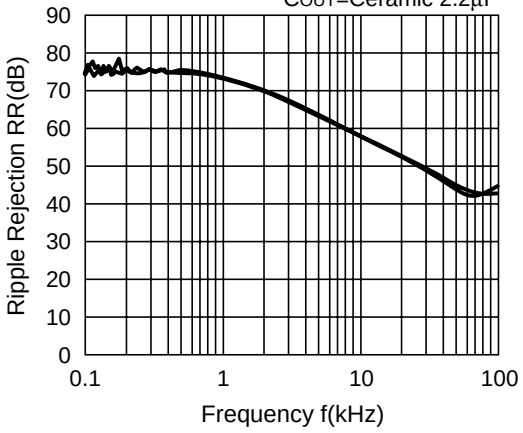

9) Ripple Rejection vs. Input Bias

R1141Q281x

I_{OUT}=1mA, C_{IN}=none,
C_{OUT}=Ceramic 2.2µF

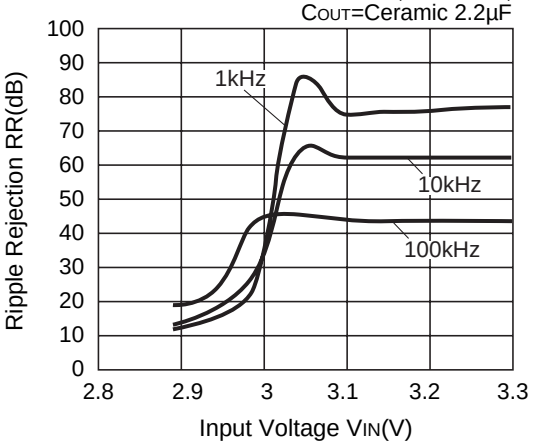

R1141Q281x

I_{OUT}=30mA, C_{IN}=none,
C_{OUT}=Ceramic 2.2µF

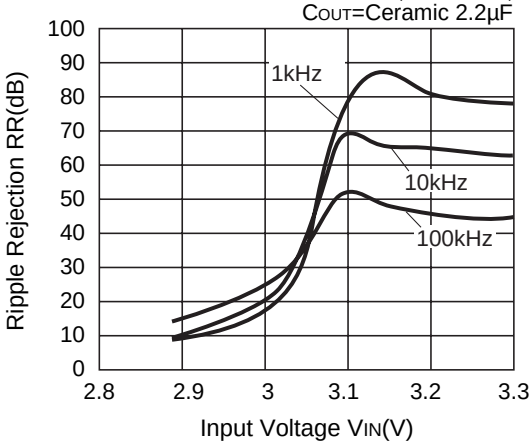

R1141Q281x

I_{OUT}=50mA, C_{IN}=none,
C_{OUT}=Ceramic 2.2µF

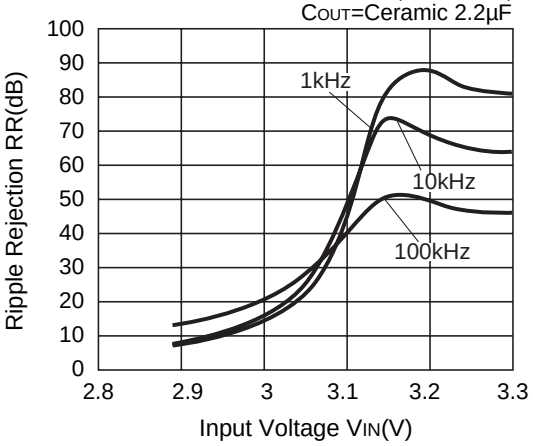

10) Input Transient Response

R1141Q281x

V_{IN}=3.8V to 4.8V, I_{OUT}=30mA, C_{OUT}=Ceramic 1.0µF, T_r=T_f=5.0µs

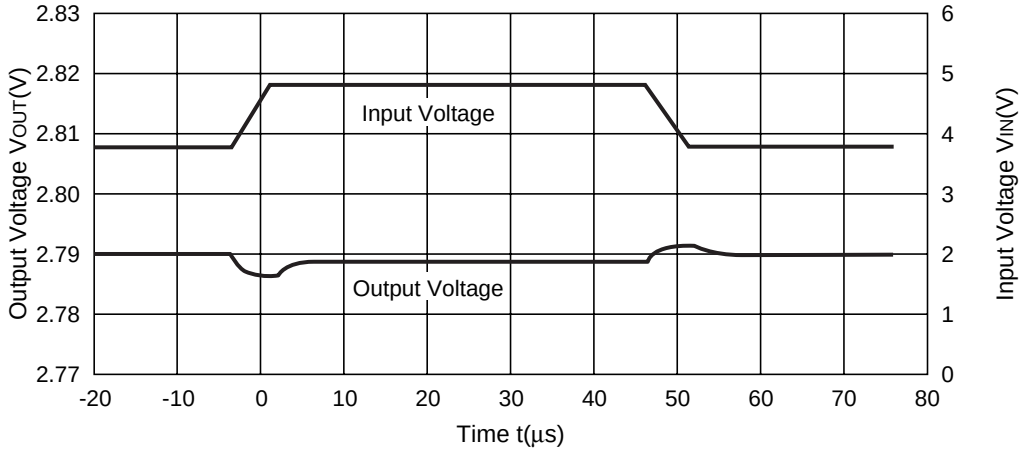

R1141Q281x

V_{IN}=3.8V to 4.8V, I_{OUT}=30mA, C_{OUT}=Ceramic 2.2µF, T_r=T_f=5.0µs

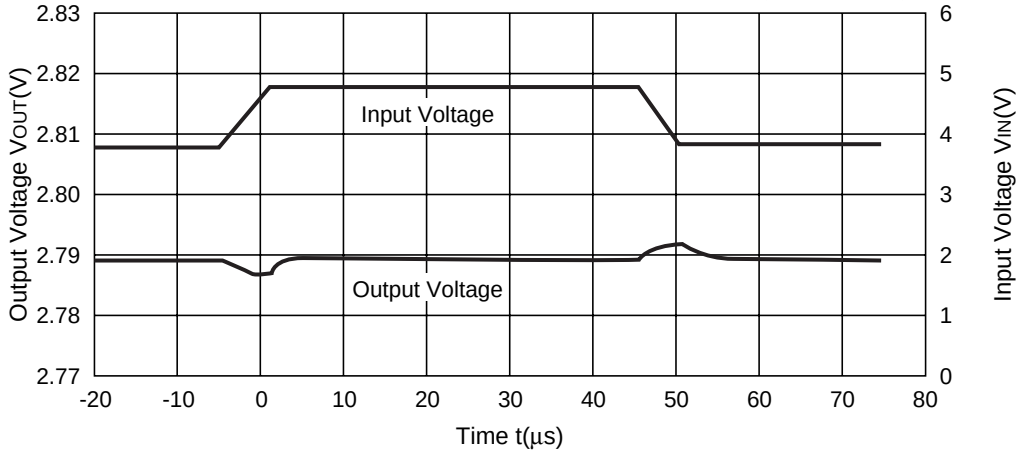

R1141Q281x

V_{IN}=3.8V to 4.8V, I_{OUT}=30mA, C_{OUT}=Ceramic 4.7µF, Tr=Tf=5.0µs

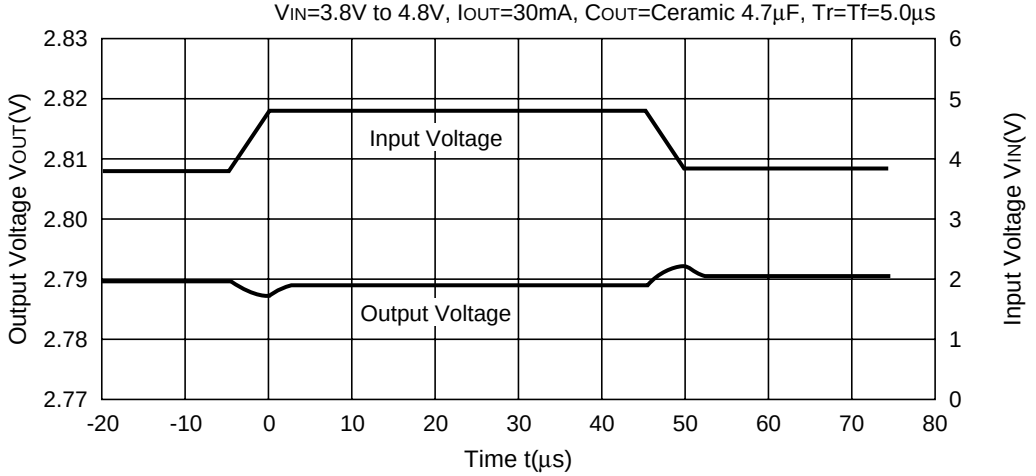

11) Load Transient Response

R1141Q281x

V_{IN}=3.8V, I_{OUT}=50mA→100mA,
C_{IN}=Ceramic 1.0µF C_{OUT}=Ceramic 1.0µF, Tr=Tf=5.0µs

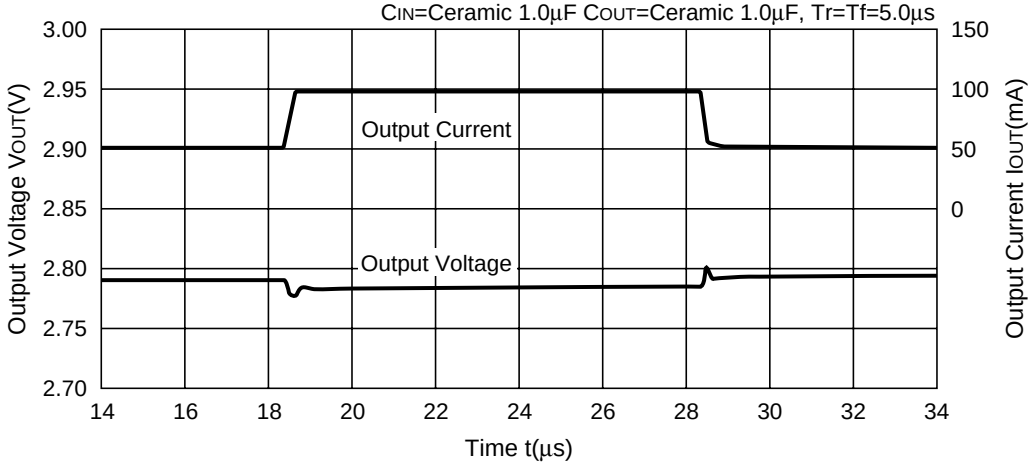

R1141Q281x

V_{IN}=3.8V, I_{OUT}=50mA→100mA,
C_{IN}=Ceramic 1.0µF C_{OUT}=Ceramic 2.2µF, Tr=Tf=5.0µs

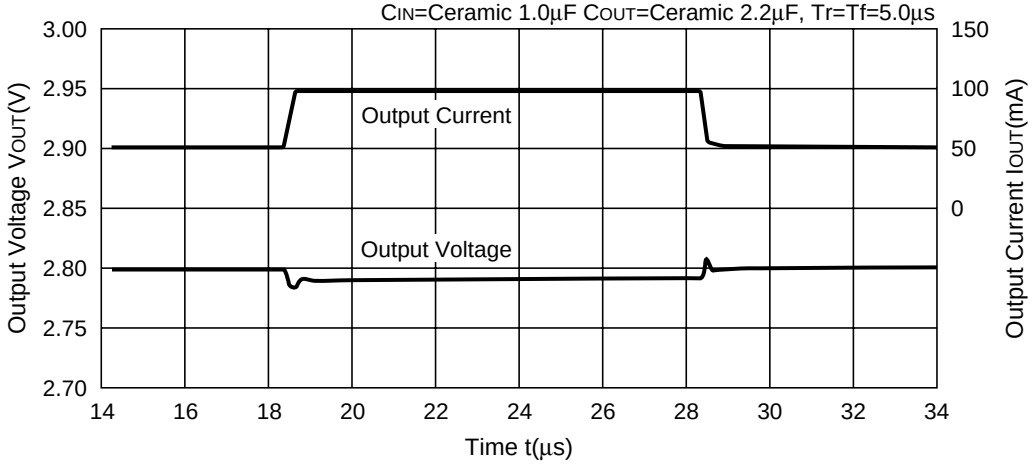

R1141Q281x

V_{IN}=3.8V, I_{OUT}=50mA→100mA,
C_{IN}=Ceramic 1.0µF C_{OUT}=Ceramic 4.7µF, Tr=Tf=5.0µs

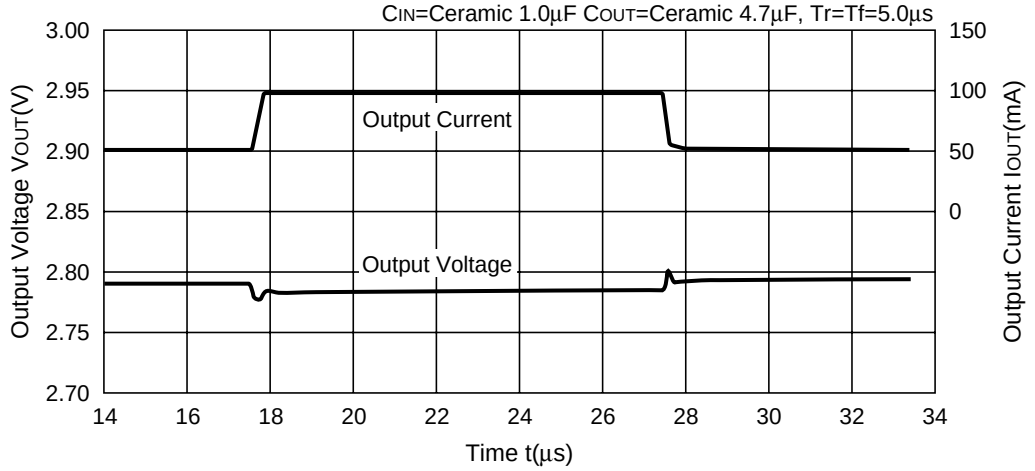

ESR vs. Output Current

When using these ICs, consider the following points:

In these ICs, phase compensation is made for securing stable operation even if the load current is varied. For this purpose, be sure to use a capacitor C_{OUT} with good frequency characteristics and ESR (Equivalent Series Resistance) of which is in the range described as follows:

The relations between I_{OUT} (Output Current) and ESR of Output Capacitor are shown below. The conditions when the white noise level is under 40µV (Avg.) are marked as the hatched area in the graph.

<Test conditions>
(1) $V_{IN}=V_{SET}+1V$
(2) Frequency band: 10Hz to 30MHz
(3) Temperature: 25°C

R1141Q151x

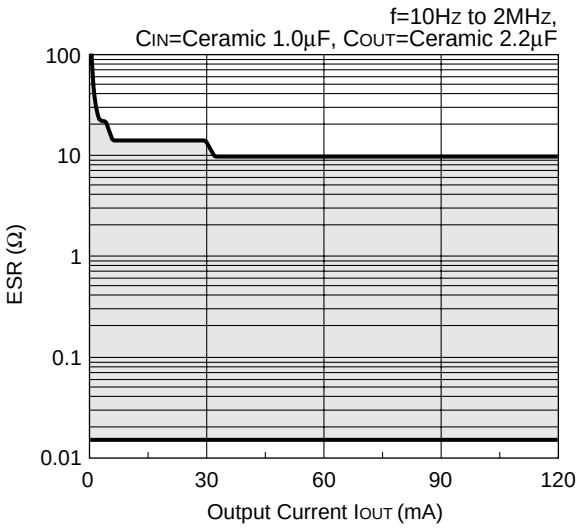

R1141Q281x

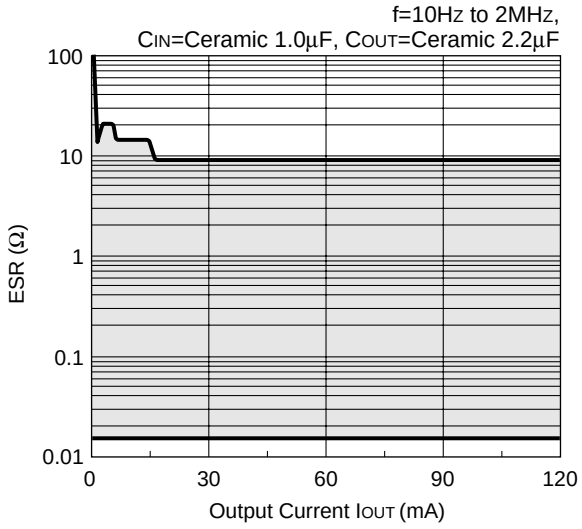

1. The products and the product specifications described in this document are subject to change or discontinuation of production without notice for reasons such as improvement. Therefore, before deciding to use the products, please refer to our sales representatives for the latest information thereon.
2. The materials in this document may not be copied or otherwise reproduced in whole or in part without prior written consent of our company.
3. Please be sure to take any necessary formalities under relevant laws or regulations before exporting or otherwise taking out of your country the products or the technical information described herein.
4. The technical information described in this document shows typical characteristics of and example application circuits for the products. The release of such information is not to be construed as a warranty of or a grant of license under our company's or any third party's intellectual property rights or any other rights.
5. The products listed in this document are intended and designed for use as general electronic components in standard applications (office equipment, telecommunication equipment, measuring instruments, consumer electronic products, amusement equipment etc.). Those customers intending to use a product in an application requiring extreme quality and reliability, for example, in a highly specific application where the failure or misoperation of the product could result in human injury or death (aircraft, spacevehicle, nuclear reactor control system, traffic control system, automotive and transportation equipment, combustion equipment, safety devices, life support system etc.) should first contact us.
6. We are making our continuous effort to improve the quality and reliability of our products, but semiconductor products are likely to fail with certain probability. In order to prevent any injury to persons or damages to property resulting from such failure, customers should be careful enough to incorporate safety measures in their design, such as redundancy feature, fire containment feature and fail-safe feature. We do not assume any liability or responsibility for any loss or damage arising from misuse or inappropriate use of the products.
7. Anti-radiation design is not implemented in the products described in this document.
8. The X-ray exposure can influence functions and characteristics of the products. Confirm the product functions and characteristics in the evaluation stage.
9. WLCSP products should be used in light shielded environments. The light exposure can influence functions and characteristics of the products under operation or storage.
10. There can be variation in the marking when different AOI (Automated Optical Inspection) equipment is used. In the case of recognizing the marking characteristic with AOI, please contact our sales or our distributor before attempting to use AOI.
11. Please contact our sales representatives should you have any questions or comments concerning the products or the technical information.

NISSHINBO

Nisshinbo Micro Devices Inc.

Official website
https://www.nisshinbo-microdevices.co.jp/en/
Purchase information
https://www.nisshinbo-microdevices.co.jp/en/buy/

ENTEGRECİ

Bu belge www.entegreci.com üzerinden sunulmaktadır.

Elektronik komponent tedarikinde Entegreci

Entegreci, Eskişehir merkezli, Türkiye geneline satış yapan bir elektronik komponent mağazasıdır. Entegreler (IC), mikrodenetleyiciler, transistörler, diyotlar, pasif elemanlar, konnektörler, modüller ve geliştirme kartları tek adetten seri üretim adetlerine kadar satılır. Ürün sayfalarında güncel stok durumunu, fiyatı ve datasheet bağlantısını bulabilirsiniz.

Parça koduyla arama

Üretici parça numarasını yazın; stok ve fiyatı hemen görün.

www.entegreci.com

Ürün kategorileri

Entegreden kapasitöre tüm elektronik komponent kategorileri.

Kategorilere göz atın

Üreticiler

Aradığınız üreticinin ürünlerini tek sayfada inceleyin.

Üreticileri görün

Toplu alım ve teklif

Listede olmayan ya da yüksek adetli parçalar için teklif isteyin.

Teklif isteyin

www.entegreci.com | **destek@entegreci.com** | **0850 305 90 34**

Entegreci is an online electronic components store based in Türkiye. Search by manufacturer part number to see stock, prices and datasheets for integrated circuits, microcontrollers, transistors, passive components and connectors, or request a quote for parts that are not listed.

Bu sayfa Entegreci tarafından eklenmiştir. Belgenin önceki sayfaları asıl yayıncısına aittir ve içeriği değiştirilmemiştir; en güncel sürüm için belgenin yayıncısına başvurun.