VOLTAGE REGULATOR (with Wide Input Voltage Range) with RESET

NO.EA-081-250707

OUTLINE

The R1150H series are CMOS-based voltage regulator (VR) ICs equipped with a voltage detector (V_{DET}). VR function of the R1150Hxxxx has features of low dropout voltage, high output voltage accuracy, and ultra-low supply current. Each of the R1150HxxxA series includes also a chip enable circuit. The output of built-in voltage detector is Nch open drain type. The R1150HxxxC/D have a pin for connecting external capacitor to set a certain reset delay time instead of chip enable control pin.

The regulator output voltage and the detector threshold voltage are fixed in the IC, Output Voltage Accuracy is ±2.0%, while Detector Threshold Accuracy is ±2.5%. The R1150HxxxA (with chip enable function) and R1150HxxxC series can supervise input voltage by the built-in detector. R1150HxxxB can supervise SENSE pin voltage by the built-in detector. R1150HxxxD type can supervise V_{OUT} voltage, or Regulator Output Voltage of this IC itself.

Since the package for these ICs is the SOT-89-5 package, high density mounting of the ICs on boards is possible.

FEATURES

- Supply Current ..... Typ. 7.0μA
- Input Voltage ..... Max. 24.0V
- Output Voltage (VR) ..... 2.1V to 14.0V (0.1V steps)
  (For other voltages, please refer to MARK INFORMATIONS.)
- Detector Threshold Voltage (V_{DET}) ..... 2.0V to 15.0V (R1150HxxxB/C/D)
  2.3V to 15.0V (R1150HxxxA)
- Output Voltage Accuracy ..... ±2.0% (VR), ±2.5% (VD)
- Output Current ..... Min. 150mA (V_{OUT}=5.0V)
- Package SOT-89-5
- Built-in Fold-Back Protection Circuit ..... Typ. 45mA (Current at short mode)
- Built-in Thermal Shutdown Circuit (VR) ..... Thermal Shutdown Temperature ; Typ. 150°C
  Released Temperature ; Typ. 120°C
- Monitoring V_{DD} voltage R1150HxxxA/C
- Monitoring sense pin (SENSE) voltage R1150HxxxB
- Monitoring V_{OUT} pin voltage R1150HxxxD

APPLICATIONS

- Power source and Reset circuit for cameras, videos and mobile telecommunication equipment.
- Power source and Reset circuit for battery-operated equipment.
- Power source and Reset circuit for home appliances.

BLOCK DIAGRAMS

R1150HxxxA
With CE pin, V_{IN} detect

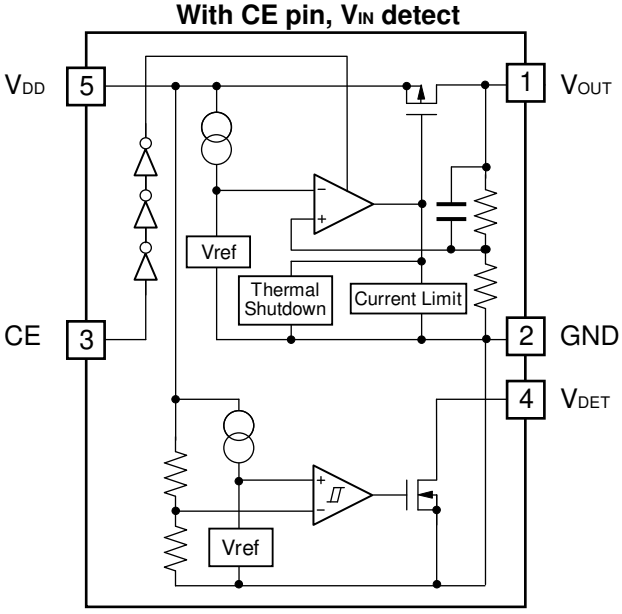

R1150HxxxB
With SENSE pin

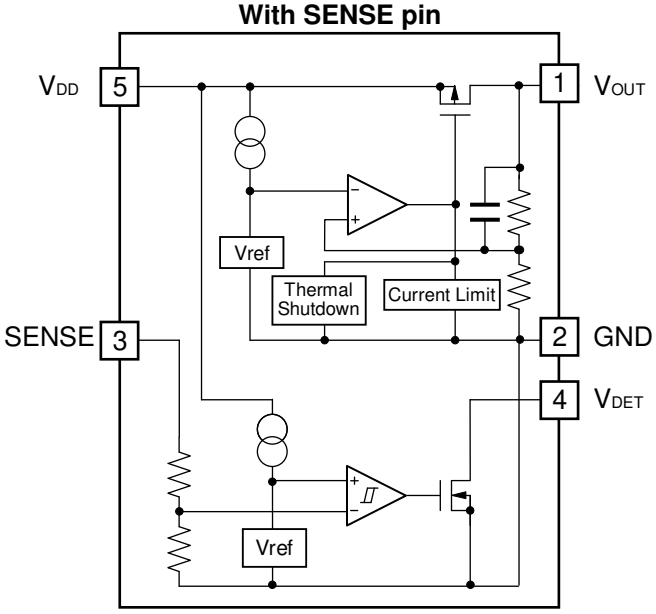

R1150HxxxC
With C_D pin, V_{IN} detect

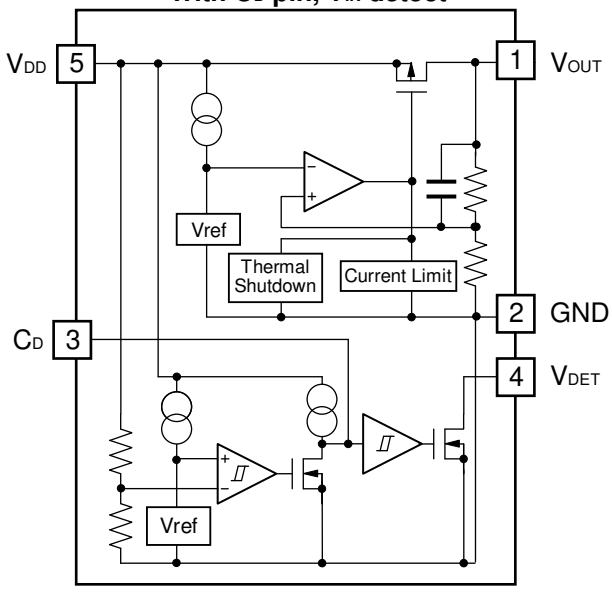

R1150HxxxD
With C_D pin, V_{OUT} detect

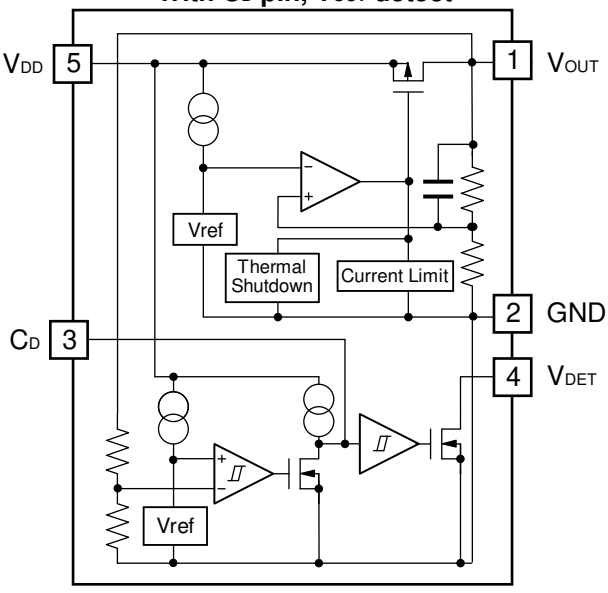

SELECTION GUIDE

The output voltage, detector threshold and the usage of pin No.3 (as a kind of types in the R1150H Series) for the ICs can be selected at the user's request.

Product Name	Package	Quantity per Reel	Pb Free	Halogen Free
R1150Hxxx∗-T1-FE	SOT-89-5	1,000 pcs	Yes	Yes

xxx : Specify a combination of output voltage and detector threshold.

∗ : Designation of the usage of pin No.3 and detector function;
(A) with CE pin and V_{IN} detect
(B) with SENSE pin
(C) with C_D pin and V_{IN} detect
(D) with C_D pin and V_{OUT} detect

PIN CONFIGURATION

● **SOT-89-5**

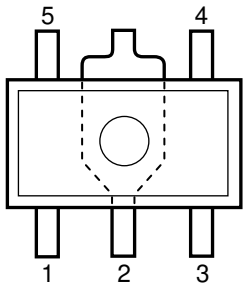

PIN DESCRIPTION

Pin No.	Symbol	Description
1	V_{OUT}	Voltage Regulator Output Pin
2	GND	Ground Pin
3	CE	Chip Enable Pin (A Ver.)
	SENSE	Sense Pin for Voltage Detector (B Ver.)
	C_D	Pin for Capacitor for Setting Output Delay of Voltage Detector (C/D Ver.)
4	V_{DET}	Voltage Detector Output Pin
5	V_{DD}	Input Pin

ABSOLUTE MAXIMUM RATINGS

Symbol	Item			Rating	Unit
V_{IN}	Input Voltage			26.0	V
V_{CE}	Input Voltage (CE Input Pin, A Version)			−0.3 to V_{IN}+0.3	V
V_{SENSE}	Input Voltage (SENSE Input Pin, B Version)			−0.3 to V_{IN}+0.3	V
V_{CD}	Input Voltage (C_D Input Pin, C/D Version)			−0.3 to V_{IN}+0.3	V
V_{DET}	Output Voltage (V_{DET} Output Pin)			−0.3 to 26.0	V
V_{OUT}	Output Voltage			−0.3 to V_{IN}+0.3	V
I_{OUT1}	Output Current (VR)			250	mA
I_{OUT2}	Output Current (VD)			10	mA
P_D	Power Dissipation *	SOT-89-5	JEDEC STD. 51-7	2600	mW
Topt	Operating Temperature			−40 to 85	°C
Tstg	Storage Temperature			−55 to 125	°C

∗) For Power Dissipation, please refer to PACKAGE INFORMATION.

ABSOLUTE MAXIMUM RATINGS

Electronic and mechanical stress momentarily exceeded absolute maximum ratings may cause the permanent damages and may degrade the life time and safety for both device and system using the device in the field.
The functional operation at or over these absolute maximum ratings is not assured.

ELECTRICAL CHARACTERISTICS

- **R1150HxxxA**

Topt=25°C

Symbol	Item	Conditions	Min.	Typ.	Max.	Unit
V_{IN}	Input Voltage				24.0	V
I_{SS}	Supply Current	$V_{IN}=V_{CE}$ $V_{OUT} \geq (-V_{DET})$: $V_{IN}=V_{OUT}+2.0V$ $V_{OUT} < (-V_{DET})$: $V_{IN}=(-V_{DET})+2.0V$		7	14	μA
$I_{standby}$	Standby Current	V_{DD}=24V, V_{CE}=0V	Refer to Supply Current Table			
T_{TSD}	Thermal Shutdown Temperature	Junction Temperature		150		°C
T_{TSR}	Thermal Shutdown Released Temperature	Junction Temperature		120		°C

VR

Topt=25°C

Symbol	Item	Conditions	Min.	Typ.	Max.	Unit
V_{OUT}	Output Voltage	$V_{IN}=V_{OUT}+2.0V$, I_{OUT}=20mA	×0.98		×1.02	V
I_{OUT1}	Output Current	$V_{IN}=V_{OUT}+2.0V$	Refer to Output Current Table			
$\Delta V_{OUT}/\Delta I_{OUT}$	Load Regulation	$V_{IN}=V_{OUT}+2.0V$ 1mA ≤ I_{OUT} ≤ 40mA	Refer to Load Regulation Table			
$\Delta V_{OUT}/\Delta V_{IN}$	Line Regulation	$V_{IN}=V_{OUT}+2.0V$, I_{OUT}=20 mA $V_{OUT}+1V \leq V_{IN} \leq 24V$		0.05	0.15	%/V
V_{DIF}	Dropout Voltage	I_{OUT}=20mA	Refer to Dropout Voltage Table			
$\Delta V_{OUT}/\Delta Topt$	Output Voltage Temperature Coefficient	$V_{IN}=V_{OUT}+2.0V$, I_{OUT}=20mA −40°C ≤ Topt ≤ 85°C		±100		ppm/°C
I_{SC}	Short Current Limit	V_{OUT}=0V		45		mA
V_{CEH}	CE "H" Input Voltage		1.5		V_{IN}	V
V_{CEL}	CE "L" Input Voltage		0		0.25	V

VD

Topt=25°C

Symbol	Item	Conditions	Min.	Typ.	Max.	Unit
$-V_{DET}$	Detector Threshold		×0.975		×1.025	V
V_{HYS}	Detector Threshold Hysteresis		$-V_{DET}$ ×0.03	$-V_{DET}$ ×0.05	$-V_{DET}$ ×0.07	V
I_{OUT2}	Output Current (Driver Output Pin)	Refer to Test Conditions for Output Current Table	0.17			mA
V_{DDL}	Minimum Operating Voltage	*Note 1		0.9	1.2	V
$\Delta -V_{DET}/\Delta Topt$	Detector Threshold Temperature Coefficient	−40°C ≤ Topt ≤ 85°C		±100		ppm/°C
t_{PLH}	Output Delay Time	*Note 2		0.5	1.0	ms

Note 1) This item means V_{DD} Voltage when Output Voltage is equal or less than 0.1V. (Pull-up Resistor=470kW, Pull up Voltage=5V)

Note 2) V_{DET} pin is pulled up to V_{DD} via 470kW. t_{PLH} means time interval from rising edge of V_{DD} from $(-V_{DET})-2.0V$ to $(-V_{DET})+2.0V$ to the point of Output Voltage being 80% of pull-up voltage.

- **Standby Current (Topt=25°C)**

Detector Threshold Voltage $-V_{DET}$ (V)	Supply Current (µA)	
	Typ.	Max.
$2.3V \leq (-V_{DET}) \leq 3.0V$	2.5	5.0
$3.1V \leq (-V_{DET}) \leq 15.0V$	3.0	6.0

VR part

- **Output Current (Topt=25°C)**

Output Voltage V_{OUT} (V)	Output Current (mA)	
	Min.	Typ.
$2.1V \leq V_{OUT} \leq 2.9V$	90	140
$3.0V \leq V_{OUT} \leq 4.0V$	120	170
$4.1V \leq V_{OUT} \leq 14.0V$	150	200

- **Load Regulation (Topt=25°C)**

Output Voltage V_{OUT} (V)	Load Regulation (mV)	
	Typ.	Max.
$2.1V \leq V_{OUT} \leq 3.0V$	15	35
$3.1V \leq V_{OUT} \leq 5.0V$	25	45
$5.1V \leq V_{OUT} \leq 10.0V$	40	65
$10.1V \leq V_{OUT} \leq 14.0V$	50	80

- **Dropout Voltage (Topt=25°C)**

Output Voltage V_{OUT} (V)	Dropout Voltage (V)	
	Typ.	Max.
$2.1V \leq V_{OUT} \leq 2.4V$	0.40	0.60
$2.5V \leq V_{OUT} \leq 3.0V$	0.30	0.40
$3.1V \leq V_{OUT} \leq 7.0V$	0.25	0.35
$7.1V \leq V_{OUT} \leq 10.0V$	0.27	0.45
$10.1V \leq V_{OUT} \leq 14.0V$	0.30	0.50

VD part

- **Test Conditions for Output Current**

Detector Threshold Voltage $-V_{DET}$ (V)	Conditions
$2.3V \leq (-V_{DET}) \leq 15.0V$	V_{IN}=2V, V_{DS}=0.05V

RECOMMENDED OPERATING CONDITIONS (ELECTRICAL CHARACTERISTICS)

All of electronic equipment should be designed that the mounted semiconductor devices operate within the recommended operating conditions. The semiconductor devices cannot operate normally over the recommended operating conditions, even if when they are used over such conditions by momentary electronic noise or surge. And the semiconductor devices may receive serious damage when they continue to operate over the recommended operating conditions.

- **R1150HxxxB**

Topt=25°C

Symbol	Item	Conditions	Min.	Typ.	Max.	Unit
V_{IN}	Input Voltage				24.0	V
I_{SS}	Supply Current	$V_{OUT} \geq (-V_{DET})$: V_{IN}=SENSE=V_{OUT}+2.0V $V_{OUT} < (-V_{DET})$: V_{IN}=SENSE=$(-V_{DET})$+2.0V		7	14	μA
T_{TSD}	Thermal Shutdown Temperature	Junction Temperature		150		°C
T_{TSR}	Thermal Shutdown Temperature	Junction Temperature		120		°C

VR

Topt=25°C

Symbol	Item	Conditions	Min.	Typ.	Max.	Unit
V_{OUT}	Output Voltage	V_{IN}=V_{OUT}+2.0V I_{OUT}=20mA	×0.98		×1.02	V
I_{OUT1}	Output Current	V_{IN}=V_{OUT}+2.0V	Refer to Output Current Table			
$\Delta V_{OUT}/\Delta I_{OUT}$	Load Regulation	V_{IN}=V_{OUT}+2.0V 1mA ≤ I_{OUT} ≤ 40mA	Refer to Load Regulation Table			
$\Delta V_{OUT}/\Delta V_{IN}$	Line Regulation	I_{OUT}=20mA V_{OUT}+1V ≤ V_{IN} ≤ 24V		0.05	0.15	%/V
V_{DIF}	Dropout Voltage	I_{OUT}=20mA	Refer to Dropout Voltage Table			
$\Delta V_{OUT}/\Delta Topt$	Output Voltage Temperature Coefficient	V_{IN}=V_{OUT}+2.0V I_{OUT}=20mA −40°C ≤ Topt ≤ 85°C		±100		ppm/°C
I_{SC}	Short Current Limit	V_{OUT}=0V		45		mA

VD

Topt=25°C

Symbol	Item	Conditions	Min.	Typ.	Max.	Unit
$-V_{DET}$	Detector Threshold		×0.975		×1.025	V
V_{HYS}	Detector Threshold Hysteresis		$-V_{DET}$ ×0.03	$-V_{DET}$ ×0.05	$-V_{DET}$ ×0.07	V
I_{OUT2}	Output Current (Driver Output Pin)	Refer to Test Conditions for Output Current Table	0.17			mA
V_{DDL}	Minimum Operating Voltage	*Note 1		0.9	1.2	V
$\Delta -V_{DET}/\Delta Topt$	Detector Threshold Temperature Coefficient	−40°C ≤ Topt ≤ 85°C		±100		ppm/°C
t_{PLH}	Output Delay Time	*Note 2		1.0	1.5	ms

Note 1) This item means V_{DD} Voltage when Output Voltage is equal or less than 0.1V. (Pull-up Resistor=470kW, Pull up Voltage=5V)

Note 2) V_{DET} pin is pulled up to V_{DD} via 470kW. t_{PLH} means time interval from rising edge of V_{DD} from $(-V_{DET})$−2.0V to $(-V_{DET})$+2.0V to the point of Output Voltage being 80% of pull-up voltage.

- **Output Current (Topt=25°C)**

Output Voltage V_{OUT} (V)	Output Current (mA)	
	Min.	Typ.
2.1V ≤ V_{OUT} ≤ 2.9V	90	140
3.0V ≤ V_{OUT} ≤ 4.0V	120	170
4.1V ≤ V_{OUT} ≤ 14.0V	150	200

VR part

- **Load Regulation (Topt=25°C)**

Output Voltage V_{OUT} (V)	Load Regulation (mV)	
	Typ.	Max.
2.1V ≤ V_{OUT} ≤ 3.0V	15	35
3.1V ≤ V_{OUT} ≤ 5.0V	25	45
5.1V ≤ V_{OUT} ≤ 10.0V	40	65
10.1V ≤ V_{OUT} ≤ 14.0V	50	80

- **Dropout Voltage (Topt=25°C)**

Output Voltage V_{OUT} (V)	Dropout Voltage (V)	
	Typ.	Max.
2.1V ≤ V_{OUT} ≤ 2.4V	0.40	0.60
2.5V ≤ V_{OUT} ≤ 3.0V	0.30	0.40
3.1V ≤ V_{OUT} ≤ 7.0V	0.25	0.35
7.1V ≤ V_{OUT} ≤ 10.0V	0.27	0.45
10.1V ≤ V_{OUT} ≤ 14.0V	0.30	0.50

VD part

- **Test Conditions for Output Current**

Detector Threshold Voltage $-V_{DET}$ (V)	Conditions
2.1V ≤ ($-V_{DET}$) ≤ 15.0V	V_{IN}=2V, V_{DS}=0.05V
($-V_{DET}$)=2.0	V_{IN}=1.9V, V_{DS}=0.05V

RECOMMENDED OPERATING CONDITIONS (ELECTRICAL CHARACTERISTICS)

All of electronic equipment should be designed that the mounted semiconductor devices operate within the recommended operating conditions. The semiconductor devices cannot operate normally over the recommended operating conditions, even if when they are used over such conditions by momentary electronic noise or surge. And the semiconductor devices may receive serious damage when they continue to operate over the recommended operating conditions.

- **R1150HxxxC**

Topt=25°C

Symbol	Item	Conditions	Min.	Typ.	Max.	Unit
V_{IN}	Input Voltage				24.0	V
I_{SS}	Supply Current	$V_{OUT} \geq (-V_{DET})$:$V_{IN}=V_{OUT}+2.0V$ $V_{OUT} < (-V_{DET})$:$V_{IN}=(-V_{DET})+2.0V$		7	14	µA
T_{TSD}	Thermal Shutdown Temperature	Junction Temperature		150		°C
T_{TSR}	Thermal Shutdown Released Temperature	Junction Temperature		120		°C

VR

Topt=25°C

Symbol	Item	Conditions	Min.	Typ.	Max.	Unit
V_{OUT}	Output Voltage	$V_{IN}=V_{OUT}+2.0V$ $I_{OUT}=20mA$	×0.98		×1.02	V
I_{OUT1}	Output Current	$V_{IN}=V_{OUT}+2.0V$	Refer to Output Current Table			
$\Delta V_{OUT}/\Delta I_{OUT}$	Load Regulation	$V_{IN}=V_{OUT}+2.0V$ $1mA \leq I_{OUT} \leq 40mA$	Refer to Load Regulation Table			
$\Delta V_{OUT}/\Delta V_{IN}$	Line Regulation	$I_{OUT}=20mA$ $V_{OUT}+1V \leq V_{IN} \leq 24V$		0.05	0.15	%/V
V_{DIF}	Dropout Voltage	$I_{OUT}=20mA$	Refer to Dropout Voltage Table			
$\Delta V_{OUT}/\Delta Topt$	Output Voltage Temperature Coefficient	$V_{IN}=V_{OUT}+2.0V$ $I_{OUT}=20mA$ $-40°C \leq Topt \leq 85°C$		±100		ppm/°C
I_{SC}	Short Current Limit	$V_{OUT}=0V$		45		mA

VD

Topt=25°C

Symbol	Item	Conditions	Min.	Typ.	Max.	Unit
$-V_{DET}$	Detector Threshold		×0.975		×1.025	V
V_{HYS}	Detector Threshold Hysteresis		$-V_{DET}$ ×0.03	$-V_{DET}$ ×0.05	$-V_{DET}$ ×0.07	V
I_{OUT2}	Output Current (Driver Output Pin)	Refer to Test Conditions for Output Current Table	0.17			mA
V_{DDL}	Minimum Operating Voltage	*Note 1		0.9	1.2	V
$\Delta -V_{DET}/\Delta Topt$	Detector Threshold Temperature Coefficient	$-40°C \leq Topt \leq 85°C$		±100		ppm/°C
t_{PLH}	Output Delay Time	$C_D=4.7nF$, *Note 2	20	30	50	ms

Note 1) This item means V_{DD} Voltage when Output Voltage is equal or less than 0.1V.
(Pull-up Resistor=470kW, Pull up Voltage=5V)
Note 2) V_{DET} pin is pulled up to V_{DD} via 470kW. t_{PLH} means time interval from rising edge of V_{DD} from $(-V_{DET})-2.0V$ to $(-V_{DET})+2.0V$ to the point of Output Voltage being 80% of pull-up voltage.

- **Output Current (Topt=25°C)**

Output Voltage V_{OUT} (V)	Output Current (mA)	
	Min.	Typ.
2.1V ≤ V_{OUT} ≤ 2.9V	90	140
3.0V ≤ V_{OUT} ≤ 4.0V	120	170
4.1V ≤ V_{OUT} ≤ 14.0V	150	200

- **Load Regulation (Topt=25°C)**

Output Voltage V_{OUT} (V)	Load Regulation (mV)	
	Typ.	Max.
2.1V ≤ V_{OUT} ≤ 3.0V	15	35
3.1V ≤ V_{OUT} ≤ 5.0V	25	45
5.1V ≤ V_{OUT} ≤ 10.0V	40	65
10.1V ≤ V_{OUT} ≤ 14.0V	50	80

- **Dropout Voltage (Topt=25°C)**

Output Voltage V_{OUT} (V)	Dropout Voltage (V)	
	Typ.	Max.
2.1V ≤ V_{OUT} ≤ 2.4V	0.40	0.60
2.5V ≤ V_{OUT} ≤ 3.0V	0.30	0.40
3.1V ≤ V_{OUT} ≤ 7.0V	0.25	0.35
7.1V ≤ V_{OUT} ≤ 10.0V	0.27	0.45
10.1V ≤ V_{OUT} ≤ 14.0V	0.30	0.50

- **Test Conditions for Output Current**

Detector Threshold Voltage $-V_{DET}$ (V)	Conditions
2.1V ≤ ($-V_{DET}$) ≤ 15.0V	V_{IN}=2V, V_{DS}=0.05V
($-V_{DET}$)=2.0	V_{IN}=1.9V, V_{DS}=0.05V

RECOMMENDED OPERATING CONDITIONS (ELECTRICAL CHARACTERISTICS)

All of electronic equipment should be designed that the mounted semiconductor devices operate within the recommended operating conditions. The semiconductor devices cannot operate normally over the recommended operating conditions, even if when they are used over such conditions by momentary electronic noise or surge. And the semiconductor devices may receive serious damage when they continue to operate over the recommended operating conditions.

- **R1150HxxxD**

Topt=25°C

Symbol	Item	Conditions	Min.	Typ.	Max.	Unit
V_{IN}	Input Voltage				24.0	V
I_{SS}	Supply Current	$V_{IN}=V_{OUT}+2.0V$		7	14	µA
T_{SD}	Thermal Shutdown Temperature			150		°C
T_{SR}	Thermal Shutdown Released Temperature	Junction Temperature		120		°C

VR

Topt=25°C

Symbol	Item	Conditions	Min.	Typ.	Max.	Unit
V_{OUT}	Output Voltage	$V_{IN}=V_{OUT}+2.0V$ $I_{OUT}=20mA$	×0.98		×1.02	V
I_{OUT}	Output Current	$V_{IN}=V_{OUT}+2.0V$	Refer to Output Current Table			
$\Delta V_{OUT}/\Delta I_{OUT}$	Load Regulation	$V_{IN}=V_{OUT}+2.0V$ $1mA \le I_{OUT} \le 40mA$	Refer to Load Regulation Table			
$\Delta V_{OUT}/\Delta V_{IN}$	Line Regulation	$I_{OUT}=20mA$ $V_{OUT}+1V \le V_{IN} \le 24V$		0.05	0.15	%/V
V_{DIF}	Dropout Voltage	$I_{OUT}=20mA$	Refer to Dropout Voltage Table			
$\Delta V_{OUT}/\Delta Topt$	Output Voltage Temperature Coefficient	$V_{IN}=V_{OUT}+2.0V$ $I_{OUT}=20mA$ $-40°C \le Topt \le 85°C$		±100		ppm/°C
I_{SC}	Short Current Limit	$V_{OUT}=0V$		45		mA

VD

Topt=25°C

Symbol	Item	Conditions	Min.	Typ.	Max.	Unit
$-V_{DET}$	Detector Threshold		×0.975		×1.025	V
V_{HYS}	Detector Threshold Hysteresis		$-V_{DET}$ ×0.03	$-V_{DET}$ ×0.05	$-V_{DET}$ ×0.07	V
I_{OUT2}	Output Current (Driver Output Pin)	Refer to Test Conditions for Output Current Table	0.17			mA
V_{DDL}	Minimum Operating Voltage	*Note 1		0.9	1.2	V
$\Delta -V_{DET}/\Delta Topt$	Detector Threshold Temperature Coefficient	$-40°C \le Topt \le 85°C$		±100		ppm/°C
t_{PLH}	Output Delay Time	$C_D=4.7nF$, *Note 2	20	30	50	ms
	Release Margin	$V_{OUT}-0.2-(-V_{DET})-V_{HYS}$	50			mV

Note 1) This item means V_{DD} Voltage when Output Voltage is equal or less than 0.1V.
(Pull-up Resistor=470kW, Pull up Voltage=5V)
Note 2) V_{DET} pin is pulled up to V_{DD} via 470kW. t_{PLH} means time interval from rising edge of V_{DD} from $(-V_{DET})-2.0V$ to $(-V_{DET})+2.0V$ to the point of Output Voltage being 80% of pull-up voltage.

- **Output Current (Topt=25°C)**

Output Voltage V_{OUT} (V)	Output Current (mA)	
	Min.	Typ.
2.1V ≤ V_{OUT} ≤ 2.9V	90	140
3.0V ≤ V_{OUT} ≤ 4.0V	120	170
4.1V ≤ V_{OUT} ≤ 14.0V	150	200

- **Load Regulation (Topt=25°C)**

Output Voltage V_{OUT} (V)	Load Regulation (mV)	
	Typ.	Max.
2.1V ≤ V_{OUT} ≤ 3.0V	15	35
3.1V ≤ V_{OUT} ≤ 5.0V	25	45
5.1V ≤ V_{OUT} ≤ 10.0V	40	65
10.1V ≤ V_{OUT} ≤ 14.0V	50	80

- **Dropout Voltage (Topt=25°C)**

Output Voltage V_{OUT} (V)	Dropout Voltage (V)	
	Typ.	Max.
2.1V ≤ V_{OUT} ≤ 2.4V	0.40	0.60
2.5V ≤ V_{OUT} ≤ 3.0V	0.30	0.40
3.1V ≤ V_{OUT} ≤ 7.0V	0.25	0.35
7.1V ≤ V_{OUT} ≤ 10.0V	0.27	0.45
10.1V ≤ V_{OUT} ≤ 14.0V	0.30	0.50

- **Test Conditions for Output Current**

Detector Threshold Voltage $-V_{DET}$ (V)	Conditions
2.1V ≤ ($-V_{DET}$) ≤ 15.0V	V_{IN}=2V, V_{DS}=0.05V
($-V_{DET}$)=2.0	V_{IN}=1.9V, V_{DS}=0.05V

RECOMMENDED OPERATING CONDITIONS (ELECTRICAL CHARACTERISTICS)

All of electronic equipment should be designed that the mounted semiconductor devices operate within the recommended operating conditions. The semiconductor devices cannot operate normally over the recommended operating conditions, even if when they are used over such conditions by momentary electronic noise or surge. And the semiconductor devices may receive serious damage when they continue to operate over the recommended operating conditions.

Product-specific Electrical Characteristics

VR Section (Topt = 25°C)

Product Name	V_{OUT} [V]			I_{OUT} [mA]		$\Delta V_{OUT}/\Delta I_{OUT}$ [mV]		V_{DIF} [V]	
	Min.	Typ.	Max.	Min.	Typ.	Typ.	Max.	Typ.	Max.
R1150H002x	3.234	3.300	3.366	120	170	25	45	0.25	0.35
R1150H003x	4.900	5.000	5.100	150	200	25	45	0.25	0.35
R1150H004x	2.450	2.500	2.550	90	140	15	35	0.3	0.4
R1150H005x	3.234	3.300	3.366	120	170	25	45	0.25	0.35
R1150H006x	4.900	5.000	5.100	150	200	25	45	0.25	0.35
R1150H007x	3.430	3.500	3.570	120	170	25	45	0.25	0.35
R1150H008x	3.234	3.300	3.366	120	170	25	45	0.25	0.35
R1150H009x	4.900	5.000	5.100	150	200	25	45	0.25	0.35
R1150H010x	2.940	3.000	3.060	120	170	15	35	0.3	0.4
R1150H011x	6.860	7.000	7.140	150	200	40	65	0.25	0.35
R1150H012x	11.760	12.000	12.240	150	200	50	80	0.3	0.5
R1150H013x	7.350	7.500	7.650	150	200	40	65	0.27	0.45
R1150H014x	7.350	7.500	7.650	150	200	40	65	0.27	0.45
R1150H015x	2.940	3.000	3.060	120	170	15	35	0.3	0.4
R1150H016x	4.900	5.000	5.100	150	200	25	45	0.25	0.35
R1150H018x	4.900	5.000	5.100	150	200	25	45	0.25	0.35
R1150H019x	13.720	14.000	14.280	150	200	50	80	0.3	0.5
R1150H020x	4.900	5.000	5.100	150	200	25	45	0.25	0.35
R1150H021x	3.528	3.600	3.672	120	170	25	45	0.25	0.35
R1150H022x	3.234	3.300	3.366	120	170	25	45	0.25	0.35
R1150H023x	11.760	12.000	12.240	150	200	50	80	0.3	0.5
R1150H024x	3.234	3.300	3.366	120	170	25	45	0.25	0.35
R1150H025x	3.920	4.000	4.080	120	170	25	45	0.25	0.35
R1150H026x	3.234	3.300	3.366	120	170	25	45	0.25	0.35
R1150H027x	3.528	3.600	3.672	120	170	25	45	0.25	0.35
R1150H028x	4.900	5.000	5.100	150	200	25	45	0.25	0.35
R1150H029x	3.528	3.600	3.672	120	170	25	45	0.25	0.35
R1150H030x	3.234	3.300	3.366	120	170	25	45	0.25	0.35
R1150H031x	3.234	3.300	3.366	120	170	25	45	0.25	0.35
R1150H032x	3.332	3.400	3.468	120	170	25	45	0.25	0.35
R1150H033x	3.038	3.100	3.162	120	170	25	45	0.25	0.35
R1150H034x	4.900	5.000	5.100	150	200	25	45	0.25	0.35
R1150H035x	3.234	3.300	3.366	120	170	25	45	0.25	0.35
R1150H036x	3.234	3.300	3.366	120	170	25	45	0.25	0.35
R1150H037x	2.450	2.500	2.550	90	140	15	35	0.3	0.4
R1150H038x	4.900	5.000	5.100	150	200	25	45	0.25	0.35
R1150H039x	3.234	3.300	3.366	120	170	25	45	0.25	0.35

VR Section (Topt = 25°C)

Product Name	V_{OUT} [V]			I_{OUT} [mA]		$\Delta V_{OUT}/\Delta I_{OUT}$ [mV]		V_{DIF} [V]	
	Min.	Typ.	Max.	Min.	Typ.	Typ.	Max.	Typ.	Max.
R1150H040x	3.234	3.300	3.366	120	170	25	45	0.25	0.35
R1150H041x	6.860	7.000	7.140	150	200	40	65	0.25	0.35
R1150H042x	5.488	5.600	5.712	150	200	40	65	0.25	0.35
R1150H043x	8.820	9.000	9.180	150	200	40	65	0.27	0.45
R1150H044x	7.840	8.000	8.160	150	200	40	65	0.27	0.45
R1150H045x	4.900	5.000	5.100	150	200	25	45	0.25	0.35
R1150H046x	5.488	5.600	5.712	150	200	40	65	0.25	0.35
R1150H047x	11.760	12.000	12.240	150	200	50	80	0.3	0.5
R1150H048x	4.900	5.000	5.100	150	200	25	45	0.25	0.35
R1150H049x	2.793	2.850	2.907	90	140	15	35	0.3	0.4
R1150H050x	5.292	5.400	5.508	150	200	40	65	0.25	0.35
R1150H051x	3.234	3.300	3.366	120	170	25	45	0.25	0.35
R1150H052x	3.234	3.300	3.366	120	170	25	45	0.25	0.35

VD Section (Topt = 25°C)

Product Name	$-V_{DET}$ [V]			V_{HYS} [V]		
	Min.	Typ.	Max.	Min.	Typ.	Max.
R1150H002x	2.438	2.500	2.563	0.075	0.125	0.175
R1150H003x	4.193	4.300	4.408	0.129	0.215	0.301
R1150H004x	2.243	2.300	2.358	0.069	0.115	0.161
R1150H005x	2.828	2.900	2.973	0.087	0.145	0.203
R1150H006x	4.388	4.500	4.613	0.135	0.225	0.315
R1150H007x	3.023	3.100	3.178	0.093	0.155	0.217
R1150H008x	4.095	4.200	4.305	0.126	0.210	0.294
R1150H009x	3.998	4.100	4.203	0.123	0.205	0.287
R1150H010x	4.095	4.200	4.305	0.126	0.210	0.294
R1150H011x	2.730	2.800	2.870	0.084	0.140	0.196
R1150H012x	4.583	4.700	4.818	0.141	0.235	0.329
R1150H013x	4.193	4.300	4.408	0.129	0.215	0.301
R1150H014x	4.583	4.700	4.818	0.141	0.235	0.329
R1150H015x	2.438	2.500	2.563	0.075	0.125	0.175
R1150H016x	3.413	3.500	3.588	0.105	0.175	0.245
R1150H018x	2.925	3.000	3.075	0.090	0.150	0.210
R1150H019x	14.625	15.000	15.375	0.450	0.750	1.050
R1150H020x	4.095	4.200	4.305	0.126	0.210	0.294
R1150H021x	4.193	4.300	4.408	0.129	0.215	0.301
R1150H022x	2.730	2.800	2.870	0.084	0.140	0.196
R1150H023x	4.095	4.200	4.305	0.126	0.210	0.294
R1150H024x	3.510	3.600	3.690	0.108	0.180	0.252
R1150H025x	4.875	5.000	5.125	0.150	0.250	0.350

VD Section (Topt = 25°C)

Product Name	$-V_{DET}$ [V]			V_{HYS} [V]		
	Min.	Typ.	Max.	Min.	Typ.	Max.
R1150H026x	2.243	2.300	2.358	0.069	0.115	0.161
R1150H027x	8.775	9.000	9.225	0.270	0.450	0.630
R1150H028x	2.048	2.100	2.153	0.063	0.105	0.147
R1150H029x	7.605	7.800	7.995	0.234	0.390	0.546
R1150H030x	2.145	2.200	2.255	0.066	0.110	0.154
R1150H031x	1.950	2.000	2.050	0.060	0.100	0.140
R1150H032x	1.950	2.000	2.050	0.060	0.100	0.140
R1150H033x	4.388	4.500	4.613	0.135	0.225	0.315
R1150H034x	12.675	13.000	13.325	0.390	0.650	0.910
R1150H035x	3.705	3.800	3.895	0.114	0.190	0.266
R1150H036x	5.460	5.600	5.740	0.168	0.280	0.392
R1150H037x	3.998	4.100	4.203	0.123	0.205	0.287
R1150H038x	2.243	2.300	2.358	0.069	0.115	0.161
R1150H039x	6.630	6.800	6.970	0.204	0.340	0.476
R1150H040x	4.875	5.000	5.125	0.150	0.250	0.350
R1150H041x	7.313	7.500	7.688	0.225	0.375	0.525
R1150H042x	4.388	4.500	4.613	0.135	0.225	0.315
R1150H043x	9.653	9.900	10.148	0.297	0.495	0.693
R1150H044x	8.678	8.900	9.123	0.267	0.445	0.623
R1150H045x	5.460	5.600	5.740	0.168	0.280	0.392
R1150H046x	2.925	3.000	3.075	0.090	0.150	0.210
R1150H047x	4.875	5.000	5.125	0.150	0.250	0.350
R1150H048x	7.313	7.500	7.688	0.225	0.375	0.525
R1150H049x	4.388	4.500	4.613	0.135	0.225	0.315
R1150H050x	2.925	3.000	3.075	0.090	0.150	0.210
R1150H051x	9.750	10.000	10.250	0.300	0.500	0.700
R1150H052x	7.313	7.500	7.688	0.225	0.375	0.525

TEST CIRCUITS

- **R1150HxxxA**

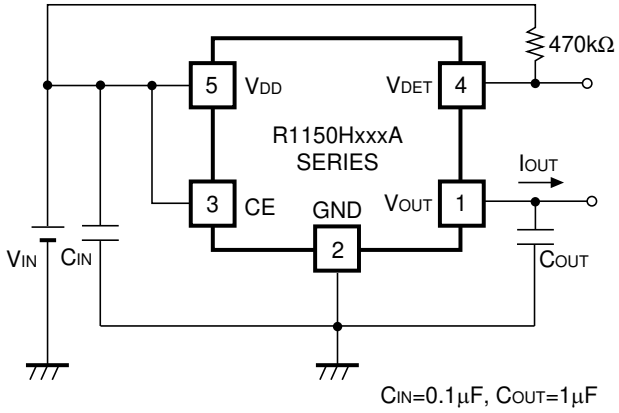

Standard Test Circuit

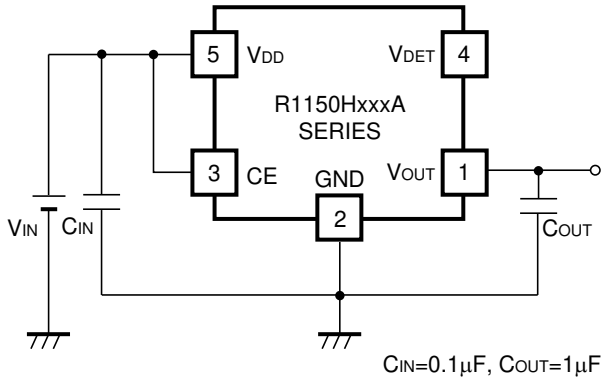

Supply Current Test Circuit

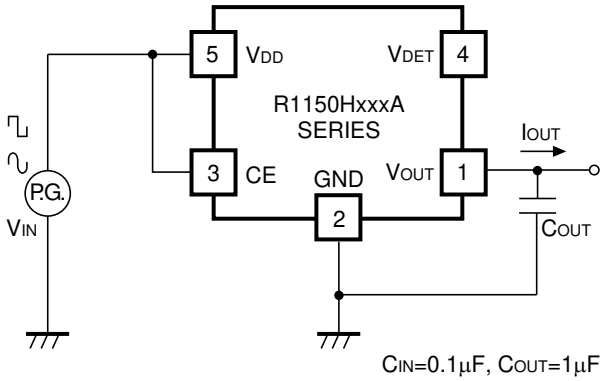

Input Transient Response/
Ripple Rejection Test Circuit

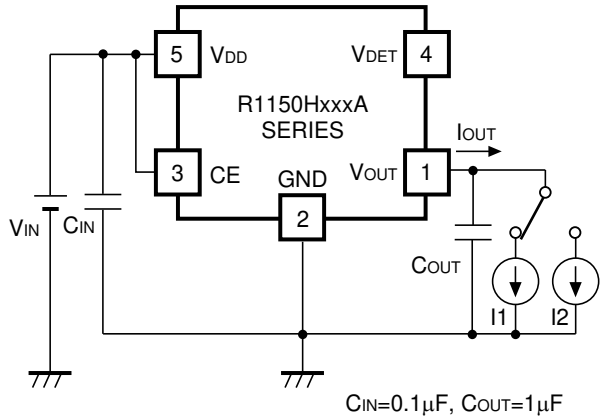

Load Transient Response Test Circuit

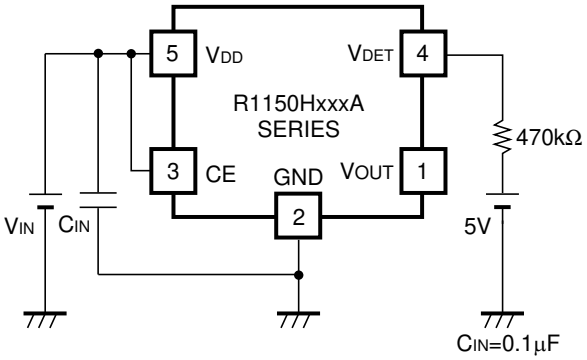

Minimum Operating Voltage Test Circuit

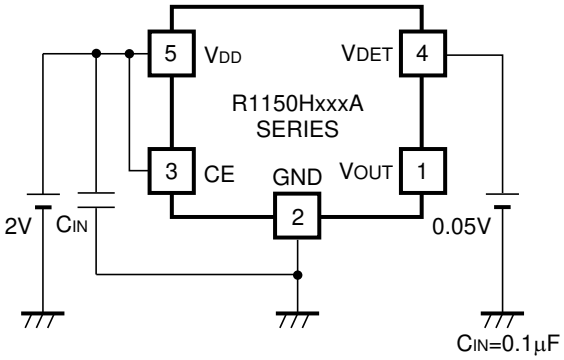

VD Output Current Test Circuit

- **R1150HxxxB**

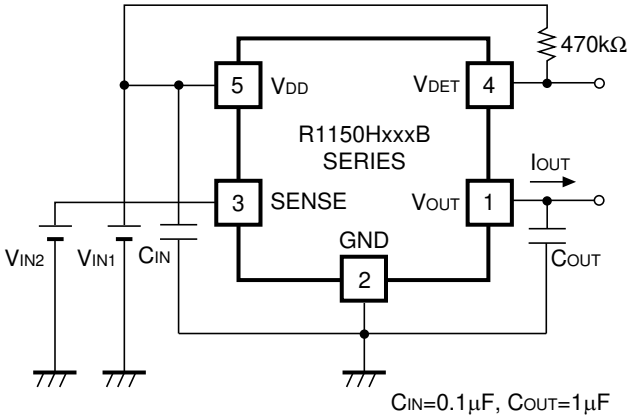

Standard Test Circuit

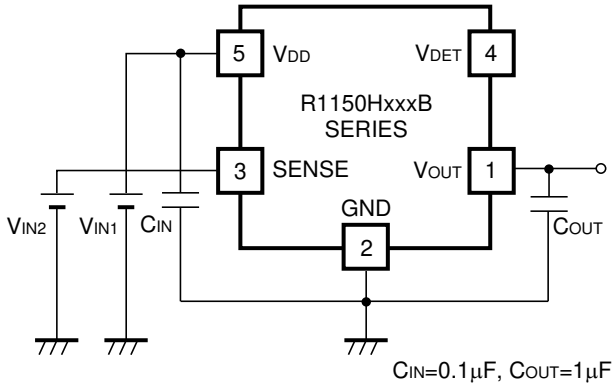

Supply Current Test Circuit

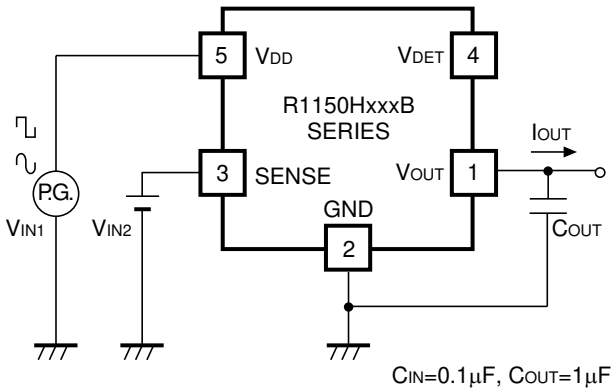

Input Transient Response/
Ripple Rejection Test Circuit

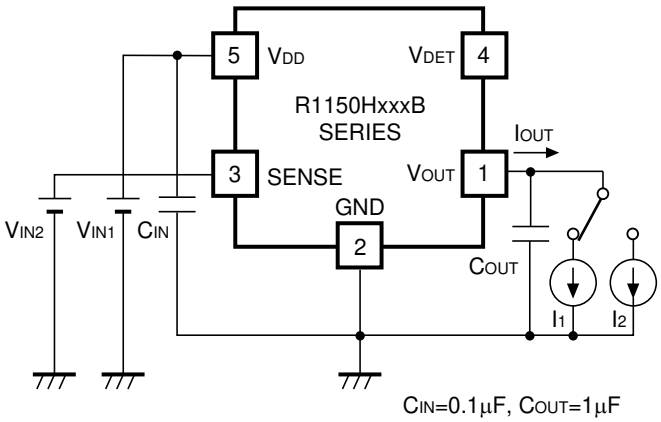

Load Transient Response Test Circuit

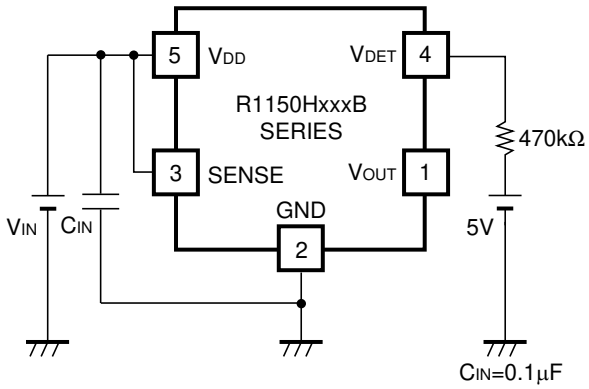

VDET Minimum Operating Voltage Test Circuit

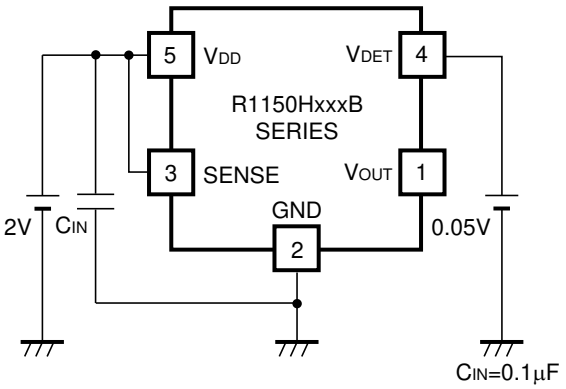

VD Output Current Test Circuit

- **R1150HxxxC/D**

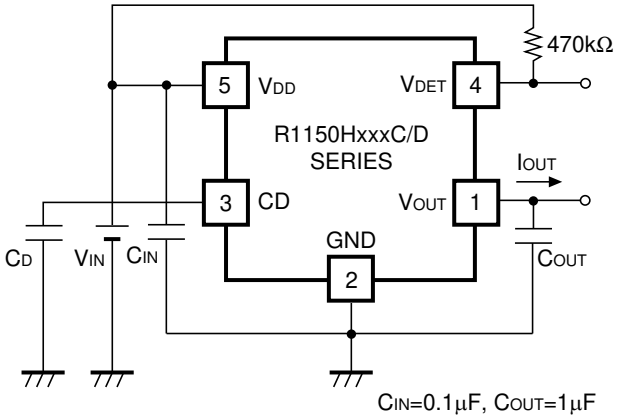

Standard Test Circuit

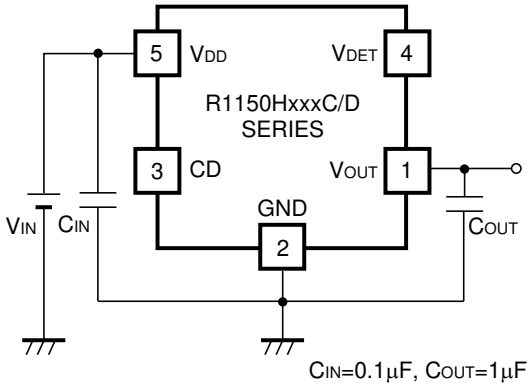

Supply Current Test Circuit

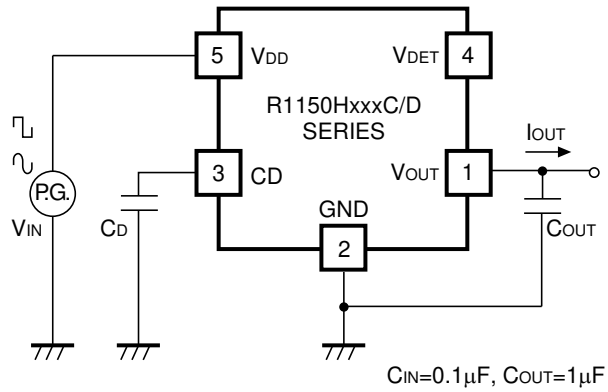

Input Transient Response/
Ripple Rejection Test Circuit

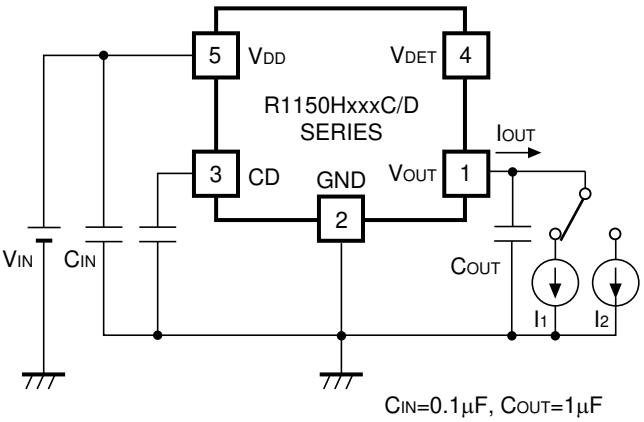

Load Transient Response Test Circuit

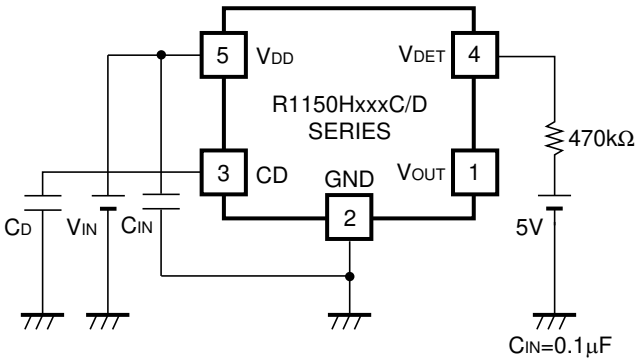

V_{DET} Minimum Operating Voltage Test Circuit

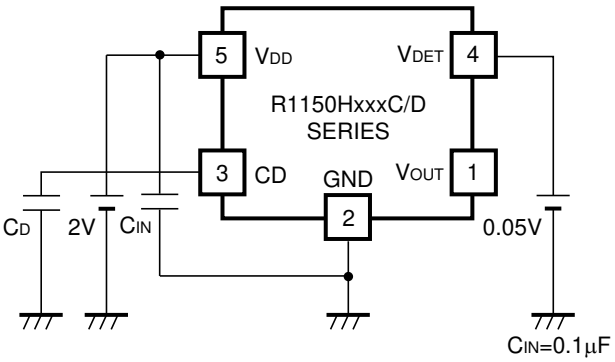

VD Output Current Test Circuit

TYPICAL CHARACTERISTICS

1) Output Voltage vs. Temperature

R1150H (VR=3.0V)

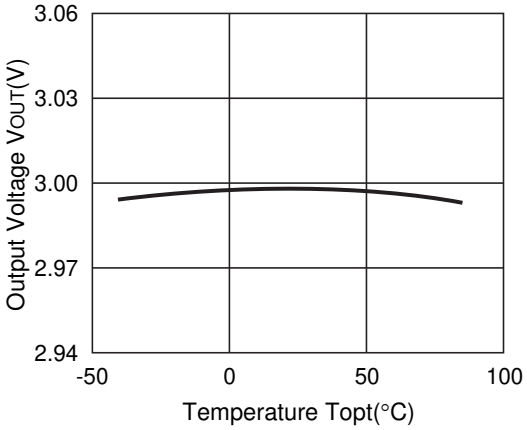

R1150H (VR=5.0V)

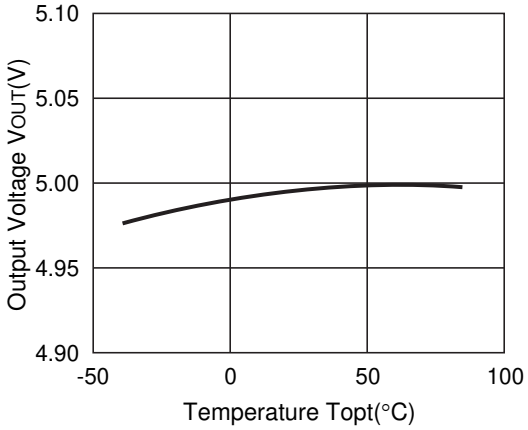

R1150H (VR=10.0V)

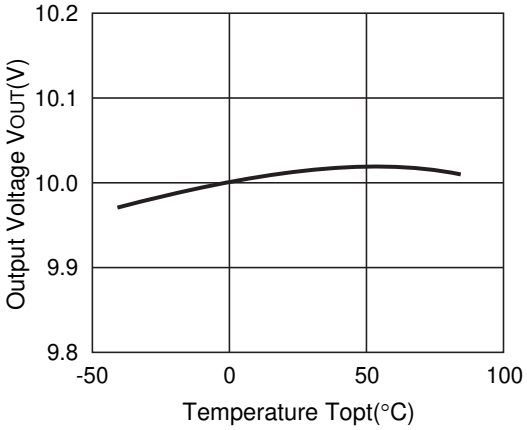

2) Output Voltage vs. Input Voltage

R1150H (VR=3.0V)

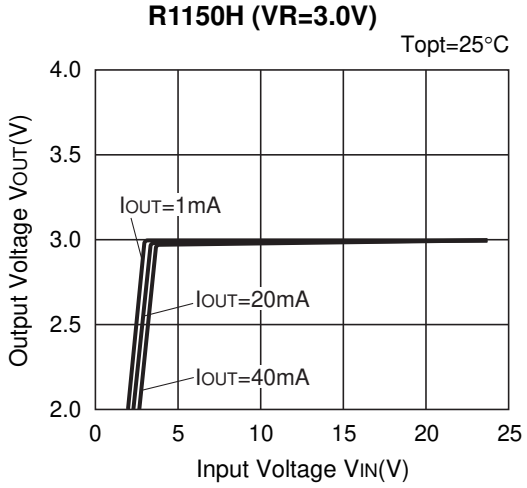

R1150H (VR=5.0V)

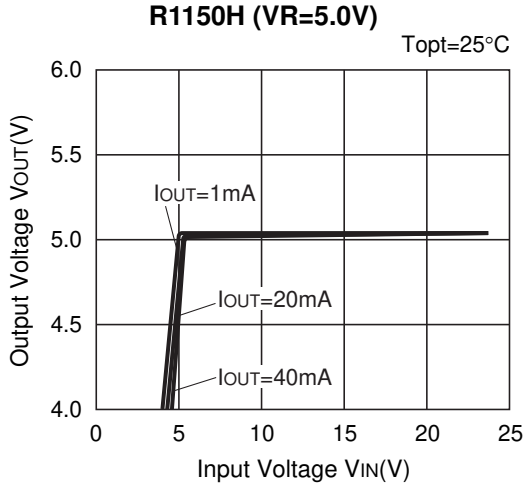

R1150H (VR=10.0V)

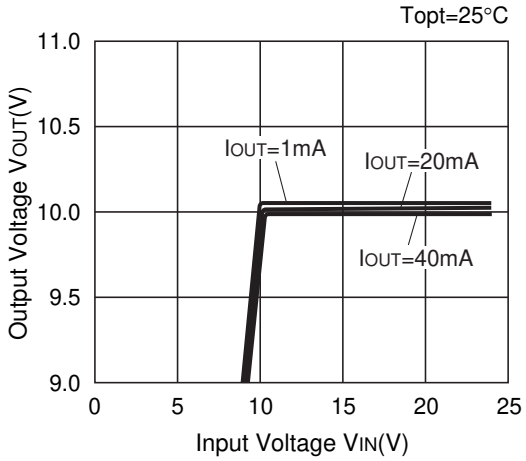

3) Output Voltage vs. Output Current

R1150H (VR=3.0V)

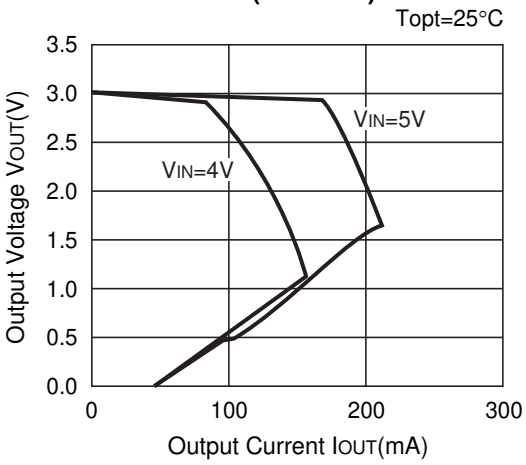

R1150H (VR=5.0V)

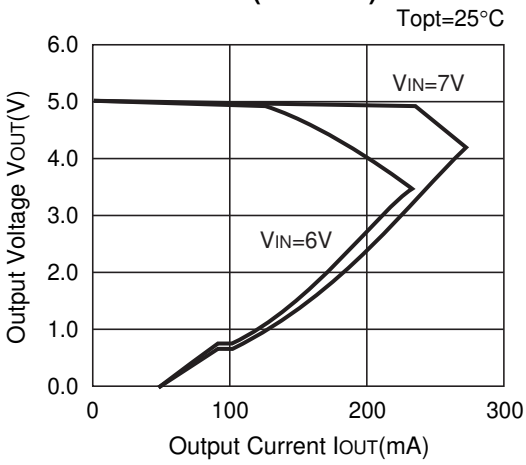

R1150H (VR=10.0V)

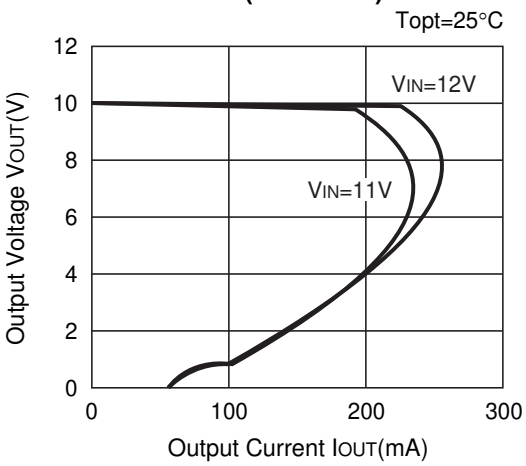

4) Dropout Voltage vs. Output Current

R1150H (VR=3.0V)

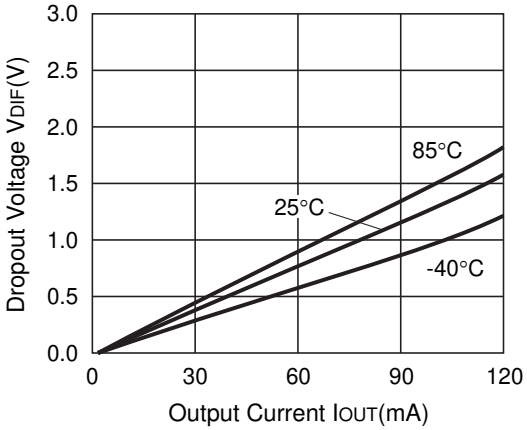

R1150H (VR=5.0V)

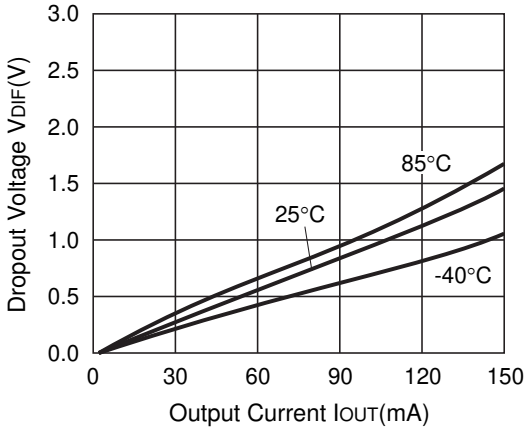

R1150H (VR=10.0V)

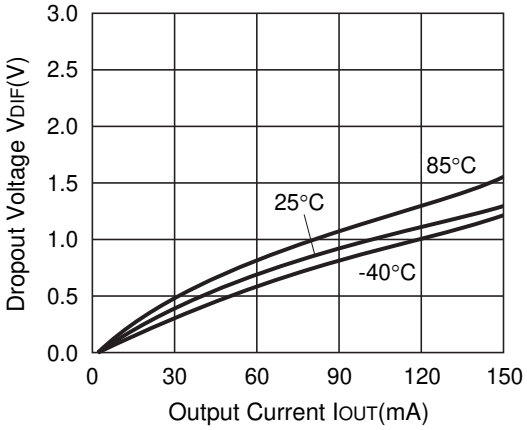

5) Supply Current vs. Input Voltage

R1150H (VR=3.0V)

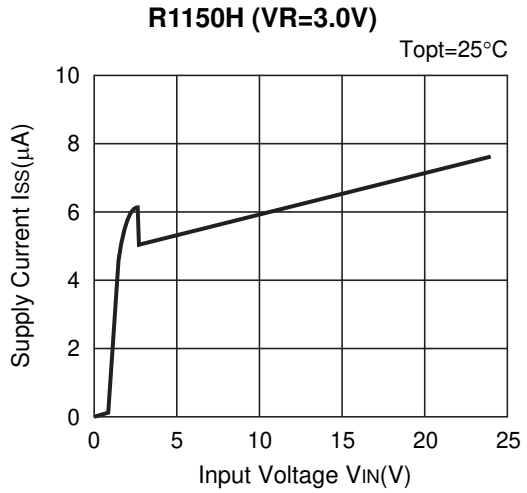

R1150H (VR=5.0V)

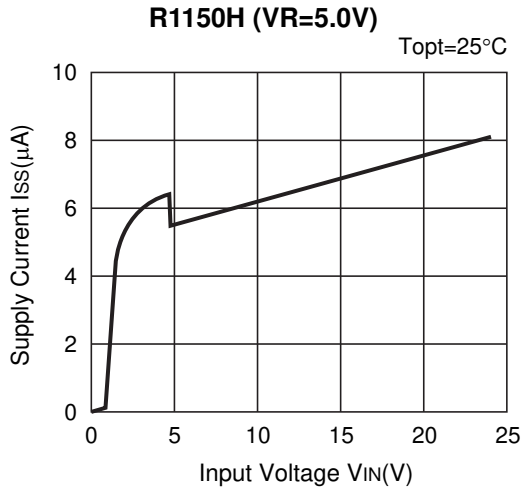

R1150H (VR=10.0V)

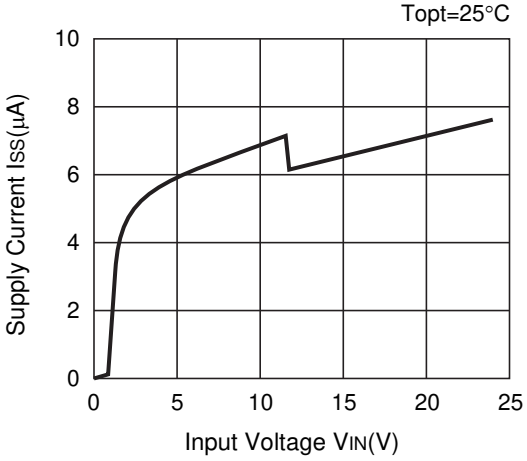

6) Supply Current vs. Temperature

R1150H (VR=3.0V, V_{DET}=2.5V)

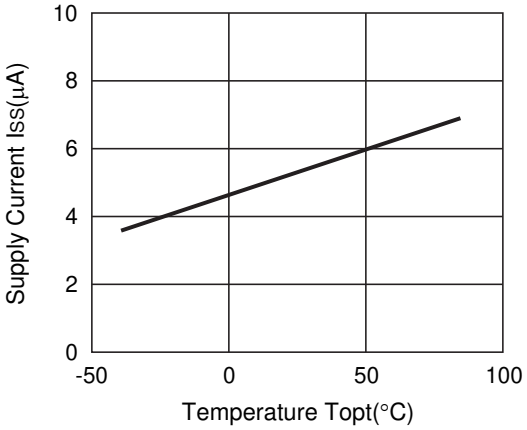

R1150H (VR=5.0V, V_{DET}=4.5V)

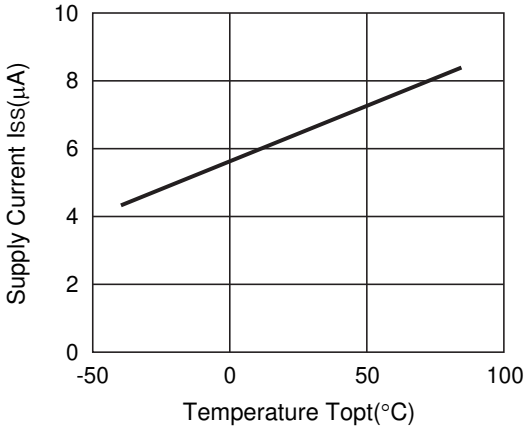

R1150H (VR=10.0V, V_{DET}=11.0V)

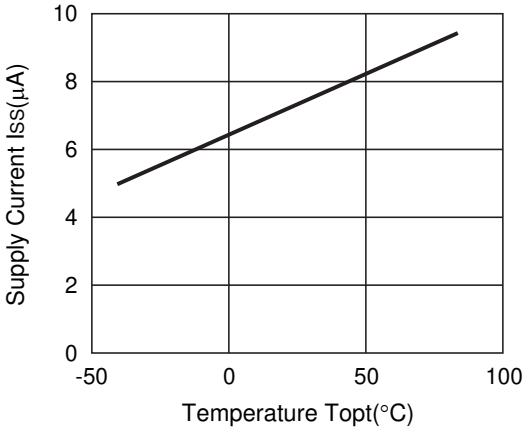

7) Ripple Rejection vs. Frequency

R1150H (VR=3.0V)

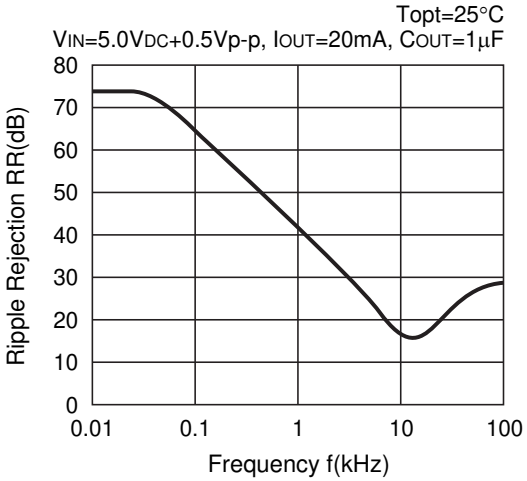

R1150H (VR=5.0V)

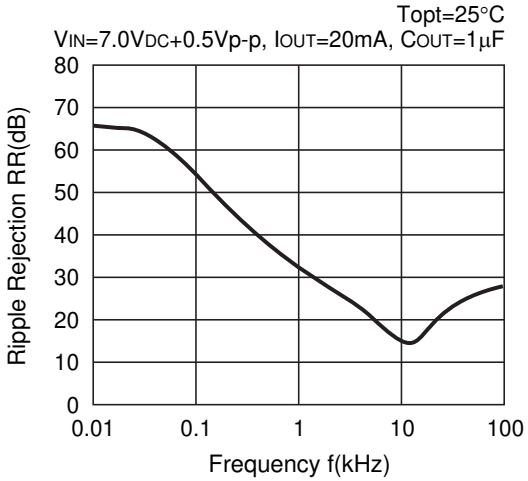

R1150H (VR=10.0V)

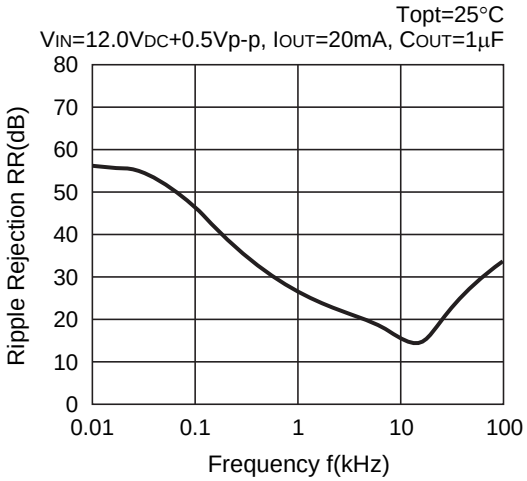

8) Input Transient Response

R1150H (VR=3.0V)

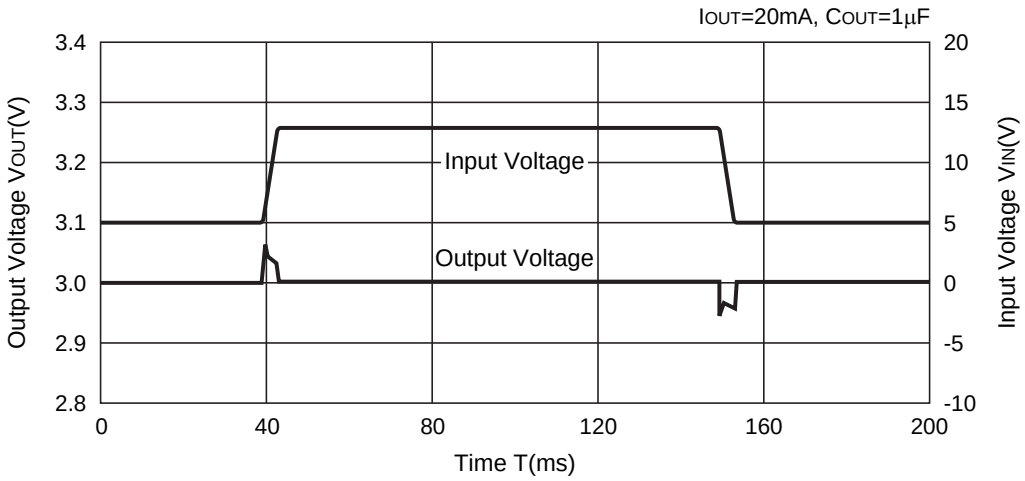

R1150H (VR=5.0V)

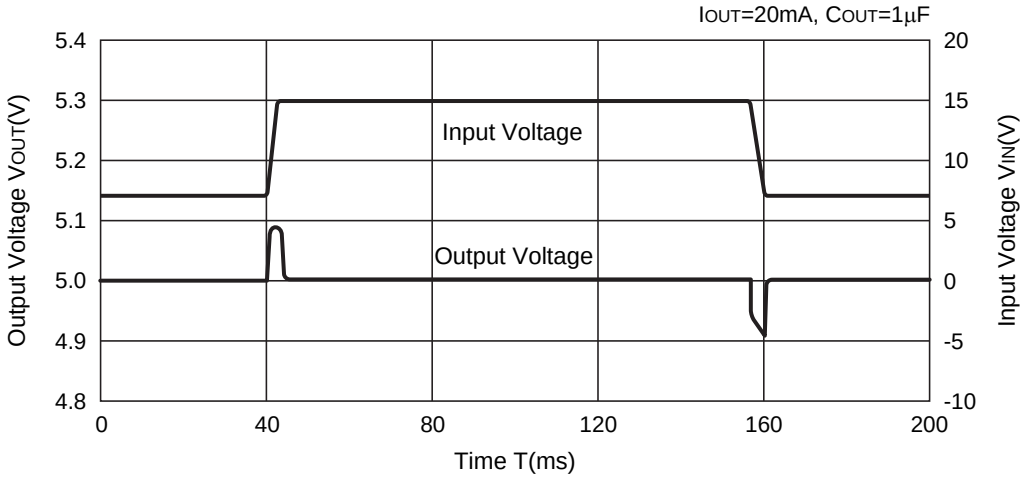

R1150H (VR=10.0V)

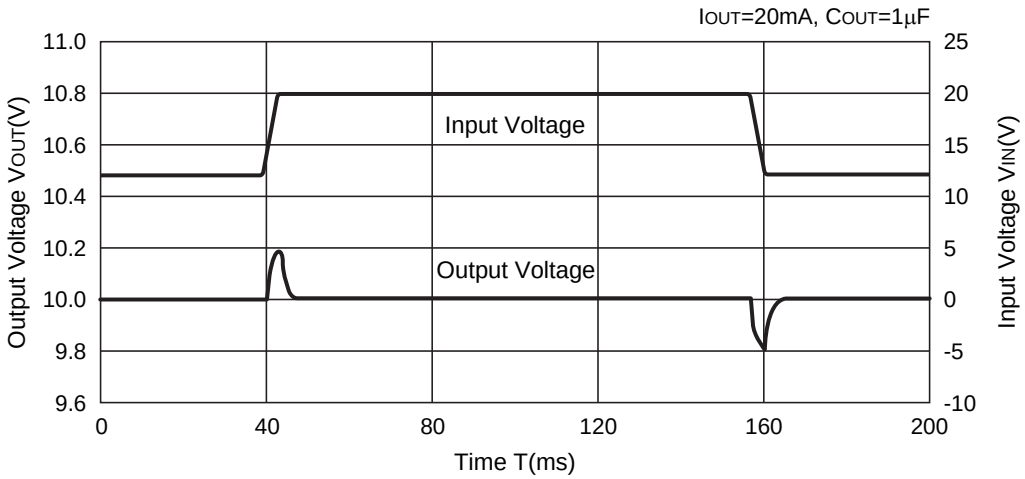

9) Load Transient Response

R1150H (VR=3.0V)

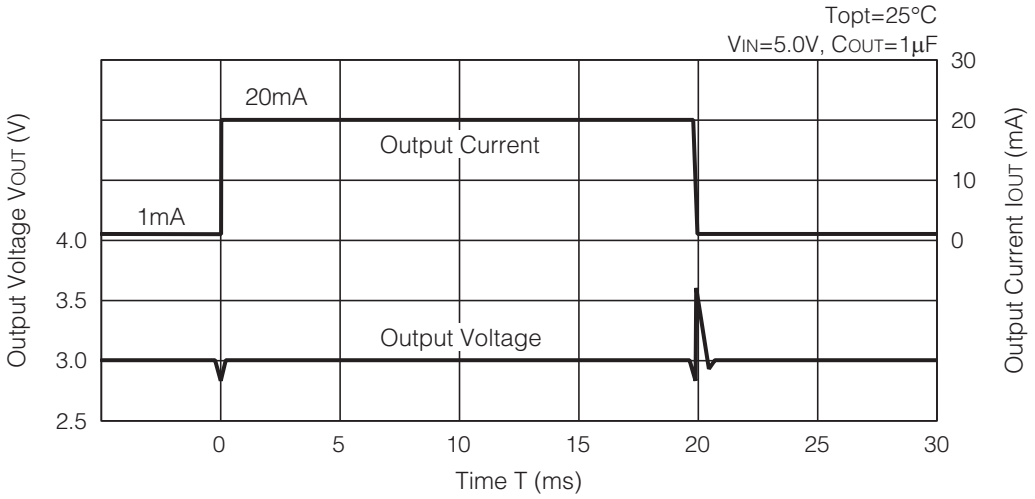

R1150H (VR=5.0V)

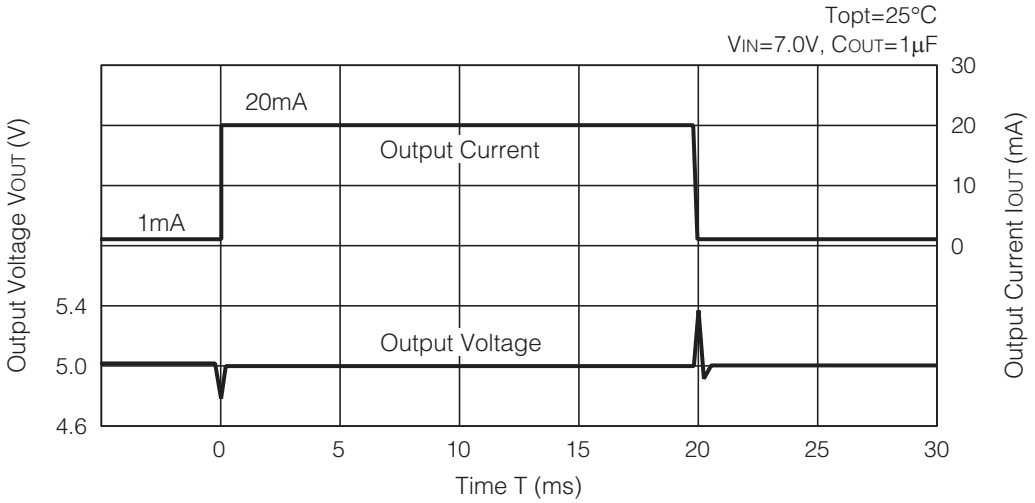

R1150H (VR=10.0V)

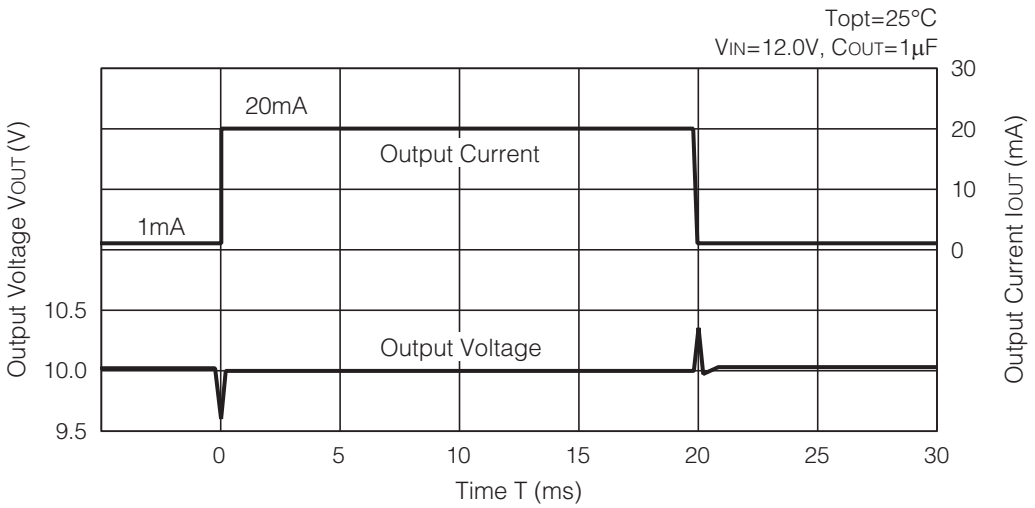

10) Detector Threshold vs. Temperature

R1150H (-V_{DET}=4.5V)

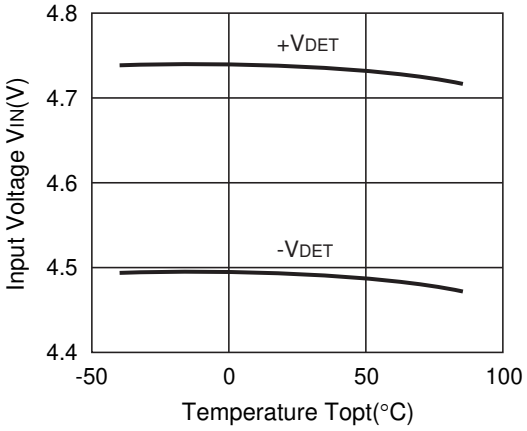

R1150H (-V_{DET}=11.0V)

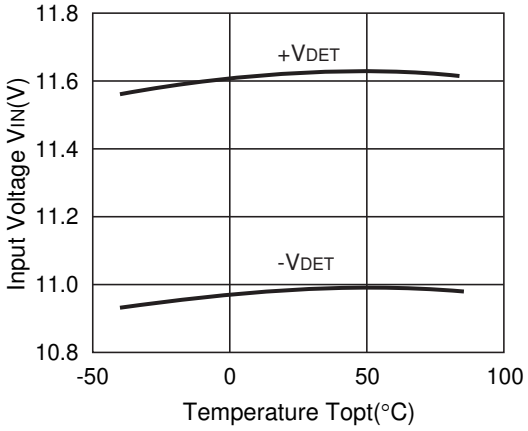

11) Detector Threshold vs. Input Voltage

R1150H (-V_{DET}=4.5V)

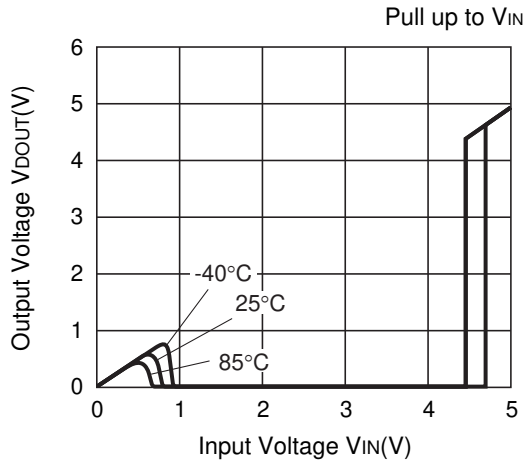

R1150H (-V_{DET}=4.5V)

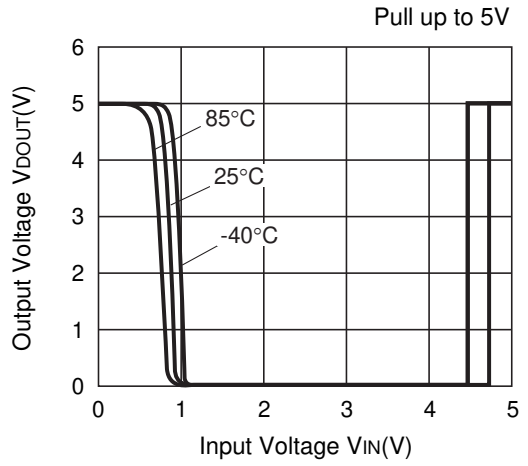

R1150H (-V_{DET}=11.0V)

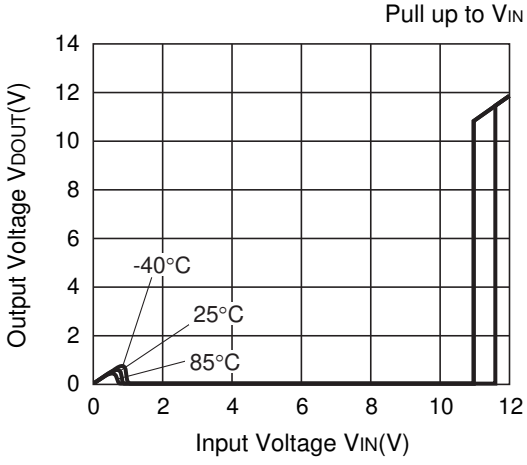

R1150H (-V_{DET}=11.0V)

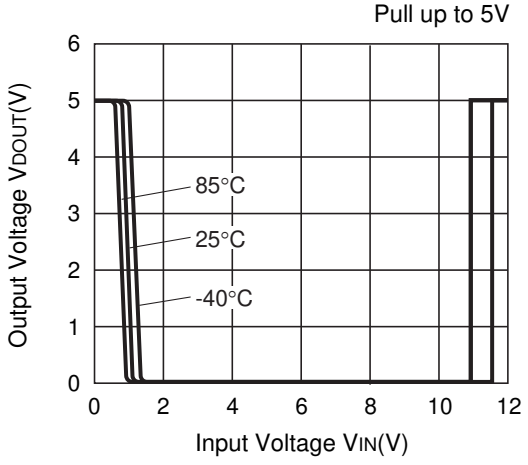

12) Nch Driver Output Current vs. V_{DS}

R1150H (-V_{DET}=4.5V)

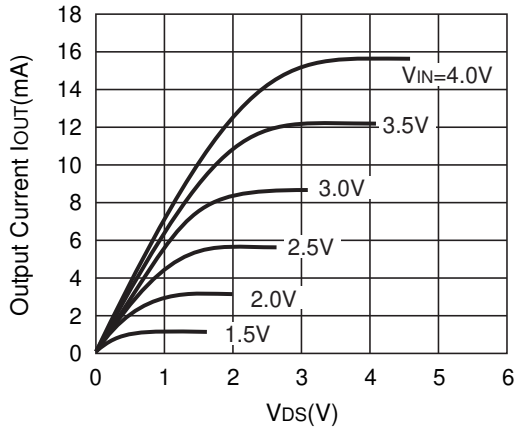

R1150H (-V_{DET}=11.0V)

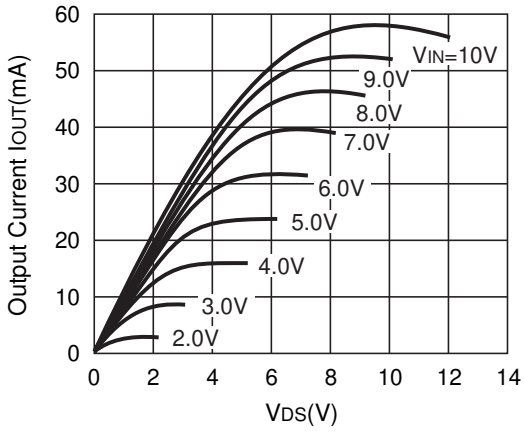

13) Nch Driver Output Current vs. Input Voltage

R1150H (-V_{DET}=4.5V)

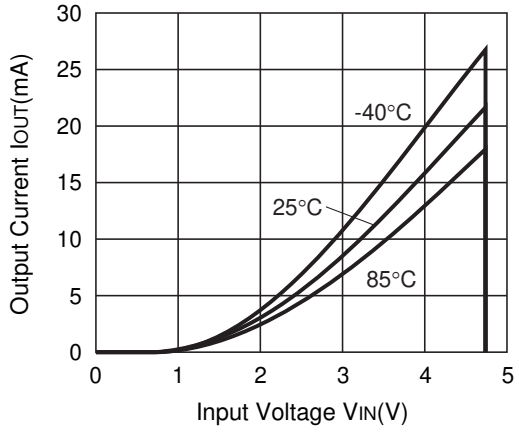

R1150H (-V_{DET}=11.0V)

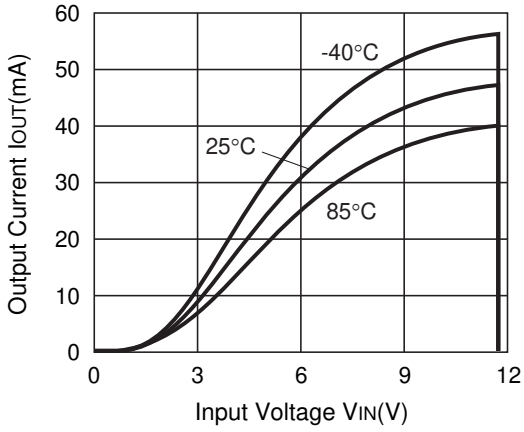

14) Detector Output Delay Time vs. Temperature

R1150H (-V_{DET}=4.5V)

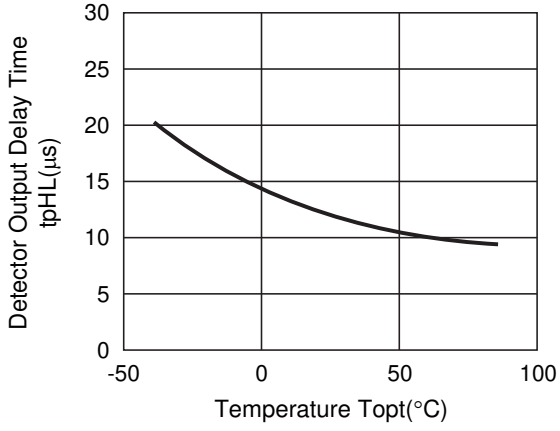

15) Thermal Shutdown Temperature vs. Output Voltage

R1150H (VR=5.0V)

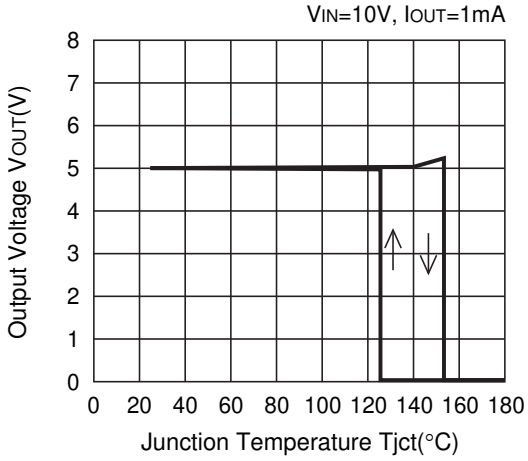

16) Output Delay Time vs. Temperature

R1150H (-V_{DET}=4.5V)

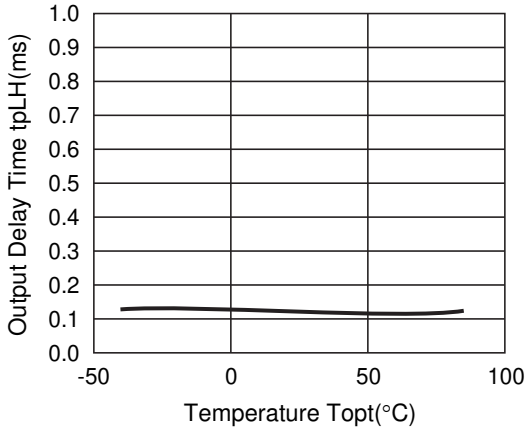

17) C_D pin Threshold Voltage vs. Temperature

R1150H (V_{DET}=4.0V)

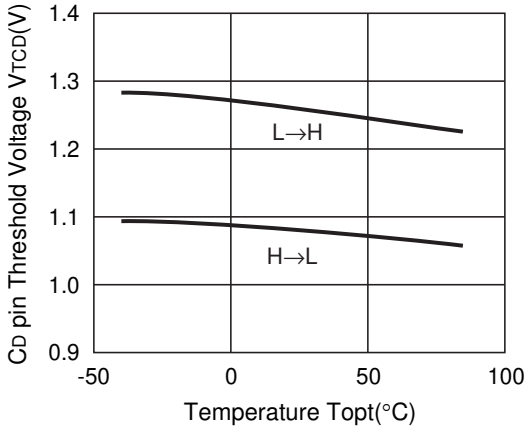

R1150H (V_{DET}=9.0V)

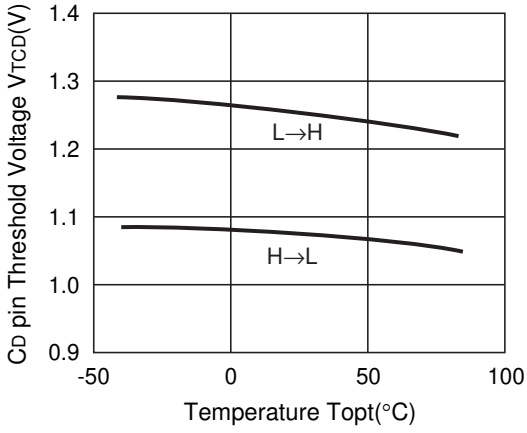

18) C_D pin Sink Current vs. Input Voltage

R1150H (V_{DET}=4.0V)

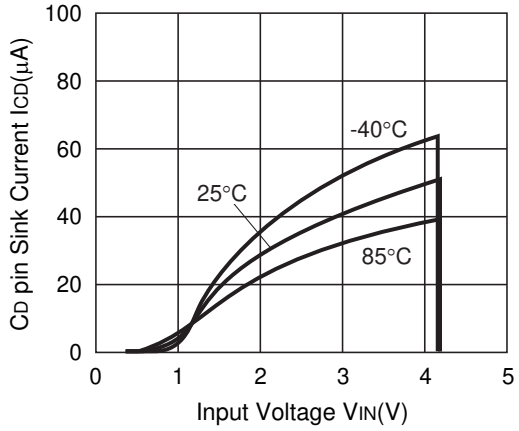

R1150HxxxD (V_{DET}=9.0V)

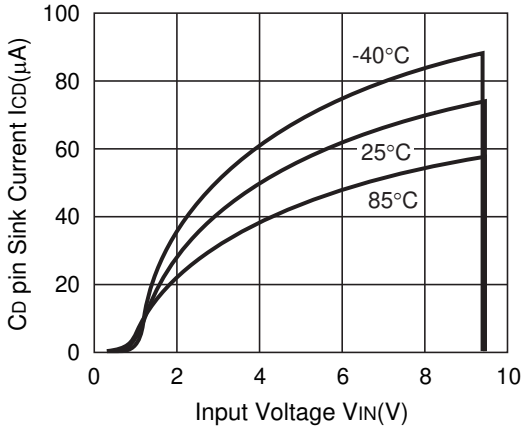

R1150H (V_{DET}=15.0V)

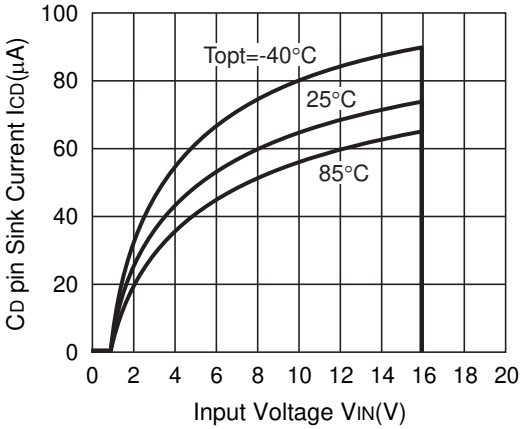

19) C_D pin Sink Current vs. V_{DS}

R1150H (V_{DET}=4.0V)

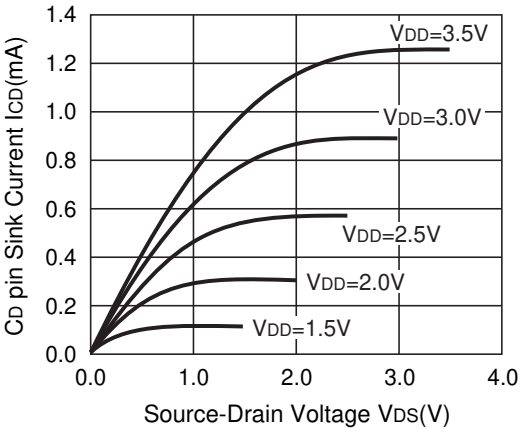

R1150H (V_{DET}=9.0V)

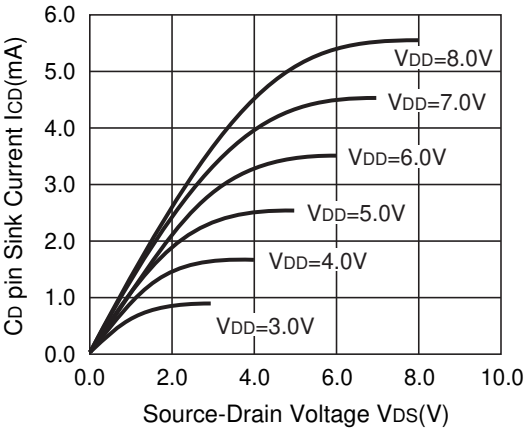

R1150H (V_{DET}=15.0V)

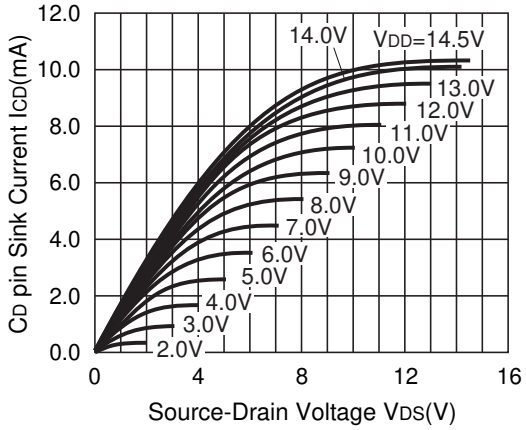

20) Output Delay Time vs. External Capacitance

R1150H (V_{DET}=4.0V)

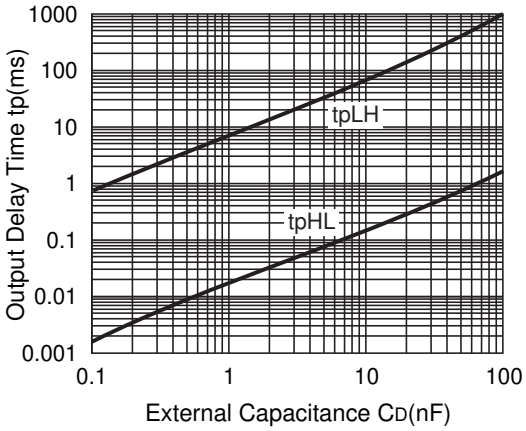

21) t_{PLH}delay vs. Temperature

R1150HxxxD (V_{DET}=4.0V)

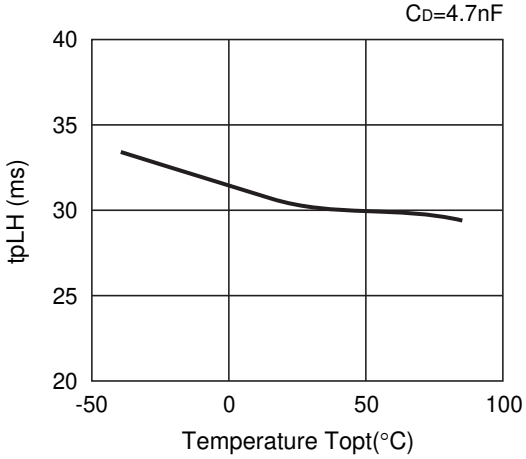

R1150HxxxD (V_{DET}=9.0V)

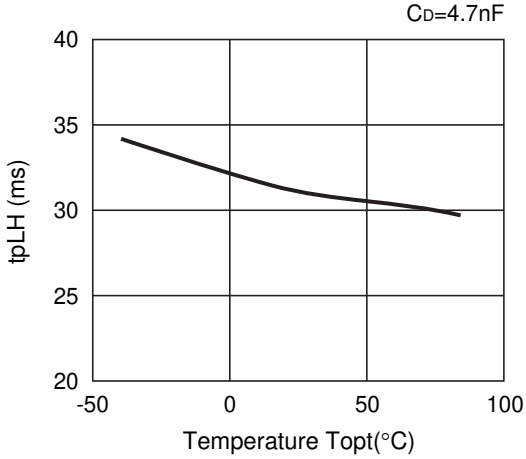

TYPICAL APPLICATIONS

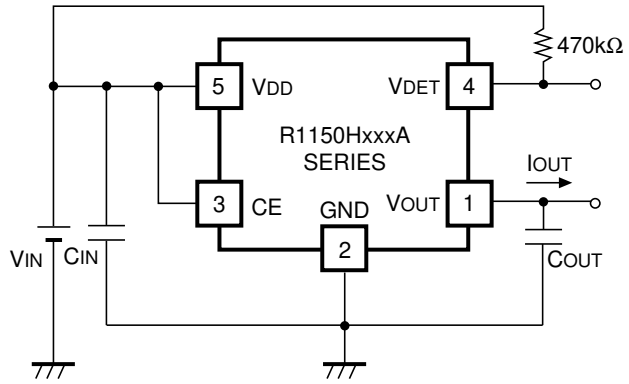

R1150HxxxA

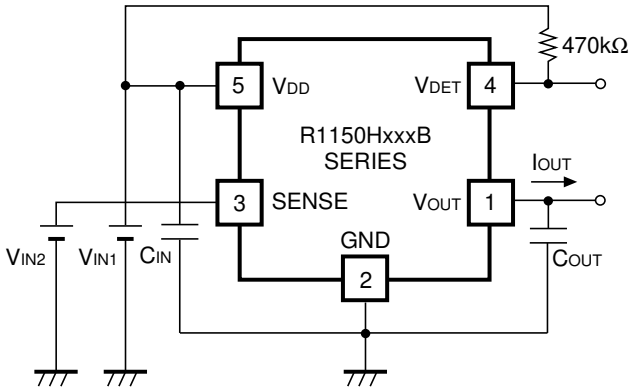

R1150HxxxB

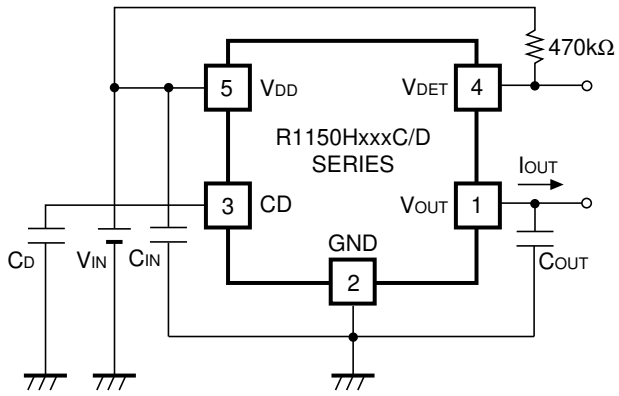

R1150HxxxC

TECHNICAL NOTES

Phase Compensation

Phase Compensation of the R1150H Series has been made internally for stable operation even though the load current would vary. Therefore, without the capacitors, C_{IN} and C_{OUT}, Output Voltage is regulated, but for more stable operation, use 0.1µF or more capacitors as C_{IN} and C_{OUT}. Wiring should be made as short as possible.

PCB layout

Current flows into wiring for V_{DD} or GND, thus, if the impedance of the wiring is rather high, it may cause of making noise or unstable operation, thus width and pattern should be enough wide to avoid such problems. Connect the capacitor, C_{IN} between V_{DD} pin and GND pin as close as possible.

About the output voltage and the detector threshold setting (In case of R1150HxxxD)

When the value difference between release voltage of voltage detector and the output voltage of voltage regulator is little, the release function may not operate after detective, due to change the output voltage of voltage detector. Pay attention for setting of the release voltage.

Refer to the following formula for setting the voltage of output and detective value.
$(V_{OUT} \times 0.975) - (-V_{DET} \times 1.10) > 0.2$

Thermal Shutdown

Thermal shutdown function is included in the R1150HxxxA/B/C/D Series, when the junction temperature is equal or more than +150°C (Typ.), the operation of regulator would stop. After that, when the junction temperature is equal or less than +120°C (Typ.), the operation of regulator would restart. Unless the cause of rising temperature would remove, the regulator repeats on and off, and output waveform would be like consecutive pulses.

Chip Enable Circuit

Do not make voltage level of chip enable pin keep floating level, or in between V_{IH} and V_{IL}. Unless otherwise, Output voltage would be unstable or indefinite, or unexpected current would flow internally.

Output Delay Time for Release V_{DET}

In the R1150Hxx1C/D can set an output delay time for release voltage detector with connecting a capacitor to C_D pin. When an input voltage (in the case of R1150Hxx1C) or an output voltage (in the case of R1150Hxx1D) surpasses the release voltage of its voltage detector ($+V_{DET}$), the capacitor which is connected to C_D pin is started to be charged, as a result, C_D pin voltage rises. When the C_D pin voltage surpasses C_D pin threshold voltage, the output voltage of the voltage detector outputs “H”.

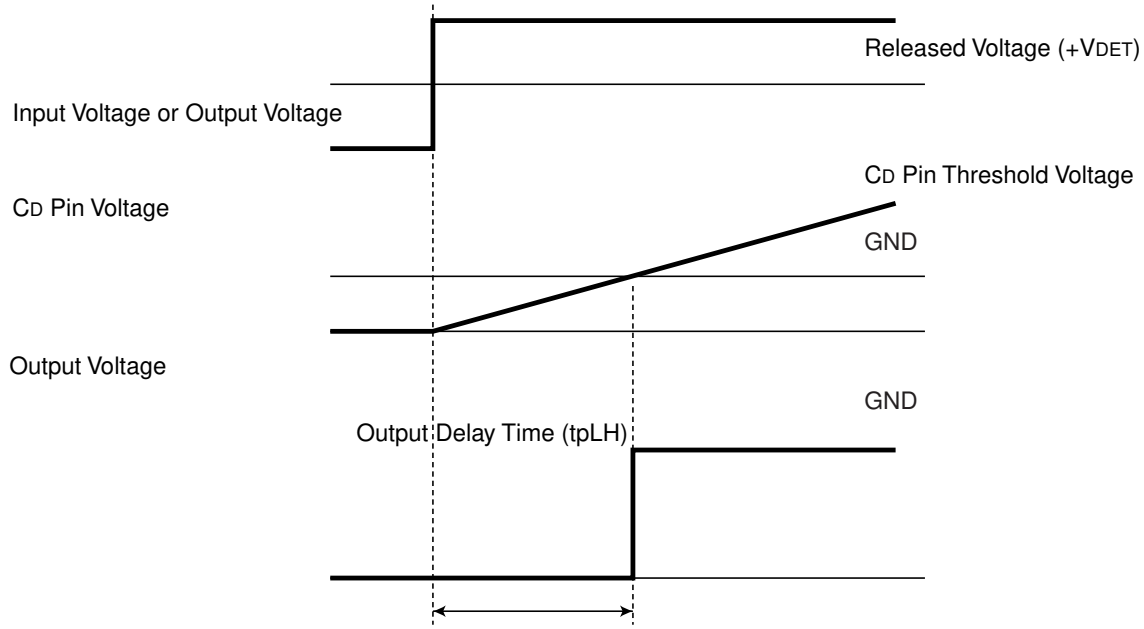

Output delay time for release voltage detector can be calculated with the next formula:
$t_{PLH}=1.25/200\times10^{9}\times C_D$ (sec)

Input Transient Response

If the input transient speed is equal or faster than 80mV/μs and the transient level difference is equal or more than 1.5V, the output response may be extremely worse than normal operation. In that case, add a capacitor between V_{IN} and GND, and make the transient speed of V_{IN} slower than 80mV/μs.

Ver. A

The power dissipation of the package is dependent on PCB material, layout, and environmental conditions. The following measurement conditions are based on JEDEC STD. 51-7.

Measurement Conditions

Item	Measurement Conditions
Environment	Mounting on Board (Wind Velocity = 0 m/s)
Board Material	Glass Cloth Epoxy Plastic (Four-Layer Board)
Board Dimensions	76.2 mm × 114.3 mm × 0.8 mm
Copper Ratio	Outer Layer (First Layer): Less than 95% of 50 mm Square Inner Layers (Second and Third Layers): Approx. 100% of 50 mm Square Outer Layer (Fourth Layer): Approx. 100% of 50 mm Square
Through-holes	ϕ 0.3 mm × 13 pcs

Measurement Result (Ta = 25°C, Tjmax = 125°C)

Item	Measurement Result
Power Dissipation	2600 mW
Thermal Resistance (θja)	θja = 38°C/W
Thermal Characterization Parameter (ψjt)	ψjt = 13°C/W

θja: Junction-to-Ambient Thermal Resistance

ψjt: Junction-to-Top Thermal Characterization Parameter

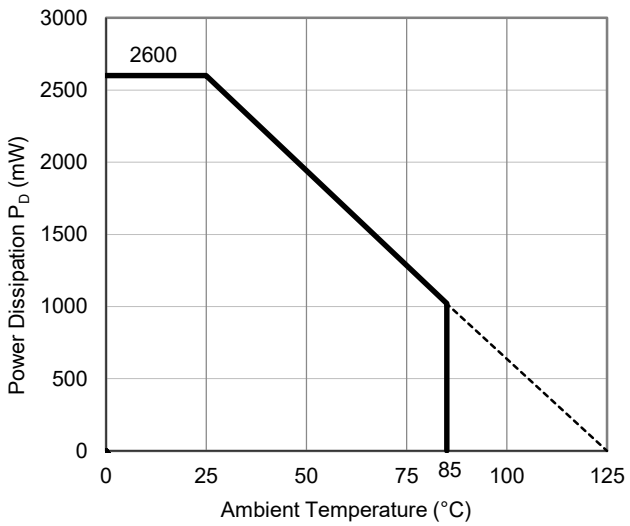

Power Dissipation vs. Ambient Temperature

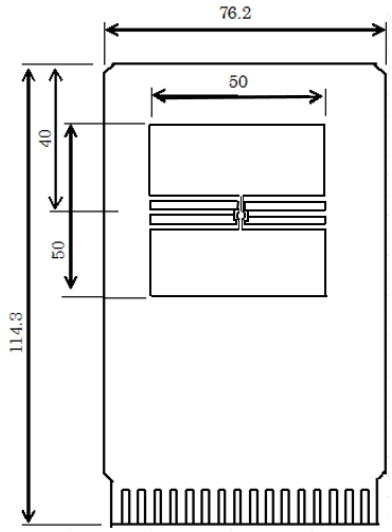

Measurement Board Pattern

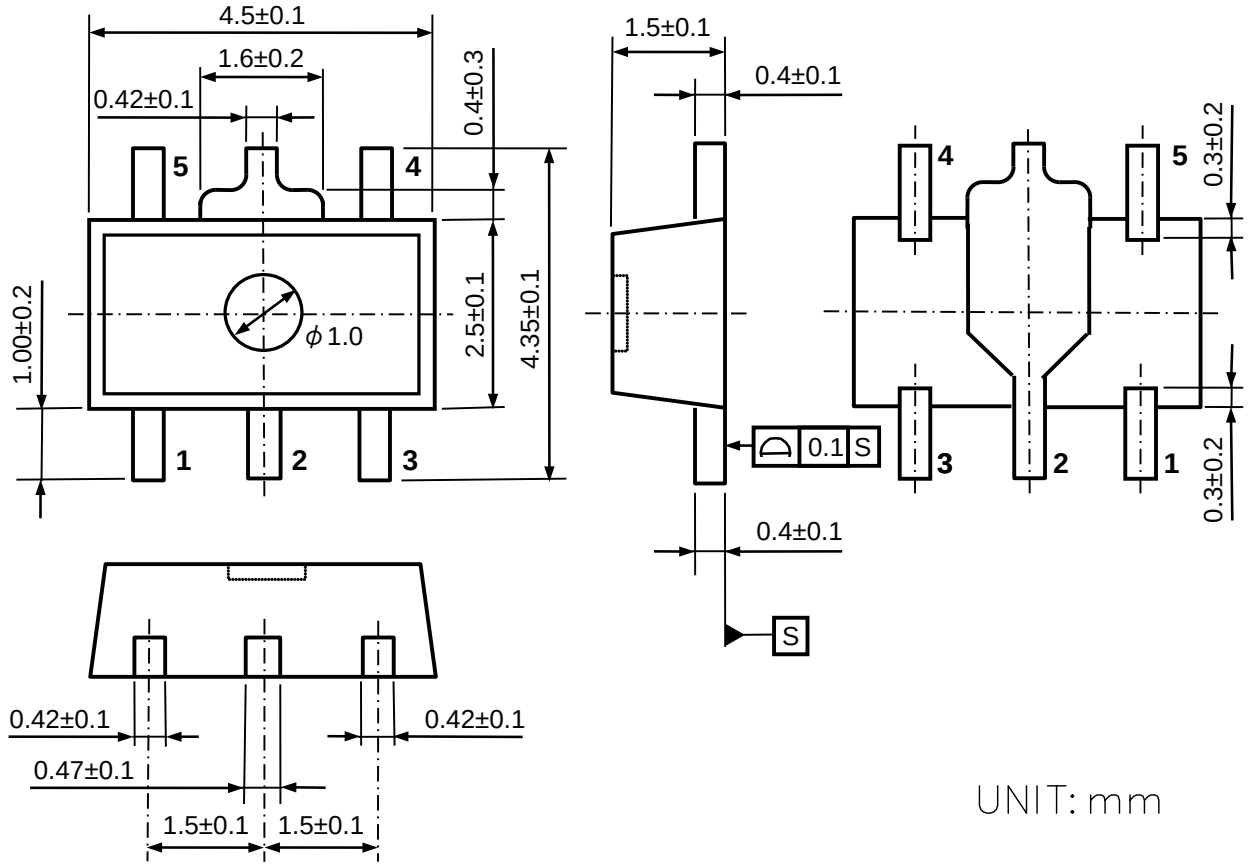

SOT-89-5 Package Dimensions

①②③④: Product Code ⋯ Refer to *Part Marking List*

⑤⑥: Lot Number ⋯ Alphanumeric Serial Number

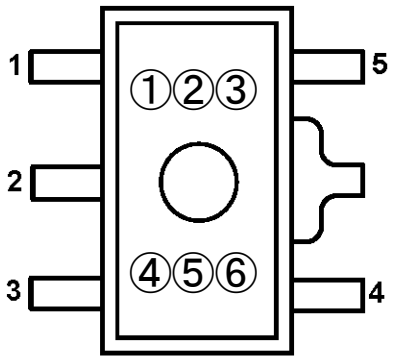

SOT-89-5 Part Markings

NOTICE
There can be variation in the marking when different AOI (Automated Optical Inspection) equipment is used. In the case of recognizing the marking characteristic with AOI, please contact RICOH sales or our distributor before attempting to use AOI.

R1150H Part Marking List: Consumer Grade, Automotive Grade

R1150HxxxA Series

Product Name	①	②	③	④	Vet V_{OUT}	
					VR	VD
R1150H002A	D	0	2	A	3.3V	2.5V
R1150H003A	D	0	3	A	5.0V	4.3V
R1150H006A	D	0	6	A	5.0V	4.5V
R1150H010A	D	1	0	A	3.0V	4.2V
R1150H011A	D	1	1	A	7.0V	2.8V
R1150H012A	D	1	2	A	12.0V	4.7V
R1150H013A	D	1	3	A	7.5V	4.3V
R1150H014A	D	1	4	A	7.5V	4.7V
R1150H015A	D	1	5	A	3.0V	2.5V
R1150H019A	D	1	9	A	14.0V	15.0V
R1150H021A	D	2	1	A	3.6V	4.3V
R1150H023A	D	2	3	A	12.0V	4.2V
R1150H027A	D	2	7	A	3.6V	9.0V
R1150H029A	D	2	9	A	3.6V	7.8V
R1150H033A	D	3	3	A	3.1V	4.5V
R1150H039A	D	3	9	A	3.3V	6.8V
R1150H040A	D	4	0	A	3.3V	5.0V
R1150H042A	D	4	2	A	5.6V	4.5V
R1150H043A	D	4	3	A	9.0V	9.9V
R1150H044A	D	4	4	A	8.0V	8.9V
R1150H045A	D	4	5	A	5.0V	5.6V
R1150H046A	D	4	6	A	5.6V	3.0V
R1150H047A	D	4	7	A	12.0V	5.0V
R1150H048A	D	4	8	A	5.0V	7.5V
R1150H049A	D	4	9	A	2.85V	4.5V
R1150H050A	D	5	0	A	5.4V	3.0V
R1150H051A	D	5	1	A	3.3V	10.0V
R1150H052A	D	5	2	A	3.3V	7.5V

R1150HxxxB Series

Product Name	①	②	③	④	Vet V_{OUT}	
					VR	VD
R1150H002B	D	0	2	B	3.3V	2.5V
R1150H003B	D	0	3	B	5.0V	4.3V
R1150H004B	D	0	4	B	2.5V	2.3V
R1150H005B	D	0	5	B	3.3V	2.9V
R1150H006B	D	0	6	B	5.0V	4.5V
R1150H021B	D	2	1	B	3.6V	4.3V
R1150H024B	D	2	4	B	3.3V	3.6V
R1150H025B	D	2	5	B	4.0V	5.0V
R1150H035B	D	3	5	B	3.3V	3.8V
R1150H036B	D	3	6	B	3.3V	5.6V
R1150H037B	D	3	7	B	2.5V	4.1V
R1150H038B	D	3	8	B	5.0V	2.3V

R1150HxxxC Series

Product Name	①	②	③	④	Vet V_{OUT}	
					VR	VD
R1150H007C	D	0	7	C	3.5V	3.1V
R1150H008C	D	0	8	C	3.3V	4.2V
R1150H009C	D	0	9	C	5.0V	4.1V
R1150H020C	D	2	0	C	5.0V	4.2V
R1150H034C	D	3	4	C	5.0V	13.0V
R1150H041C	D	4	1	C	7.0V	7.5V

R1150HxxxD Series

Product Name	①	②	③	④	Vet V_{OUT}	
					VR	VD
R1150H002D	D	0	2	D	3.3V	2.5V
R1150H016D	D	1	6	D	5.0V	3.5V
R1150H018D	D	1	8	D	5.0V	3.0V
R1150H020D	D	2	0	D	5.0V	4.2V
R1150H022D	D	2	2	D	3.3V	2.8V
R1150H026D	D	2	6	D	3.3V	2.3V
R1150H028D	D	2	8	D	5.0V	2.1V
R1150H030D	D	3	0	D	3.3V	2.2V
R1150H031D	D	3	1	D	3.3V	2.0V
R1150H032D	D	3	2	D	3.4V	2.0V

1. The products and the product specifications described in this document are subject to change or discontinuation of production without notice for reasons such as improvement. Therefore, before deciding to use the products, please refer to our sales representatives for the latest information thereon.
2. The materials in this document may not be copied or otherwise reproduced in whole or in part without the prior written consent of us.
3. This product and any technical information relating thereto are subject to complementary export controls (so-called KNOW controls) under the Foreign Exchange and Foreign Trade Law, and related politics ministerial ordinance of the law. (Note that the complementary export controls are inapplicable to any application-specific products, except rockets and pilotless aircraft, that are insusceptible to design or program changes.) Accordingly, when exporting or carrying abroad this product, follow the Foreign Exchange and Foreign Trade Control Law and its related regulations with respect to the complementary export controls.
4. The technical information described in this document shows typical characteristics and example application circuits for the products. The release of such information is not to be construed as a warranty of or a grant of license under our or any third party's intellectual property rights or any other rights.
5. The products listed in this document are intended and designed for automotive applications. Those customers intending to use a product in an application requiring extreme quality and reliability, for example, in a highly specific application where the failure or misoperation of the product could result in human injury or death should first contact us.
    - Aerospace Equipment
    - Equipment Used in the Deep Sea
    - Power Generator Control Equipment (nuclear, steam, hydraulic, etc.)
    - Life Maintenance Medical Equipment
    - Fire Alarms / Intruder Detectors
    - Vehicle Control Equipment (airplane, railroad, ship, etc.)
    - Various Safety Devices
    - Traffic control system
    - Combustion equipment

    In case your company desires to use this product for any applications other than general electronic equipment mentioned above, make sure to contact our company in advance. Note that the important requirements mentioned in this section are not applicable to cases where operation requirements such as application conditions are confirmed by our company in writing after consultation with your company.
6. We are making our continuous effort to improve the quality and reliability of our products, but semiconductor products are likely to fail with certain probability. In order to prevent any injury to persons or damages to property resulting from such failure, customers should be careful enough to incorporate safety measures in their design, such as redundancy feature, fire containment feature and fail-safe feature. We do not assume any liability or responsibility for any loss or damage arising from misuse or inappropriate use of the products.
7. The products have been designed and tested to function within controlled environmental conditions. Do not use products under conditions that deviate from methods or applications specified in this datasheet. Failure to employ the products in the proper applications can lead to deterioration, destruction or failure of the products. We shall not be responsible for any bodily injury, fires or accident, property damage or any consequential damages resulting from misuse or misapplication of the products.
8. Quality Warranty

    8-1. Quality Warranty Period

    In the case of a product purchased through an authorized distributor or directly from us, the warranty period for this product shall be one (1) year after delivery to your company. For defective products that occurred during this period, we will take the quality warranty measures described in section 8-2. However, if there is an agreement on the warranty period in the basic transaction agreement, quality assurance agreement, delivery specifications, etc., it shall be followed.

    8-2. Quality Warranty Remedies

    When it has been proved defective due to manufacturing factors as a result of defect analysis by us, we will either deliver a substitute for the defective product or refund the purchase price of the defective product.
    Note that such delivery or refund is sole and exclusive remedies to your company for the defective product.

    8-3. Remedies after Quality Warranty Period

    With respect to any defect of this product found after the quality warranty period, the defect will be analyzed by us. On the basis of the defect analysis results, the scope and amounts of damage shall be determined by mutual agreement of both parties. Then we will deal with upper limit in Section 8-2. This provision is not intended to limit any legal rights of your company.
9. Anti-radiation design is not implemented in the products described in this document.
10. The X-ray exposure can influence functions and characteristics of the products. Confirm the product functions and characteristics in the evaluation stage.
11. WLCSP products should be used in light shielded environments. The light exposure can influence functions and characteristics of the products under operation or storage.
12. Warning for handling Gallium and Arsenic (GaAs) products (Applying to GaAs MMIC, Photo Reflector). These products use Gallium (Ga) and Arsenic (As) which are specified as poisonous chemicals by law. For the prevention of a hazard, do not burn, destroy, or process chemically to make them as gas or power. When the product is disposed of, please follow the related regulation and do not mix this with general industrial waste or household waste.
13. Please contact our sales representatives should you have any questions or comments concerning the products or the technical information.

NISSHINBO

Nisshinbo Micro Devices Inc.

Official website
https://www.nisshinbo-microdevices.co.jp/en/

Purchase information
https://www.nisshinbo-microdevices.co.jp/en/buy/

ENTEGRECİ

Bu belge www.entegreci.com üzerinden sunulmaktadır.

Elektronik komponent tedarikinde Entegreci

Entegreci, Eskişehir merkezli, Türkiye geneline satış yapan bir elektronik komponent mağazasıdır. Entegreler (IC), mikrodenetleyiciler, transistörler, diyotlar, pasif elemanlar, konnektörler, modüller ve geliştirme kartları tek adetten seri üretim adetlerine kadar satılır. Ürün sayfalarında güncel stok durumunu, fiyatı ve datasheet bağlantısını bulabilirsiniz.

Parça koduyla arama

Üretici parça numarasını yazın; stok ve fiyatı hemen görün.

www.entegreci.com

Ürün kategorileri

Entegreden kapasitöre tüm elektronik komponent kategorileri.

Kategorilere göz atın

Üreticiler

Aradığınız üreticinin ürünlerini tek sayfada inceleyin.

Üreticileri görün

Toplu alım ve teklif

Listede olmayan ya da yüksek adetli parçalar için teklif isteyin.

Teklif isteyin

www.entegreci.com | **destek@entegreci.com** | **0850 305 90 34**

Entegreci is an online electronic components store based in Türkiye. Search by manufacturer part number to see stock, prices and datasheets for integrated circuits, microcontrollers, transistors, passive components and connectors, or request a quote for parts that are not listed.

Bu sayfa Entegreci tarafından eklenmiştir. Belgenin önceki sayfaları asıl yayıncısına aittir ve içeriği değiştirilmemiştir; en güncel sürüm için belgenin yayıncısına başvurun.