NISSHINBO

R1161x SERIES

3-MODE 300mA LDO REGULATOR

NO.EA-106-140530

OUTLINE

The R1161x Series are CMOS-based voltage regulator ICs with high output voltage accuracy, low supply current, and low ON-resistance. Each of these voltage regulator ICs consists of a voltage reference unit, an error amplifier, resistors for setting output voltage, a current limit circuit, and a chip enable circuit.

These ICs perform with low dropout voltage and a chip enable function. To prevent the destruction by over current, current limit circuit is included. The R1161x Series have 3-mode. One is standby mode with CE or standby control pin. Standby mode realizes ultra small consumption current off mode. Other two modes are realized with ECO pin. Fast Transient Mode (FT mode) and Low Power Mode (LP mode) are alternative with ECO pin. Consumption current is reduced at Low Power Mode compared with Fast Transient Mode. Output voltage is maintained between FT mode and LP mode.

The output voltage of these ICs is internally fixed with high accuracy. Since the packages for these ICs are SOT-23-5, SON-6, and HSON-6, high density mounting of the ICs on boards is possible.

FEATURES

- Supply Current ..... Typ. 3.5μA (Low Power Mode, V_{OUT}<1.6V),
  Typ. 80μA (Fast Transient Mode, V_{OUT}<1.8V)
  Typ. 60μA (Fast Transient Mode, $V_{OUT} \geq$ 1.8V)
- Standby Mode ..... Typ. 0.1μA
- Dropout Voltage ..... Typ. 0.48V (I_{OUT}=300mA Output Voltage=1.0V Type)
  Typ. 0.31V (I_{OUT}=300mA Output Voltage=1.5V Type)
  Typ. 0.23V (I_{OUT}=300mA Output Voltage=3.0V Type)
- Ripple Rejection ..... Typ. 65dB (f=1kHz, FT Mode)
- Temperature-Drift Coefficient of Output Voltage Typ. ±100ppm/°C
- Line Regulation ..... Typ. 0.01%/V (at Fast Transient Mode)
- Output Voltage Accuracy ..... ±2.0%(±3.0% at LP Mode)
- Packages SOT-23-5, SON-6,
  HSON-6
- Output Voltage ..... 0.8V to 3.3V (0.1V steps)
  (For other voltages, please refer to MARK INFORMATIONS.)
- Input Voltage ..... Min. 1.40V ($V_{OUT} \geq$ 1.0V)
  Min. 1.45V (V_{OUT}<1.0V)
- Built-in fold-back protection circuit ..... Typ. 50mA (Current at short mode)
- External Capacitors ..... C_{IN} = C_{OUT} = Tantalum 1.0μF (V_{OUT}<1.0V)
  C_{IN} = C_{OUT} =Ceramic 1.0μF ($V_{OUT} \geq$ 1.0V)

APPLICATIONS

- Precision Voltage References.
- Power source for electrical appliances such as cameras, VCRs and hand-held communication equipment.
- Power source for battery-powered equipment.

BLOCK DIAGRAM

R1161xxxxA

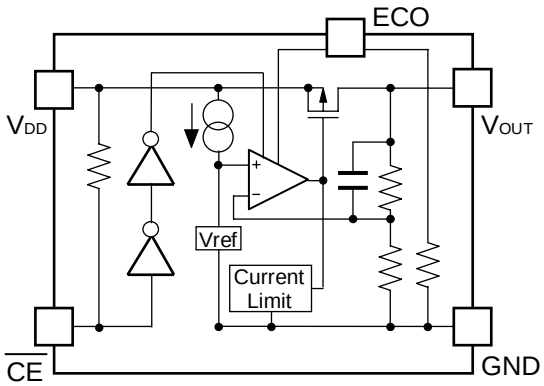

R1161xxxxB

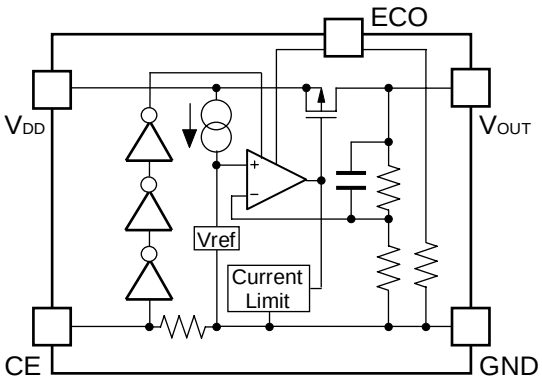

R1161xxxxD

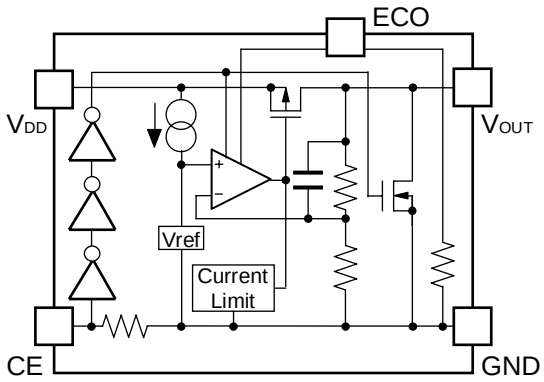

SELECTION GUIDE

The output voltage, chip enable polarity, auto discharge function, and package, etc. for the ICs can be selected at the user's request.

Product Name	Package	Quantity per Reel	Pb Free	Halogen Free
R1161Nxx1∗-TR-FE	SOT-23-5	3,000 pcs	Yes	Yes
R1161Dxx1∗-TR-FE	SON-6	3,000 pcs	Yes	Yes
R1161Dxx2∗-TR-FE	HSON-6	3,000 pcs	Yes	Yes

xx: The output voltage can be designated in the range from 0.8V(08) to 3.3V(33) in 0.1V steps.
(For other voltages, please refer to MARK INFORMATIONS.)

∗ : CE pin polarity and auto discharge function at off state are options as follows.
(A) "L" active type, without auto discharge function at off state
(B) "H" active type, without auto discharge function at off state
(D) "H" active type, with auto discharge function at off state

PIN CONFIGURATIONS

SOT-23-5

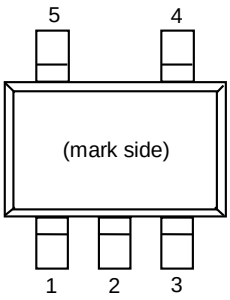

SON-6

Top View

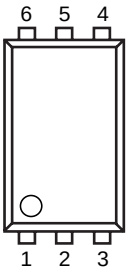

Bottom View

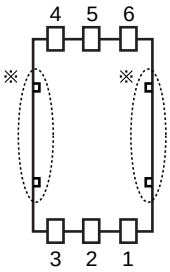

HSON-6

Top View

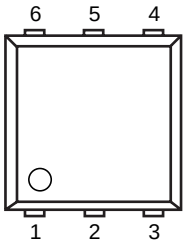

Bottom View

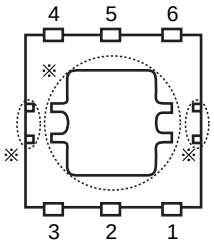

PIN DESCRIPTIONS

- **SOT-23-5**

Pin No.	Symbol	Description
1	V_{DD}	Input Pin
2	GND	Ground Pin
3	$\overline{CE}$ or CE	Chip Enable Pin
4	ECO	MODE alternative pin
5	V_{OUT}	Output pin

- **SON-6, HSON-6**

Pin No.	Symbol	Description
1	V_{DD}	Input Pin
2	NC	No Connection
3	V_{OUT}	Output pin
4	ECO	MODE alternative pin
5	GND	Ground Pin
6	$\overline{CE}$ or CE	Chip Enable Pin

∗) Tab and tab suspension leads are GND level. (They are connected to the reverse side of the IC.)
The tab is better to be connected to the GND, but leaving it open is also acceptable.
The tab suspension leads should be open and do not connect to other wires or land patterns.

ABSOLUTE MAXIMUM RATINGS

Symbol	Item	Rating	Unit
V_{IN}	Input Voltage	6.5	V
V_{ECO}	Input Voltage (ECO Pin)	-0.3 ~ 6.5	V
V_{CE}	Input Voltage ($\overline{CE}$ /CE Pin)	-0.3 ~ 6.5	V
V_{OUT}	Output Voltage	-0.3 ~ V_{IN}+0.3	V
I_{OUT}	Output Current	350	mA
P_D	Power Dissipation (SOT23-5)*	420	mW
P_D	Power Dissipation (SON-6) *	500	
P_D	Power Dissipation (HSON-6) *	900	
Topt	Operating Temperature Range	-40 ~ 85	°C
Tstg	Storage Temperature Range	-55 ~ 125	°C

*) For Power Dissipation, please refer to PACKAGE INFORMATION.

ABSOLUTE MAXIMUM RATINGS

Electronic and mechanical stress momentarily exceeded absolute maximum ratings may cause the permanent damages and may degrade the life time and safety for both device and system using the device in the field.
The functional operation at or over these absolute maximum ratings is not assured.

RECOMMENDED OPERATING CONDITIONS (ELECTRICAL CHARACTERISTICS)

All of electronic equipment should be designed that the mounted semiconductor devices operate within the recommended operating conditions. The semiconductor devices cannot operate normally over the recommended operating conditions, even if when they are used over such conditions by momentary electronic noise or surge. And the semiconductor devices may receive serious damage when they continue to operate over the recommended operating conditions.

ELECTRICAL CHARACTERISTICS

- **R1161xxxxA**

Topt=25°C

Symbol	Item	Conditions	Min.	Typ.	Max.	Unit
V_{OUT}	Output Voltage (FT Mode)	V_{IN}=Set V_{OUT}+1V, V_{ECO}=V_{IN} 1μA ≤ I_{OUT} ≤ 30mA Note 1	×0.98 (-30mV)		×1.02 (30mV)	V
	Output Voltage (LP Mode)	V_{IN}=Set V_{OUT}+1V, V_{ECO}=GND 1μA ≤ I_{OUT} ≤ 30mA Note 2	×0.97 (-45mV)		×1.03 (45mV)	V
I_{OUT}	Output Current	V_{IN}–V_{OUT}=1.0V	300			mA
ΔV_{OUT}/ ΔI_{OUT}	Load Regulation (FT Mode)	V_{IN}=Set V_{OUT}+1V, V_{ECO}=V_{IN} 1mA ≤ I_{OUT} ≤ 300mA		40	70	mV
ΔV_{OUT}/ ΔI_{OUT}	Load Regulation (LP Mode)	V_{IN}=Set V_{OUT}+1V, V_{ECO}=GND 1mA ≤ I_{OUT} ≤ 100mA		15	30	mV
V_{DIF}	Dropout Voltage	Refer to the ELECTRICAL CHARACTERISTICS by OUTPUT VOLTAGE				
I_{SS1}	Supply Current (FT Mode)	V_{IN}=Set V_{OUT}+1V V_{ECO}=V_{IN}, V_{OUT}<1.8V		80	111	μA
		V_{IN}=Set V_{OUT}+1V V_{ECO}=V_{IN}, V_{OUT} ≥ 1.8V		60	90	μA
I_{SS2}	Supply Current (LP Mode)	V_{IN}=Set V_{OUT}+1V, V_{OUT}<1.6V, V_{ECO}=GND		3.5	8.0	μA
		V_{IN}=Set V_{OUT}+1V V_{OUT} ≥ 1.6V, V_{ECO}=GND		4.5	9.0	μA
Istandby	Supply Current (Standby)	V_{IN}=V_{CE}=Set V_{OUT}+1V, V_{ECO}=GND or V_{IN}		0.1	1.0	μA
ΔV_{OUT}/ ΔV_{IN}	Line Regulation (FT Mode)	Set V_{OUT}+0.5V ≤ V_{IN} ≤ 6.0V I_{OUT}=30mA, V_{ECO}=V_{IN} Set V_{OUT} ≤ 0.9V: 1.4V ≤ V_{IN} ≤ 6.0V		0.01	0.15	%/V
ΔV_{OUT}/ ΔV_{IN}	Line Regulation (LP Mode)	Set V_{OUT} + 0.5V ≤ V_{IN} ≤ 6.0V I_{OUT}=30mA, V_{ECO}=GND Set V_{OUT} ≤ 0.9V:1.4V ≤ V_{IN} ≤ 6.0V		0.05	0.20	%/V
RR	Ripple Rejection (FT Mode)	f = 1kHz, Ripple 0.2Vp-p V_{IN}=Set V_{OUT} + 1V I_{OUT}=30mA, V_{ECO}=V_{IN}		65		dB
V_{IN}	Input Voltage		1.4		6.0	V
ΔV_{OUT}/ ΔTopt	Output Voltage Temperature Coefficient	I_{OUT}=30mA –40°C ≤ Topt ≤ 85°C		±100		ppm /°C
Ilim	Short Current Limit	V_{OUT}=0V		50		mA
R_{PU}	$\overline{CE}$ Pull-up Resistance		1.87	5.00	12.00	MΩ
R_{PD}	ECO Pull-down Resistance		1.87	5.00	12.00	MΩ
V_{CEH}	$\overline{CE}$, ECO Input Voltage “H”		1.0		6.0	V
V_{CEL}	$\overline{CE}$, ECO Input Voltage “L”		0.0		0.3	V
V_{EN}	Output Noise	BW=10Hz to 100kHz		30		μVrms

Note1: ±30mV tolerance for V_{OUT} ≤ 1.5V.
Note2: ±45mV tolerance for V_{OUT} ≤ 1.5V.

- **R1161xxxxB/D**

Topt=25°C

Symbol	Item	Conditions	Min.	Typ.	Max.	Unit
V_{OUT}	Output Voltage (FT Mode)	V_{IN}=Set V_{OUT}+1V,V_{ECO}=V_{IN} 1μA ≤ I_{OUT} ≤ 30mA Note 1	×0.98 (–30mV)		×1.02 (30mV)	V
	Output Voltage (LP Mode)	V_{IN}=Set V_{OUT}+1V,V_{ECO}=GND 1μA ≤ I_{OUT} ≤ 30mA Note 2	×0.97 (–45mV)		×1.03 (45mV)	V
I_{OUT}	Output Current	V_{IN}-V_{OUT}=1.0V	300			mA
ΔV_{OUT}/ ΔI_{OUT}	Load Regulation (FT Mode)	V_{IN}=Set V_{OUT}+1V,V_{ECO}=V_{IN} 1mA ≤ I_{OUT} ≤ 300mA		40	70	mV
ΔV_{OUT}/ ΔI_{OUT}	Load Regulation (LP Mode)	V_{IN}=Set V_{OUT}+1V,V_{ECO}=GND 1mA ≤ I_{OUT} ≤ 100mA		15	30	mV
V_{DIF}	Dropout Voltage	Refer to the ELECTRICAL CHARACTERISTICS by OUTPUT VOLTAGE				
I_{SS1}	Supply Current (FT Mode)	V_{IN}=Set V_{OUT}+1V V_{ECO}=V_{IN},V_{OUT}<1.8V		80	111	μA
		V_{IN}=Set V_{OUT}+1V V_{ECO}=V_{IN}, V_{OUT} ≥ 1.8V		60	90	μA
I_{SS2}	Supply Current (LP Mode)	V_{IN}=Set V_{OUT}+1V, V_{OUT}<1.6V, V_{ECO}=GND		3.5	8.0	μA
		V_{IN}=Set V_{OUT}+1V, V_{OUT} ≥ 1.6V,V_{ECO}=GND		4.5	9.0	μA
Istandby	Supply Current (Standby)	V_{IN}=Set V_{OUT}+1V, V_{CE}=GND,V_{ECO}=GND or V_{IN}		0.1	1.0	μA
ΔV_{OUT}/ ΔV_{IN}	Line Regulation (FT Mode)	Set V_{OUT}+0.5V ≤ V_{IN} ≤ 6.0V I_{OUT}=30mA, V_{ECO}=V_{IN} Set V_{OUT} ≤ 0.9V: 1.4V ≤ V_{IN} ≤ 6.0V		0.01	0.15	%/V
ΔV_{OUT}/ ΔV_{IN}	Line Regulation (LP Mode)	Set V_{OUT}+0.5V ≤ V_{IN} ≤ 6.0V I_{OUT}=30mA, V_{ECO}=GND Set V_{OUT} ≤ 0.9V: 1.4V ≤ V_{IN} ≤ 6.0V		0.05	0.20	%/V
RR	Ripple Rejection (FT Mode)	f=1kHz, Ripple 0.2Vp-p V_{IN}=Set V_{OUT}+1V I_{OUT}=30mA, V_{ECO}=V_{IN}		65		dB
V_{IN}	Input Voltage		1.4		6.0	V
ΔV_{OUT}/ ΔTopt	Output Voltage Temperature Coefficient	I_{OUT}=30mA -40°C ≤ Topt ≤ 85°C		±100		ppm /°C
Ilim	Short Current Limit	V_{OUT}=0V		50		mA
R_{PDC}	CE Pull-down Resistance		1.87	5.00	12.00	MΩ
R_{PDE}	ECO Pull-down Resistance		1.87	5.00	12.00	MΩ
V_{CEH}	CE, ECO Input Voltage “H”		1.0		6.0	V
V_{CEL}	CE, ECO Input Voltage “L”		0.0		0.3	V
V_{EN}	Output Noise	BW=10Hz to 100kHz		30		μVrms
R_{LOW}	Nch On Resistance for auto discharge (applied to D version only)	V_{CE}=0V		60		Ω

Note1: ±30mV tolerance for V_{OUT} ≤ 1.5V.
Note2: ±45mV tolerance for V_{OUT} ≤ 1.5V.

ELECTRICAL CHARACTERISTICS by OUTPUT VOLTAGE

Topt=25°C

Output Voltage V_{OUT} (V)	Dropout Voltage V_{DIF} (V)				
	Condition	V_{DIF} (ECO=H)		V_{DIF} (ECO=L)	
		Typ.	Max.	Typ.	Max.
0.8=V_{OUT}	I_{OUT}=300mA	0.620	0.850	0.670	0.900
0.9=V_{OUT}		0.550	0.780	0.590	0.800
1.0 ≤ V_{OUT} <1.5		0.480	0.700	0.510	0.750
1.5 ≤ V_{OUT} < 2.6		0.310	0.450	0.320	0.480
2.6 ≤ V_{OUT} ≤ 3.3		0.230	0.350	0.240	0.375

TEST CIRCUITS

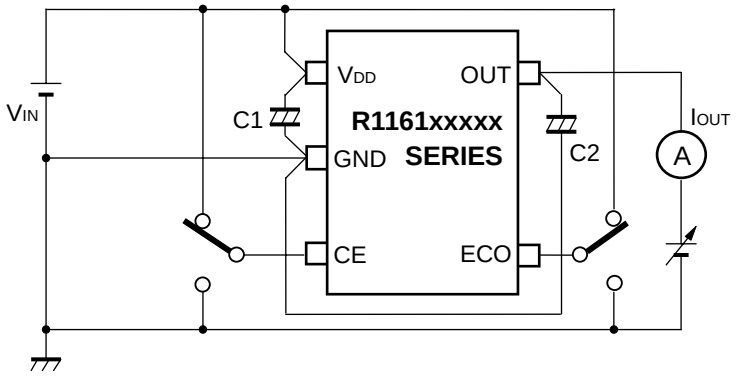

Fig.1 Output Voltage vs. Output Current Test Circuit

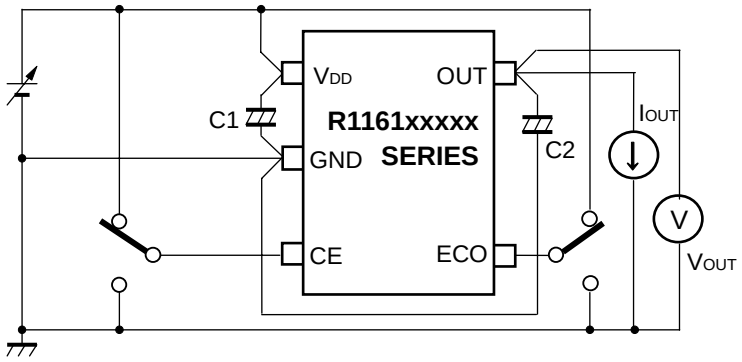

Fig.2 Output Voltage vs. Input Voltage Test Circuit

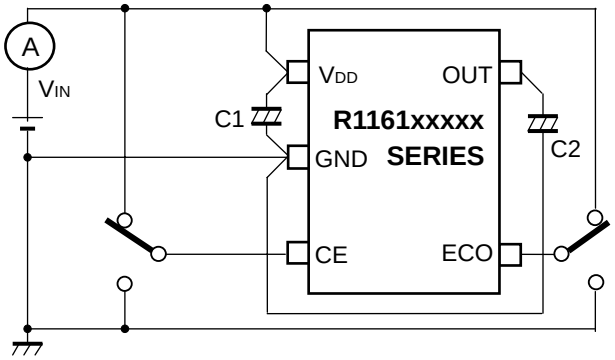

Fig.3 Supply Current vs. Input Voltage Test Circuit

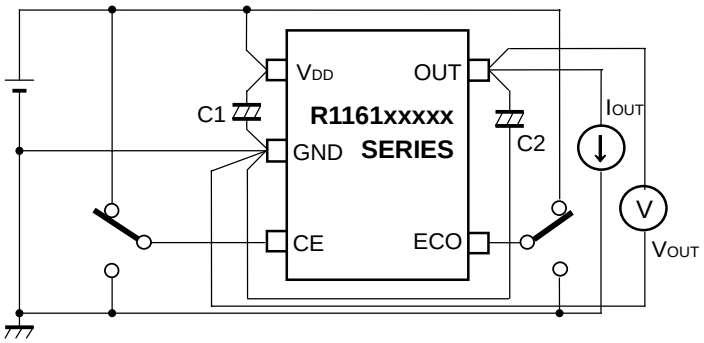

Fig.4 Output Voltage vs. Temperature Test Circuit

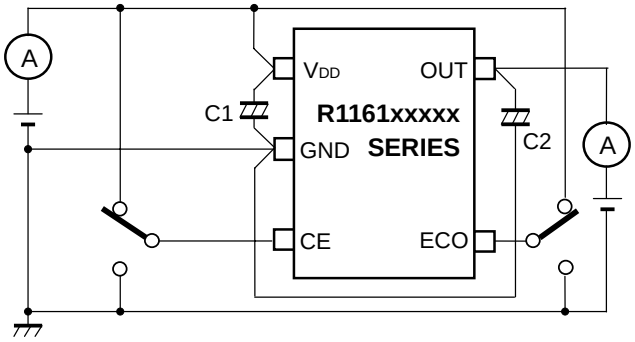

Fig.5 Supply Current vs. Temperature Test Circuit

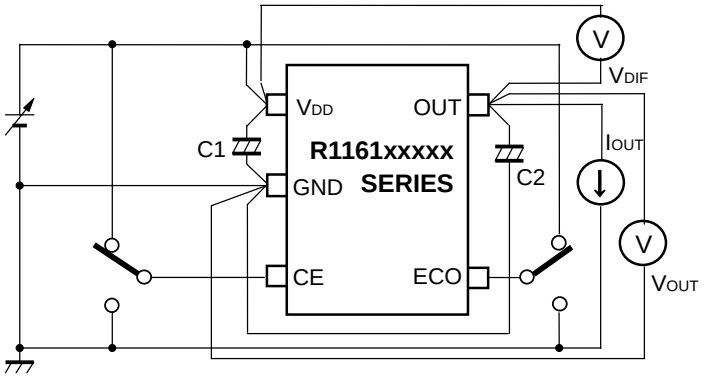

Fig. 6 Dropout Voltage vs. Output Current/ Set Output Voltage Test Circuit

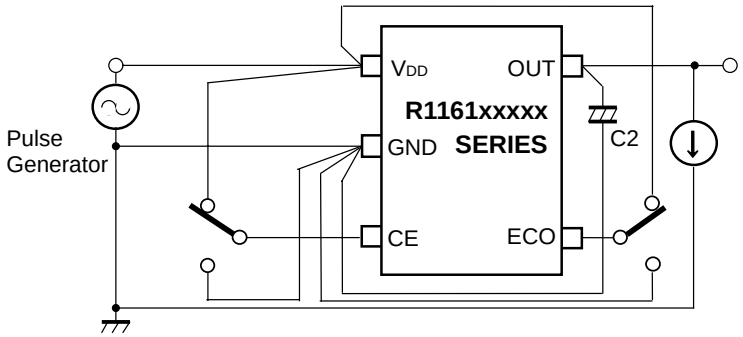

Fig. 7 Ripple Rejection Test Circuit

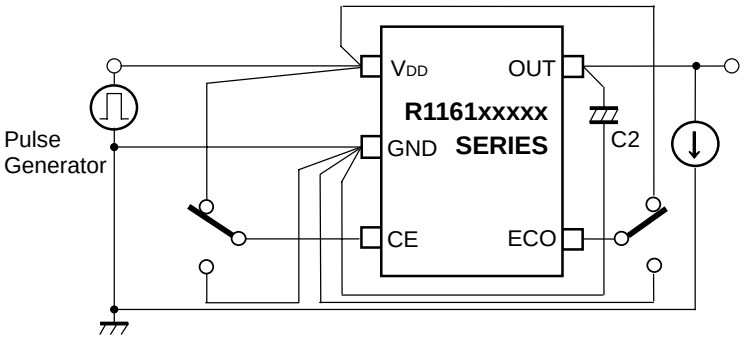

Fig.8 Input Transient Response Test Circuit

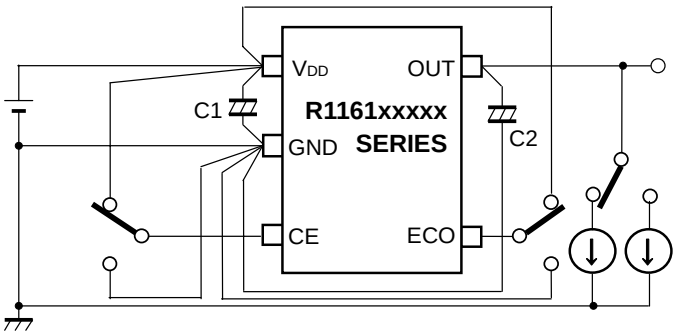

Fig.9 Load Transient Response Test Circuit

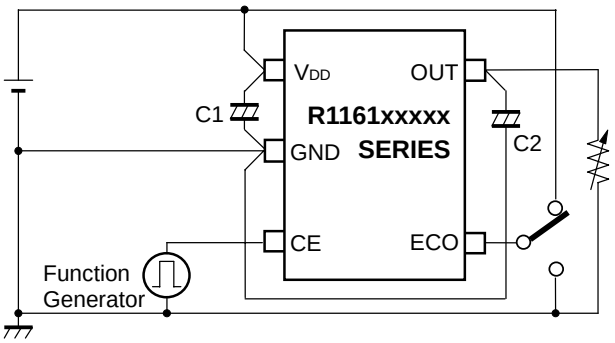

Fig.10 Turn on Speed with CE pin Test Circuit

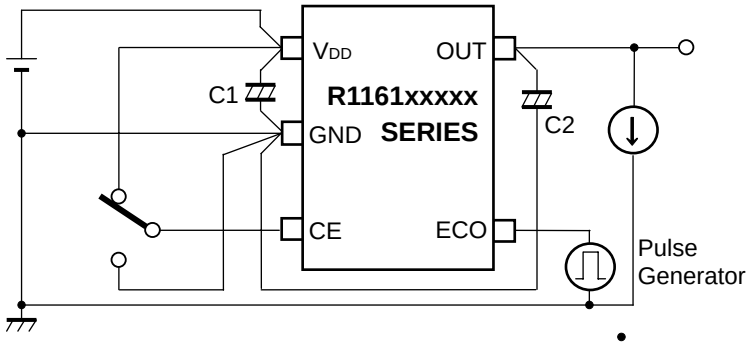

Fig.11 MODE Transient Response Test Circuit

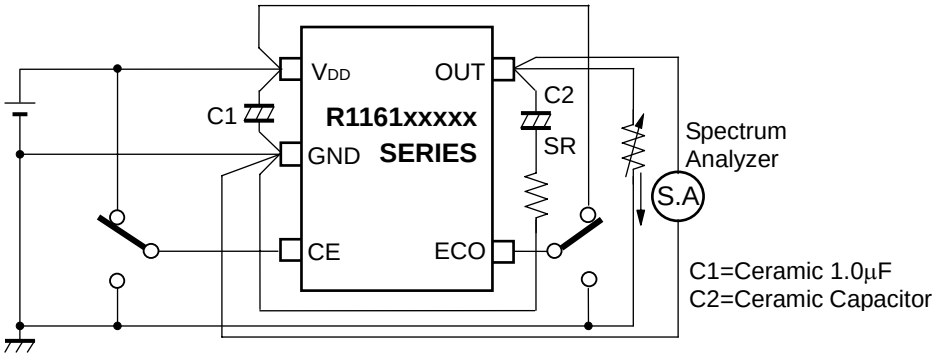

Fig.12 Output Noise Test Circuit(IOUT vs. ESR)

TYPICAL APPLICATION

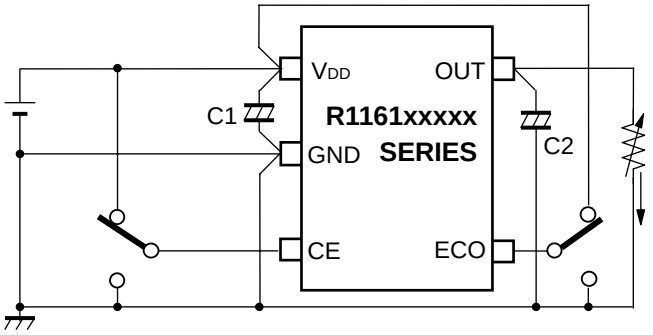

(External Components)
Output Capacitor; 1.0μF or more capacity ceramic Type (If VOUT<1.0V, Tantalum type is recommended)
Input Capacitor; 1.0μF or more capacity ceramic Type

TYPICAL CHARACTERISTICS

1) Output Voltage vs. Output Current

R1161x08xx (ECO=H)

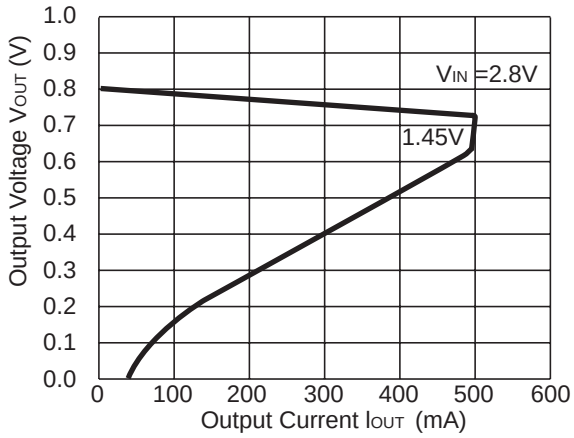

R1161x08xx (ECO=L)

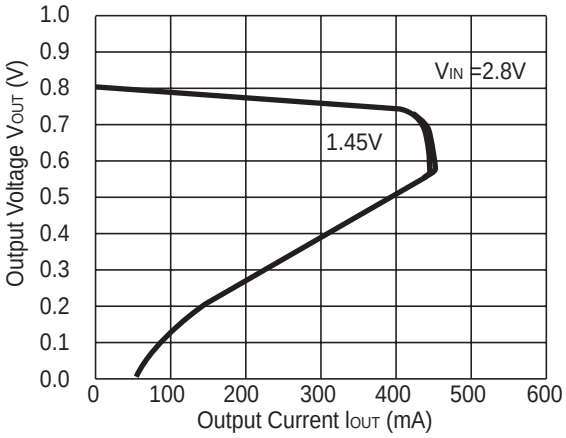

R1161x15xx (ECO=H)

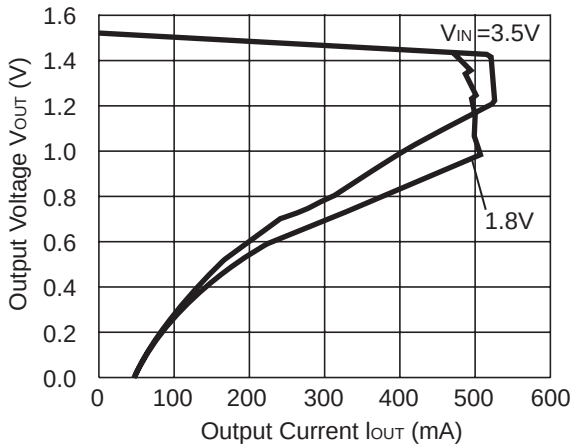

R1161x15xx (ECO=L)

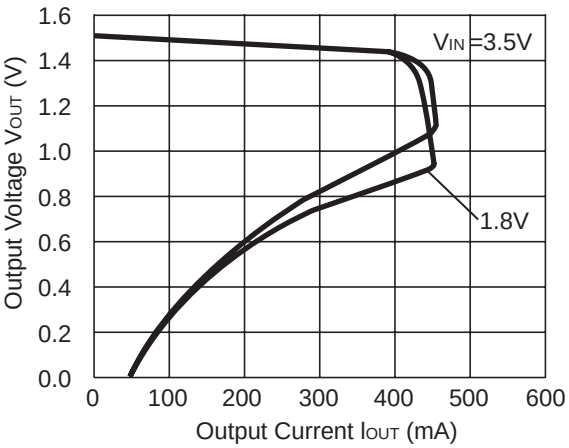

R1161x26xx (ECO=H)

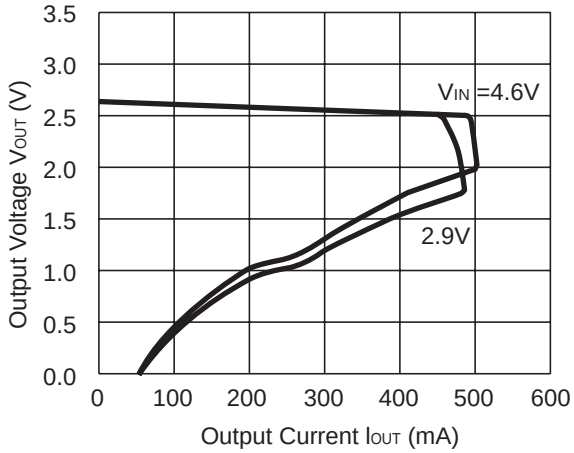

R1161x26xx (ECO=L)

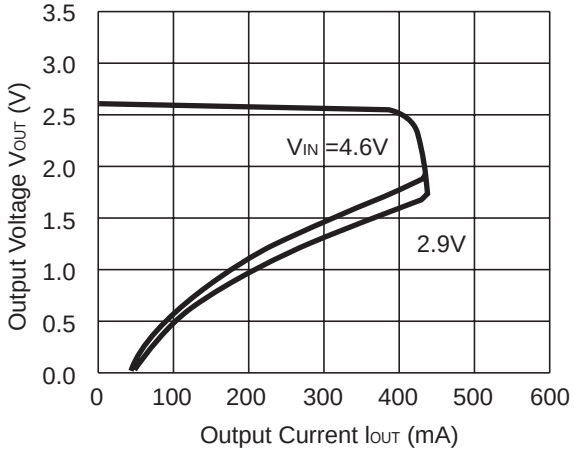

R1161x33xx (ECO=H)

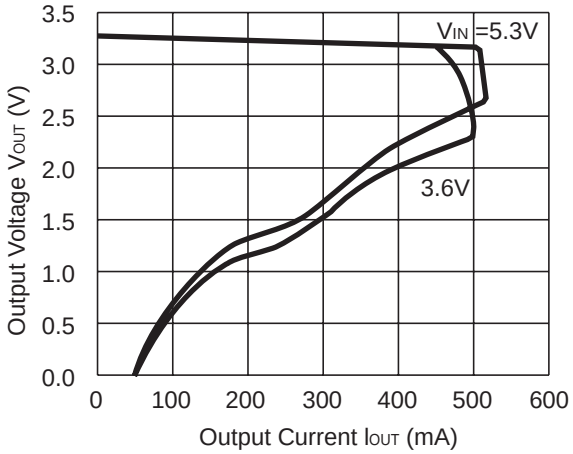

R1161x33xx (ECO=L)

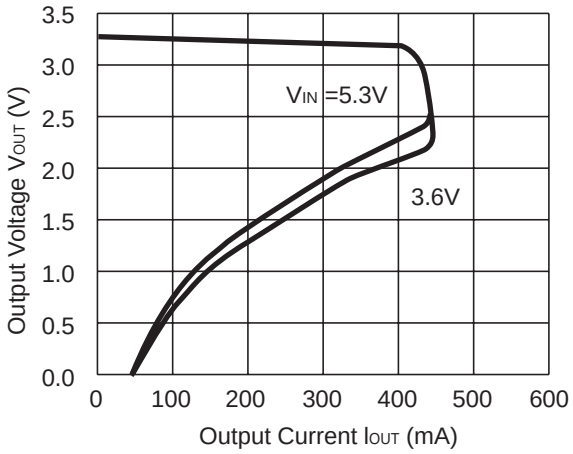

2) Output Voltage vs. Input Voltage

R1161x08xx (ECO=H)

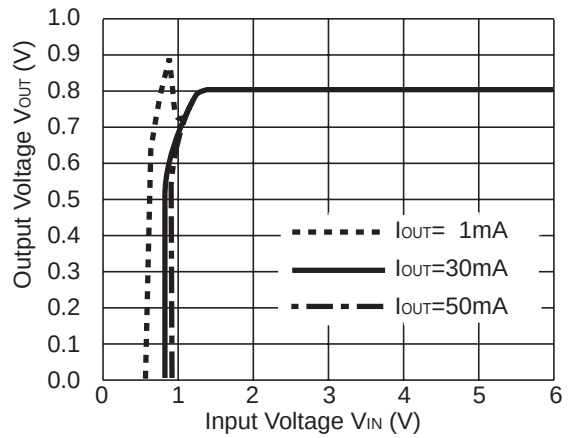

R1161x08xx (ECO=L)

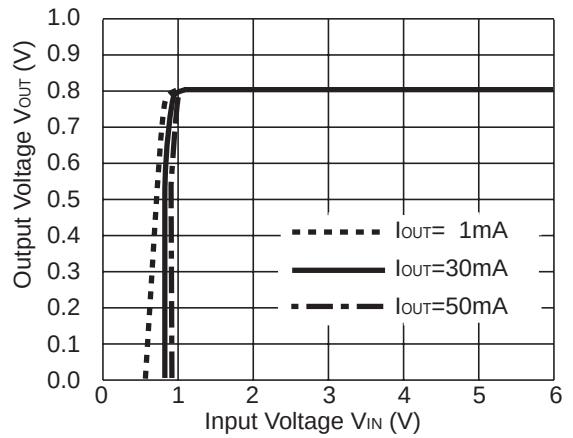

R1161x15xx (ECO=H)

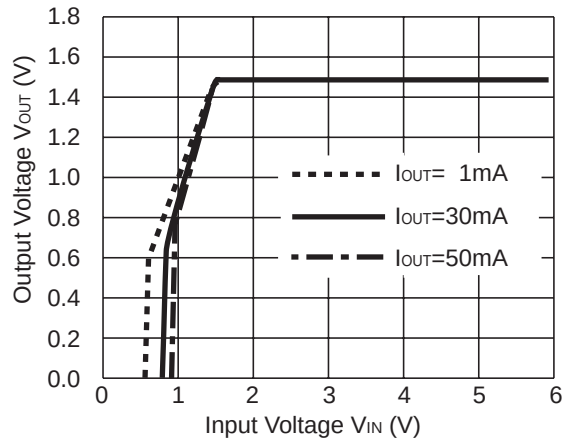

R1161x15xx (ECO=L)

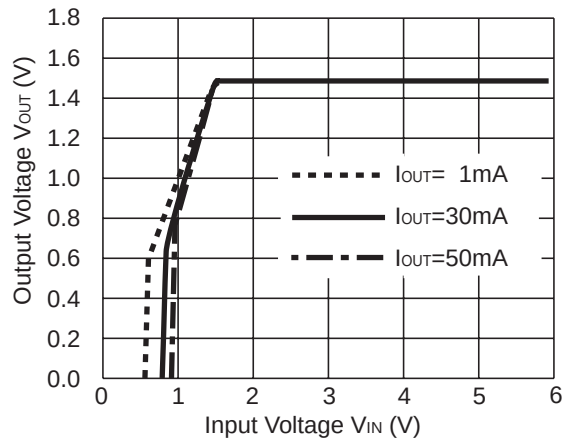

R1161x

R1161x26xx (ECO=H)

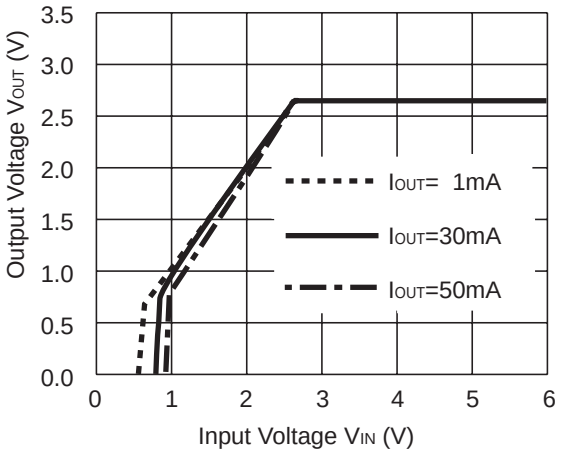

R1161x26xx (ECO=L)

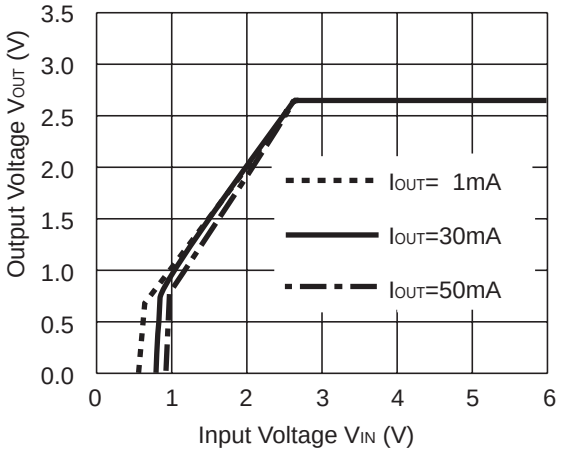

R1161x33xx (ECO=H)

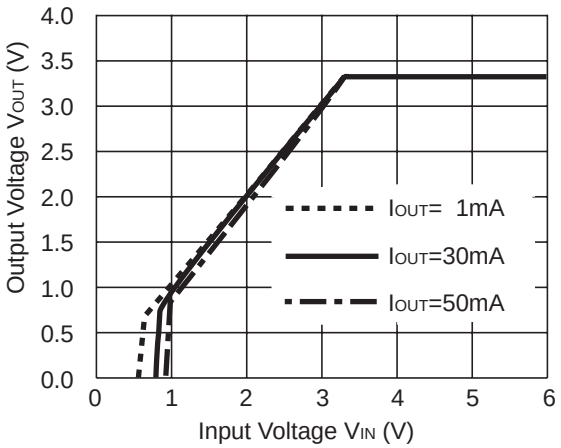

R1161x33xx (ECO=L)

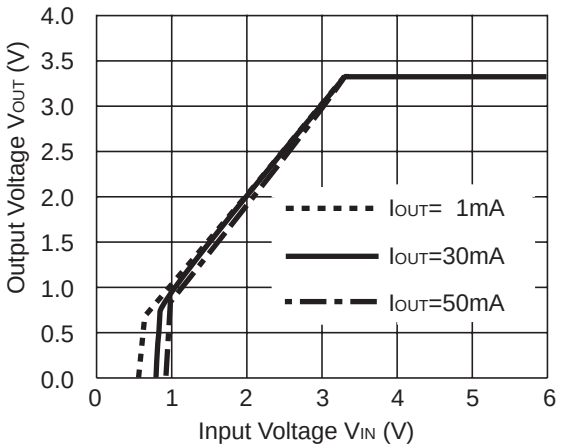

3) Supply Current vs. Input Voltage

R1161x08xx (ECO=H)

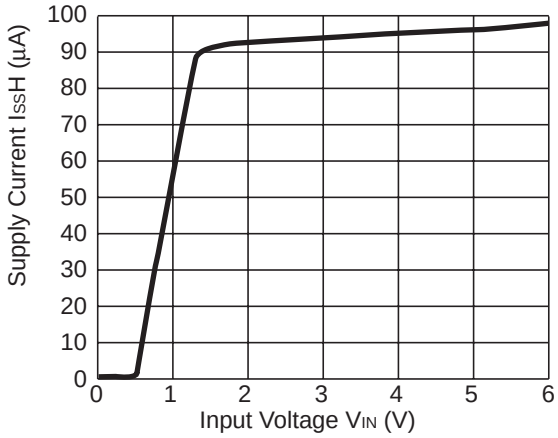

R1161x08xx (ECO=L)

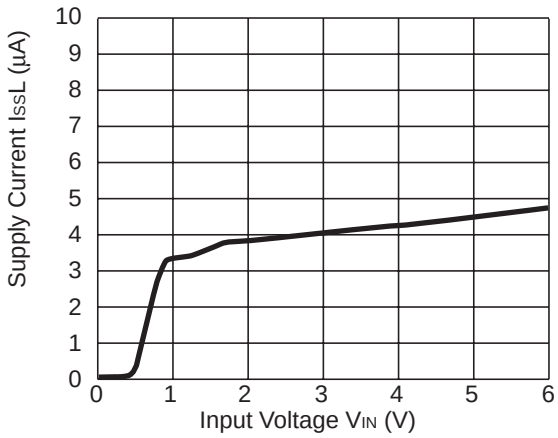

R1161x15xx (ECO=H)

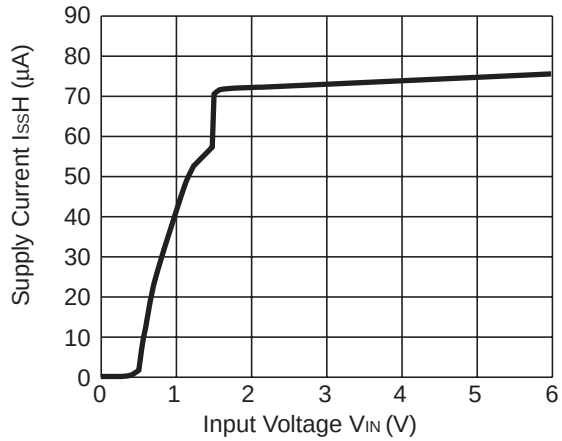

R1161x15xx (ECO=L)

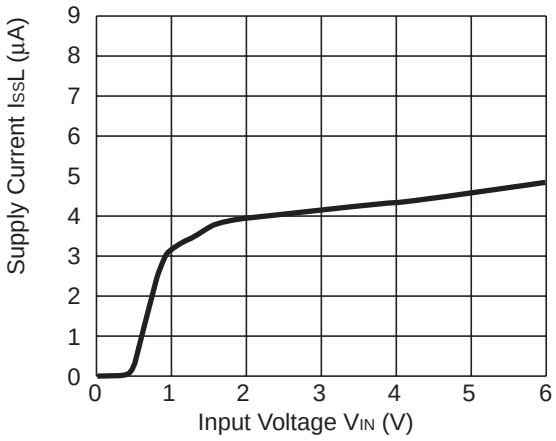

R1161x26xx (ECO=H)

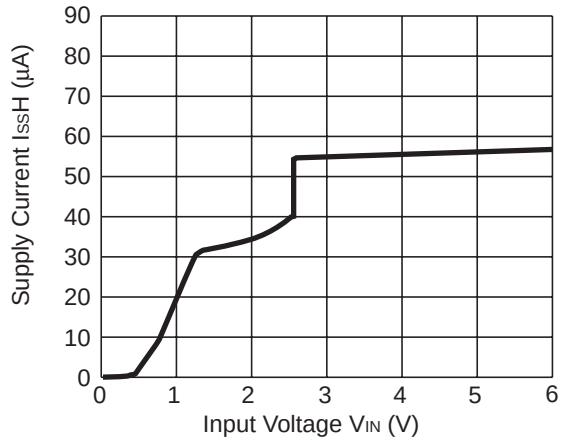

R1161x26xx (ECO=L)

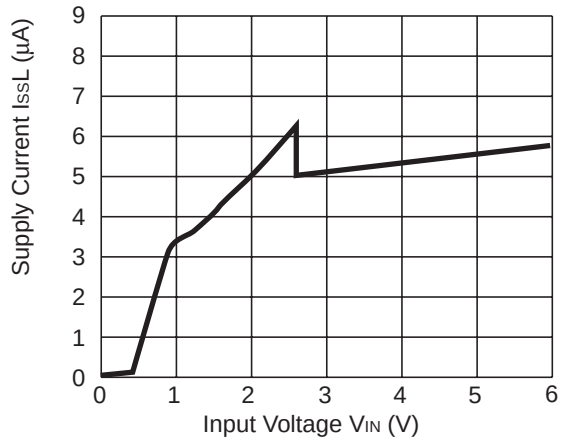

R1161x33xx (ECO=H)

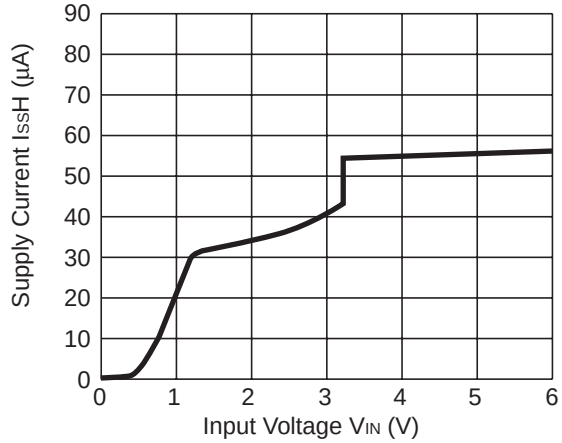

R1161x33xx (ECO=L)

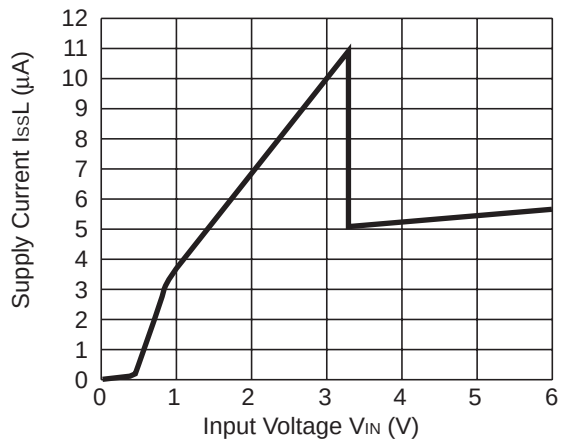

4) Output Voltage vs. Temperature

R1161x08xx (ECO=H)

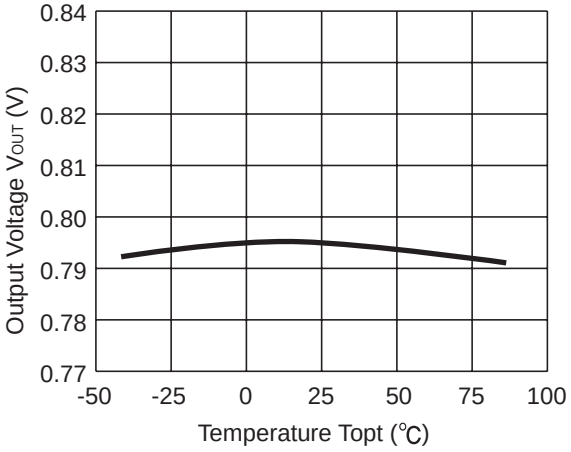

R1161x08xx (ECO=L)

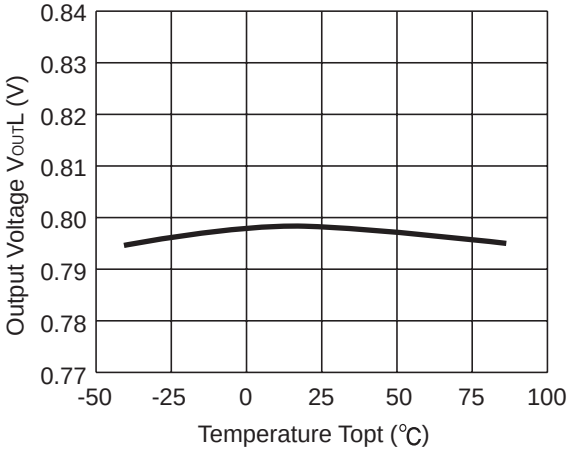

R1161x15xx (ECO=H)

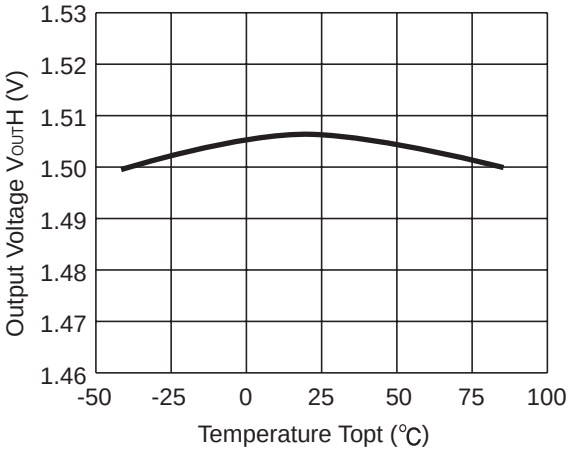

R1161x15xx (ECO=L)

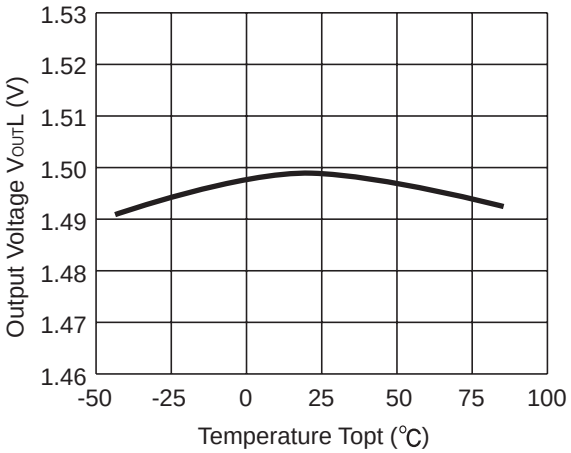

R1161x26xx (ECO=H)

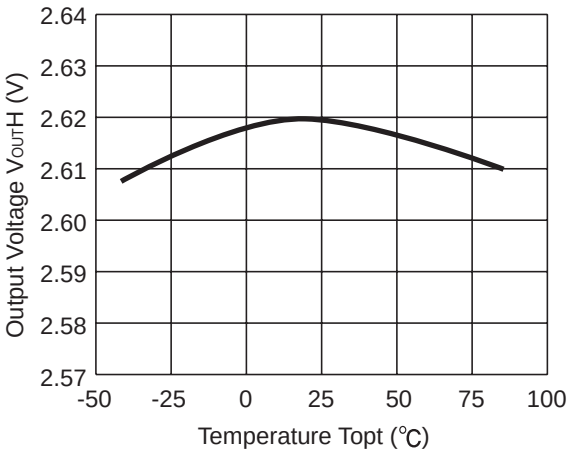

R1161x26xx (ECO=L)

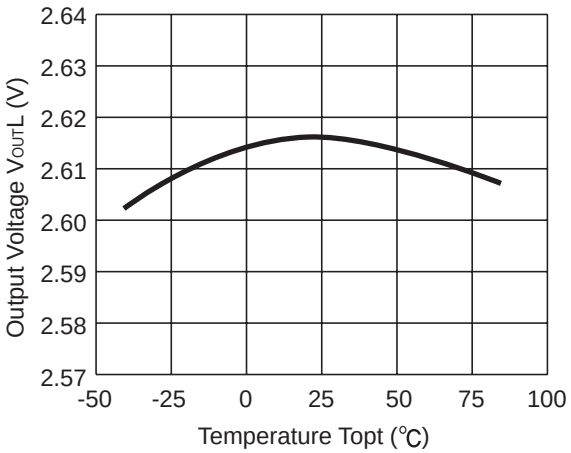

R1161x33xx (ECO=H)

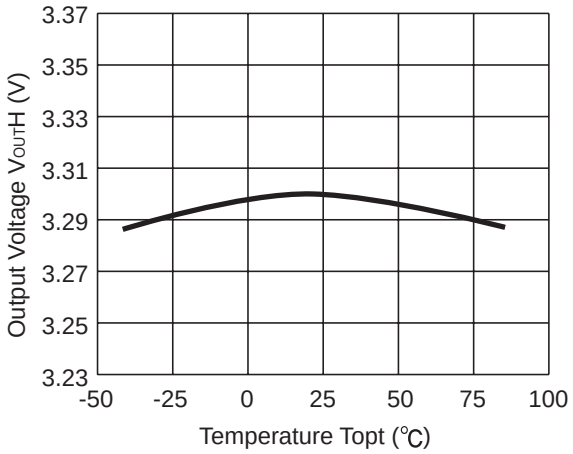

R1161x33xx (ECO=L)

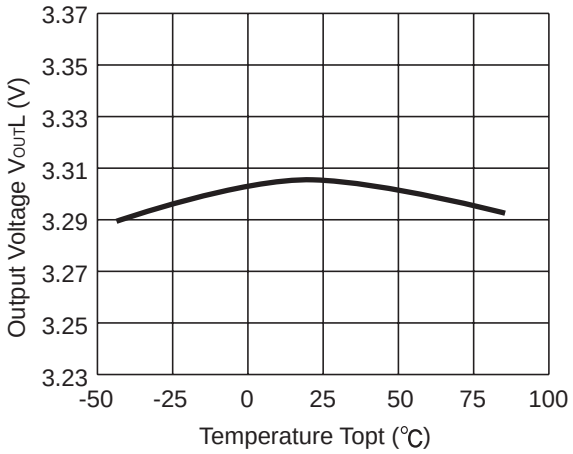

5) Supply Current vs. Temperature

R1161x08xx (ECO=H)

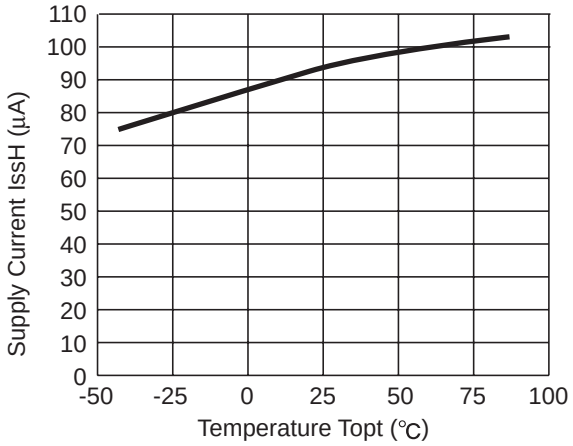

R1161x08xx (ECO=L)

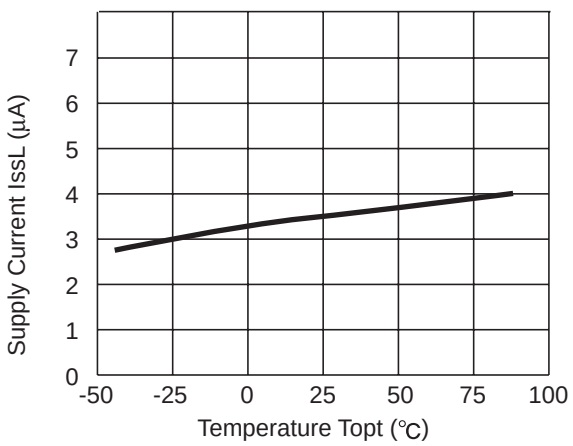

R1161x15xx (ECO=H)

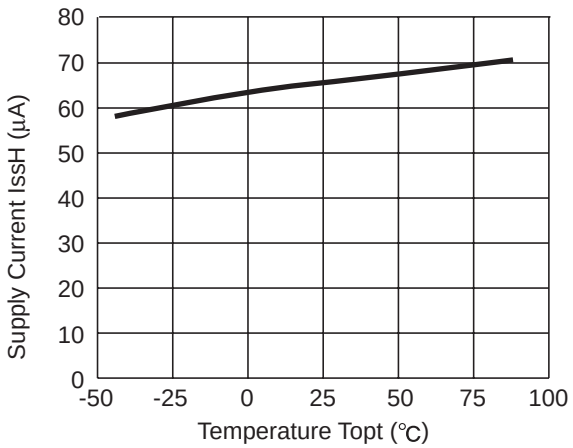

R1161x15xx (ECO=L)

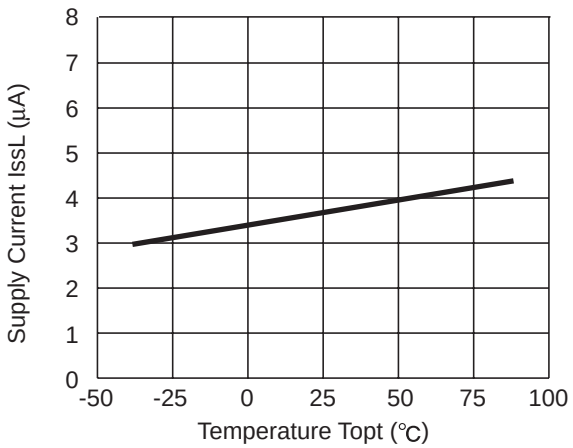

R1161x

R1161x26xx (ECO=H)

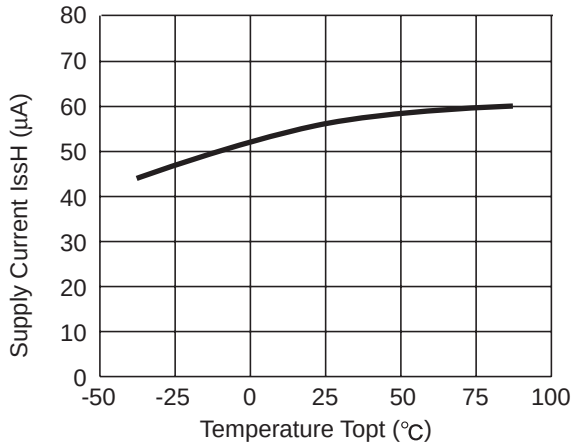

R1161x26xx (ECO=L)

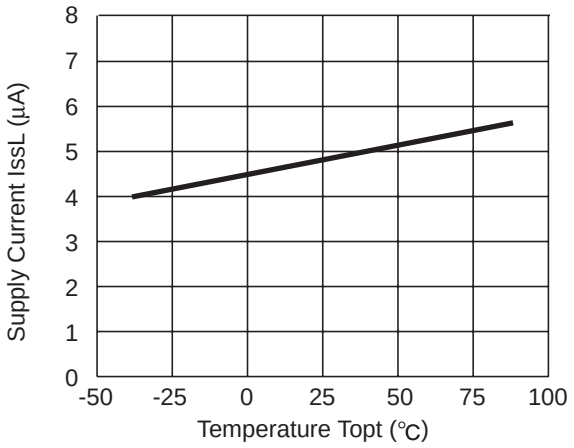

R1161x33xx (ECO=H)

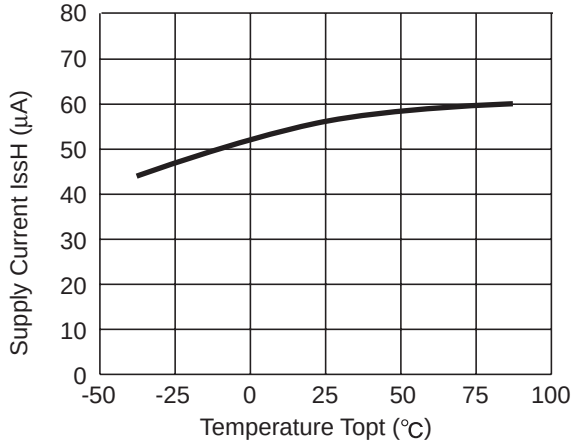

R1161x33xx (ECO=L)

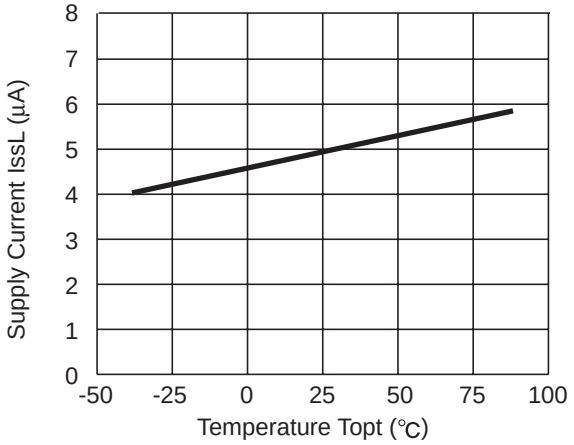

6) Dropout Voltage vs. Output Current

R1161x08xx (ECO=H)

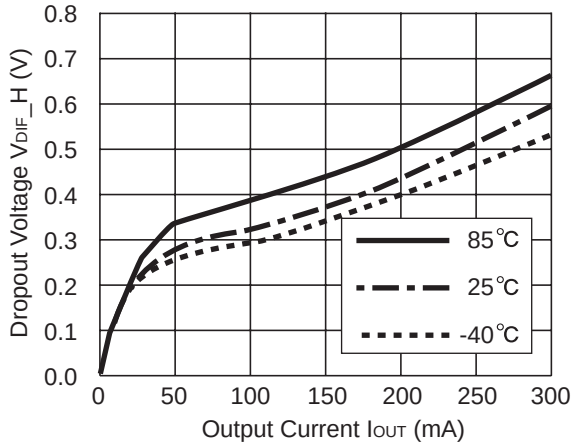

R1161x08xx (ECO=L)

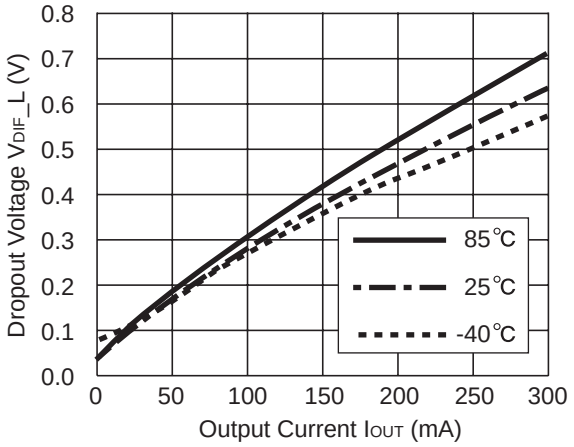

R1161x09xx (ECO=H)

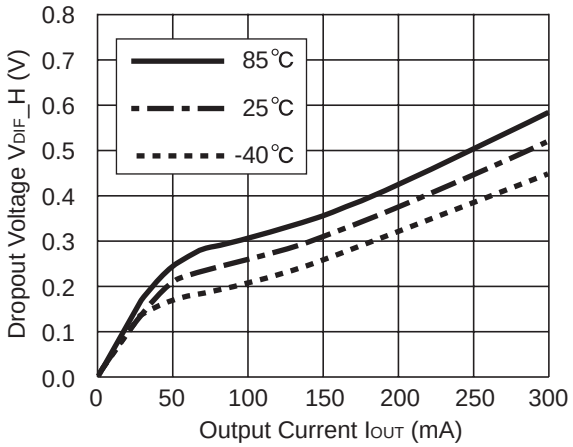

R1161x09xx (ECO=L)

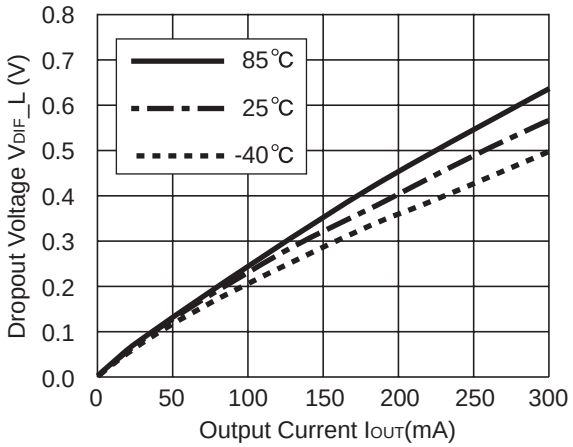

R1161x10xx (ECO=H)

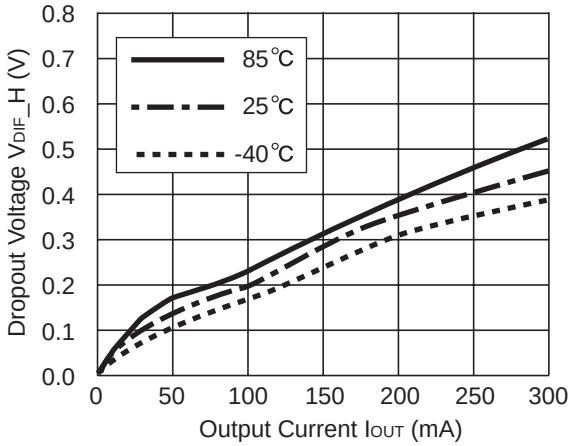

R1161x10xx (ECO=L)

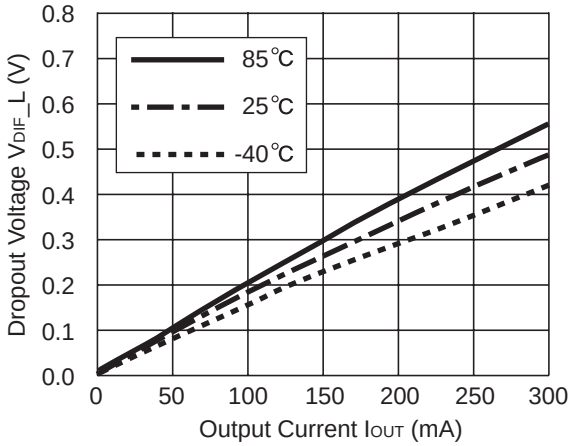

R1161x15xx (ECO=H)

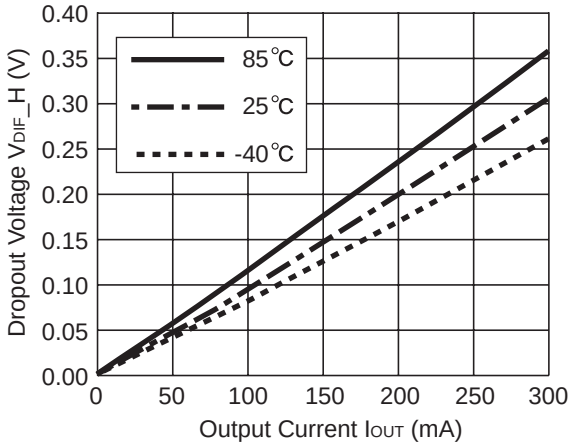

R1161x15xx (ECO=L)

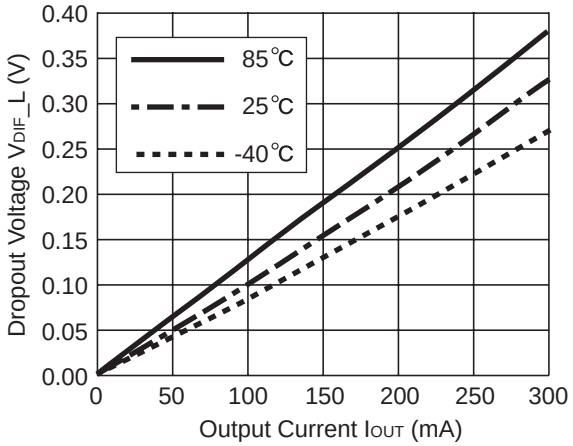

R1161x

R1161x26xx (ECO=H)

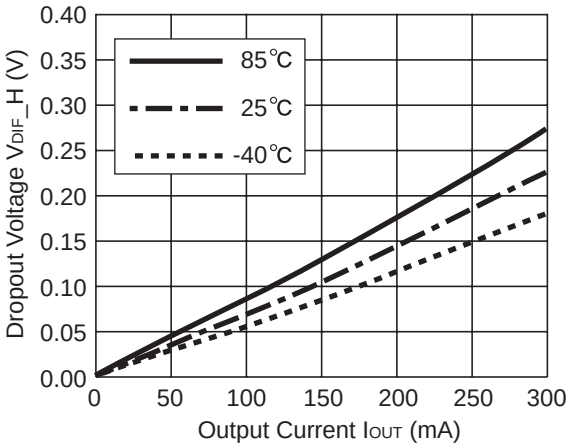

R1161x26xx (ECO=L)

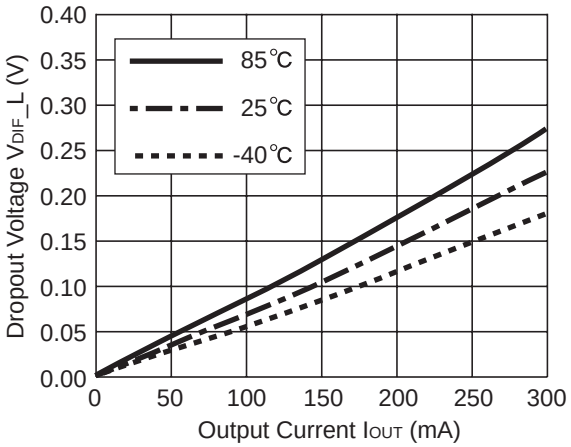

R1161x33xx (ECO=H)

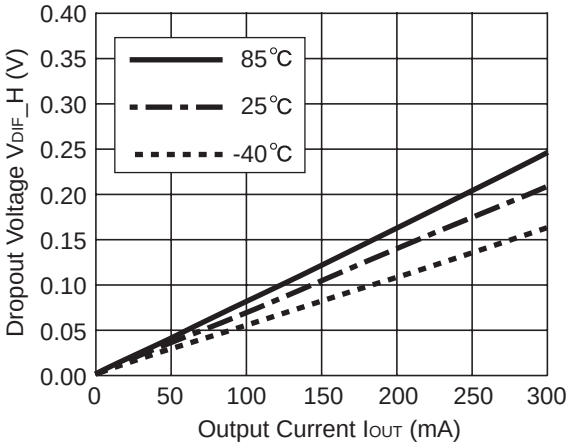

R1161x33xx (ECO=L)

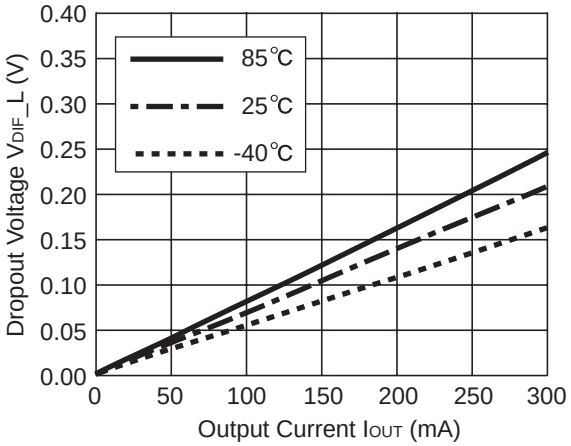

7) Dropout Voltage vs. Set Output Voltage (Topt=25°C)

R1161xxx1x (ECO=H)

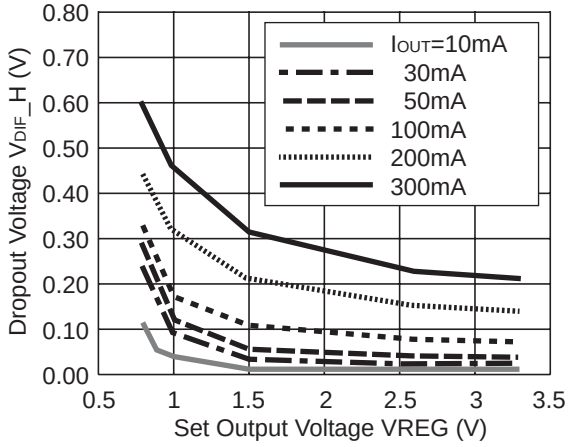

R1161xxx1x (ECO=L)

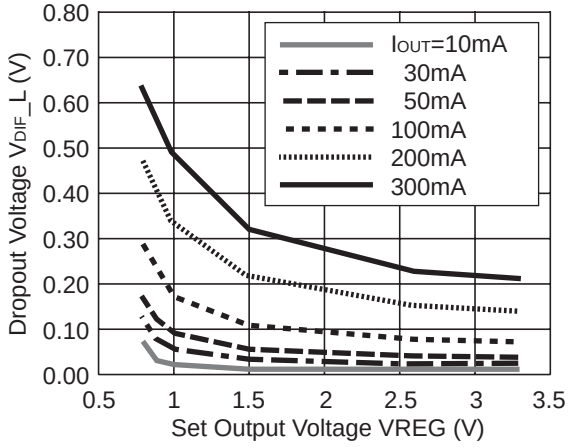

8) Ripple Rejection vs. Input Bias (Topt=25°C CIN=none, COUT=Ceramic 1.0µF Ripple 0.2VP-P)

R1161x26xx (IOUT=1mA)

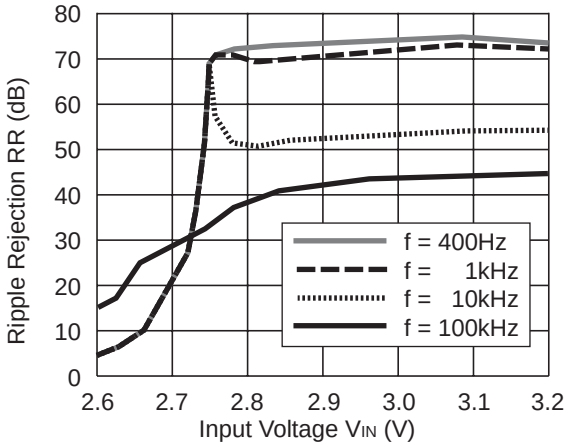

R1161x26xx (IOUT=30mA)

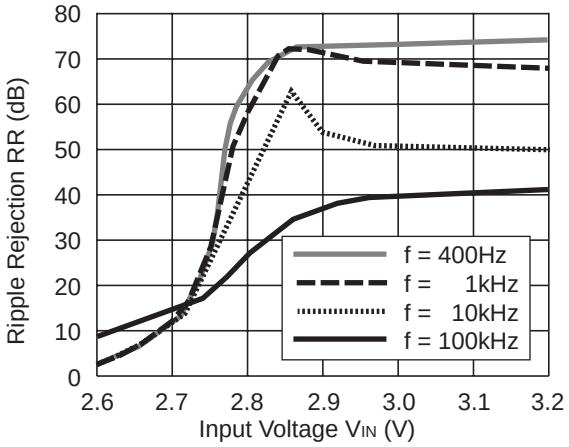

R1161x26xx (IOUT=50mA)

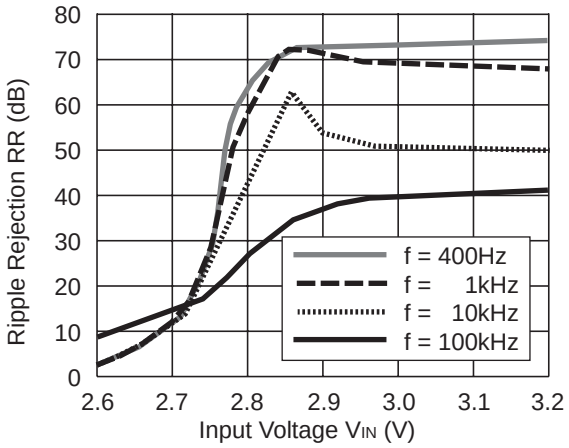

9) Ripple Rejection vs. Frequency (CIN=none)

R1161x08xx (ECO=H)

VIN=1.8VDC+0.2Vp-p,
COUT=Tantal 1.0µF

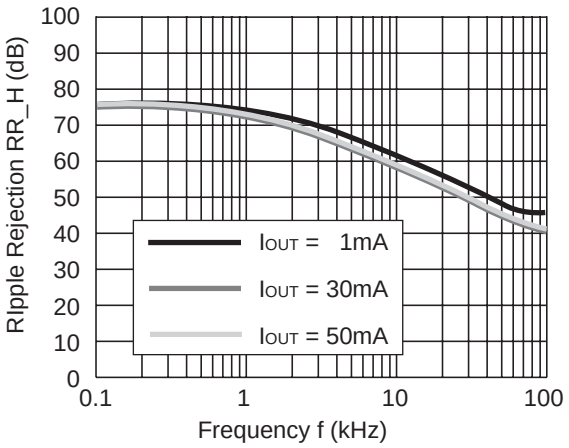

R1161x08xx (ECO=L)

VIN=1.8VDC+0.2Vp-p,
COUT = Tantal 1.0µF

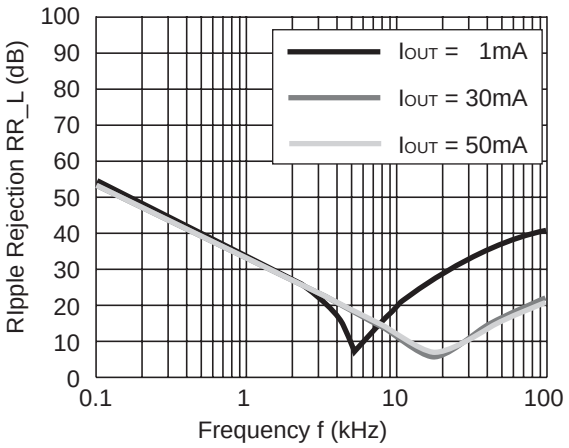

R1161x

R1161x08xx (ECO=H)

V_{IN}=1.8V_{DC}+0.2Vp-p,
C_{OUT}=Tantal 2.2µF

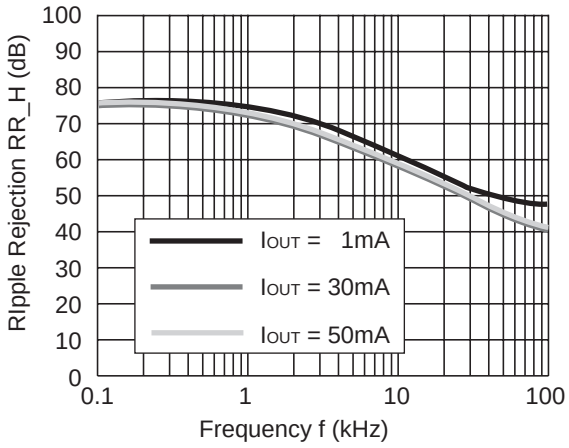

R1161x08xx (ECO=L)

V_{IN}=1.8V_{DC}+0.2Vp-p,
C_{OUT} = Tantal 2.2µF

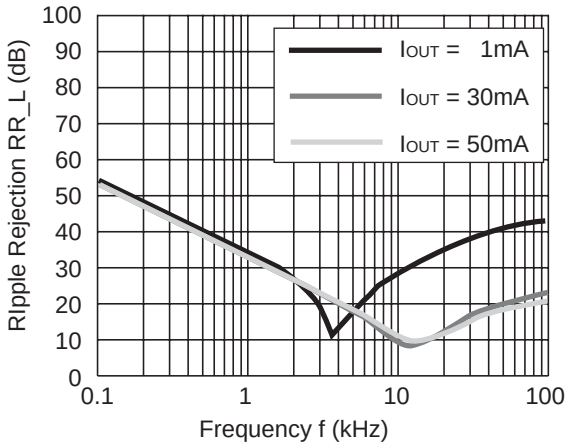

R1161x10xx (ECO=H)

V_{IN}=2.0V_{DC}+0.2Vp-p,
C_{OUT}=Ceramic 1.0µF

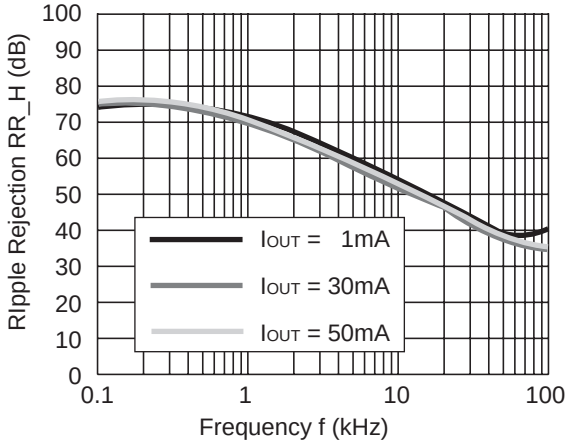

R1161x10xx (ECO=L)

V_{IN}=2.0V_{DC}+0.2Vp-p,
C_{OUT}=Ceramic 1.0µF

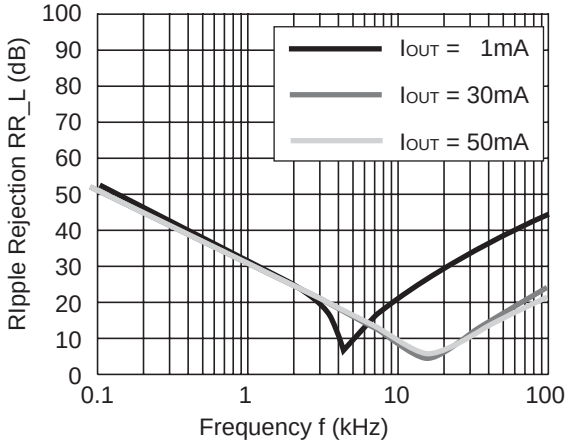

R1161x10xx (ECO=H)

V_{IN}=2.0V_{DC}+0.2Vp-p,
C_{OUT}=Ceramic 2.2µF

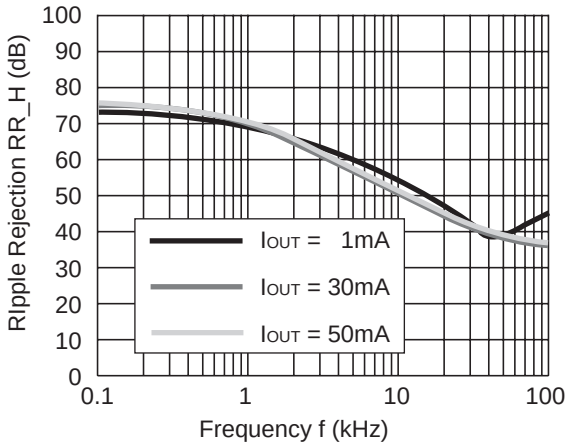

R1161x10xx (ECO=L)

V_{IN}=2.0V_{DC}+0.2Vp-p,
C_{OUT}=Ceramic 2.2µF

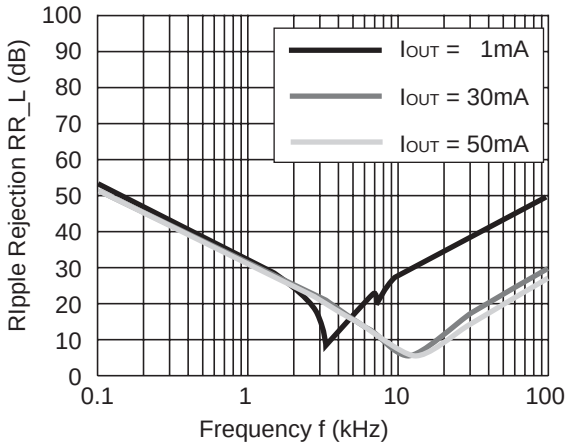

R1161x15xx (ECO=H)

V_{IN}=2.5V_{DC}+0.2Vp-p,
C_{OUT}=1.0µF

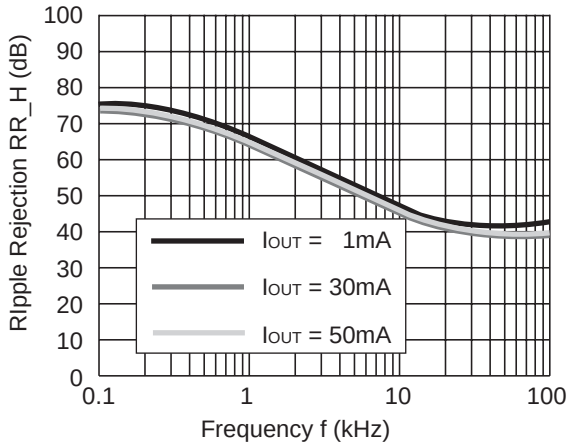

R1161x15xx (ECO=L)

V_{IN}=2.5V_{DC}+0.2Vp-p,
C_{OUT}=1.0µF

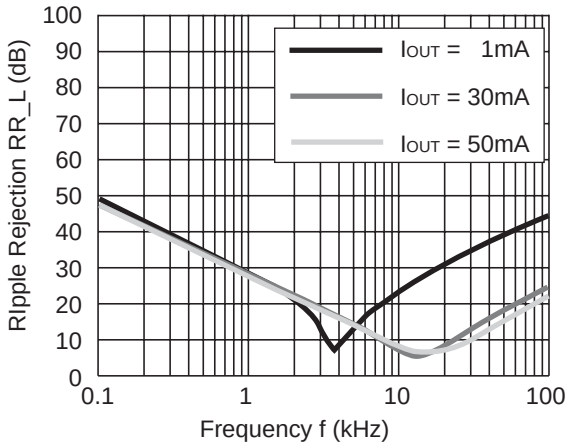

R1161x15xx (ECO=H)

V_{IN}=2.5V_{DC}+0.2Vp-p,
C_{OUT}=2.2µF

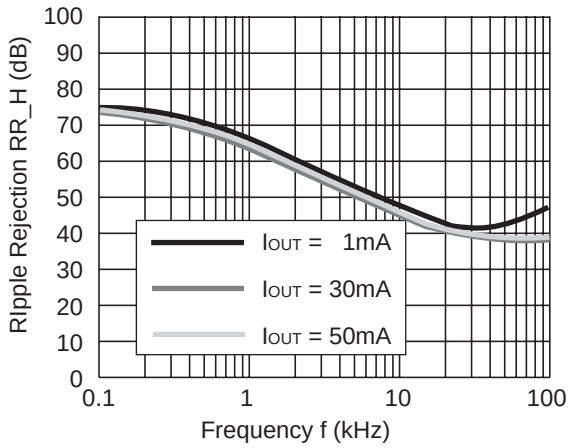

R1161x15xx (ECO=L)

V_{IN}=2.5V_{DC}+0.2Vp-p,
C_{OUT}=2.2µF

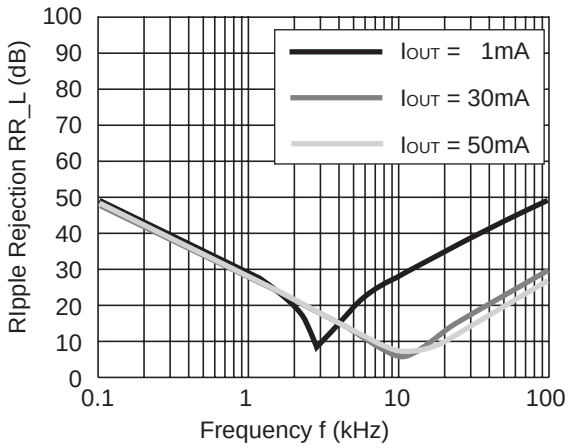

R1161x26xx (ECO=H)

V_{IN}=3.6V_{DC}+0.2Vp-p,
C_{OUT} = Ceramic 1.0µF

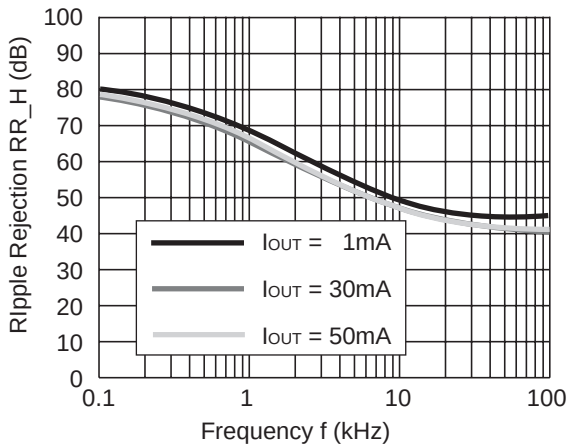

R1161x26xx (ECO=L)

V_{IN}=3.6V_{DC}+0.2Vp-p,
C_{OUT} = Ceramic 1.0µF

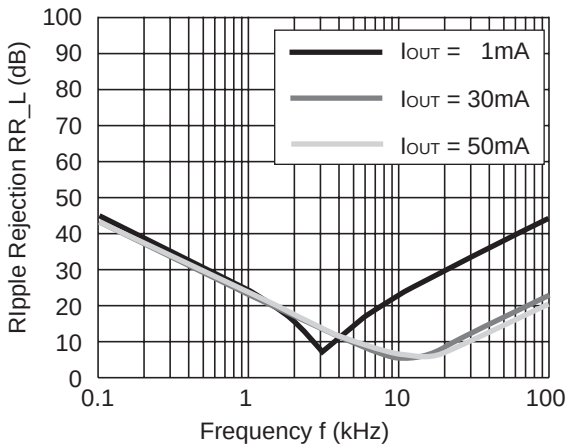

R1161x

R1161x26xx (ECO=H)

V_{IN}=3.6V_{DC}+0.2Vp-p,
C_{OUT} = Ceramic 2.2µF

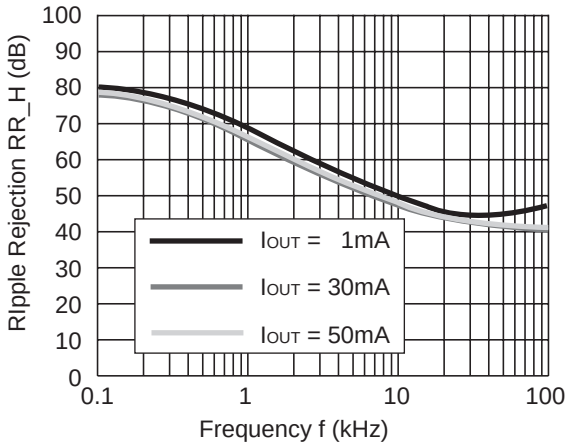

R1161x26xx (ECO=L)

V_{IN}=3.6V_{DC}+0.2Vp-p,
C_{OUT} = Ceramic 2.2µF

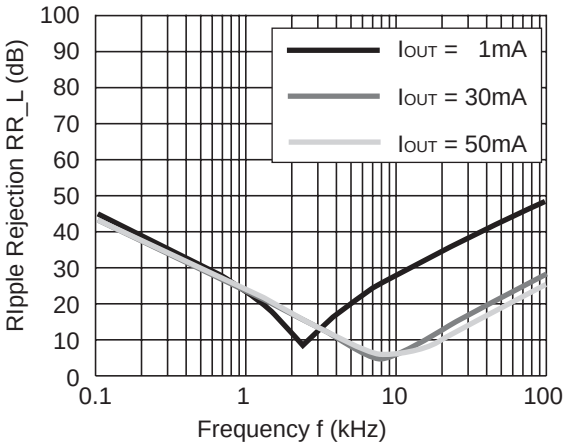

R1161x33xx (ECO=H)

V_{IN}=4.3V_{DC}+0.2Vp-p,
C_{OUT} = Ceramic 1.0µF

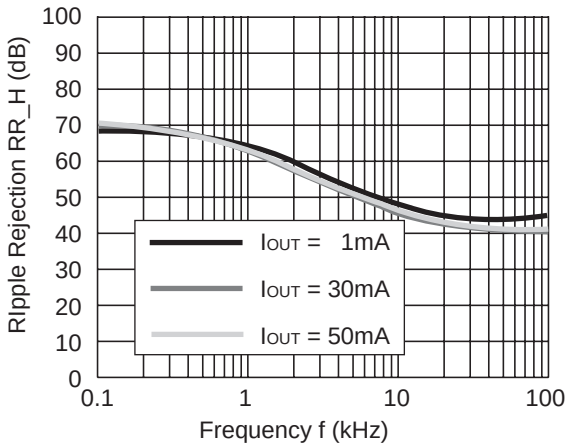

R1161x33xx (ECO=L)

V_{IN}=4.3V_{DC}+0.2Vp-p,
C_{OUT}= Ceramic 1.0µF

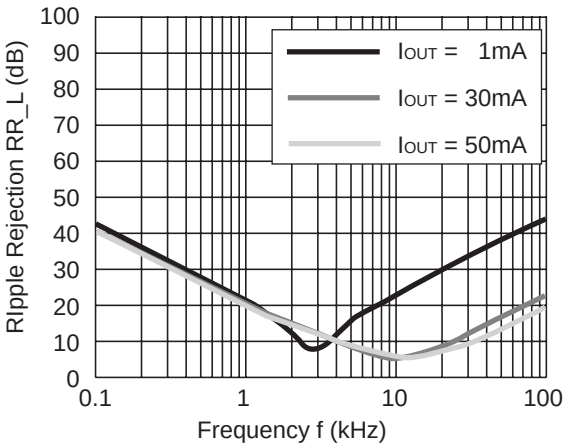

R1161x33xx (ECO=H)

V_{IN}=4.3V_{DC}+0.2Vp-p,
C_{OUT}= Ceramic 2.2µF

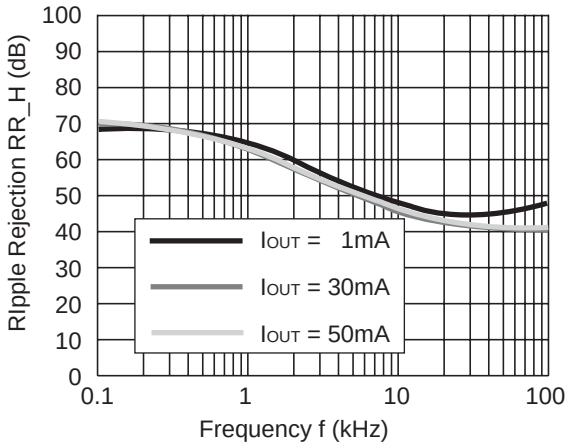

R1161x33xx (ECO=L)

V_{IN}=4.3V_{DC}+0.2Vp-p,
C_{OUT}= Ceramic 2.2µF

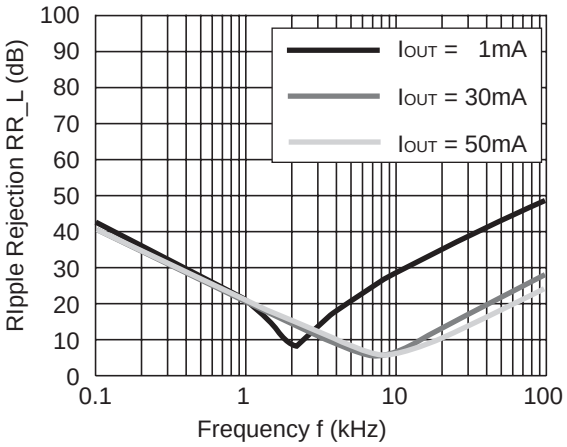

10) Input Transient Response (C_{IN} = none, tr=tf=5µs)

R1161x08xx (ECO=H)

I_{OUT}=30mA,
C_{OUT} = Tantalum 1.0µF

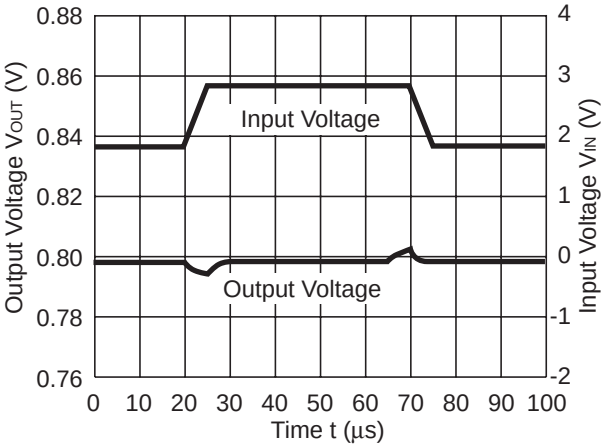

R1161x08x (ECO=L)

I_{OUT}=10mA,
C_{OUT} = Tantalum 1.0µF

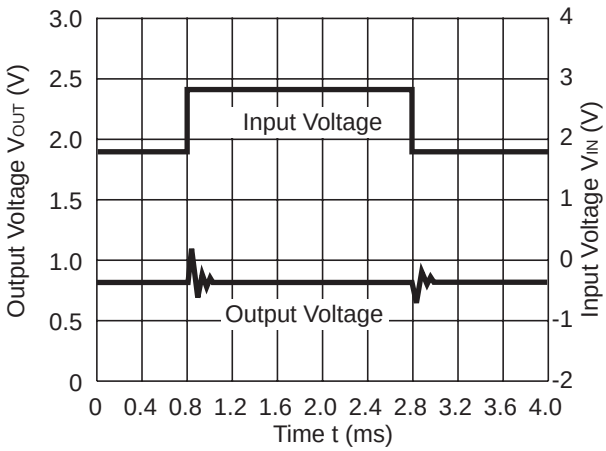

R1161x10xx (ECO=H)

I_{OUT}=30mA,
C_{OUT} = Ceramic 1.0µF

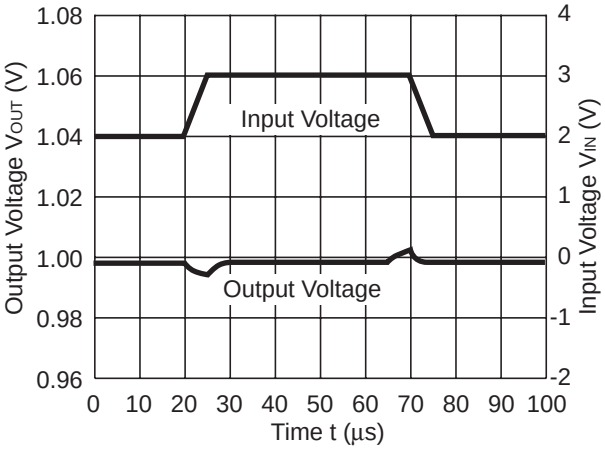

R1161x10xx (ECO=L)

I_{OUT}=10mA,
C_{OUT}= Ceramic 1.0µF

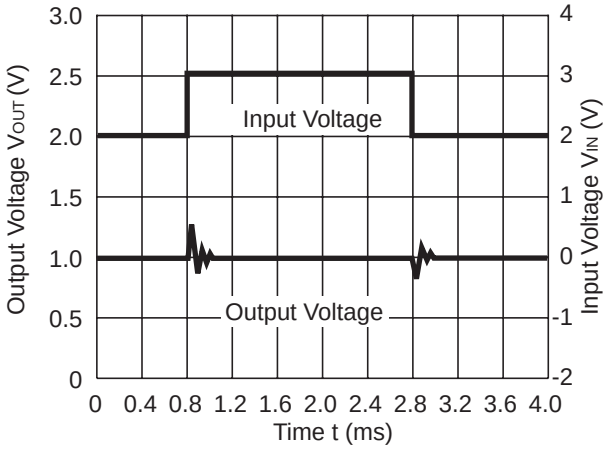

R1161x26xx (ECO=H)

I_{OUT}=30mA,
C_{OUT}= Ceramic 1.0µF

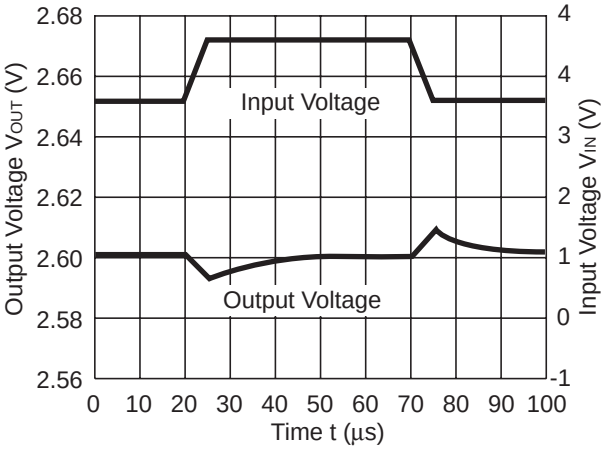

R1161x26xx (ECO=L)

I_{OUT}=10mA,
C_{OUT}= Ceramic 1.0µF

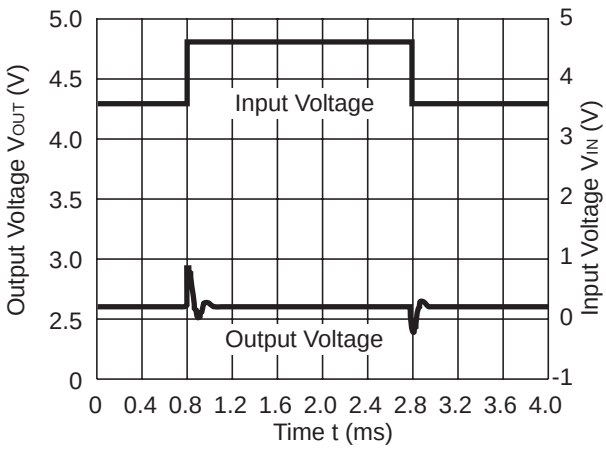

11) Load Transient Response (tr=tf=0.5µs)

R1161x08xx (ECO=H)

VIN=1.8V
CIN= tantalum 1.0µF,COUT = tantalum 1.0µF

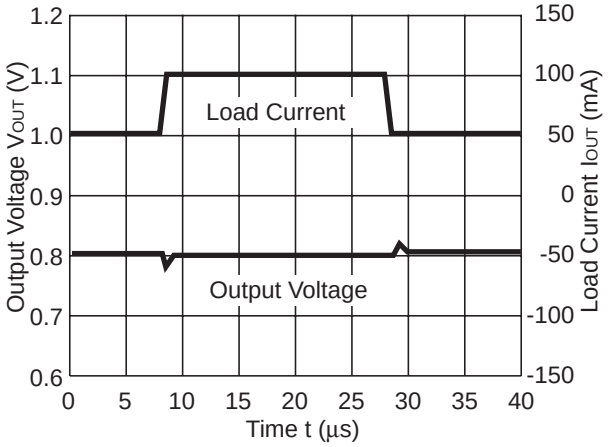

R1161x08xx (ECO=H)

VIN=1.8V
CIN = tantalum 1.0µF, COUT = tantalum 1.0µF

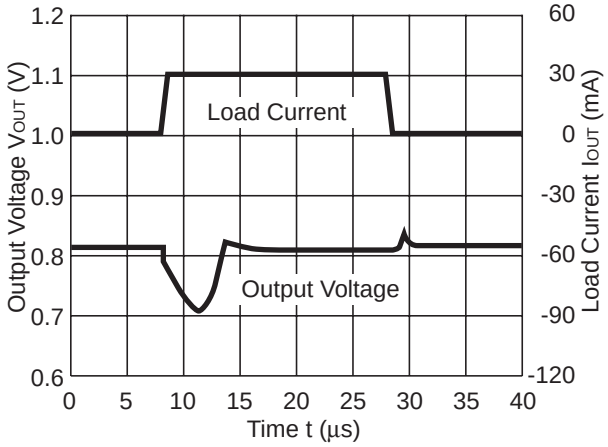

R1161x08xx (ECO=H)

VIN=1.8V,
CIN = tantalum 1.0µF COUT = tantalum 2.2µF

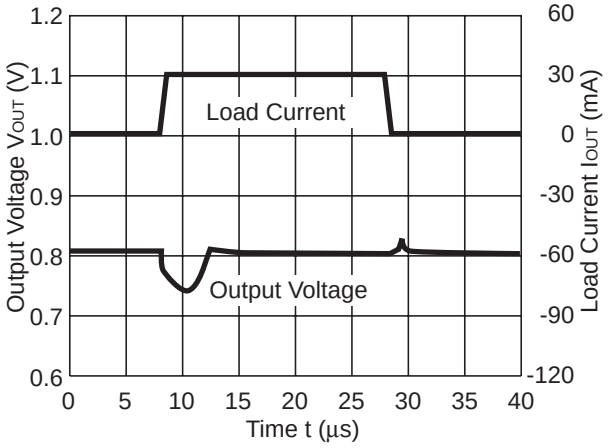

R1161x08xx (ECO=L)

VIN=1.8V,
CIN = tantalum 1.0µF COUT= tantalum 1.0µF

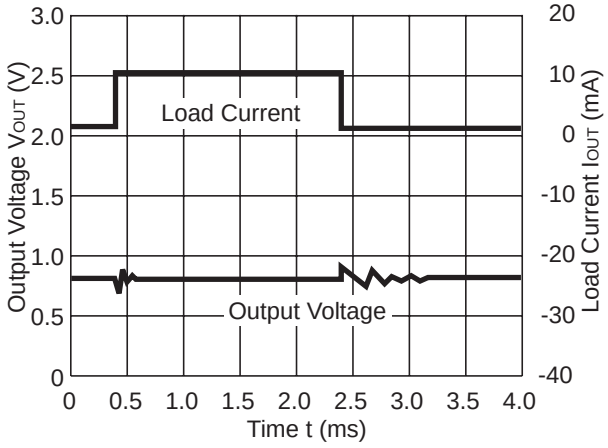

R1161x08xx (ECO=L)

VIN=1.8V,
CIN = tantalum 1.0µF COUT = Tantalum 2.2µF

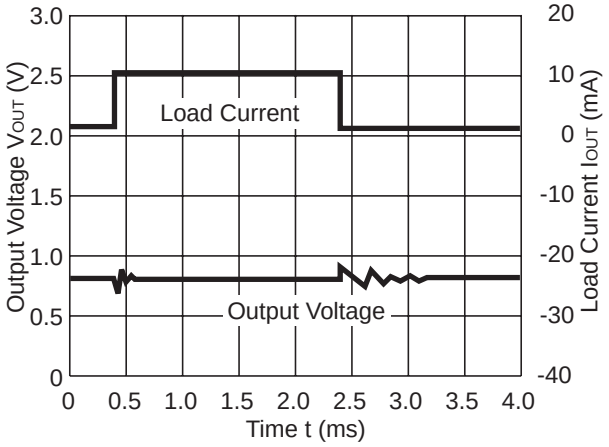

R1161x10xx (ECO=H)

VIN=2.0V,
CIN = Ceramic 1.0µF COUT= Ceramic 1.0µF

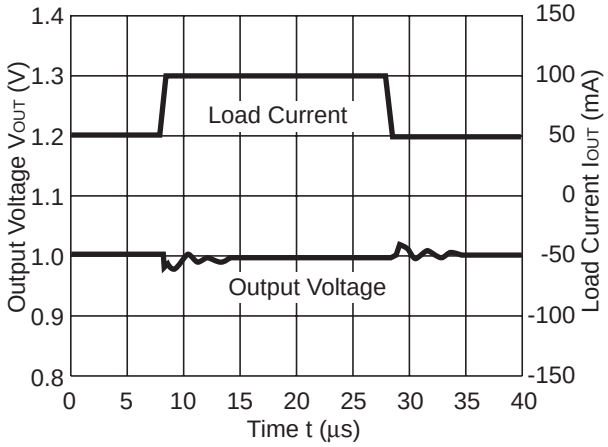

R1161x10xx (ECO=H)

V_{IN}=2.0V,
C_{IN}= Ceramic 1.0µF, C_{OUT} = Ceramic 2.2µF

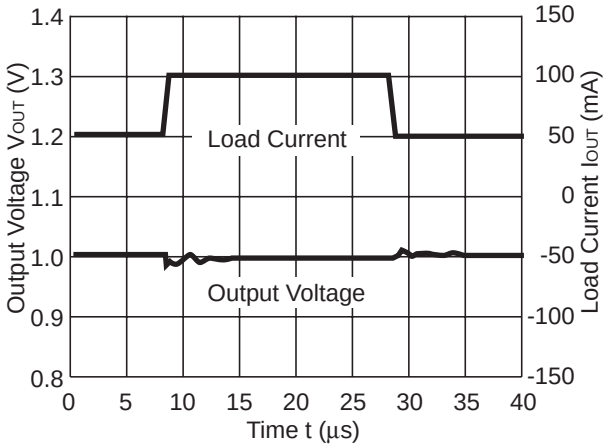

R1161x10xx (ECO=H)

V_{IN}=2.0V,
C_{IN} = Ceramic 1.0µF C_{OUT} = Ceramic 1.0µF

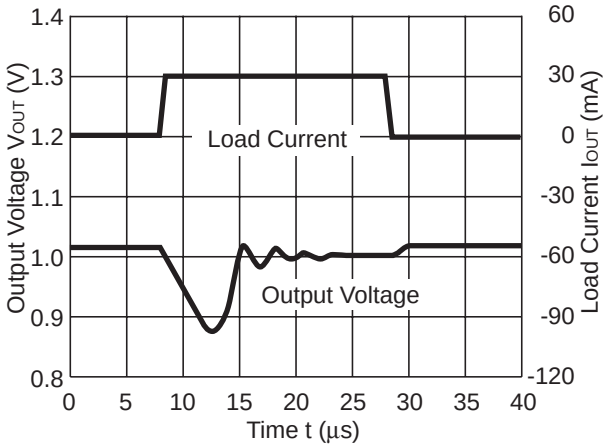

R1161x10xx (ECO=H)

V_{IN}=2.0V,
C_{IN} = Ceramic 1.0µF C_{OUT} = Ceramic 2.2µF

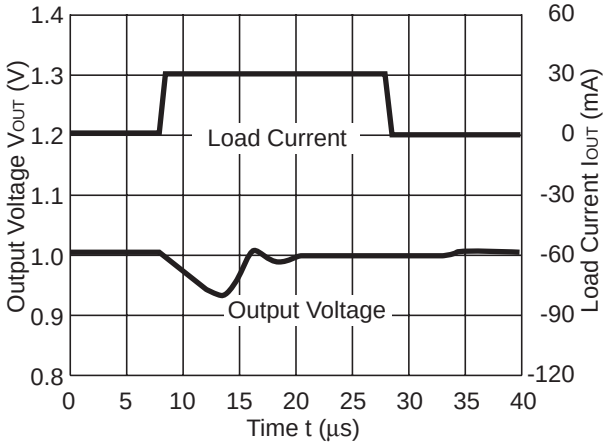

R1161x10xx (ECO=H)

V_{IN}=2.0V,
C_{IN} = Ceramic 1.0µF C_{OUT} = Ceramic 1.0µF

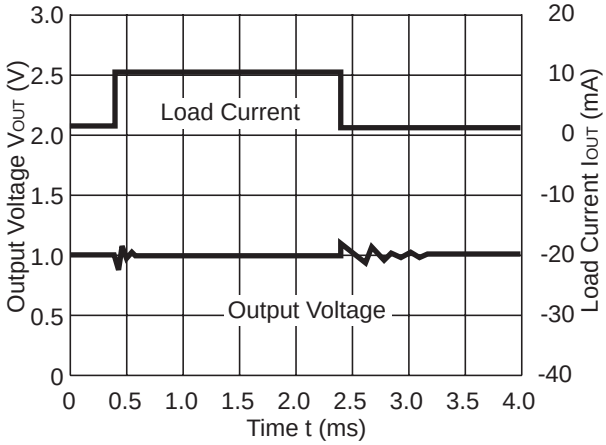

R1161x10xx (ECO=L)

V_{IN}=2.0V,
C_{IN} = Ceramic 1.0µF C_{OUT} = Ceramic 2.2µF

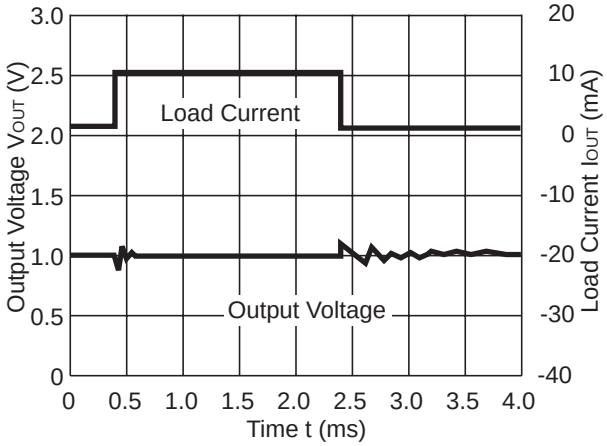

R1161x10xx (ECO=L)

V_{IN}=2.0V,
C_{IN} = Ceramic 1.0µF C_{OUT} = Ceramic 1.0µF

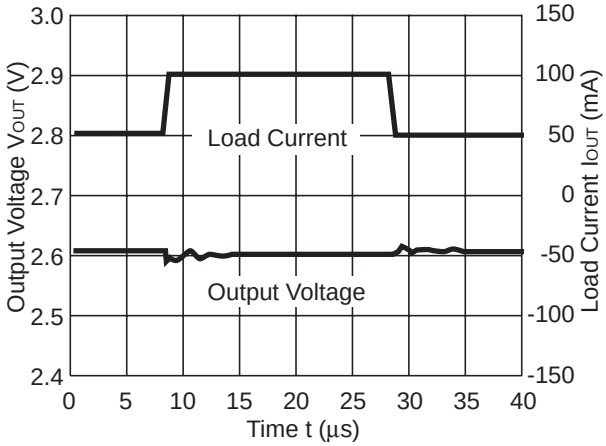

R1161x

R1161x26xx (ECO=H)

VIN=3.6V,
CIN = Ceramic 1.0µF COUT = Ceramic 2.2µF

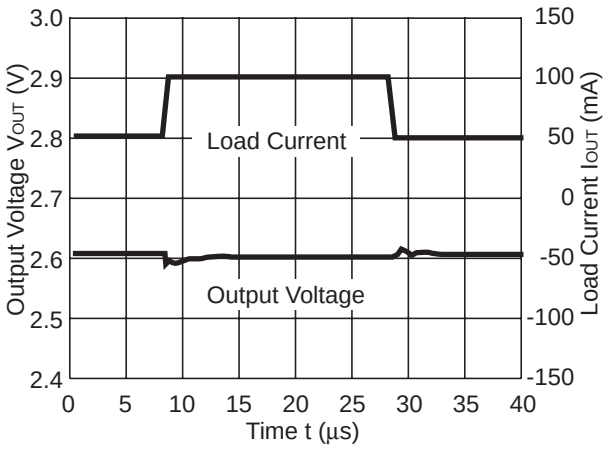

R1161x26xx (ECO=H)

VIN=3.6V,
CIN = Ceramic 1.0µF COUT = Ceramic 1.0µF

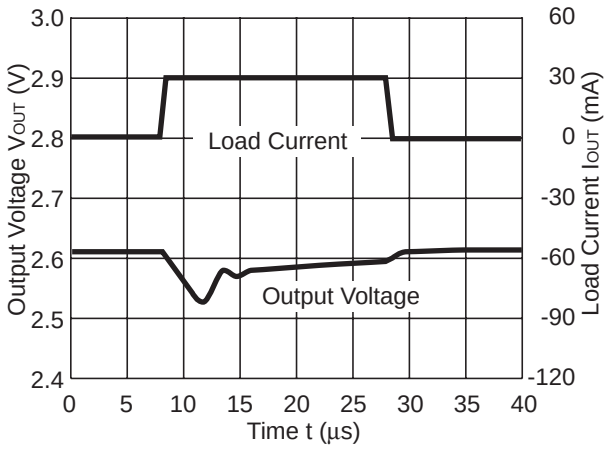

R1161x26xx (ECO=H)

VIN=3.6V,
CIN = Ceramic 1.0µF COUT = Ceramic 2.2µF

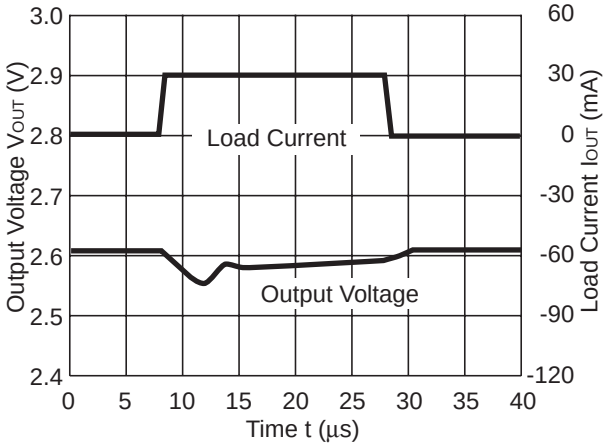

R1161x26xx (ECO=L)

VIN=3.6V,
CIN = Ceramic 1.0µF COUT = Ceramic 1.0µF

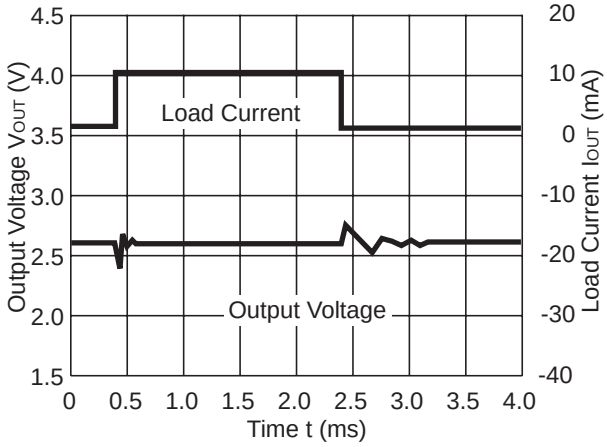

R1161x26xx (ECO=L)

VIN=3.6V,
CIN = Ceramic 1.0µF COUT = Ceramic 2.2µF

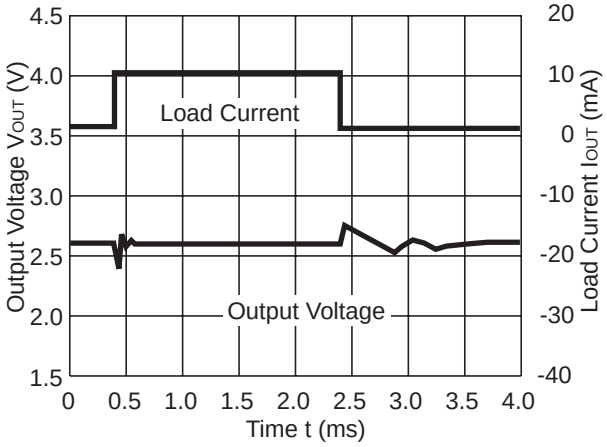

12) Turn on speed with CE pin

R1161x08xx (ECO=H)

V_{IN}=1.8V, C_{IN} = Tantalum 1.0µF
C_{OUT} = Tantalum 1.0µF

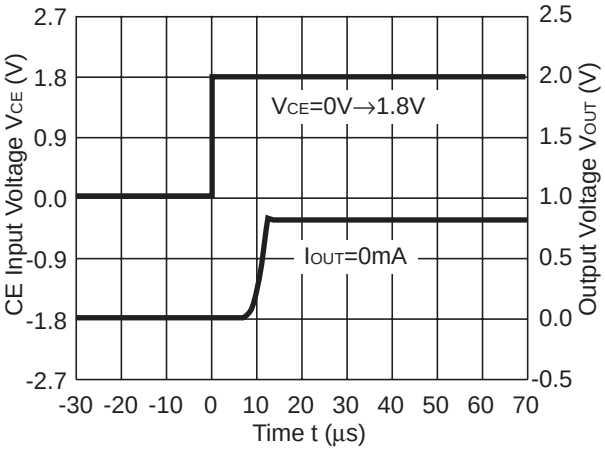

R1161x08xx (ECO=L)

V_{IN}=1.8V, C_{IN} = Tantalum 1.0µF
C_{OUT} = Tantalum 1.0µF

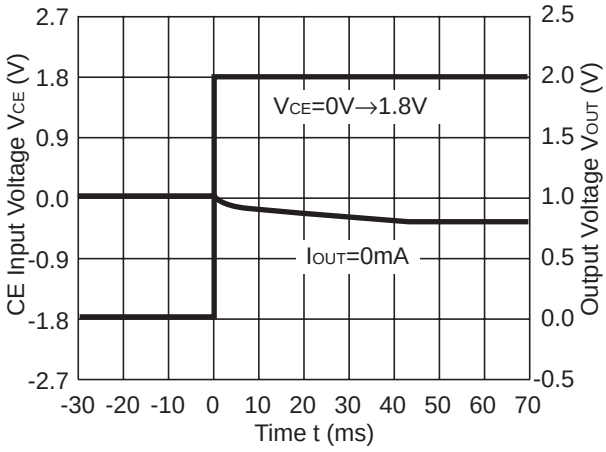

R1161x08xx (ECO=H)

V_{IN}=1.8V, C_{IN} = Tantalum 1.0µF
C_{OUT} = Tantalum 1.0µF

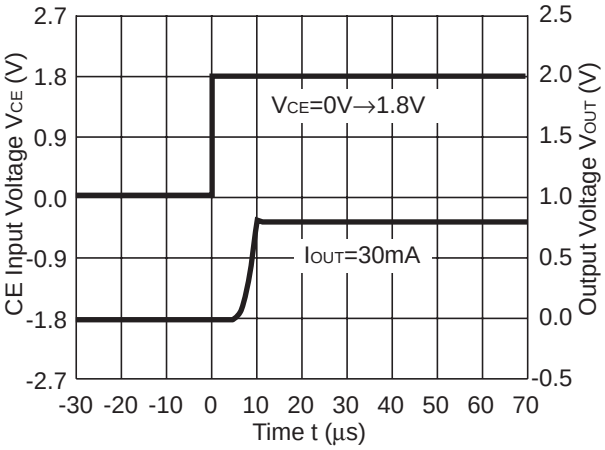

R1161x08xx (ECO=L)

V_{IN}=1.8V, C_{IN} = Tantalum 1.0µF
C_{OUT} = Tantalum 1.0µF

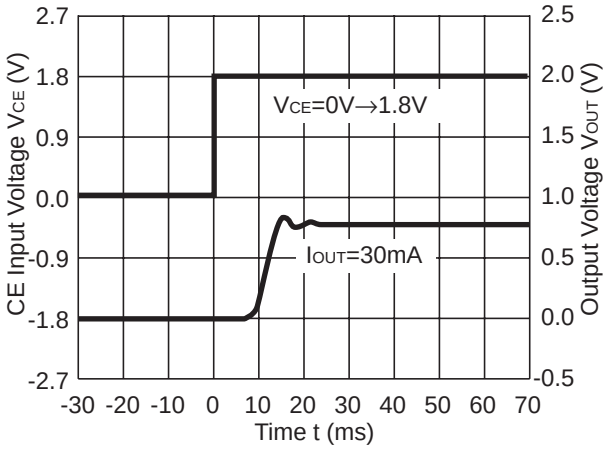

R1161x08xx (ECO=H)

V_{IN}=1.8V, C_{IN} = Tantalum 1.0µF
C_{OUT} = Tantalum 1.0µF

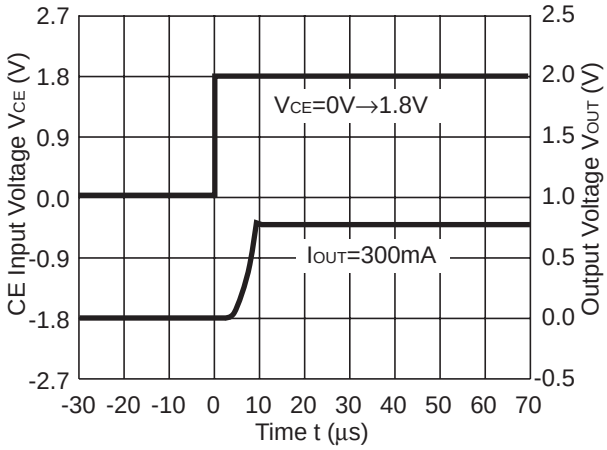

R1161x08xx (ECO=L)

V_{IN}=1.8V, C_{IN} =Tantalum 1.0µF
C_{OUT} = Tantalum 1.0µF

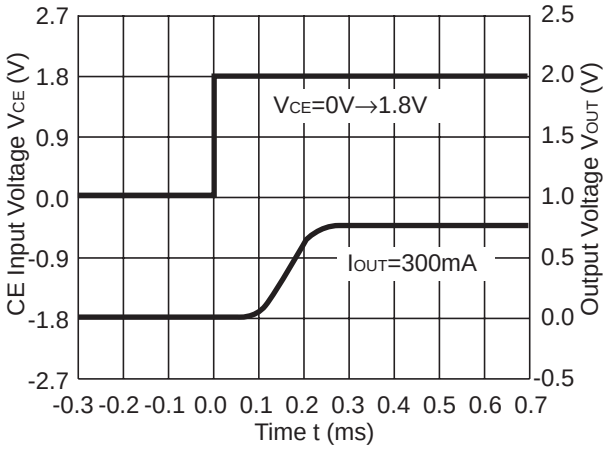

R1161x

R1161x33xx (ECO=H)

V_{IN}=4.3V, C_{IN} = Ceramic 1.0µF
C_{OUT} = Ceramic 1.0µF

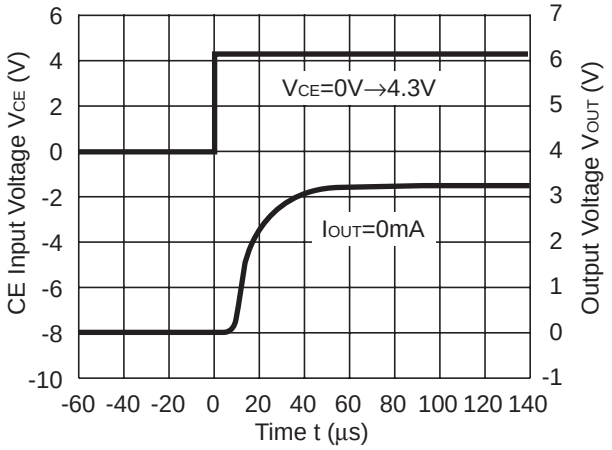

R1161x33xx (ECO=L)

V_{IN}=4.3V, C_{IN} = Ceramic 1.0µF
C_{OUT} = Ceramic 1.0µF

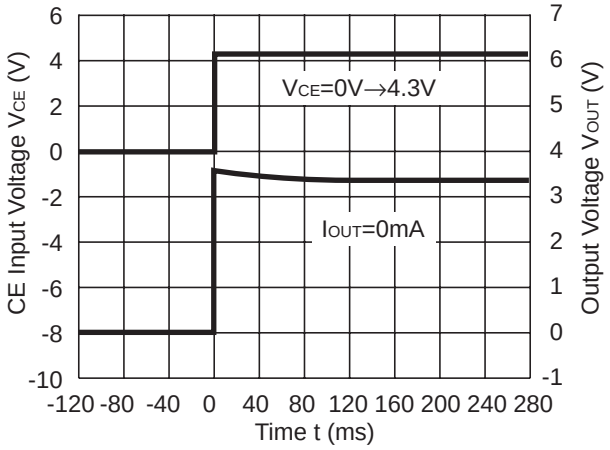

R1161x33xx (ECO=H)

V_{IN}=4.3V, C_{IN} = Ceramic 1.0µF
C_{OUT} = Ceramic 1.0µF

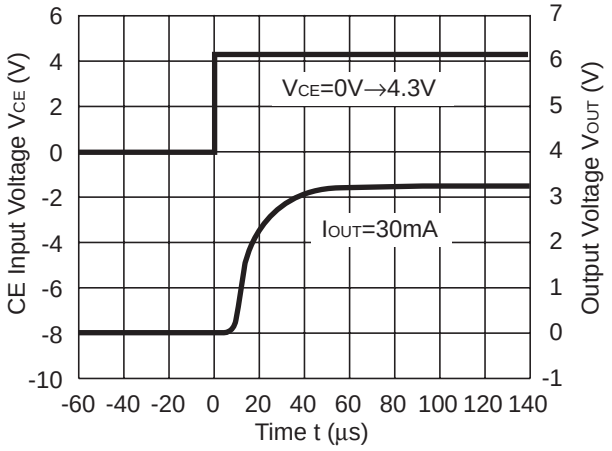

R1161x33xx (ECO=L)

V_{IN}=4.3V, C_{IN} = Ceramic 1.0µF
C_{OUT} = Ceramic 1.0µF

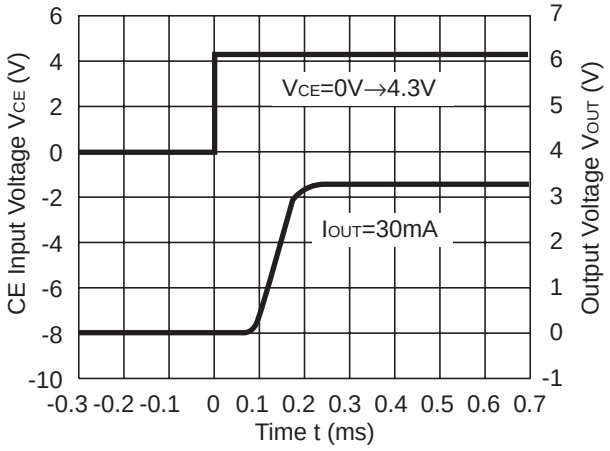

R1161x33xx (ECO=H)

V_{IN}=4.3V, C_{IN} = Ceramic 1.0µF
C_{OUT} = Ceramic 1.0µF

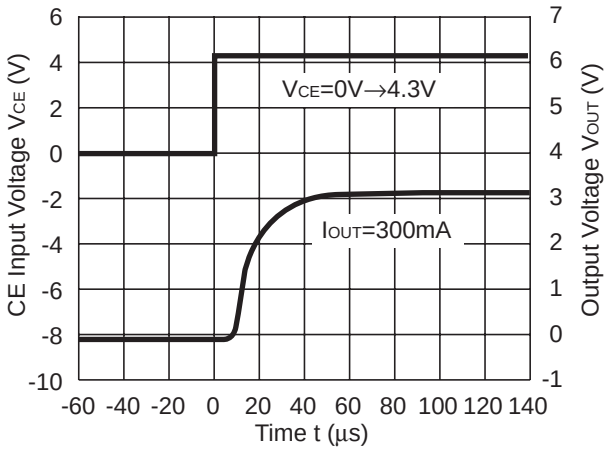

R1161x33xx (ECO=L)

V_{IN}=4.3V, C_{IN} = Ceramic 1.0µF
C_{OUT} = Ceramic 1.0µF

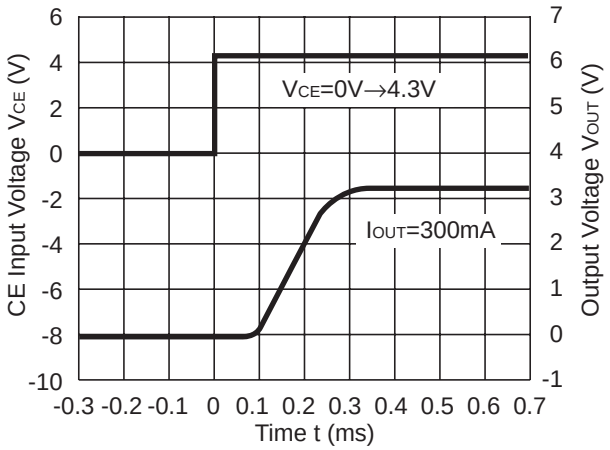

13) Turn-off Speed with CE

R1161x08xD

V_{IN}=1.8V, C_{IN} = Tantalum 1.0µF
C_{OUT} = Tantalum 1.0µF

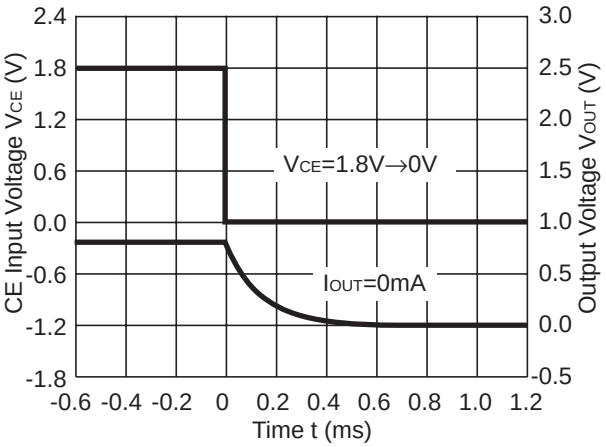

R1161x08xD

V_{IN}=1.8V, C_{IN} = Tantalum 1.0µF
C_{OUT} = Tantalum 1.0µF

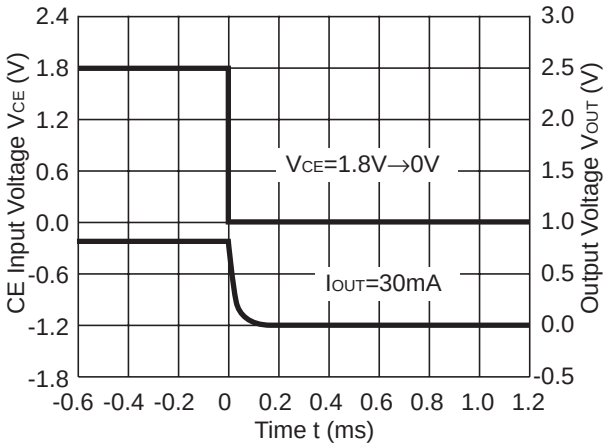

R1161x08xD

V_{IN}=1.8V, C_{IN} = Tantalum 1.0µF
C_{OUT} = Tantalum 1.0µF

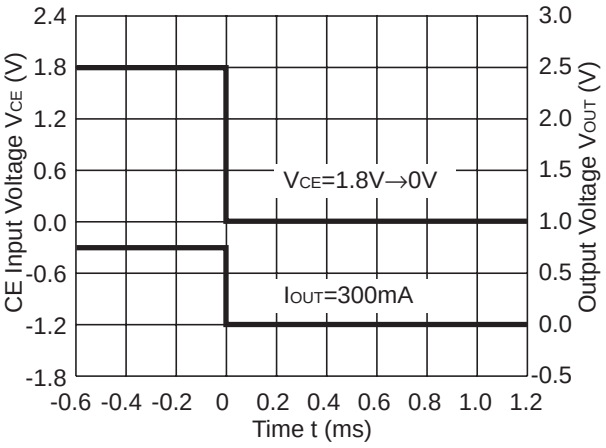

R1161x33xD

V_{IN}=4.3V, C_{IN} = Ceramic 1.0µF
C_{OUT} = Ceramic 1.0µF

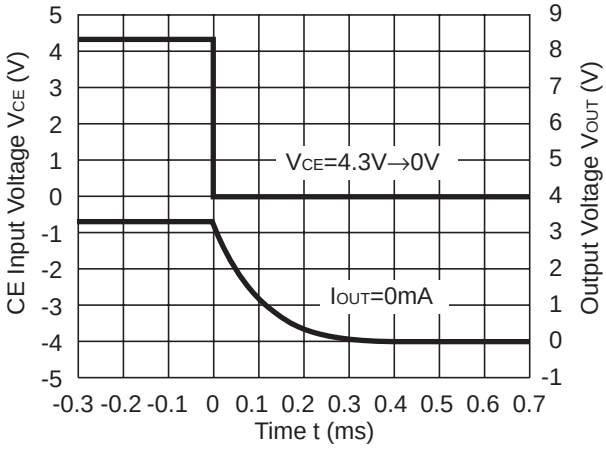

R1161x33xD

V_{IN}=4.3V, C_{IN} = Ceramic 1.0µF
C_{OUT} = Ceramic 1.0µF

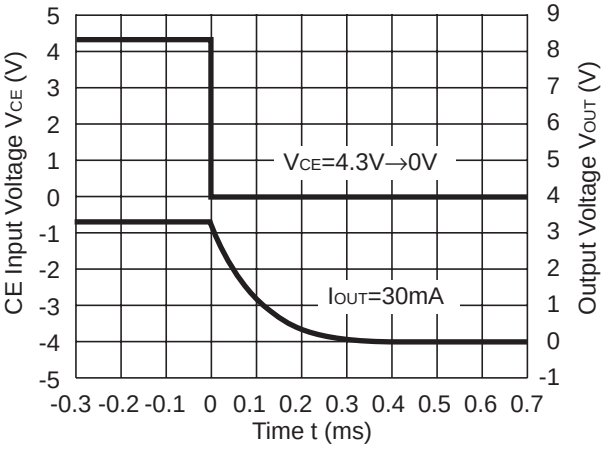

R1161x33xD

V_{IN}=4.3V, C_{IN} = Ceramic 1.0µF
C_{OUT} = Ceramic 1.0µF

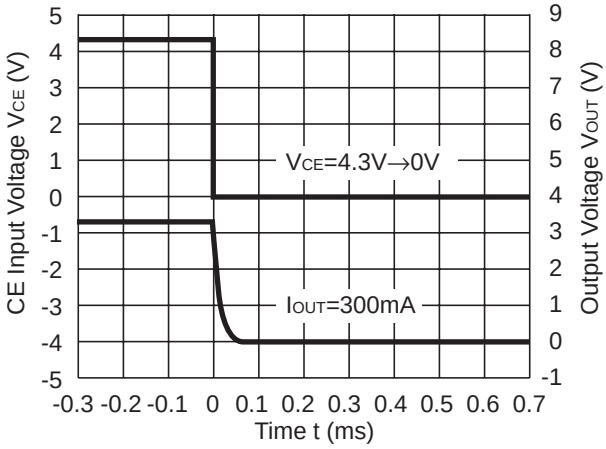

14)Output Voltage at Mode alternative point

R1161x08xx

VIN=1.8V, CIN = Ceramic 1.0µF
COUT = Tantalum 1.0µF

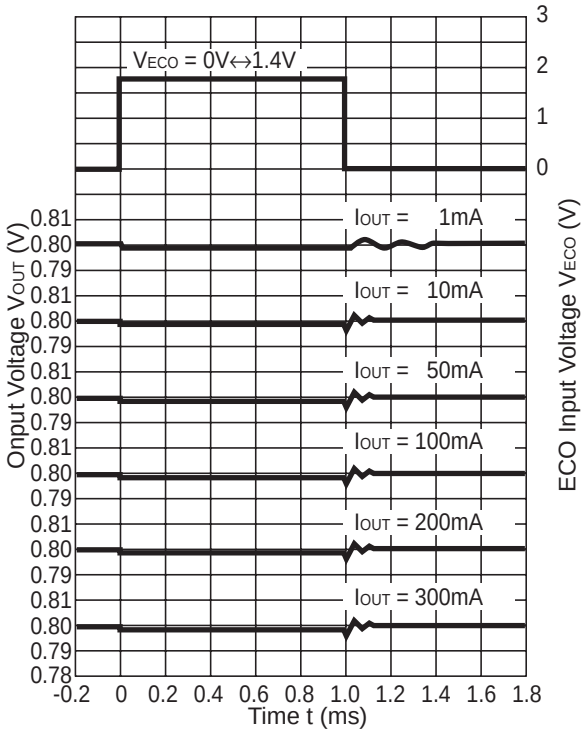

R1161x08xx

VIN=1.8V, CIN = Ceramic 1.0µF
COUT = Tantalum 1.0µF

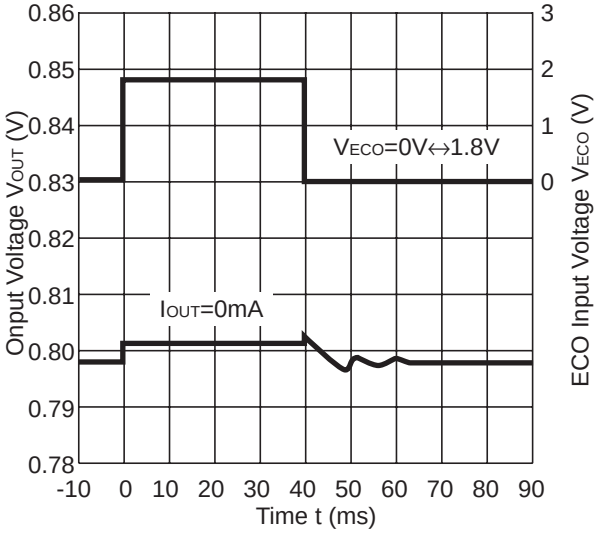

R1161x10xx

VIN=2.0V, CIN = Ceramic 1.0µF
COUT = Ceramic 1.0µF

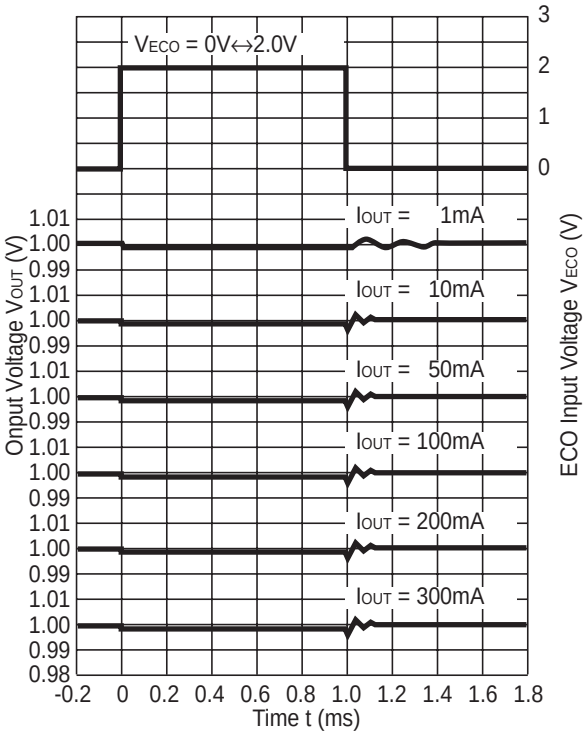

R1161x10xx

VIN=2.0V, CIN = Ceramic 1.0µF
COUT = Ceramic 1.0µF

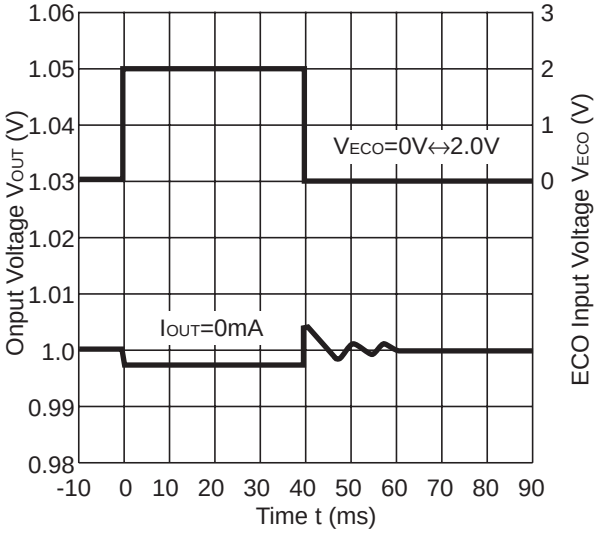

R1161x26xx

V_{IN}=3.6V, C_{IN} = Ceramic 1.0µF
C_{OUT} = Ceramic 1.0µF

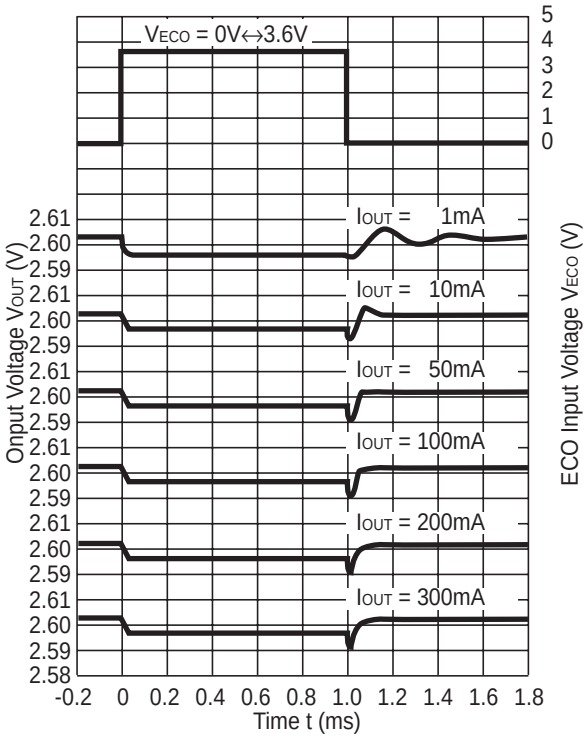

R1161x26xx

V_{IN}=3.6V, C_{IN} = Ceramic 1.0µF
C_{OUT} = Ceramic 1.0µF

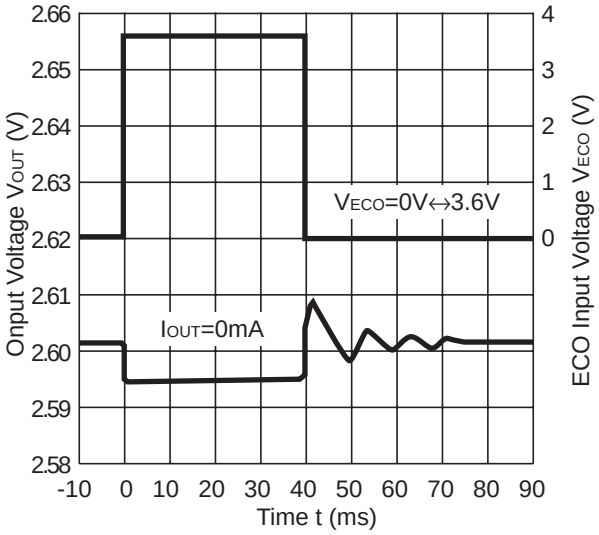

TECHNICAL NOTES

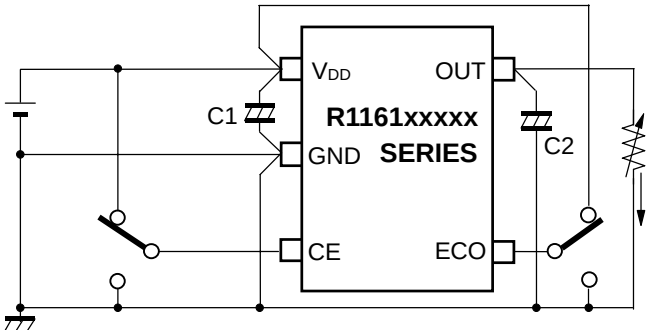

When using these ICs, consider the following points:

1.Mounting on PCB

Make V_{DD} and GND lines sufficient. If their impedance is high, noise pickup or unstable operation may result. Connect a capacitor C1 with as much as 1.0μF capacitor between V_{DD} and GND pin as close as possible.

Set external components, especially the output capacitor as close as possible to the ICs and make wiring as short as possible.

2.Phase Compensation

In these ICs, phase compensation is made for securing stable operation even if the load current is varied. For this purpose, be sure to use a 1.0μF more capacitor C2 with good frequency characteristics and ESR (Equivalent Series Resistance).

Output Voltage	Recommended Value of C2
V_{OUT}<1.0V	1.0μF or more Tantalum Capacitor
1.0V ≦ V_{OUT}	1.0μF or more Ceramic Capacitor

(Note: When the additional ceramic capacitors are connected to the Output Pin with Output capacitor for phase compensation, the operation might be unstable. Because of this, test these ICs with as same external components as ones to be used on the PCB.)

> If you use a tantalum type capacitor and ESR value of the capacitor is large, output might be unstable. Evaluate your circuit with considering frequency characteristics.
> Depending on the capacitor size, manufacturer, and part number, the bias characteristics and temperature characteristics are different. Evaluate the circuit with actual using capacitors.

ESR vs. Output Current

When using these ICs, consider the following points:

In these ICs, phase compensation is made for securing stable operation even if the output current is varied. For this purpose, be sure to use a capacitor C_{OUT} with good frequency characteristics and ESR (Equivalent Series Resistance) in the range described as follows:

The relations between I_{OUT} (Output Current) and ESR of Output Capacitor are shown below.
The conditions when the white noise level is under 40μV (Avg.) are marked as the hatched area in the graph.

<Test conditions>

(1) Frequency band: 10Hz to 2MHz
(2) Temperature: 25°C

R1161x08xx (ECO=H)

V_{IN}=1.4V to 6.0V,
C_{IN} = Ceramic 1.0μF C_{OUT} = Ceramic 1.0μF

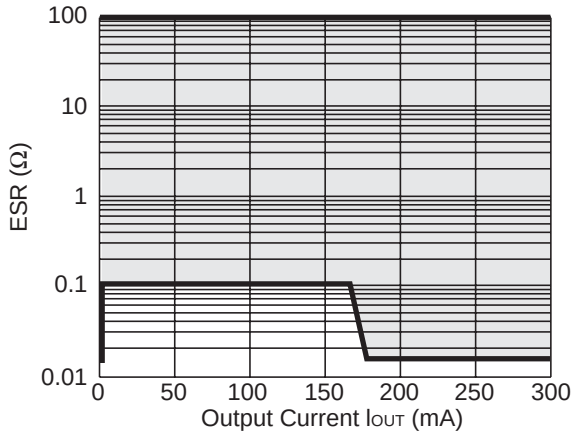

R1161x08xx (ECO=L)

V_{IN}=1.4V to 6.0V,
C_{IN} = Ceramic 1.0μF C_{OUT} = Ceramic 1.0μF

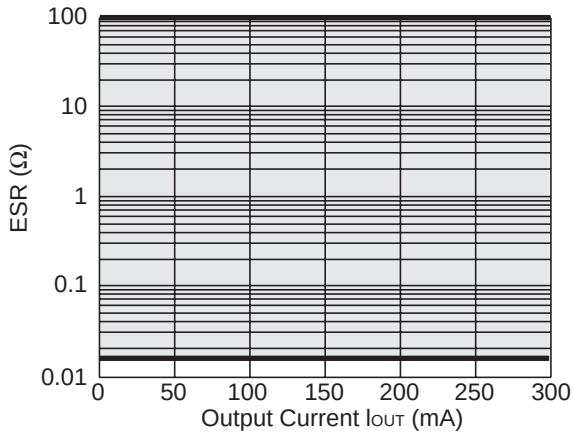

R1161x10xx (ECO=H)

V_{IN}=1.4V to 6.0V,
C_{IN} = Ceramic 1.0μF C_{OUT} = Ceramic 1.0μF

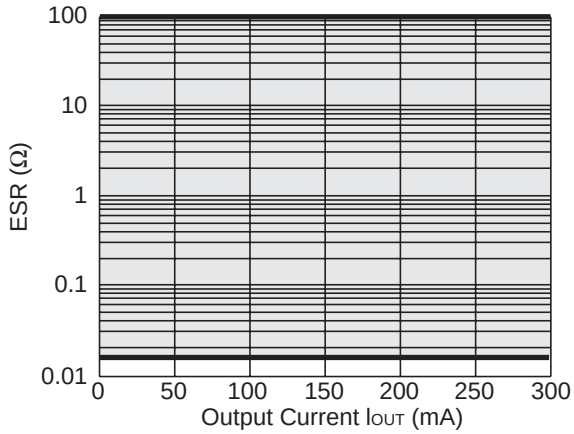

R1161x10xx (ECO=L)

V_{IN}=1.4V to 6.0V,
C_{IN} = Ceramic 1.0μF C_{OUT} = Ceramic 1.0μF

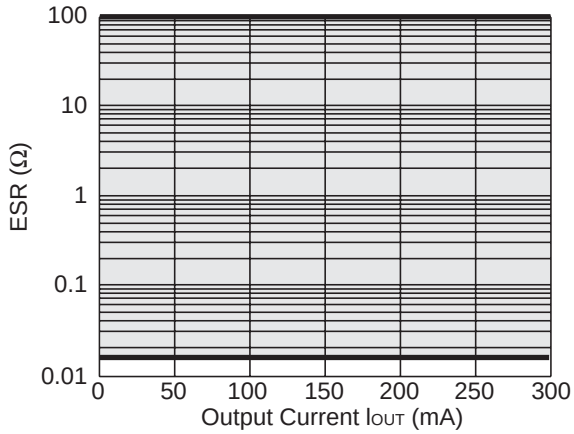

R1161x

R1161x26xx (ECO=H)

V_{IN}=3.0V to 6.0V,
C_{IN} = Ceramic 1.0µF C_{OUT} = Ceramic 1.0µF

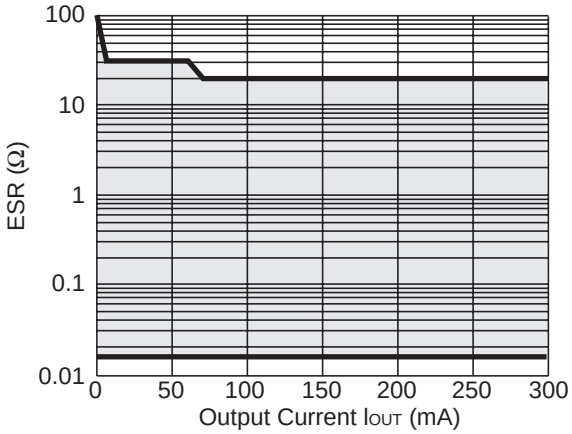

R1161x26xx (ECO=L)

V_{IN}=3.0V to 6.0V,
C_{IN} = Ceramic 1.0µF C_{OUT} = Ceramic 1.0µF

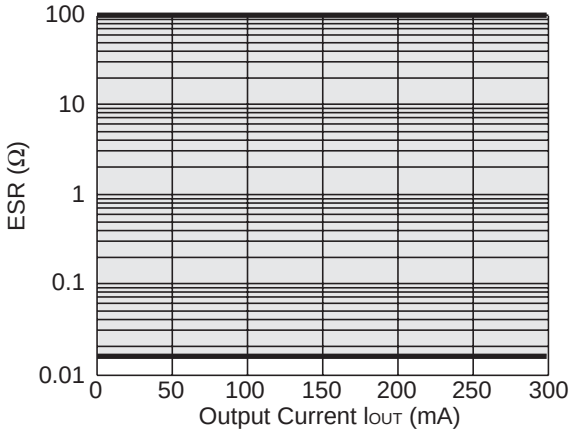

R1161x15xx (ECO=H)

V_{IN}=2.0V to 6.0V,
C_{IN} = Ceramic 1.0µF C_{OUT} = Ceramic 1.0µF

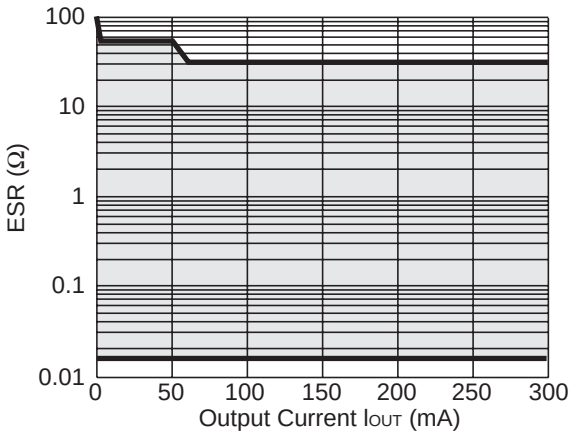

R1161x30xx (ECO=H)

V_{IN}=3.6V to 6.0V,
C_{IN} = Ceramic 1.0µF C_{OUT} = Ceramic 1.0µF

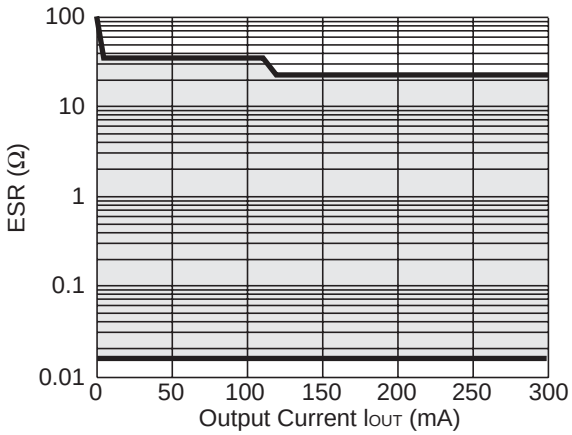

1. The products and the product specifications described in this document are subject to change or discontinuation of production without notice for reasons such as improvement. Therefore, before deciding to use the products, please refer to our sales representatives for the latest information thereon.
2. The materials in this document may not be copied or otherwise reproduced in whole or in part without prior written consent of our company.
3. Please be sure to take any necessary formalities under relevant laws or regulations before exporting or otherwise taking out of your country the products or the technical information described herein.
4. The technical information described in this document shows typical characteristics of and example application circuits for the products. The release of such information is not to be construed as a warranty of or a grant of license under our company's or any third party's intellectual property rights or any other rights.
5. The products listed in this document are intended and designed for use as general electronic components in standard applications (office equipment, telecommunication equipment, measuring instruments, consumer electronic products, amusement equipment etc.). Those customers intending to use a product in an application requiring extreme quality and reliability, for example, in a highly specific application where the failure or misoperation of the product could result in human injury or death (aircraft, spacevehicle, nuclear reactor control system, traffic control system, automotive and transportation equipment, combustion equipment, safety devices, life support system etc.) should first contact us.
6. We are making our continuous effort to improve the quality and reliability of our products, but semiconductor products are likely to fail with certain probability. In order to prevent any injury to persons or damages to property resulting from such failure, customers should be careful enough to incorporate safety measures in their design, such as redundancy feature, fire containment feature and fail-safe feature. We do not assume any liability or responsibility for any loss or damage arising from misuse or inappropriate use of the products.
7. Anti-radiation design is not implemented in the products described in this document.
8. The X-ray exposure can influence functions and characteristics of the products. Confirm the product functions and characteristics in the evaluation stage.
9. WLCSP products should be used in light shielded environments. The light exposure can influence functions and characteristics of the products under operation or storage.
10. There can be variation in the marking when different AOI (Automated Optical Inspection) equipment is used. In the case of recognizing the marking characteristic with AOI, please contact our sales or our distributor before attempting to use AOI.
11. Please contact our sales representatives should you have any questions or comments concerning the products or the technical information.

NISSHINBO

Nisshinbo Micro Devices Inc.

Official website
https://www.nisshinbo-microdevices.co.jp/en/
Purchase information
https://www.nisshinbo-microdevices.co.jp/en/buy/

ENTEGRECİ

Bu belge www.entegreci.com üzerinden sunulmaktadır.

Elektronik komponent tedarikinde Entegreci

Entegreci, Eskişehir merkezli, Türkiye geneline satış yapan bir elektronik komponent mağazasıdır. Entegreler (IC), mikrodenetleyiciler, transistörler, diyotlar, pasif elemanlar, konnektörler, modüller ve geliştirme kartları tek adetten seri üretim adetlerine kadar satılır. Ürün sayfalarında güncel stok durumunu, fiyatı ve datasheet bağlantısını bulabilirsiniz.

Parça koduyla arama

Üretici parça numarasını yazın; stok ve fiyatı hemen görün.

www.entegreci.com

Ürün kategorileri

Entegreden kapasitöre tüm elektronik komponent kategorileri.

Kategorilere göz atın

Üreticiler

Aradığınız üreticinin ürünlerini tek sayfada inceleyin.

Üreticileri görün

Toplu alım ve teklif

Listede olmayan ya da yüksek adetli parçalar için teklif isteyin.

Teklif isteyin

www.entegreci.com | **destek@entegreci.com** | **0850 305 90 34**

Entegreci is an online electronic components store based in Türkiye. Search by manufacturer part number to see stock, prices and datasheets for integrated circuits, microcontrollers, transistors, passive components and connectors, or request a quote for parts that are not listed.

Bu sayfa Entegreci tarafından eklenmiştir. Belgenin önceki sayfaları asıl yayıncısına aittir ve içeriği değiştirilmemiştir; en güncel sürüm için belgenin yayıncısına başvurun.