NISSHINBO

R1163x SERIES

3-MODE 150mA LDO REGULATOR with the Reverse Current Protection

NO.EA-118-230417

OUTLINE

The R1163x Series consist of CMOS-based voltage regulator ICs with high output voltage accuracy and low supply current. These ICs perform with the chip enable function and realize a standby mode with ultra low supply current. To prevent the destruction by over current, the current limit circuit is included. The R1163x Series have 3-mode. One is standby mode with CE or standby control pin. Other two modes are realized with ECO pin. Fast Transient Mode (FT mode) and Low Power Mode (LP mode) are alternative with ECO pin. Consumption current is reduced at Low Power Mode compared with Fast Transient Mode. The output voltage is maintained between FT mode and LP mode.

Further, the reverse current protection circuit is built-in. Therefore, if a higher voltage than V_{DD} pin is forced to the output pin, the reverse current to V_{DD} pin is very small (Max. 0.1µA) , so it is suitable for backup circuit.

Since the packages for these ICs are SOT-23-5, SON-6, and DFN(PL)1616-6 packages, high density mounting of the ICs on boards is possible.

FEATURES

- Supply Current ..... Typ. 6.0µA (Low Power Mode),
  Typ. 70µA (Fast Transient Mode)
- Standby Mode ..... Typ. 0.6µA
- Reverse Current ..... Max. 0.1µA
- Input Voltage Range ..... 2.0V to 6.0V
- Output Voltage Range ..... 1.5V to 5.0V (0.1V steps)
  (For other voltages, please refer to MARK INFORMATIONS.)
- Output Voltage Accuracy ..... ±1.5% (±2.5% at Low Power Mode)
- Temperature-Drift Coefficient of Output Voltage .. Typ. ±100ppm/°C
- Dropout Voltage ..... Typ. 0.25V (I_{OUT}=150mA, V_{OUT}=2.8V)
- Ripple Rejection ..... Typ. 70dB (f=1kHz, Fast Transient Mode)
- Line Regulation ..... Typ. 0.02%/V (Fast Transient Mode)
- Packages ..... DFN(PL)1616-6, SOT-23-5, SON-6
- Built-in fold-back protection circuit ..... Typ. 40mA (Current at short mode)
- Performs with Ceramic Capacitors ..... C_{IN}=Ceramic 1.0µF, C_{OUT}=Ceramic 0.47µF

APPLICATIONS

- Precision Voltage References.
- Power source for electrical appliances such as cameras, VCRs and hand-held communication equipment.
- Power source for battery-powered equipment.

BLOCK DIAGRAM

R1163xxx1B

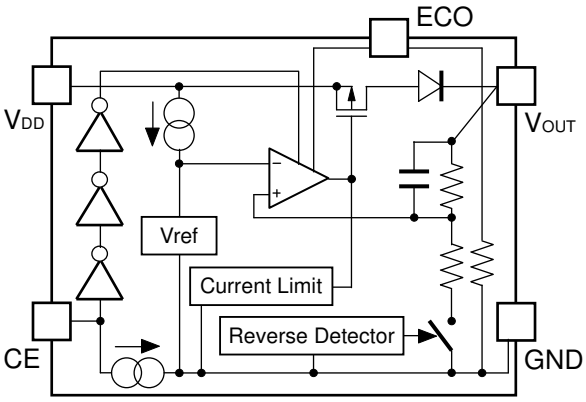

R1163xxx1D

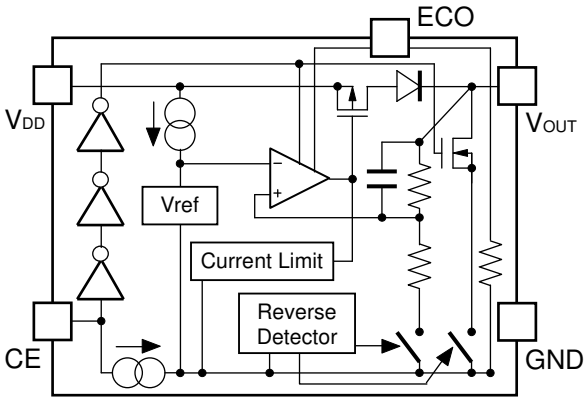

R1163xxx1E

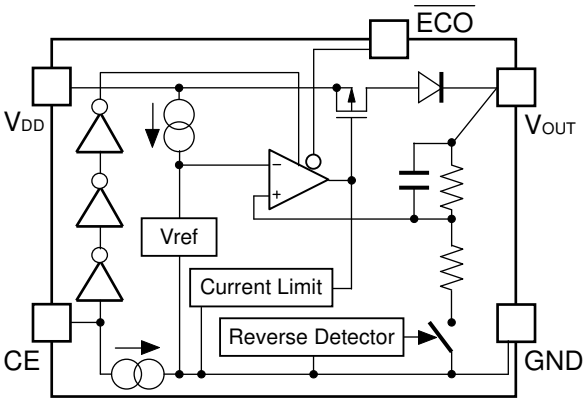

SELECTION GUIDE

The output voltage, auto discharge function, and package, etc. for the ICs can be selected at the user's request.

Product Name	Package	Quantity per Reel	Pb Free	Halogen Free
R1163Kxx1∗-TR	DFN(PL)1616-6	5,000 pcs	Yes	Yes
R1163Nxx1∗-TR-FE	SOT-23-5	3,000 pcs	Yes	Yes
R1163Dxx1∗-TR-FE	SON-6	3,000 pcs	Yes	Yes

xx: The output voltage can be designated in the range from 1.5V(15) to 5.0V(50) in 0.1V steps.
(For other voltages, please refer to MARK INFORMATIONS.)

∗ : The auto discharge function at off state are options as follows.
(B) without auto discharge function at off state
(D) with auto discharge function at off state
(E) without auto discharge function at off state, ECO logic reverse type (Low Power mode at ECO="H")

PIN CONFIGURATIONS

- **DFN(PL)1616-6**

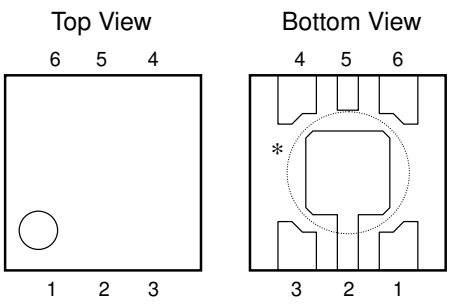

- **SOT-23-5**

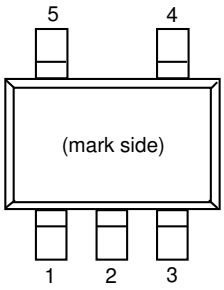

- **SON-6**

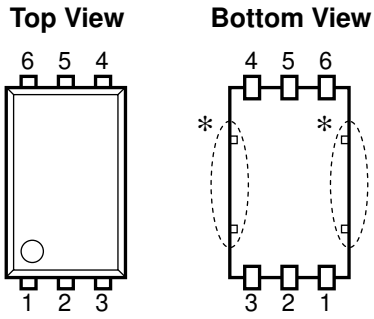

PIN DISCRIPTIONS

- **DFN(PL)1616-6**

Pin No	Symbol	Pin Description
1	V_{OUT}	Output pin
2	GND	Ground Pin
3	ECO	R1163xxx1B/D: FT/LP Mode Alternative Pin (“L” LP)
	$\overline{ECO}$	R1163xxx1E: FT/LP Mode Alternative Pin (“H” LP)
4	CE	Chip Enable pin ("H" Active)
5	NC	No Connection
6	V_{DD}	Input Pin

∗) Tab is GND level. (They are connected to the reverse side of this IC.)
The tab is better to be connected to the GND, but leaving it open is also acceptable.

- **SOT-23-5**

Pin No	Symbol	Pin Description
1	V_{DD}	Input Pin
2	GND	Ground Pin
3	CE	Chip Enable Pin ("H" Active)
4	ECO	R1163xxx1B/D: FT/LP Mode Alternative Pin (“L” LP)
	$\overline{ECO}$	R1163xxx1E: FT/LP Mode Alternative Pin (“H” LP)
5	V_{OUT}	Output pin

- **SON-6**

Pin No	Symbol	Pin Description
1	V_{DD}	Input Pin
2	NC	No Connection
3	V_{OUT}	Output pin
4	ECO	R1163xxx1B/D: FT/LP Mode Alternative Pin (“L” LP)
	$\overline{ECO}$	R1163xxx1E: FT/LP Mode Alternative Pin (“H” LP)
5	GND	Ground Pin
6	CE	Chip Enable Pin ("H" Active)

*) Tab suspension leads are GND level. (They are connected to the reverse side of this IC.)
The tab suspension leads should be open and do not connect to other wires or land patterns.

ABSOLUTE MAXIMUM RATINGS

Symbol	Item	Rating	Unit
V_{IN}	Input Voltage	6.5	V
V_{ECO}	Input Voltage (ECO/$\overline{ECO}$ Pin)	–0.3 ~ 6.5	V
V_{CE}	Input Voltage (CE Pin)	–0.3 ~ 6.5	V
V_{OUT}	Output Voltage	–0.3 ~ 6.5	V
I_{OUT}	Output Current	180	mA
P_D	Power Dissipation (DFN(PL)1616-6)*	640	mW
	Power Dissipation (SOT-23-5) *	420	
	Power Dissipation (SON-6) *	500	
Topt	Operating Temperature Range	–40 ~ 85	°C
Tstg	Storage Temperature Range	–55 ~ 125	°C

∗) For Power Dissipation, please refer to PACKAGE INFORMATION.

ABSOLUTE MAXIMUM RATINGS

Electronic and mechanical stress momentarily exceeded absolute maximum ratings may cause the permanent damages and may degrade the life time and safety for both device and system using the device in the field.
The functional operation at or over these absolute maximum ratings is not assured.

RECOMMENDED OPERATING CONDITIONS (ELECTRICAL CHARACTERISTICS)

All of electronic equipment should be designed that the mounted semiconductor devices operate within the recommended operating conditions. The semiconductor devices cannot operate normally over the recommended operating conditions, even if when they are used over such conditions by momentary electronic noise or surge. And the semiconductor devices may receive serious damage when they continue to operate over the recommended operating conditions.

ELECTRICAL CHARACTERISTICS

R1163xxx1B/D

Topt=25°C

Symbol	Item		Conditions		Min.	Typ.	Max.	Unit
V_{OUT}	Output Voltage	FT Mode	V_{IN}=Set V_{OUT}+1V, V_{ECO}=V_{IN} 1mA ≦ I_{OUT} ≦ 30mA		×0.985		×1.015	V
		LP Mode	V_{IN}=Set V_{OUT} + 1V, V_{ECO}=GND 1mA ≦ I_{OUT} ≦ 30mA		×0.975		×1.025	
ΔV_{OUT}	Output Voltage Deviation between FT Mode and LP Mode		V_{IN}=Set V_{OUT}+1V, I_{OUT}=30mA	V_{OUT} > 2.0V	−1.2	0	1.2	%
				V_{OUT} ≦ 2.0V	−24	0	24	mV
I_{OUT}	Output Current		V_{IN}−V_{OUT}=1.0V		150			mA
ΔV_{OUT}/ ΔI_{OUT}	Load Regulation	FT Mode	V_{IN}=Set V_{OUT}+1V, V_{ECO}=V_{IN} 1mA ≦ I_{OUT} ≦ 150mA			20	40	mV
		LP Mode	V_{IN}=Set V_{OUT}+1V, V_{ECO}=GND 1mA ≦ I_{OUT} ≦ 150mA			20	45	
V_{DIF}	Dropout Voltage		Refer to the following table					
I_{SS1}	Supply Current (FT Mode)		V_{IN}=Set V_{OUT}+1V V_{ECO}=V_{IN}			70	100	µA
I_{SS2}	Supply Current (LP Mode)		V_{IN}=Set V_{OUT}+1V V_{ECO}=GND			6.0	10.0	µA
$I_{standby}$	Supply Current (Standby)		V_{IN}=Set V_{OUT}+1V, V_{CE}=GND V_{ECO}=GND or V_{IN}			0.6	1.0	µA
ΔV_{OUT}/ ΔV_{IN}	Line Regulation	FT Mode	Set V_{OUT}+0.5V ≦ V_{IN} ≦ 6.0V I_{OUT}=30mA, V_{ECO}=V_{IN} If V_{OUT} ≦ 1.6V, then 2.2V ≦ V_{IN} ≦ 6.0V			0.02	0.10	%/V
		LP Mode	Set V_{OUT} + 0.5V ≦ V_{IN} ≦ 6.0V I_{OUT} =30mA, V_{ECO}=GND If V_{OUT} ≦ 1.6V, then 2.2V ≦ V_{IN} ≦ 6.0V			0.05	0.20	
RR	Ripple Rejection (FT Mode)		Ripple 0.2Vp-p, V_{IN}=Set V_{OUT}+1V, I_{OUT}=30mA, V_{ECO}=V_{IN} If V_{OUT} ≦ 1.7V, then V_{IN}=Set V_{OUT}+1.2V	f=1kHz		70		dB
				f=10kHz		60		
V_{IN}	Input Voltage				2.0		6.0	V
ΔV_{OUT}/ $\Delta Topt$	Output Voltage Temperature Coefficient		I_{OUT}=30mA −40°C ≦ Topt ≦ 85°C			±100		ppm /°C
I_{SC}	Short Current Limit		V_{OUT}=0V			40		mA
I_{PD}	CE Pull-down Current					0.3	0.6	µA
R_{PDE}	ECO Pull-down Resistance				2	5	30	MΩ
V_{CEH}	CE, ECO Input Voltage "H"				1.0		6.0	V
V_{CEL}	CE, ECO Input Voltage "L"				0		0.35	V
en	Output Noise "H" (FT Mode)		BW=10Hz to 100kHz			30		µVrms
	Output Noise "L" (LP Mode)		BW=10Hz to 100kHz			40		
R_{LOW}	Low Output Nch Tr. ON Resistance (of D version)		V_{CE}=0V			60		Ω
I_{REV}	Reverse Current		V_{OUT}>0.5V, 0V ≦ V_{IN} ≦ 6V			0	0.1	µA

R1163xxx1E

Topt=25°C

Symbol	Item		Conditions		Min.	Typ.	Max.	Unit
V_{OUT}	Output Voltage	FT Mode	V_{IN}=Set V_{OUT}+1V, V_{ECO}=GND 1mA ≦ I_{OUT} ≦ 30mA		×0.985		×1.015	V
		LP Mode	V_{IN}=Set V_{OUT}+1V, V_{ECO}=V_{IN} 1mA ≦ I_{OUT} ≦ 30mA		×0.975		×1.025	
ΔV_{OUT}	Output Voltage Deviation between FT Mode and LP Mode		V_{IN}=Set V_{OUT}+1V, I_{OUT}=30mA	V_{OUT} > 2.0V	−1.2	0	1.2	%
				V_{OUT} ≦ 2.0V	−24	0	24	mV
I_{OUT}	Output Current		V_{IN}−V_{OUT}=1.0V		150			mA
ΔV_{OUT}/ ΔI_{OUT}	Load Regulation	FT Mode	V_{IN}=Set V_{OUT}+1V, V_{ECO}=GND 1mA ≦ I_{OUT} ≦ 150mA			20	40	mV
		LP Mode	V_{IN}=Set V_{OUT}+1V, V_{ECO}=V_{IN} 1mA ≦ I_{OUT} ≦ 150mA			20	45	
V_{DIF}	Dropout Voltage		Refer to the following table					
I_{SS1}	Supply Current (FT Mode)		V_{IN}=Set V_{OUT}+1V V_{ECO}=GND			70	100	µA
I_{SS2}	Supply Current (LP Mode)		V_{IN}=Set V_{OUT}+1V V_{ECO}=V_{IN}			6.0	10.0	µA
$I_{standby}$	Supply Current (Standby)		V_{IN}=Set V_{OUT}+1V, V_{CE}=GND V_{ECO}=GND or V_{IN}			0.6	1.0	µA
ΔV_{OUT}/ ΔV_{IN}	Line Regulation	FT Mode	Set V_{OUT}+0.5V ≦ V_{IN} ≦ 6.0V I_{OUT}=30mA, V_{ECO}=GND If V_{OUT} ≦ 1.6V, then 2.2V ≦ V_{IN} ≦ 6.0V			0.02	0.10	%/V
		LP Mode	Set V_{OUT}+ 0.5V ≦ V_{IN} ≦ 6.0V I_{OUT}=30mA, V_{ECO}=V_{IN} If V_{OUT} ≦ 1.6V, then 2.2V ≦ V_{IN} ≦ 6.0V			0.05	0.20	
RR	Ripple Rejection (FT Mode)		Ripple 0.2V_{p-p} V_{IN}=Set V_{OUT}+1V, I_{OUT}=30mA, V_{ECO}=GND If V_{OUT} ≦ 1.7V, then V_{IN}=Set V_{OUT}+1.2V	f = 1kHz		70		dB
				f = 10kHz		60		
V_{IN}	Input Voltage				2.0		6.0	V
ΔV_{OUT}/ $\Delta Topt$	Output Voltage Temperature Coefficient		I_{OUT} = 30mA −40°C ≦ Topt ≦ 85°C			±100		ppm /°C
I_{SC}	Short Current Limit		V_{OUT} = 0V			40		mA
I_{PD}	CE Pull-down Current					0.3	0.6	µA
V_{CEH}	CE, $\overline{ECO}$ Input Voltage "H"				1.0		6.0	V
V_{CEL}	CE, $\overline{ECO}$ Input Voltage "L"				0		0.4	V
en	Output Noise "H" (FT Mode)		BW = 10Hz to 100kHz			30		µVrms
	Output Noise "L" (LP Mode)		BW = 10Hz to 100kHz			40		
I_{REV}	Reverse Current		V_{OUT}>0.5V, 0V ≦ V_{IN} ≦ 6V			0	0.1	µA

ELECTRICAL CHARACTERISTICS by OUTPUT VOLTAGE

Topt=25°C

Output Voltage V_{OUT} (V)	Condition	Dropout Voltage (mV)			
		V_{DIF} (FT Mode)		V_{DIF} (LP Mode)	
		Typ.	Max.	Typ.	Max.
1.5 ≦ V_{OUT} < 1.6	I_{OUT}=150mA	400	680	420	680
1.6 ≦ V_{OUT} < 1.7		380	550	390	550
1.7 ≦ V_{OUT} < 1.8		350	520	370	520
1.8 ≦ V_{OUT} < 2.0		340	490	350	490
2.0 ≦ V_{OUT} < 2.8		290	425	300	430
2.8 ≦ V_{OUT} ≦ 5.0		250	350	250	350

TYPICAL APPLICATION

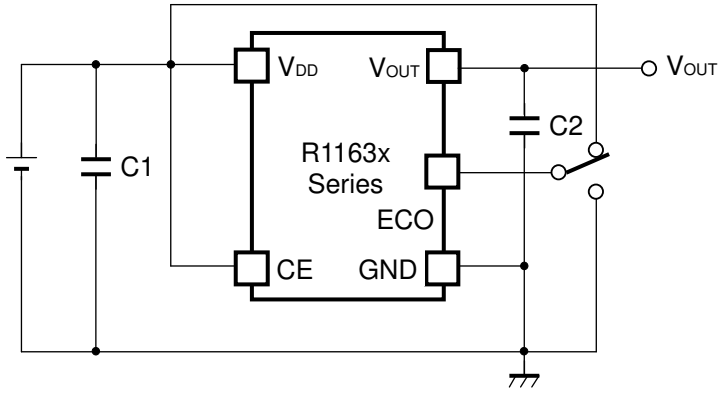

(External Components)
Ex. C1: Ceramic Capacitor 1.0µF
C2: Ceramic Capacitor 0.47µF Murata GRM40B474K
Kyocera CM105B474K

TECHNICAL NOTES

When using these ICs, consider the following points:

Phase Compensation

In these ICs, phase compensation is made for securing stable operation even if the load current is varied. For this purpose, be sure to use a 0.47µF or more ceramic capacitor C2.

(Test these ICs with as same external components as ones to be used on the PCB.)

When a tantalum capacitor is used with this IC, if the equivalent series resistor (ESR) of the capacitor is large, output voltage may be unstable.

PCB Layout

Make V_{DD} and GND lines sufficient. If their impedance is high, noise pickup or unstable operation may result. Connect a capacitor C1 with as much as 1.0µF capacitor between V_{DD} and GND pin as close as possible.

Set external components such as an output capacitor C2, as close as possible to the ICs and make wiring as short as possible.

TEST CIRCUITS

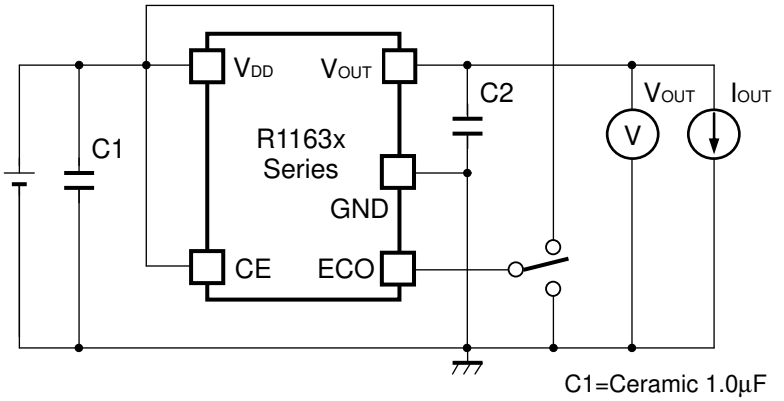

Basic Test Circuit

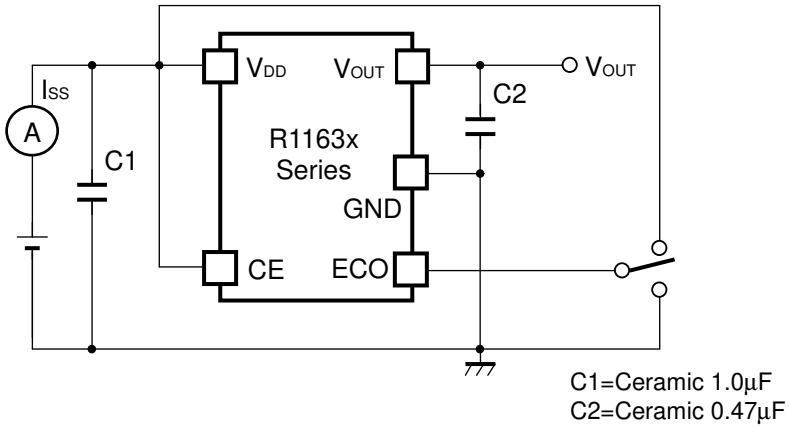

Test Circuit for Supply Current

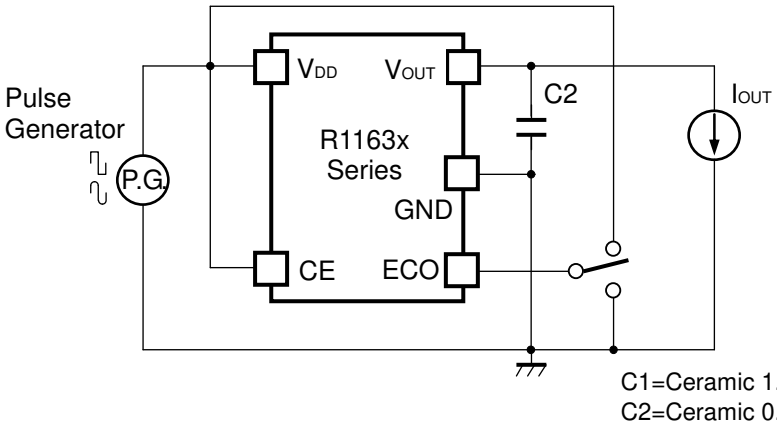

Test Circuit for Ripple Rejection, Line Transient Response

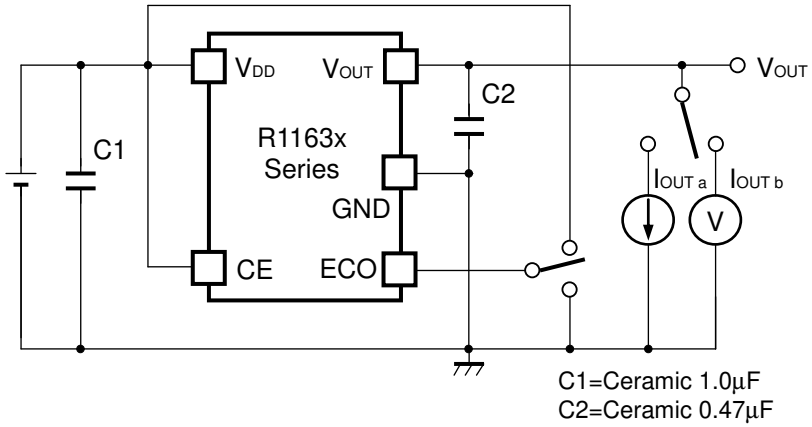

Test Circuit for Load Transient Response

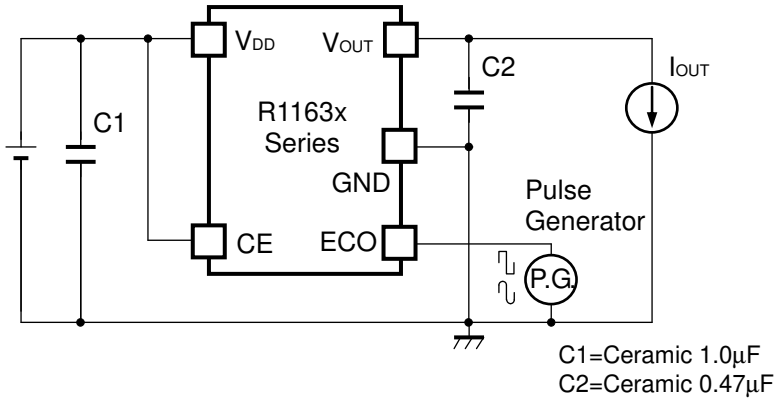

Test Circuit for Output Voltage at Mode alternative point

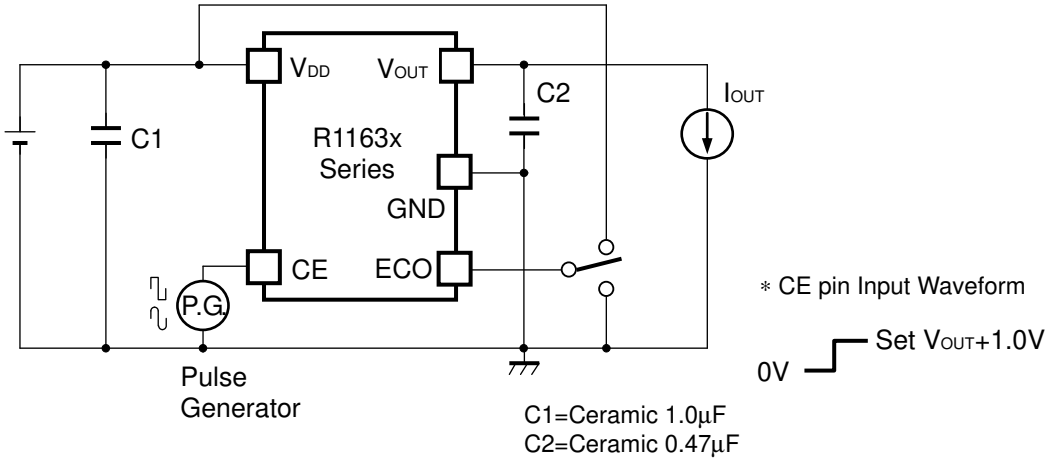

Test Circuit for Turn On Speed with CE pin

TYPICAL CHARACTERISTICS

Unless otherwise provided, capacitors are ceramic type.

1) Output Voltage vs. Output Current

R1163x151x FT Mode

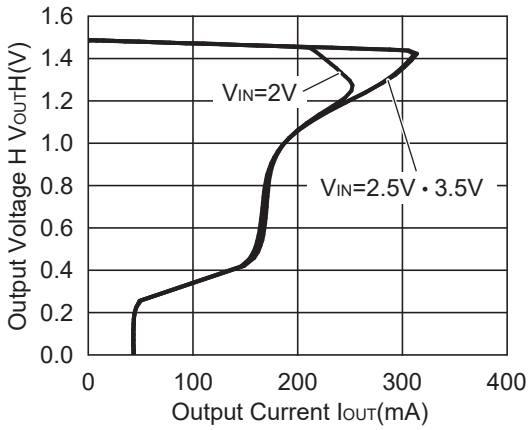

R1163x151x LP Mode

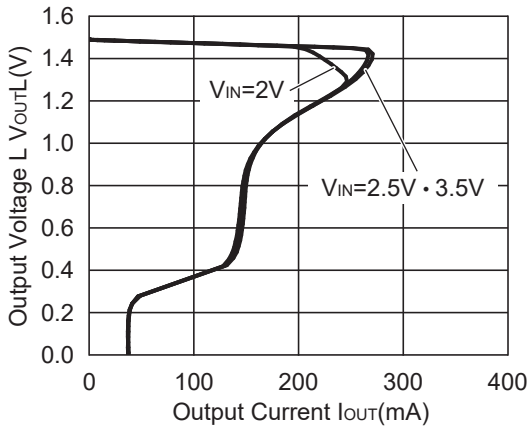

R1163x281x FT Mode

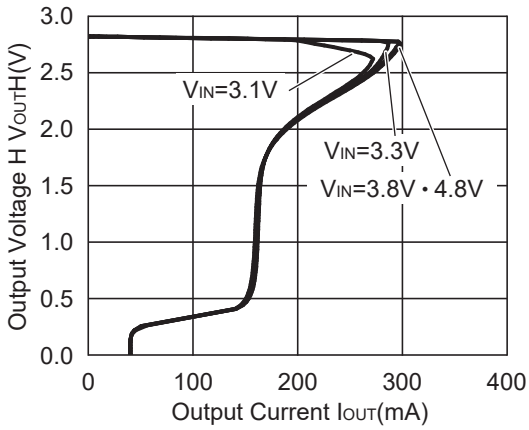

R1163x281x LP Mode

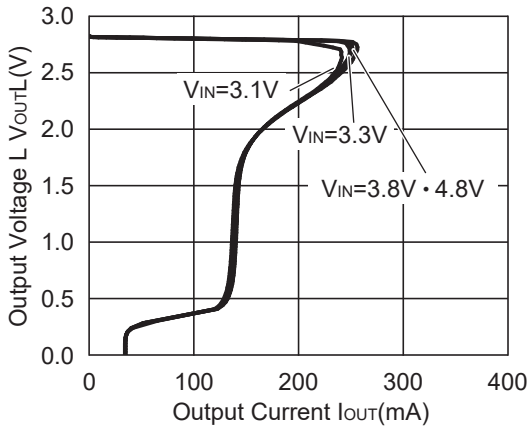

R1163x40x FT Mode

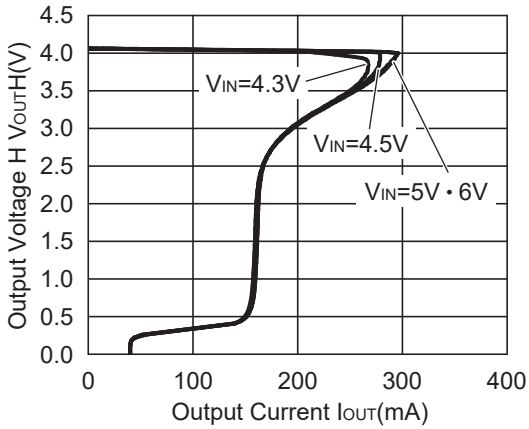

R1163x40x LP Mode

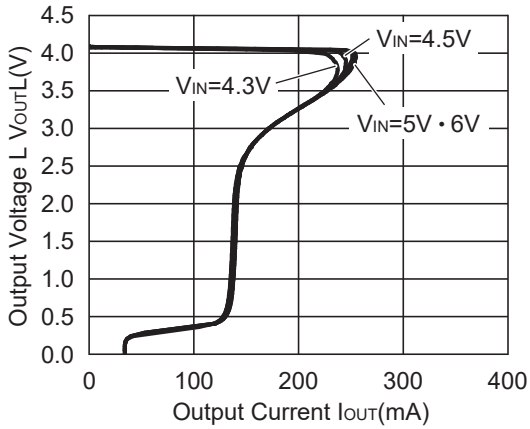

2) Output Voltage vs. Input Voltage

R1163x151x FT Mode

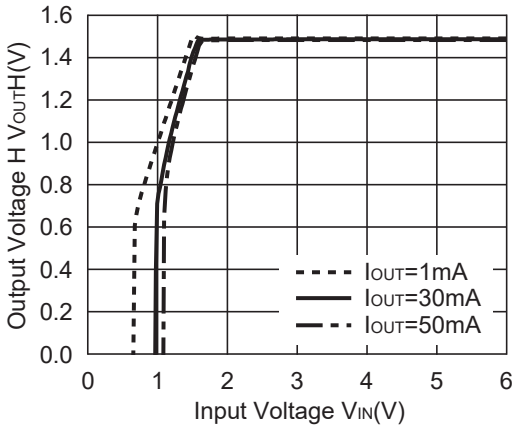

R1163x15x LP Mode

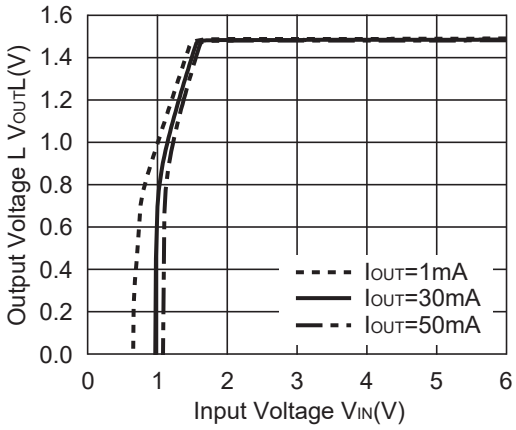

R1163x28x FT Mode

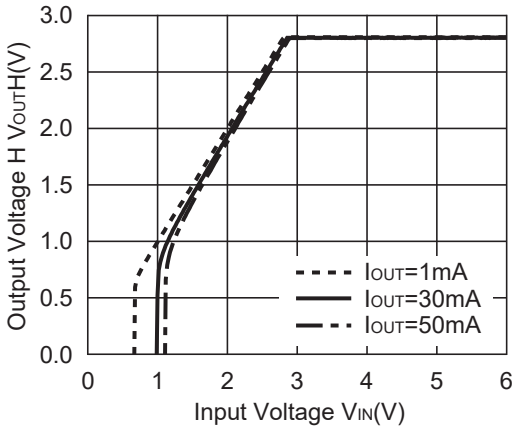

R1163x28x LP Mode

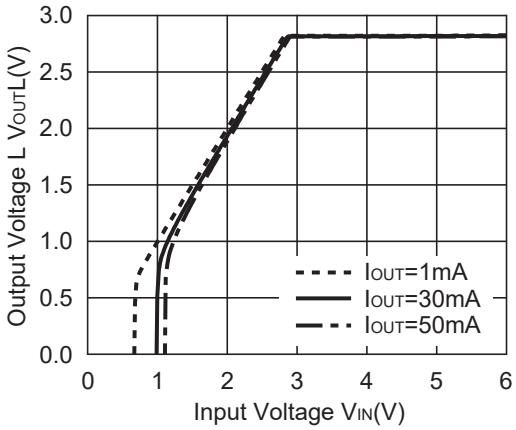

R1163x40x FT Mode

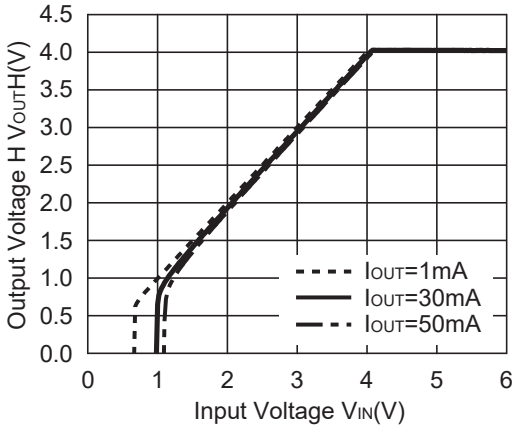

R1163x40x LP Mode

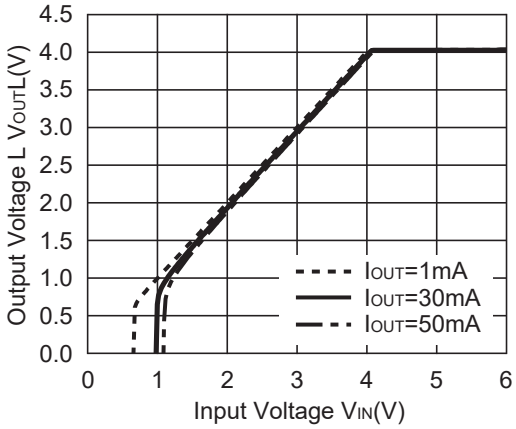

3) Supply Current vs. Input Voltage

R1163x151x FT Mode

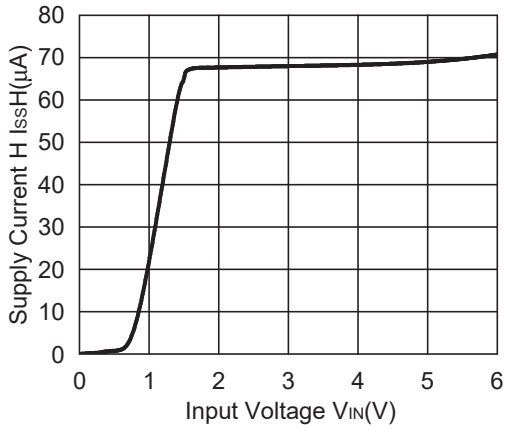

R1163x151x LP Mode

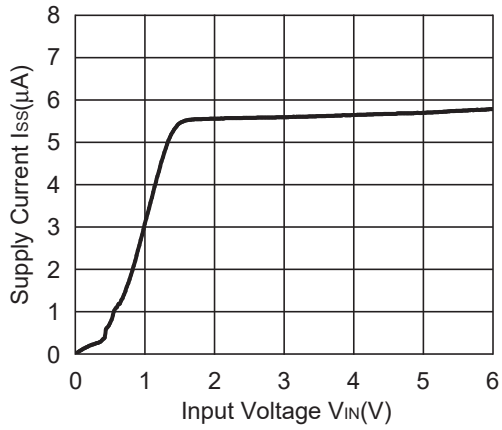

R1163x281x FT Mode

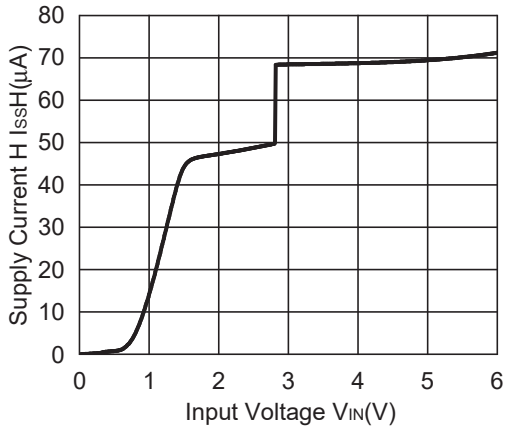

R1163x281x LP Mode

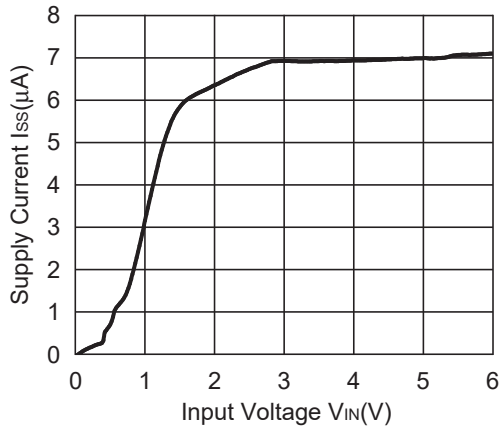

R1163x401x FT Mode

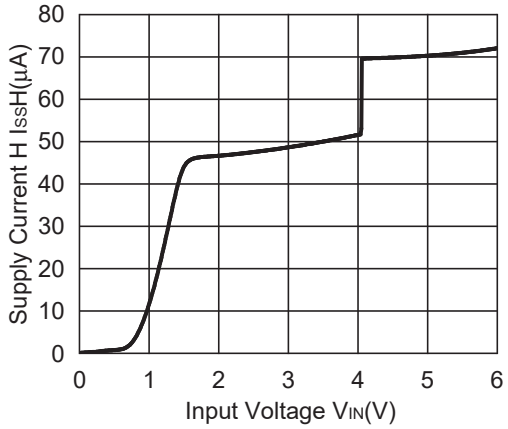

R1163x401x LP Mode

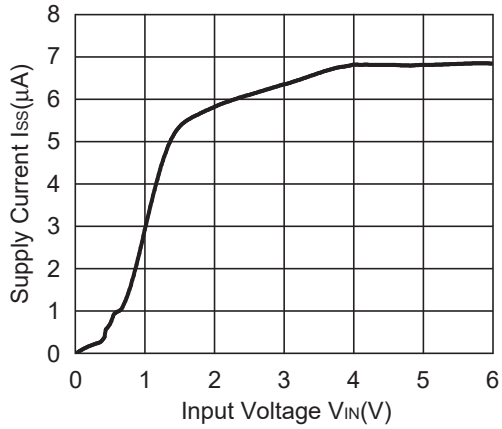

4) Output Voltage vs. Temperature

R1163x151x FT Mode

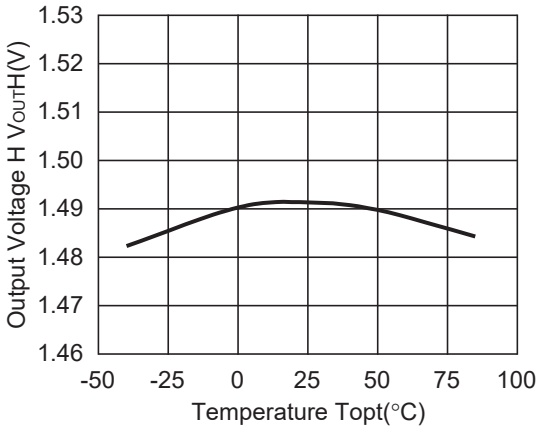

R1163x151x LP Mode

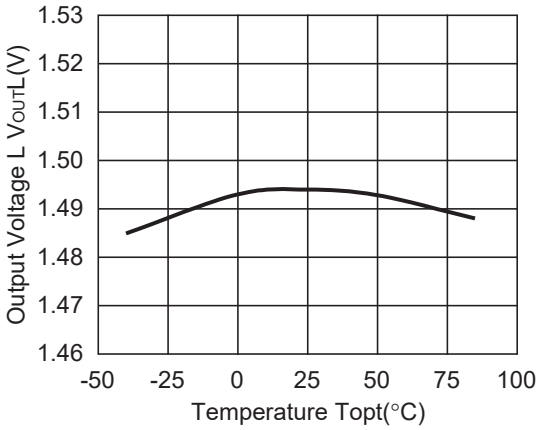

R1163x281x FT Mode

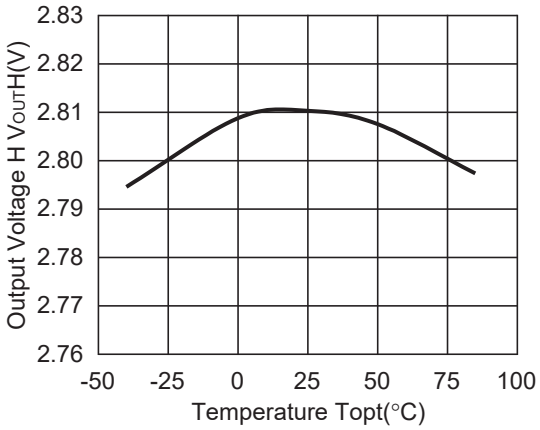

R1163x281x LP Mode

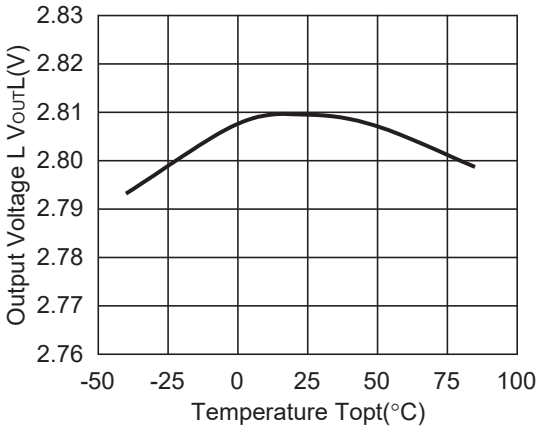

R1163x401x FT Mode

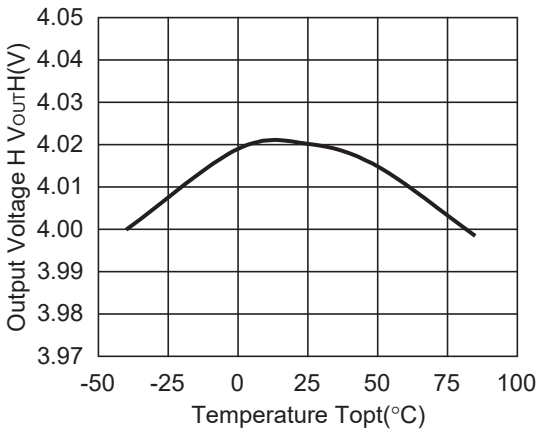

R1163x401x LP Mode

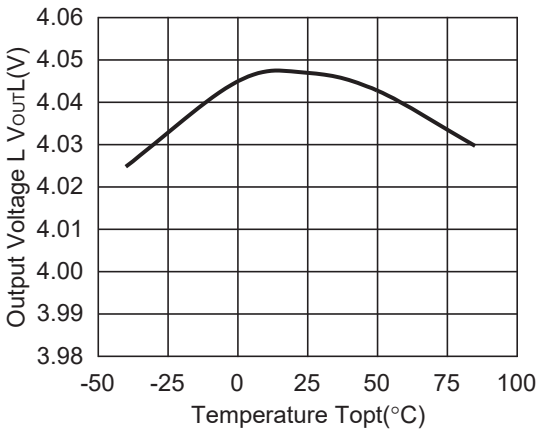

5) Supply Current vs. Temperature

R1163x151x FT Mode

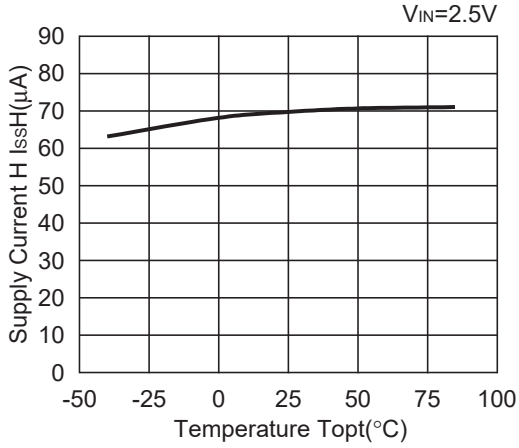

R1163x151x LP Mode

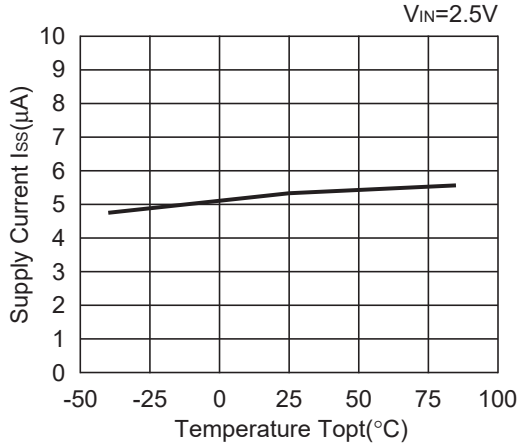

R1163x281x FT Mode

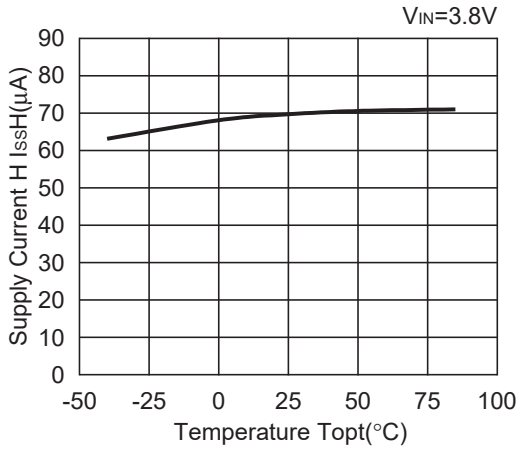

R1163x281x LP Mode

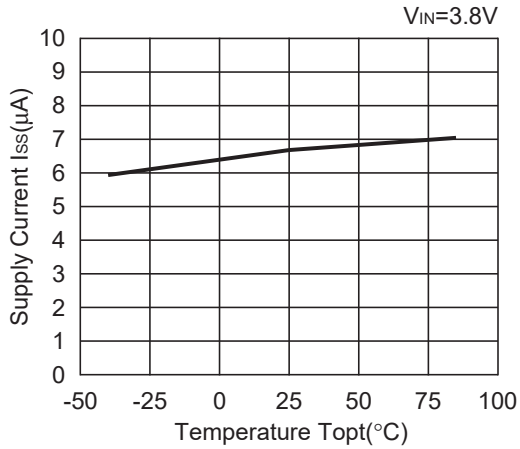

R1163x401x FT Mode

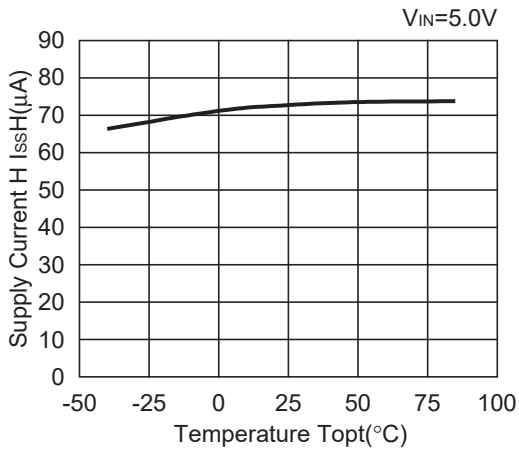

R1163x401x LP Mode

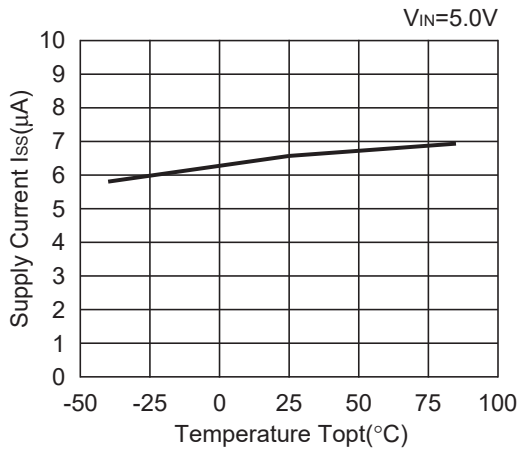

6) Standby Current vs. Input Voltage

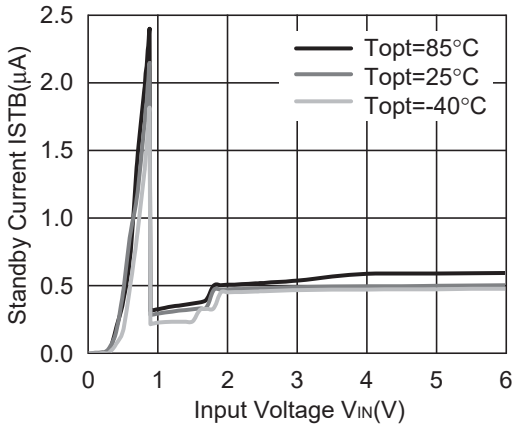

7) Reverse Current vs. Output Voltage

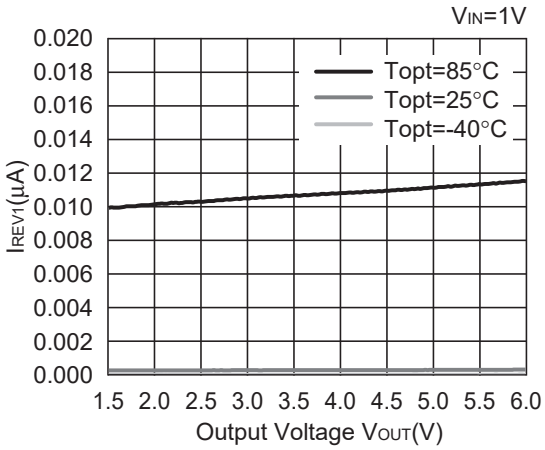

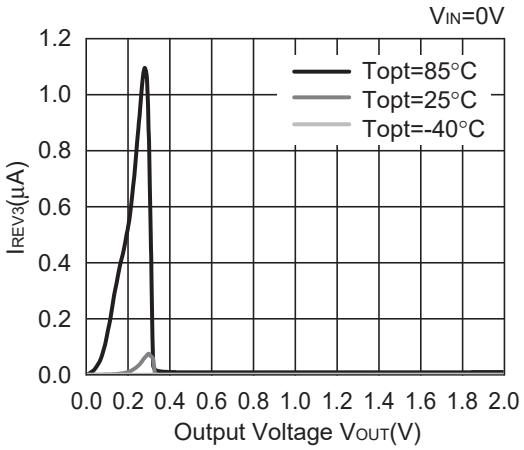

8) Dropout Voltage vs. Output Current

R1163x151x FT Mode

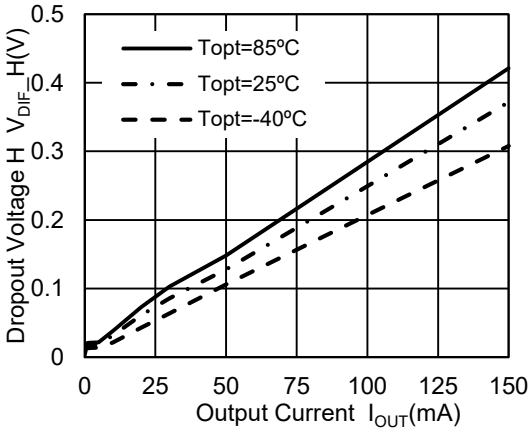

R1163x151x LP Mode

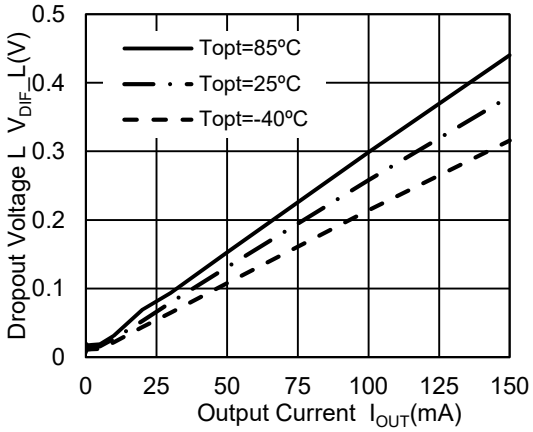

R1163x161x FT Mode

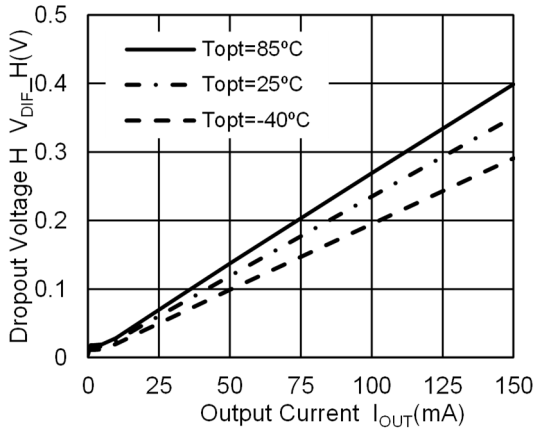

R1163x161x LP Mode

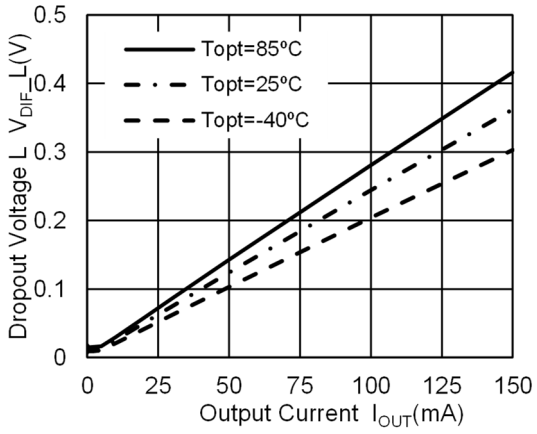

R1163x171x FT Mode

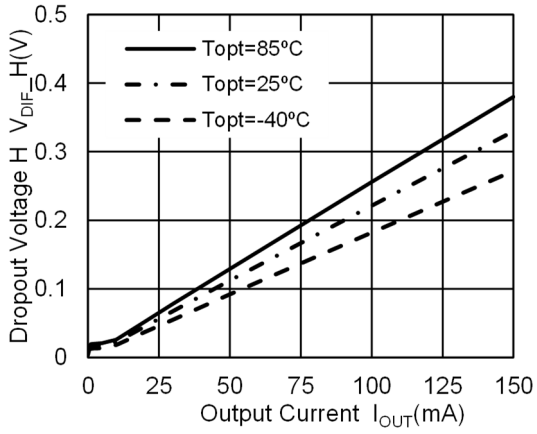

R1163x171x LP Mode

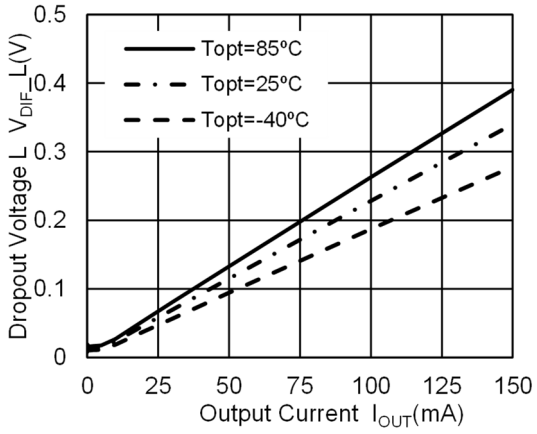

R1163x181x FT Mode

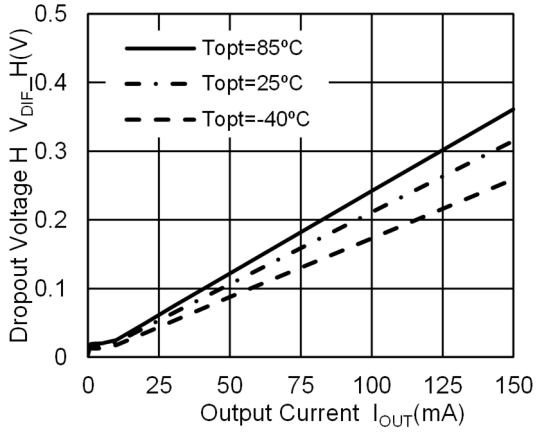

R1163x181x LP Mode

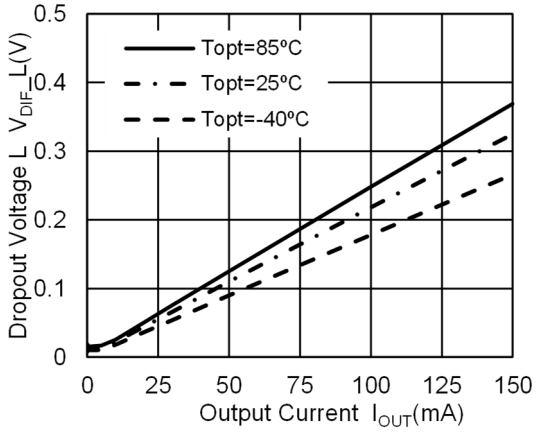

R1163x211x FT Mode

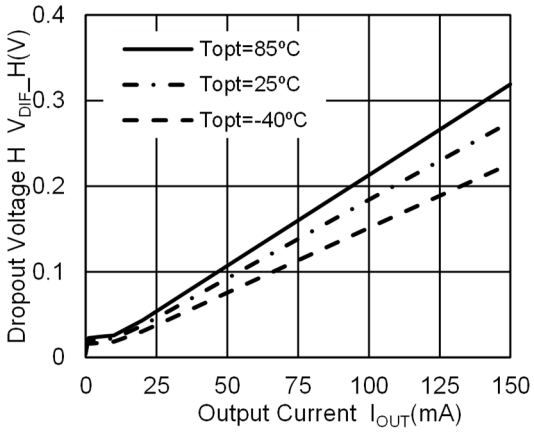

R1163x211x LP Mode

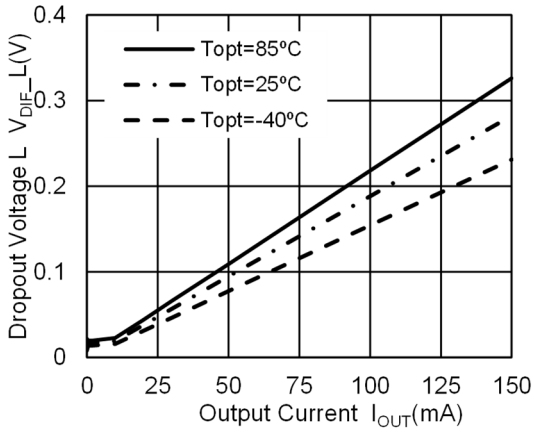

R1163x281x FT Mode

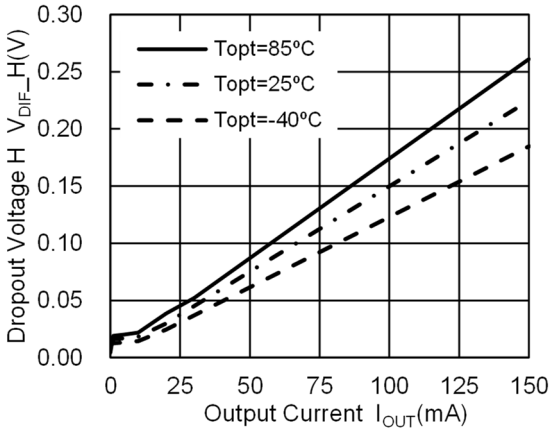

R1163x281x LP Mode

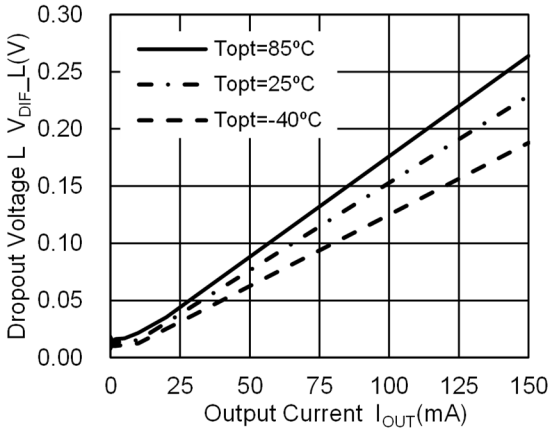

R1163x401x FT Mode

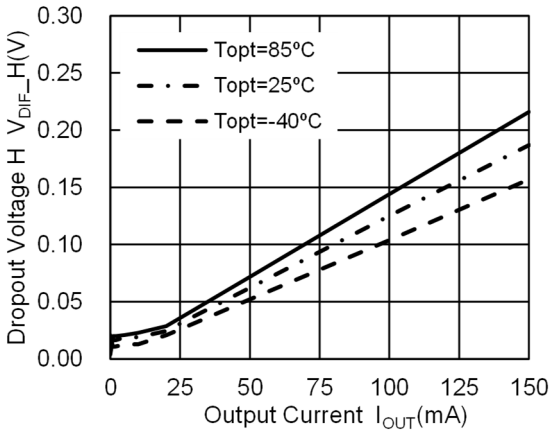

R1163x401x LP Mode

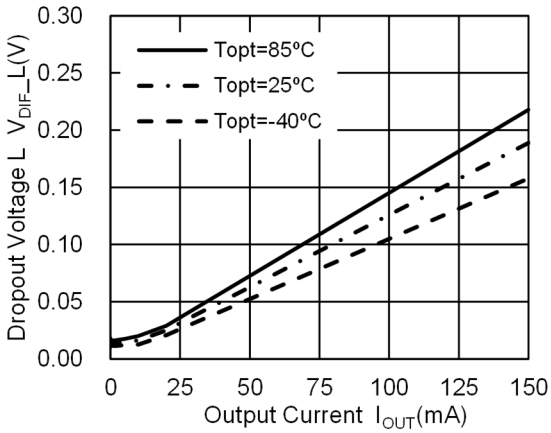

9) Dropout Voltage vs. Set Output Voltage

R1163x FT Mode

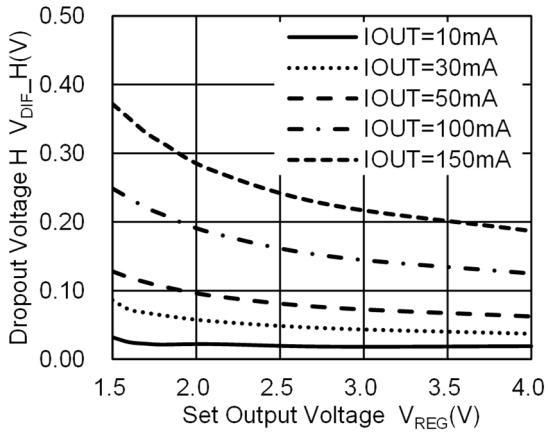

R1163x LP Mode

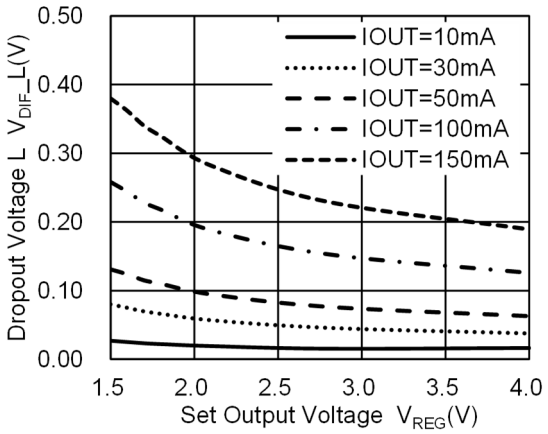

10) Ripple Rejection vs. Input Bias Voltage

R1163x281x FT Mode

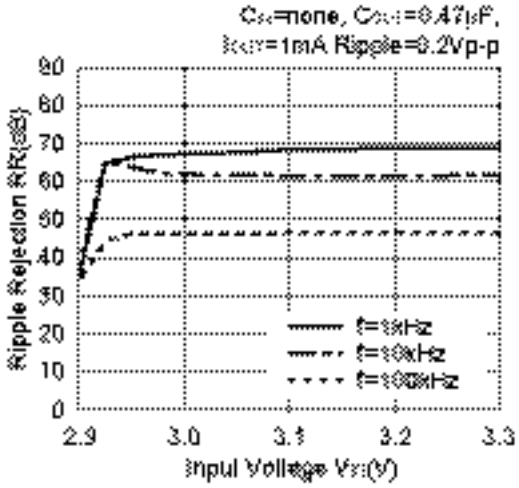

R1163x281x FT Mode

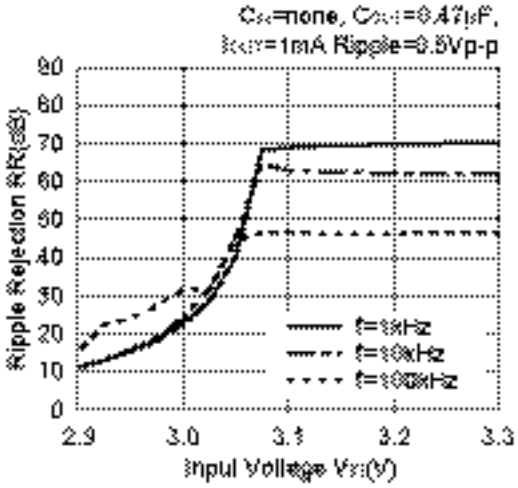

R1162x281x FT Mode

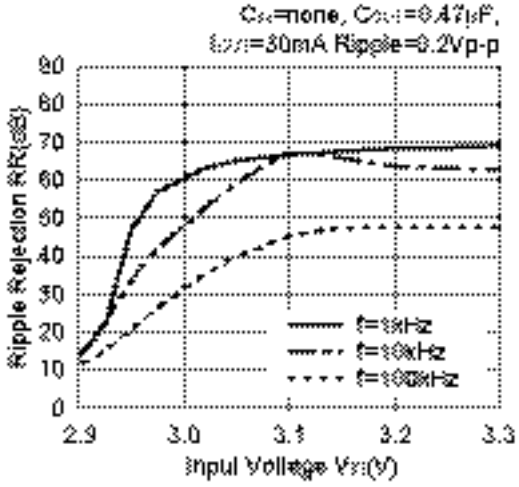

R1162x281x FT Mode

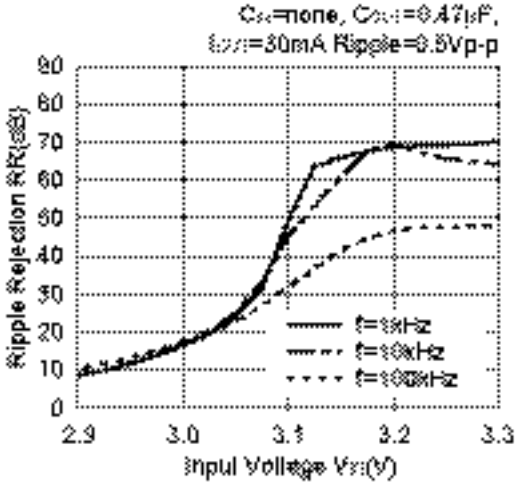

R1163x281x FT Mode

C_{IN}=none, C_{OUT}=0.47µF,
I_{OUT}=50mA Ripple=0.2Vp-p

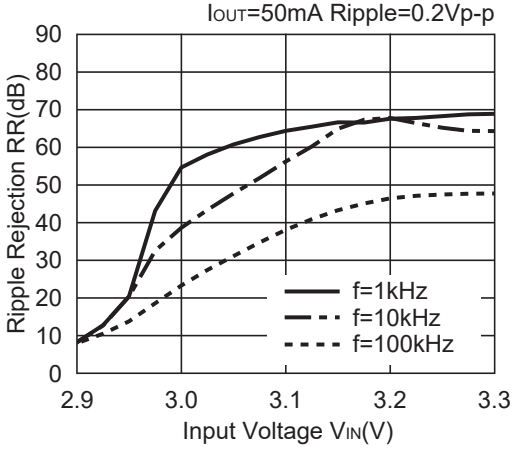

R1163x281x FT Mode

C_{IN}=none, C_{OUT}=0.47µF,
I_{OUT}=50mA Ripple=0.5Vp-p

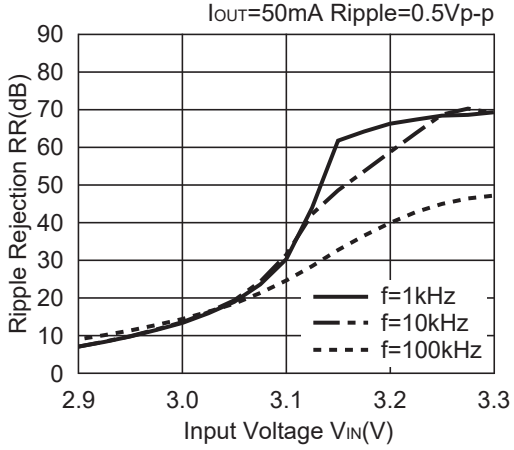

11) Ripple Rejection vs. Frequency

R1163x151x FT Mode

C_{IN}=none, C_{OUT}=0.47µF,
V_{IN}=2.5V_{DC}+0.2Vp-p

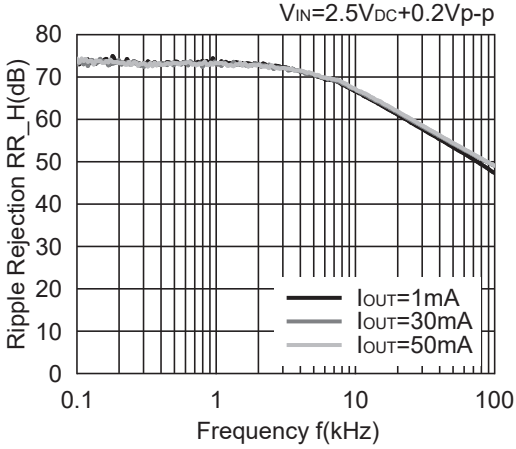

R1163x151x LP Mode

C_{IN}=none, C_{OUT}=0.47µF,
V_{IN}=2.5V_{DC}+0.2Vp-p

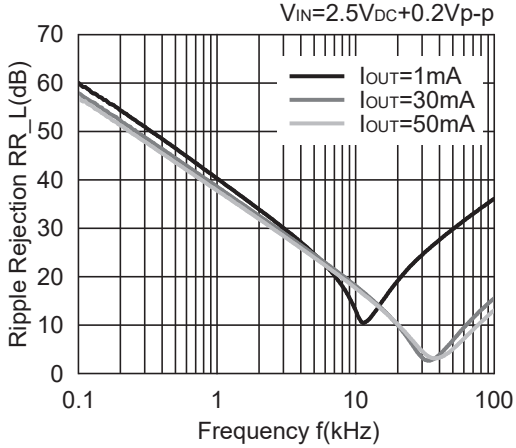

R1163x281x FT Mode

C_{IN}=none, C_{OUT}=0.47µF,
V_{IN}=3.8V_{DC}+0.2Vp-p

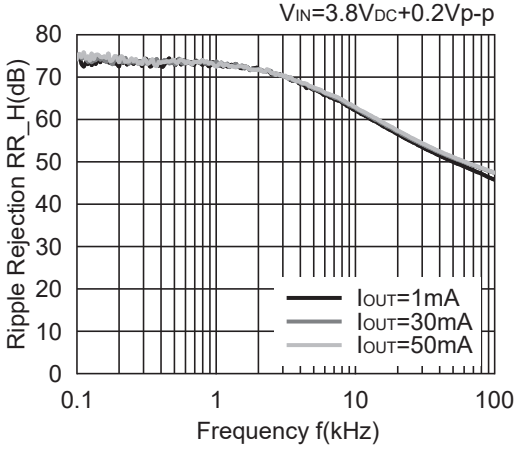

R1163x281x LP Mode

C_{IN}=none, C_{OUT}=0.47µF,
V_{IN}=3.8V_{DC}+0.2Vp-p

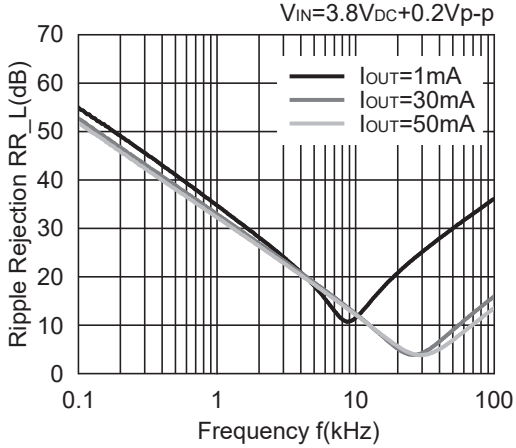

R1163x401x FT Mode

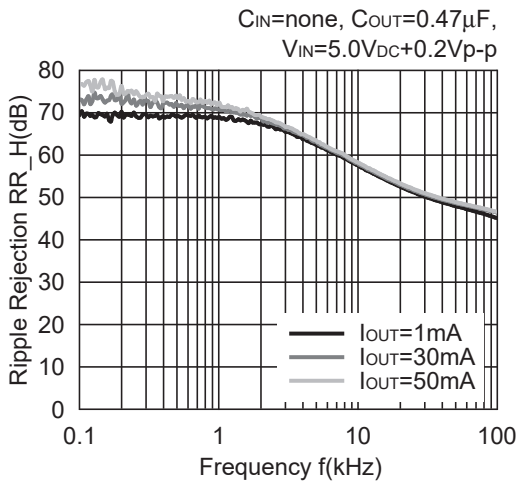

R1163x401x LP Mode

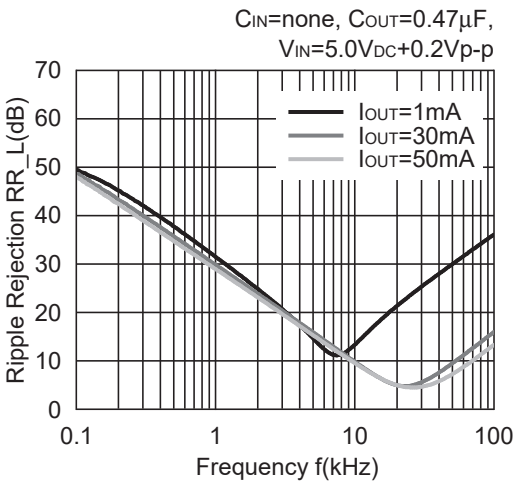

12) Input Transient Response

R1163x151x FT Mode

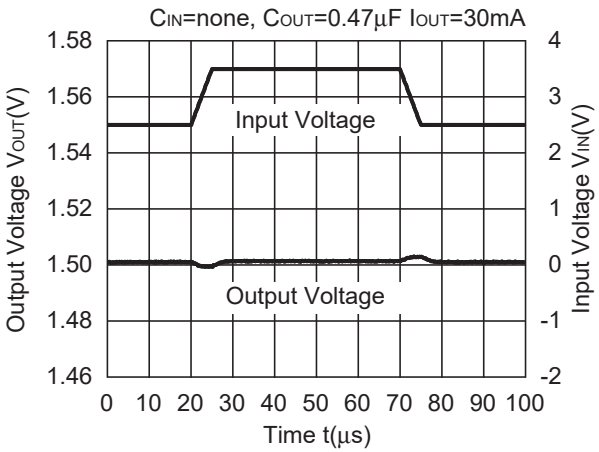

R1163x151x LP Mode

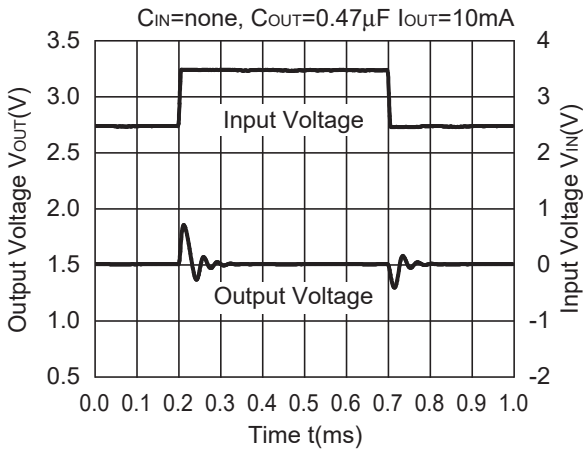

R1163x151x LP Mode

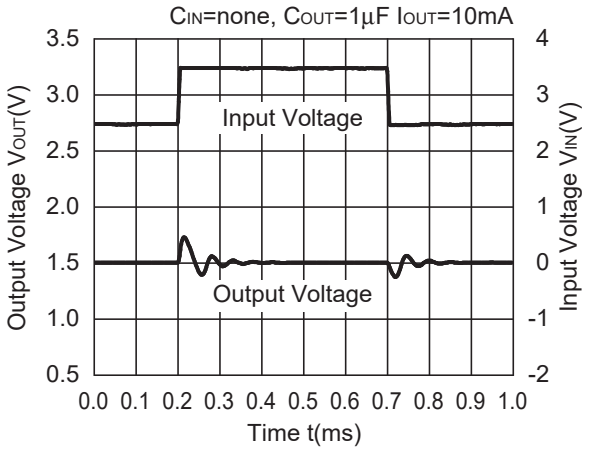

R1163x281x FT Mode

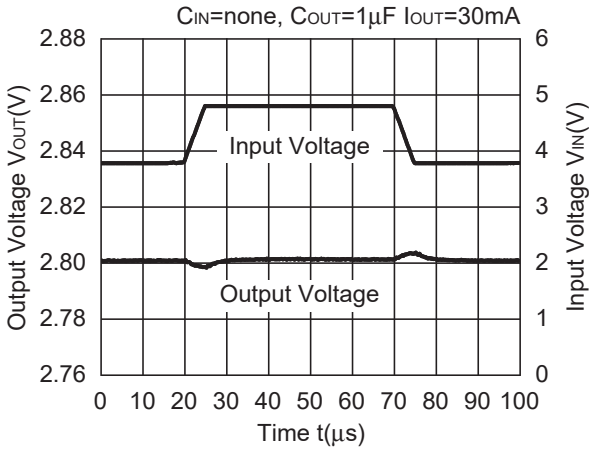

R1163x281x FT Mode

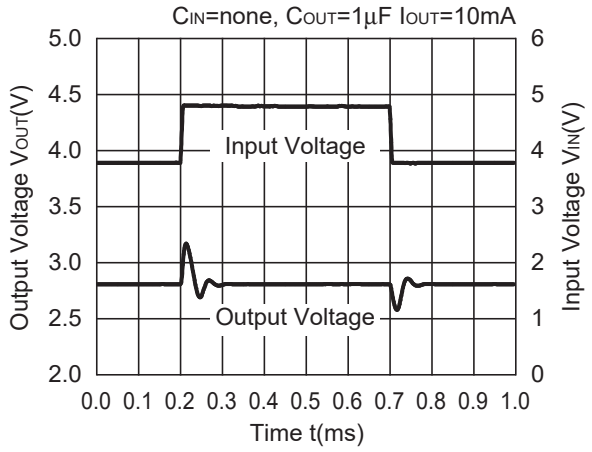

13) Load Transient Response

R1163x151x FT Mode

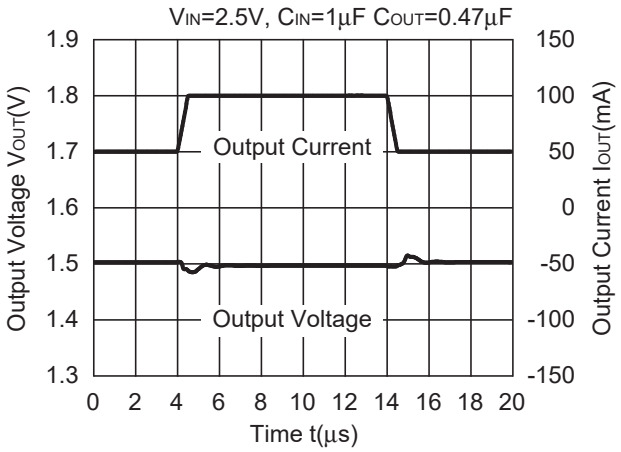

R1163x151x FT Mode

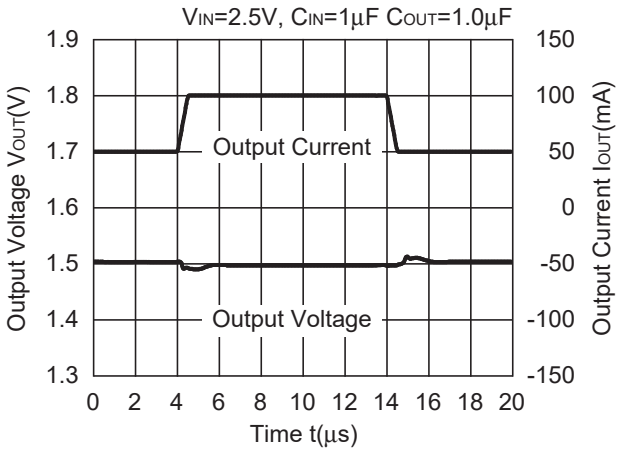

R1163x151x FT Mode

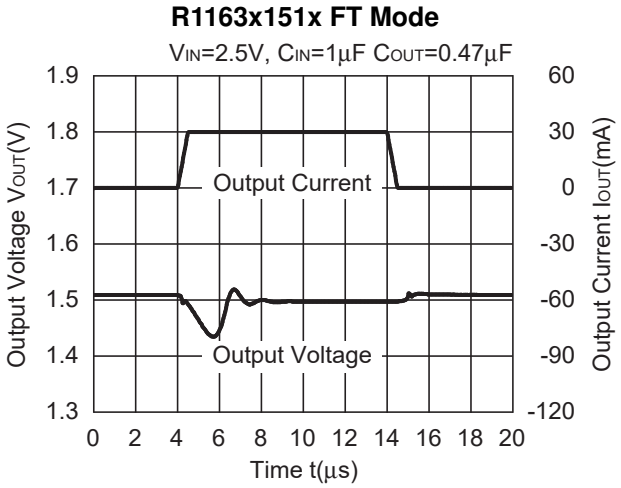

R1163x151x FT Mode

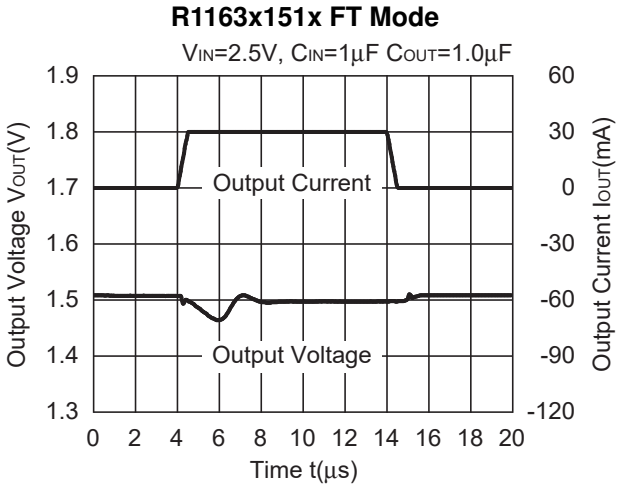

R1163x151x LP Mode

V_{IN}=2.5V, C_{IN}=1µF C_{OUT}=0.47µF

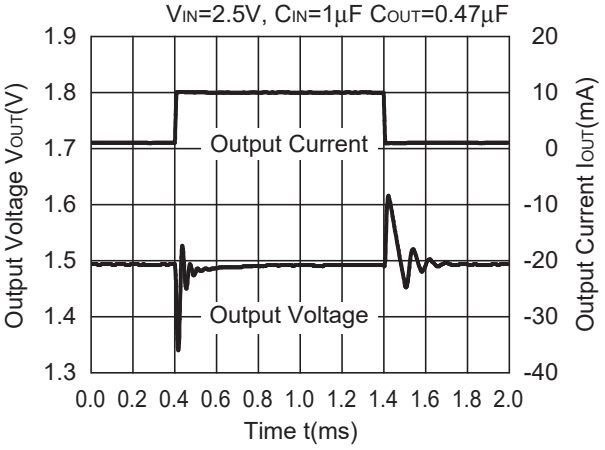

R1163x151x LP Mode

V_{IN}=3.8V, C_{IN}=1µF C_{OUT}=1µF

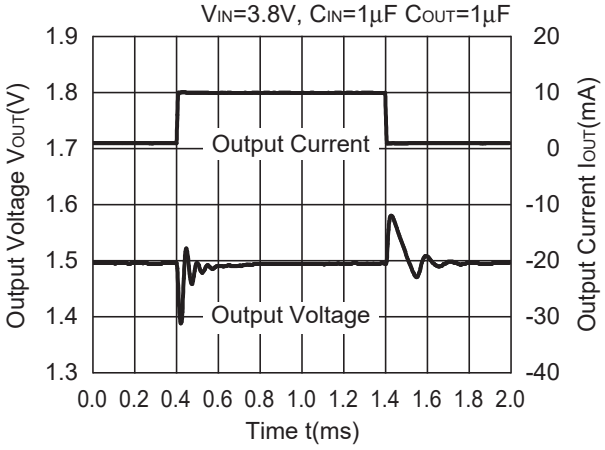

R1163x281x FT Mode

V_{IN}=3.8V, C_{IN}=1µF C_{OUT}=0.47µF

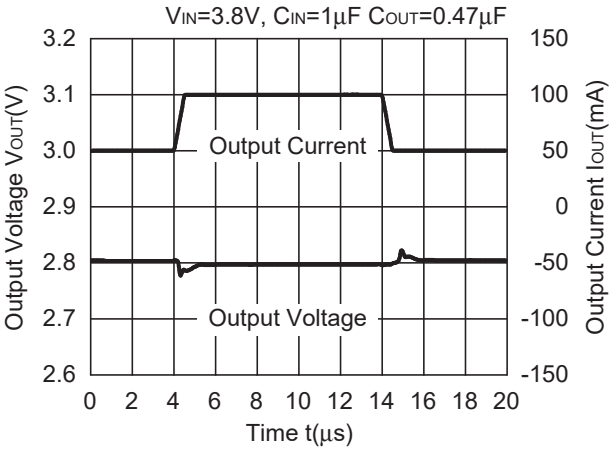

R1163x281x FT Mode

V_{IN}=3.8V, C_{IN}=1µF C_{OUT}=1µF

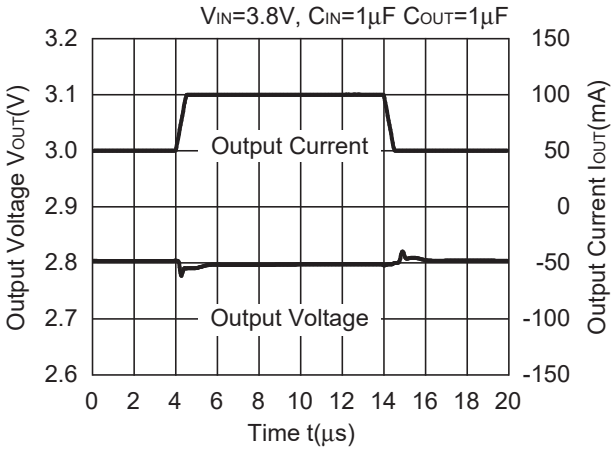

R1163x281x FT Mode

V_{IN}=3.8V, C_{IN}=1µF C_{OUT}=0.47µF

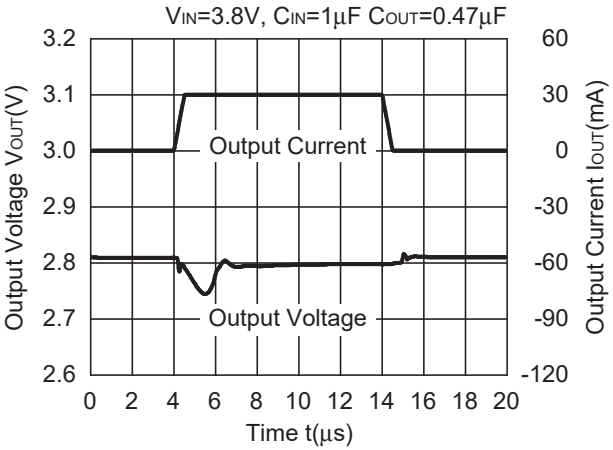

R1163x281x FT Mode

V_{IN}=3.8V, C_{IN}=1µF C_{OUT}=1µF

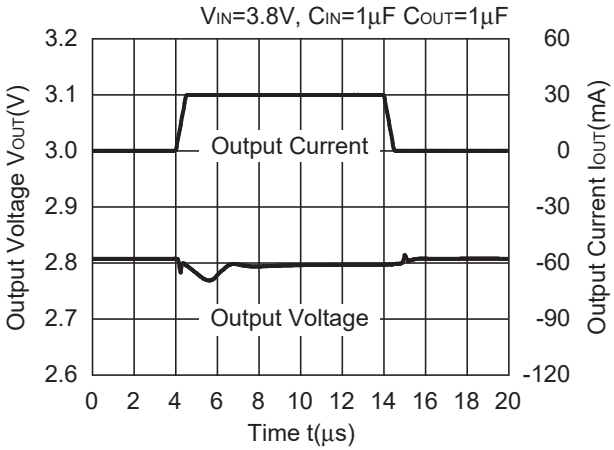

R1163x281x LP Mode

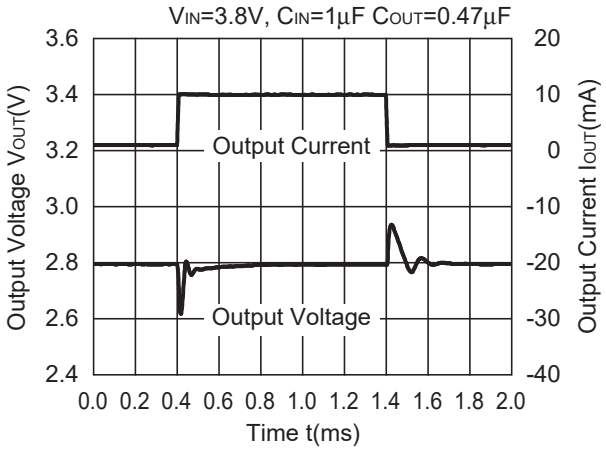

R1163x281x LP Mode

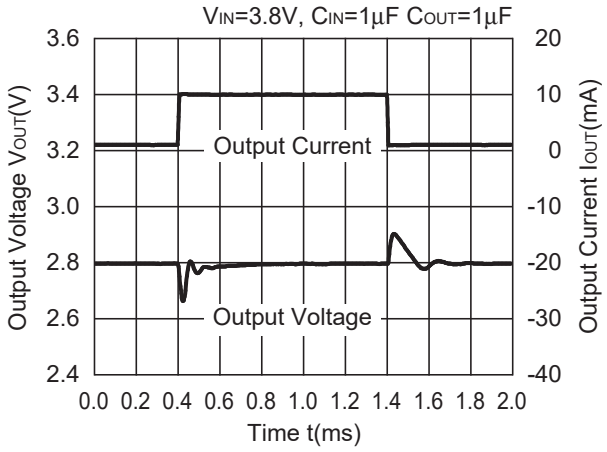

14) Turn on speed with CE pin

R1163x151x FT Mode

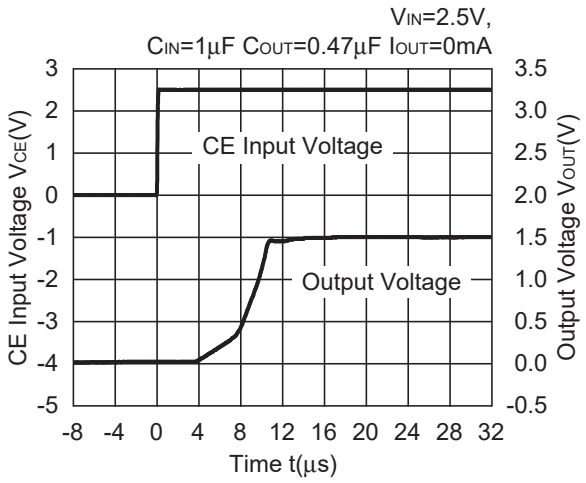

R1163x151x LP Mode

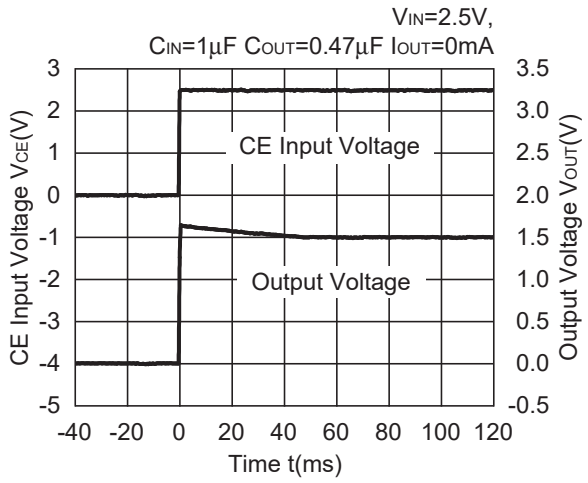

R1163x151x FT Mode

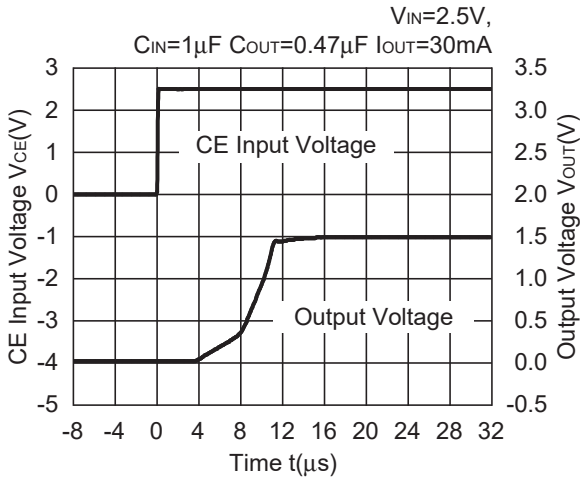

R1163x151x LP Mode

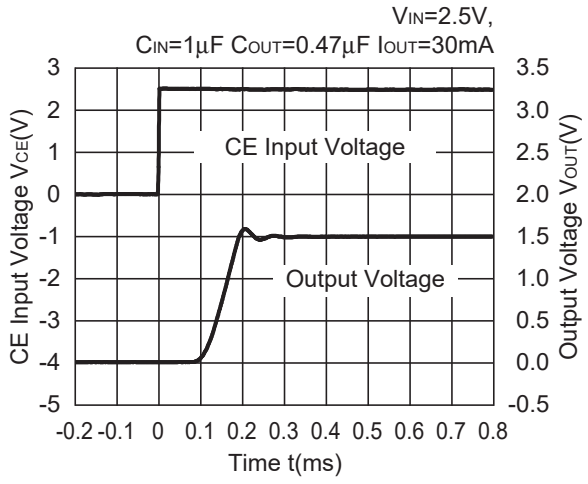

R1163x151x FT Mode

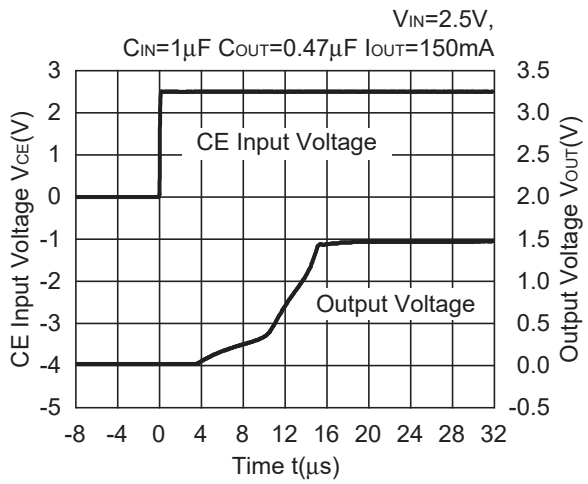

R1163x151x LP Mode

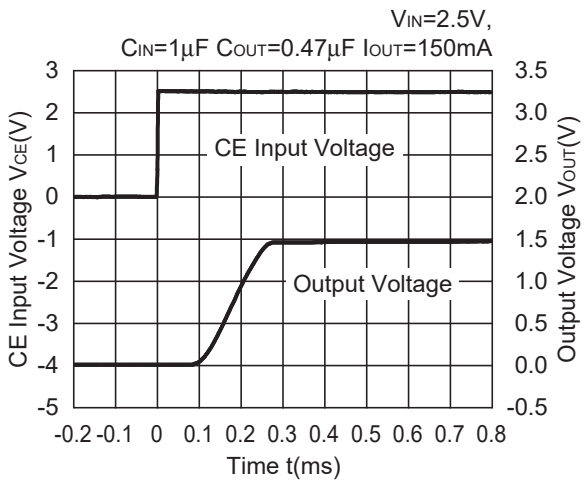

R1163x281x FT Mode

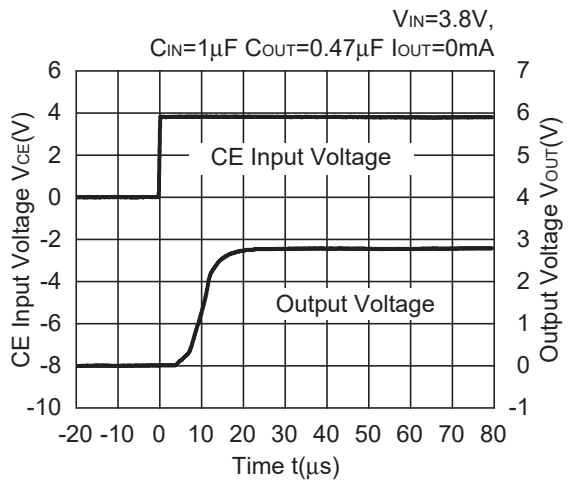

R1163x281x LP Mode

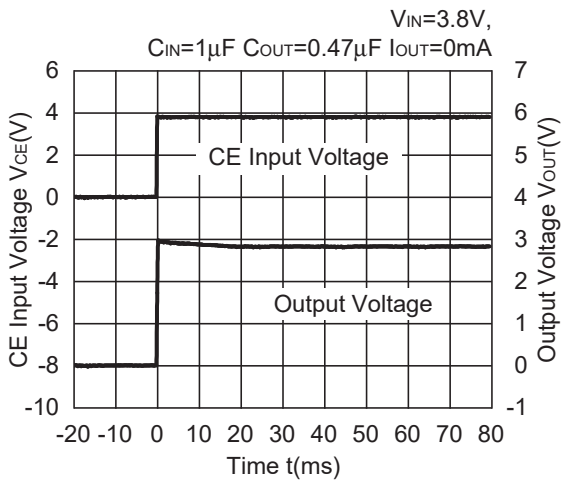

R1163x281x FT Mode

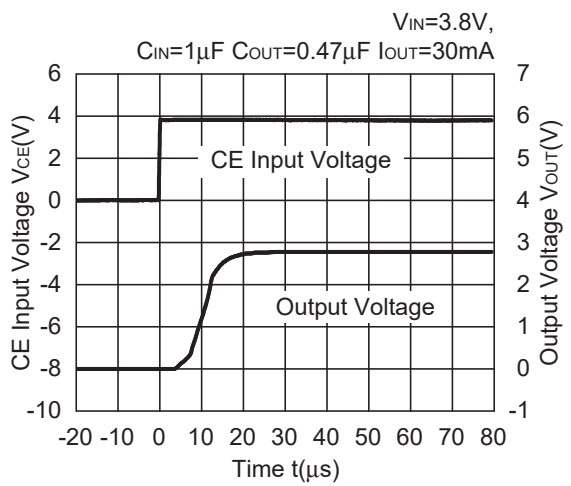

R1163x281x LP Mode

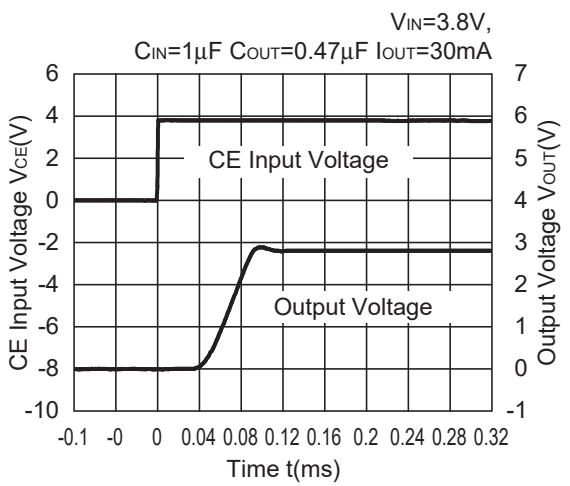

R1163x281x FT Mode

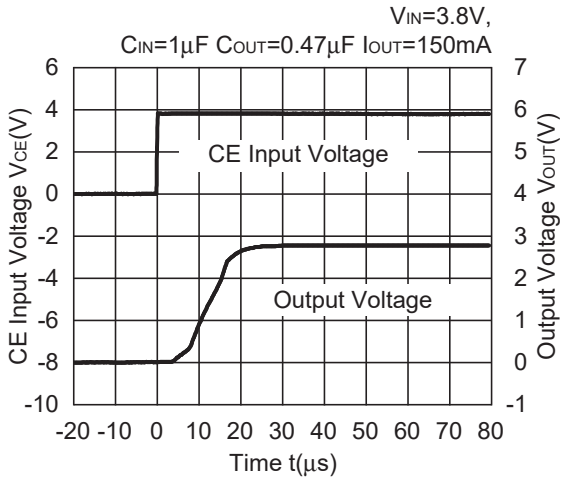

R1163x281x LP Mode

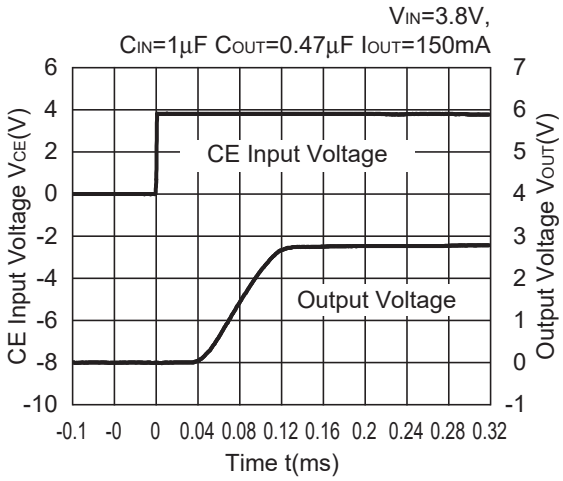

R1163x401x FT Mode

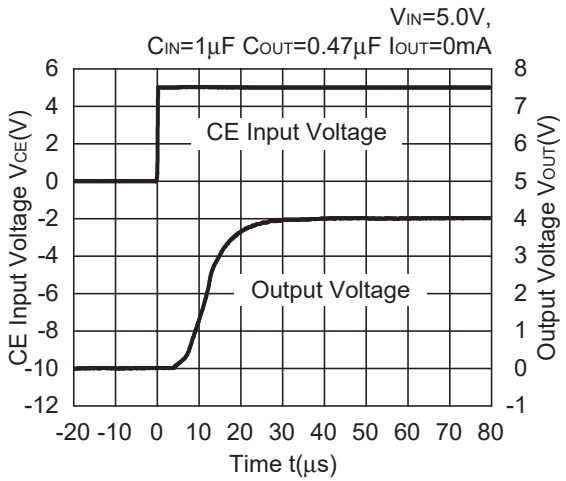

R1163x401x LP Mode

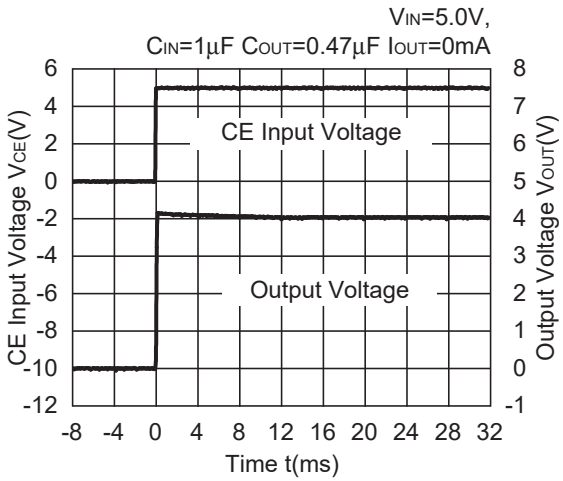

R1163x401x FT Mode

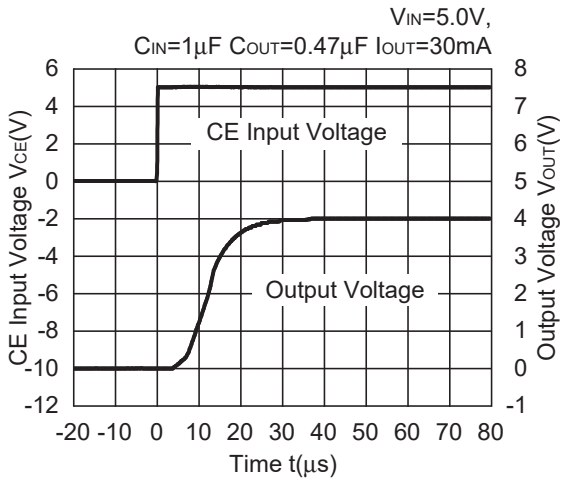

R1163x401x LP Mode

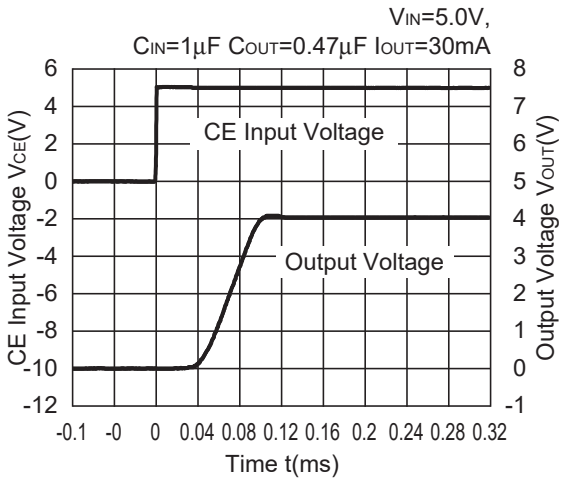

R1163x401x FT Mode

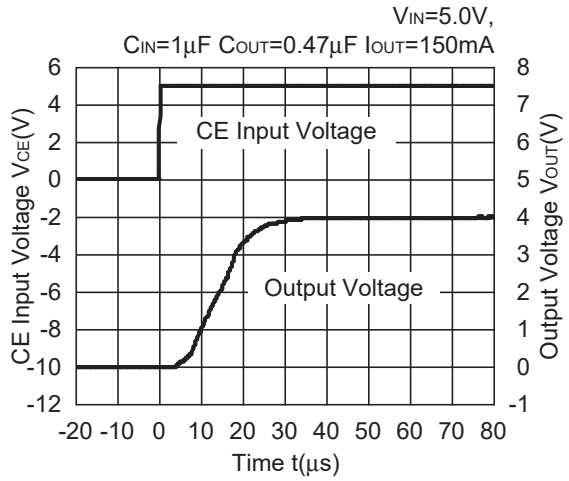

R1163x401x LP Mode

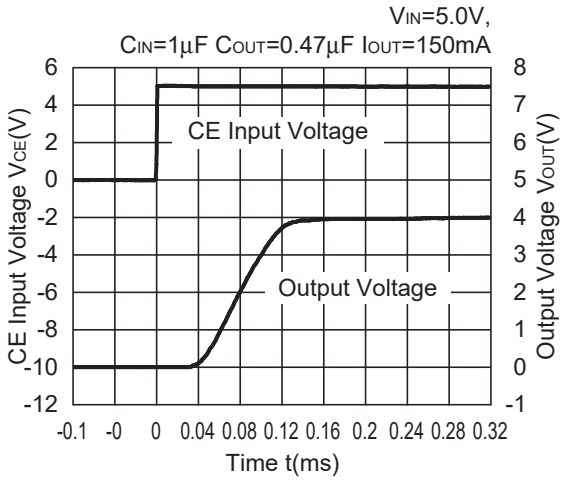

15) Turn off speed with CE pin

R1163x151xD

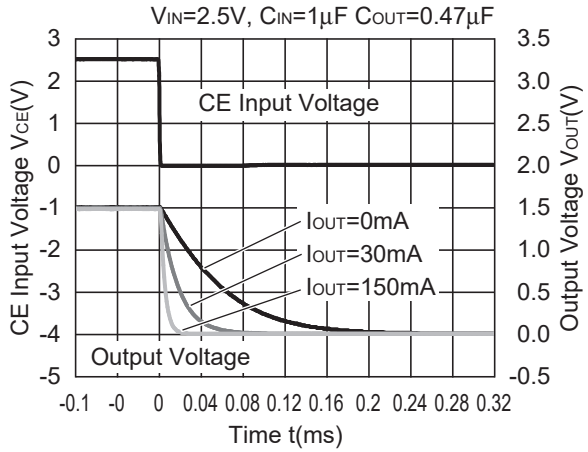

R1163x281xD

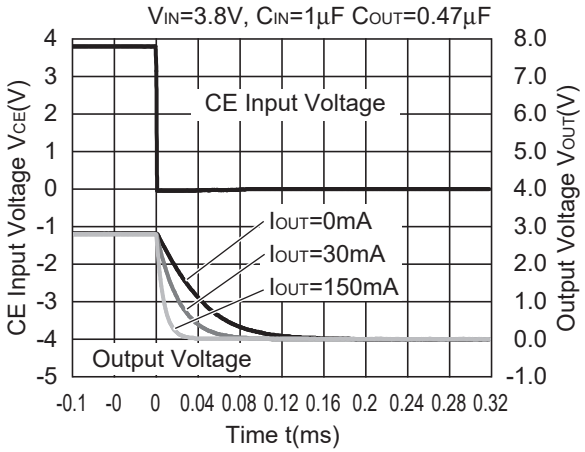

R1163x401xD

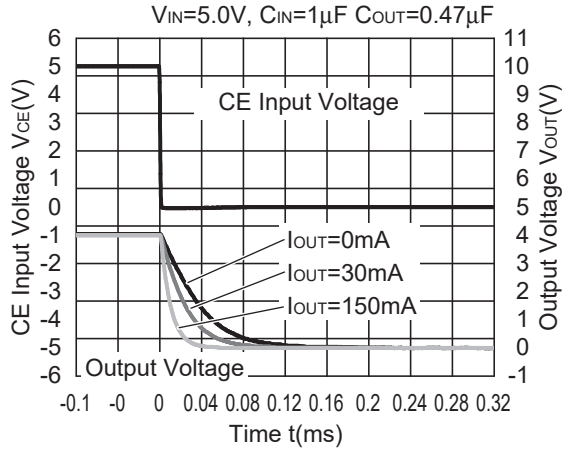

16) Output Voltage at Mode alternative point

R1163x151B/D

V_{IN}=2.5V, C_{IN}=Ceramic 1.0µF,
C_{OUT}=Ceramic 0.47µF

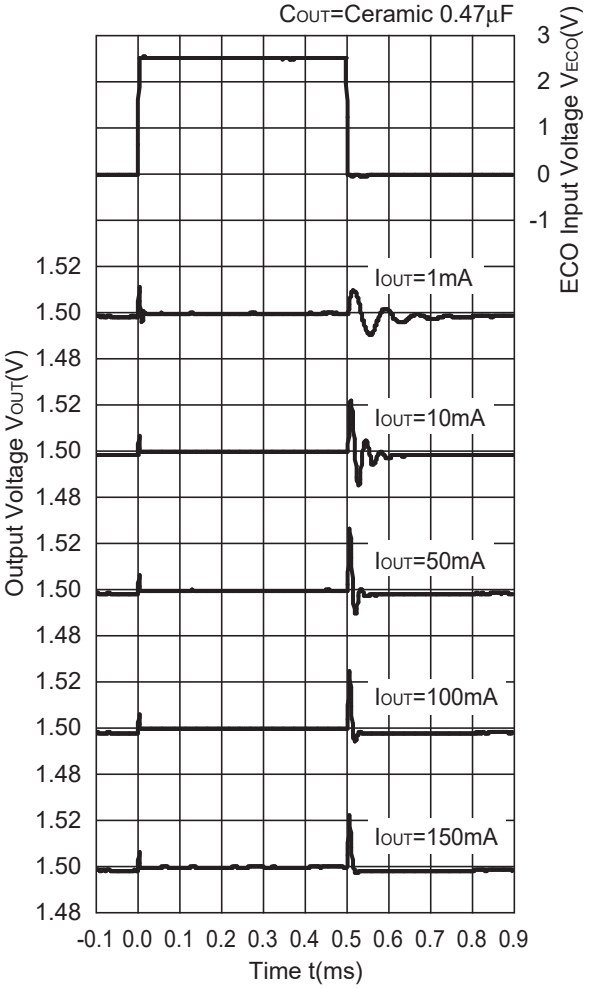

R1163x281B/D

V_{IN}=3.8V, C_{IN}=Ceramic 1.0µF,
C_{OUT}=Ceramic 0.47µF

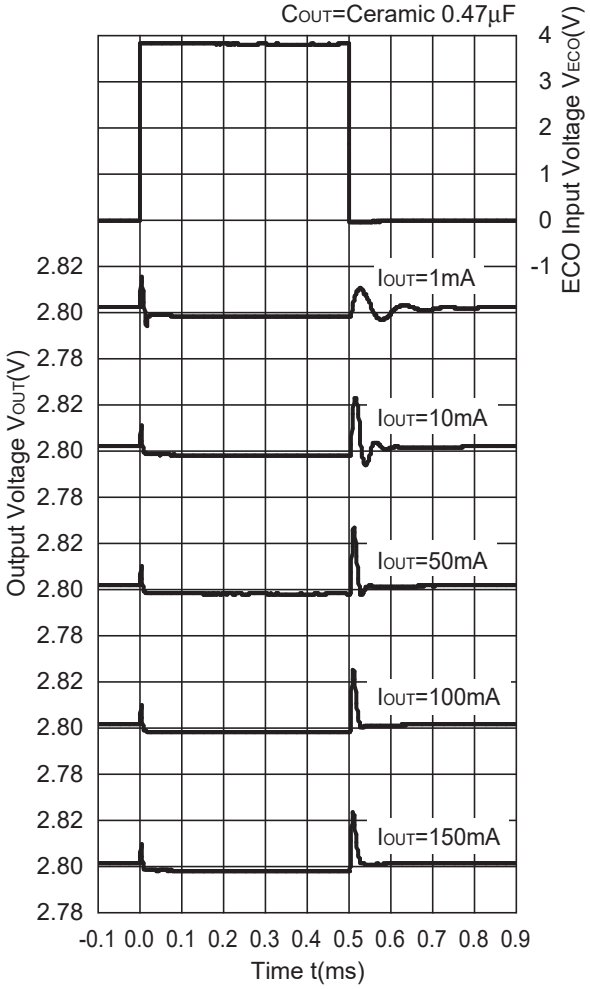

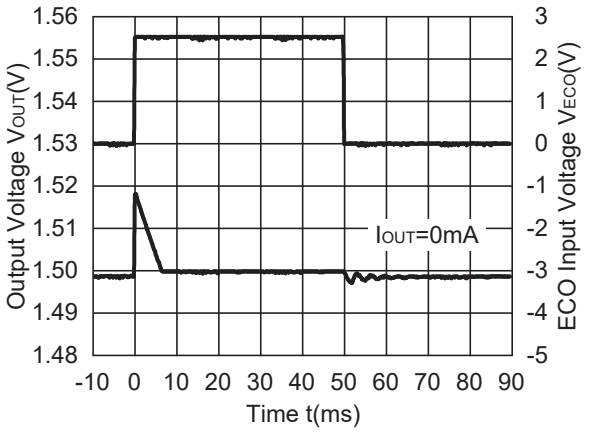

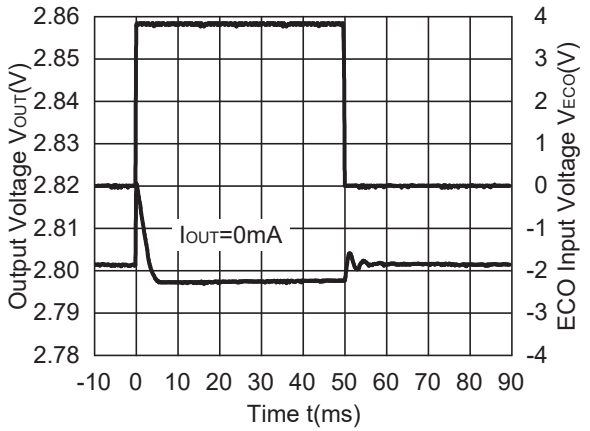

TECHNICAL NOTES

When using these ICs, consider the following points:

In these ICs, phase compensation is made for securing stable operation even if the load current is varied. For this purpose, be sure to use a capacitor C_{OUT} with good frequency characteristics and ESR (Equivalent Series Resistance) in the range described as follows:

The relations between I_{OUT} (Output Current) and ESR of Output Capacitor are shown below. The conditions when the white noise level is under 40µV (Avg.) are marked as the hatched area in the graph.

<Test conditions>

(1) Frequency band: 10Hz to 2MHz

R1163x151x FT Mode

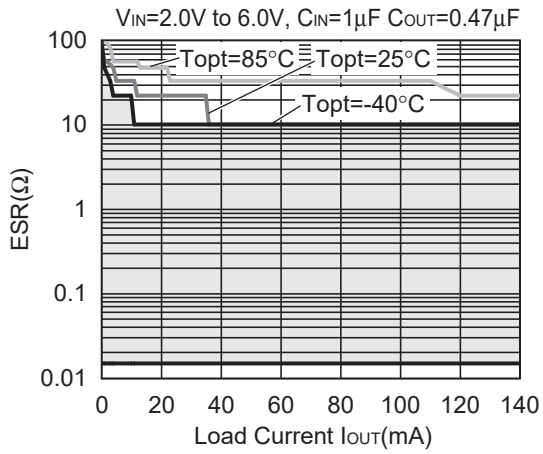

R1163x151x LP Mode

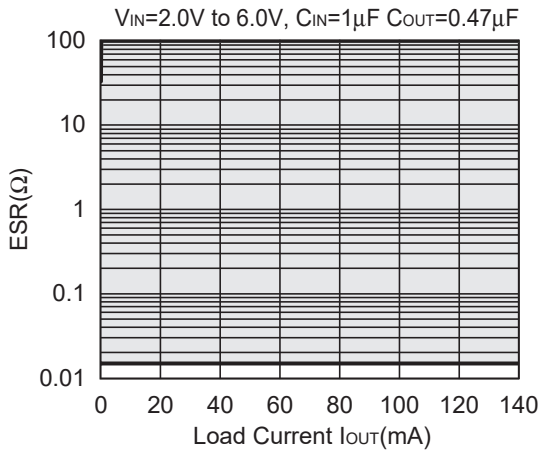

R1163x281x FT Mode

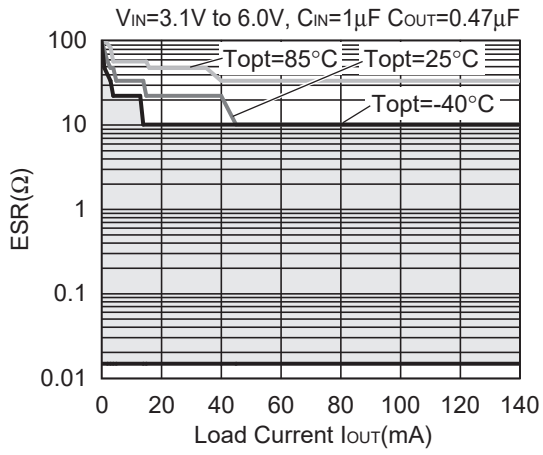

R1163x281x LP Mode

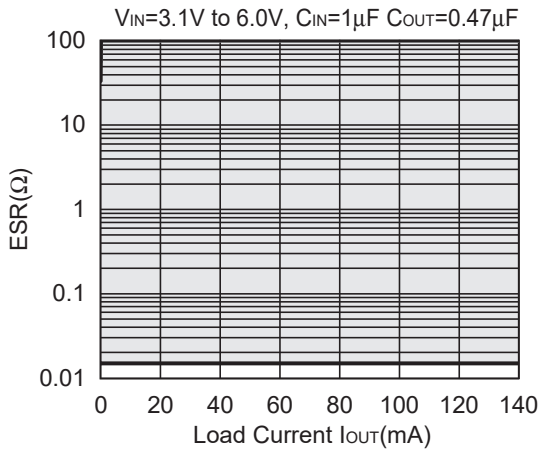

1. The products and the product specifications described in this document are subject to change or discontinuation of production without notice for reasons such as improvement. Therefore, before deciding to use the products, please refer to our sales representatives for the latest information thereon.
2. The materials in this document may not be copied or otherwise reproduced in whole or in part without the prior written consent of us.
3. This product and any technical information relating thereto are subject to complementary export controls (so-called KNOW controls) under the Foreign Exchange and Foreign Trade Law, and related politics ministerial ordinance of the law. (Note that the complementary export controls are inapplicable to any application-specific products, except rockets and pilotless aircraft, that are insusceptible to design or program changes.) Accordingly, when exporting or carrying abroad this product, follow the Foreign Exchange and Foreign Trade Control Law and its related regulations with respect to the complementary export controls.
4. The technical information described in this document shows typical characteristics and example application circuits for the products. The release of such information is not to be construed as a warranty of or a grant of license under our or any third party's intellectual property rights or any other rights.
5. The products listed in this document are intended and designed for use as general electronic components in standard applications (office equipment, telecommunication equipment, measuring instruments, consumer electronic products, amusement equipment etc.). Those customers intending to use a product in an application requiring extreme quality and reliability, for example, in a highly specific application where the failure or misoperation of the product could result in human injury or death should first contact us.
    - Aerospace Equipment
    - Equipment Used in the Deep Sea
    - Power Generator Control Equipment (nuclear, steam, hydraulic, etc.)
    - Life Maintenance Medical Equipment
    - Fire Alarms / Intruder Detectors
    - Vehicle Control Equipment (automotive, airplane, railroad, ship, etc.)
    - Various Safety Devices
    - Traffic control system
    - Combustion equipment

    In case your company desires to use this product for any applications other than general electronic equipment mentioned above, make sure to contact our company in advance. Note that the important requirements mentioned in this section are not applicable to cases where operation requirements such as application conditions are confirmed by our company in writing after consultation with your company.
6. We are making our continuous effort to improve the quality and reliability of our products, but semiconductor products are likely to fail with certain probability. In order to prevent any injury to persons or damages to property resulting from such failure, customers should be careful enough to incorporate safety measures in their design, such as redundancy feature, fire containment feature and fail-safe feature. We do not assume any liability or responsibility for any loss or damage arising from misuse or inappropriate use of the products.
7. The products have been designed and tested to function within controlled environmental conditions. Do not use products under conditions that deviate from methods or applications specified in this datasheet. Failure to employ the products in the proper applications can lead to deterioration, destruction or failure of the products. We shall not be responsible for any bodily injury, fires or accident, property damage or any consequential damages resulting from misuse or misapplication of the products.
8. Quality Warranty
    8-1. Quality Warranty Period
    In the case of a product purchased through an authorized distributor or directly from us, the warranty period for this product shall be one (1) year after delivery to your company. For defective products that occurred during this period, we will take the quality warranty measures described in section 8-2. However, if there is an agreement on the warranty period in the basic transaction agreement, quality assurance agreement, delivery specifications, etc., it shall be followed.
    8-2. Quality Warranty Remedies
    When it has been proved defective due to manufacturing factors as a result of defect analysis by us, we will either deliver a substitute for the defective product or refund the purchase price of the defective product.
    Note that such delivery or refund is sole and exclusive remedies to your company for the defective product.
    8-3. Remedies after Quality Warranty Period
    With respect to any defect of this product found after the quality warranty period, the defect will be analyzed by us. On the basis of the defect analysis results, the scope and amounts of damage shall be determined by mutual agreement of both parties. Then we will deal with upper limit in Section 8-2. This provision is not intended to limit any legal rights of your company.
9. Anti-radiation design is not implemented in the products described in this document.
10. The X-ray exposure can influence functions and characteristics of the products. Confirm the product functions and characteristics in the evaluation stage.
11. WLCSP products should be used in light shielded environments. The light exposure can influence functions and characteristics of the products under operation or storage.
12. Warning for handling Gallium and Arsenic (GaAs) products (Applying to GaAs MMIC, Photo Reflector). These products use Gallium (Ga) and Arsenic (As) which are specified as poisonous chemicals by law. For the prevention of a hazard, do not burn, destroy, or process chemically to make them as gas or power. When the product is disposed of, please follow the related regulation and do not mix this with general industrial waste or household waste.
13. Please contact our sales representatives should you have any questions or comments concerning the products or the technical information.

NISSHINBO

Nisshinbo Micro Devices Inc.

Official website
https://www.nisshinbo-microdevices.co.jp/en/

Purchase information
https://www.nisshinbo-microdevices.co.jp/en/buy/

ENTEGRECİ

Bu belge www.entegreci.com üzerinden sunulmaktadır.

Elektronik komponent tedarikinde Entegreci

Entegreci, Eskişehir merkezli, Türkiye geneline satış yapan bir elektronik komponent mağazasıdır. Entegreler (IC), mikrodenetleyiciler, transistörler, diyotlar, pasif elemanlar, konnektörler, modüller ve geliştirme kartları tek adetten seri üretim adetlerine kadar satılır. Ürün sayfalarında güncel stok durumunu, fiyatı ve datasheet bağlantısını bulabilirsiniz.

Parça koduyla arama

Üretici parça numarasını yazın; stok ve fiyatı hemen görün.

www.entegreci.com

Ürün kategorileri

Entegreden kapasitöre tüm elektronik komponent kategorileri.

Kategorilere göz atın

Üreticiler

Aradığınız üreticinin ürünlerini tek sayfada inceleyin.

Üreticileri görün

Toplu alım ve teklif

Listede olmayan ya da yüksek adetli parçalar için teklif isteyin.

Teklif isteyin

www.entegreci.com | **destek@entegreci.com** | **0850 305 90 34**

Entegreci is an online electronic components store based in Türkiye. Search by manufacturer part number to see stock, prices and datasheets for integrated circuits, microcontrollers, transistors, passive components and connectors, or request a quote for parts that are not listed.

Bu sayfa Entegreci tarafından eklenmiştir. Belgenin önceki sayfaları asıl yayıncısına aittir ve içeriği değiştirilmemiştir; en güncel sürüm için belgenin yayıncısına başvurun.