∗ R1500J (TO-252-5-P2) is the discontinued product as of July, 2016.

NISSHINBO

R1500x SERIES

500 mA LDO REGULATOR (Operating Voltage up to 24 V)

NO.EA-151-160701

OUTLINE

The R1500x series are CMOS-based positive voltage regulator (VR) ICs. The R1500xxxxB has features of high input voltage operating, 500mA output current drive, and low supply current.

A DMOS transistor is used for the driver, high voltage operating and low on resistance (0.6Ω at V_{OUT}=10V) device is realized. A standard regulator circuit with a current limit circuit and a thermal shutdown circuit are built in the R1500x series.

As the operating temperature range is from -40°C to 105°C and maximum input voltage is up to 24V, the R1500x series are suitable for the constant voltage source for car accessories.

The regulator output voltage is fixed in the R1500x. Output voltage accuracy is ±2.0% and output voltage range is from 3.0V to 12.0V with a step of 0.1V. The chip enable pin realizes ultra low supply current standby mode.

Since the packages for these ICs are the SOT-89-5 for high density mounting of the ICs on boards, and the TO-252-5-P2.

∗) The DMOS (Double Diffused MOS) transistor adopted by R1500x is characterized by a double diffusion structure which comprises a low density n-type (channel) diffused layer and a high density p-type (sources) diffused layer from the edge of the gate electrode. The R1500x series possess outstanding properties of high operating voltage and low on-resistance, which have been achieved by the channel length scaled down to submicron dimensions and decreased thickness of the gate oxide film.

FEATURES

- Input Voltage Range .....4.0V to 24.0V
- Supply Current .....Typ. 70μA
- Standby Current .....Typ. 0.1μA
- Ripple Rejection .....Typ. 60dB (V_{OUT}=5.0V)
- Temperature-Drift Coefficient of Output Voltage .....Typ. ±100ppm/°C
- Output Current.....Min. 500mA (V_{IN}=V_{OUT}+1V)
- Line Regulation .....Typ. 0.05%/V
- Output Voltage Accuracy.....±2%
- Output Voltage.....3.0V to 12.0V (0.1V steps)
  (For other voltages, please refer to MARK INFORMATIONS.)
- Packages.....SOT-89-5, TO-252-5-P2
- Built-in Current Limit Circuit
- Built-in Fold-Back Circuit
- Built-in Thermal Shutdown Circuit
- Operating Temperature range .....–40°C to 105°C

APPLICATIONS

- Power source for home appliances such as refrigerators, rice cookers, electric water warmers, etc.
- Power source for car audio equipment, car navigation system, ETC system, etc.
- Power source for notebook PCs, digital TVs, cordless phones, and private LAN system, etc.
- Power source for office equipment machines such as copiers, printers, facsimiles, scanners, projectors, etc.

BLOCK DIAGRAMS

R1500xxxxB

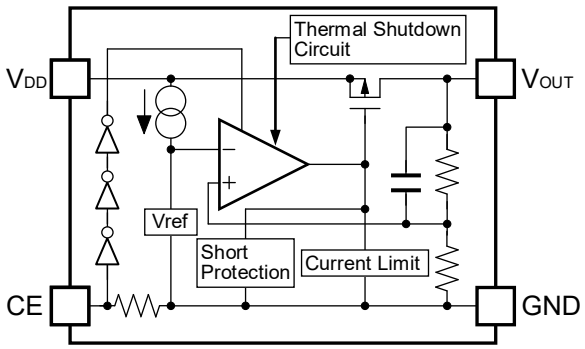

SELECTION GUIDE

The output voltage, package for the ICs can be selected at the user's request.

Product Name	Package	Quantity per Reel	Pb Free	Halogen Free
R1500HxxxB-T1-FE	SOT-89-5	1,000 pcs	Yes	Yes
R1500JxxxB-T1-FE	TO-252-5-P2	3,000 pcs	Yes	Yes

xxx : The output voltage can be designated in the range from 3.0V(030) to 12.0V(120) in 0.1V steps.
(For other voltages, please refer to MARK INFORMATIONS.)

PIN CONFIGURATIONS

● **SOT-89-5**

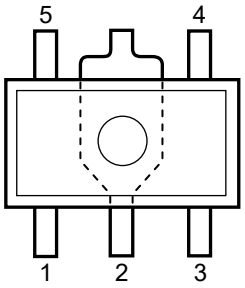

● **TO-252-5-P2**

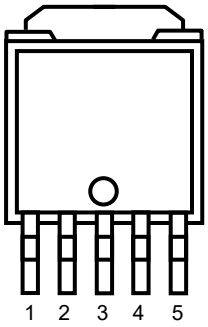

PIN DESCRIPTIONS

● **SOT-89-5**

Pin No.	Symbol	Description
1	V_{DD}	Input Pin
2	GND*	Ground Pin
3	GND*	Ground Pin
4	CE	Chip Enable Pin ("H" Active)
5	V_{OUT}	Output Pin

∗) The GND pin must be wired together when it is mounted on board.

● **TO-252-5-P2**

Pin No.	Symbol	Description
1	V_{DD}	Input Pin
2	GND*	Ground Pin
3	GND*	Ground Pin
4	CE	Chip Enable Pin ("H" Active)
5	V_{OUT}	Output Pin

∗) The GND pin must be wired together when it is mounted on board.

ABSOLUTE MAXIMUM RATINGS

Symbol	Item	Rating	Unit
V_{IN}	Input Voltage	36	V
V_{CE}	Input Voltage (CE Pin)	−0.3 to V_{IN} ≦ 36	V
V_{OUT}	Output Voltage	−0.3 to V_{IN} ≦ 36	V
P_D	Power Dissipation (SOT-89-5)*	900	mW
	Power Dissipation (TO-252-5-P2)*	1900	
Topt	Operating Temperature Range	−40 to 105	°C
Tstg	Storage Temperature Range	−55 to 125	°C

∗) For Power Dissipation, please refer to PACKAGE INFORMATION.

ABSOLUTE MAXIMUM RATINGS

Electronic and mechanical stress momentarily exceeded absolute maximum ratings may cause the permanent damages and may degrade the life time and safety for both device and system using the device in the field.
The functional operation at or over these absolute maximum ratings is not assured.

ELECTRICAL CHARACTERISTICS

- **R1500xxxxB**

Topt=25°C

Symbol	Item	Conditions		Min.	Typ.	Max.	Unit
V_{IN}	Input Voltage			4		24	V
I_{SS}	Supply Current	$V_{IN}=V_{OUT}+1.0V$, $V_{IN}=V_{CE}$			70	130	μA
$I_{standby}$	Standby Current	$V_{IN}=24V$			0.1	1.0	μA
V_{OUT}	Output Voltage	$V_{IN}=V_{OUT}+1.0V$, $I_{OUT}=100mA$		×0.98		×1.02	V
$\Delta V_{OUT}/\Delta I_{OUT}$	Load Regulation	$V_{IN}=V_{OUT}+2.0V$, $0.1mA \leqq I_{OUT} \leqq 200mA$			25	60	mV
$\Delta V_{OUT}/\Delta V_{IN}$	Line Regulation	$V_{OUT}+1V \leqq V_{IN} \leqq 24V$, $I_{OUT}=10mA$			0.05	0.1	%/V
V_{DIF}	Dropout Voltage	$I_{OUT}=200mA$	$3.0V \leqq V_{OUT} < 5.0V$		0.135	0.225	V
			$5.0V \leqq V_{OUT} < 9.0V$		0.115	0.180	
			$9.0V \leqq V_{OUT} \leqq 12.0V$		0.095	0.155	
$\Delta V_{OUT}/\Delta Topt$	Output Voltage Temperature Coefficient	$V_{IN}=V_{OUT}+2.0V$, $I_{OUT}=100\mu A$ $-40°C \leqq Topt \leqq 105°C$			±100		ppm /°C
I_{LIM}	Output Current	$V_{IN}=V_{OUT}+1.0V$		500			mA
I_{SC}	Short Current Limit	$V_{OUT}=0V$			65		mA
RR	Ripple Rejection	f=1kHz, Ripple 0.5Vp-p, $I_{OUT}=100mA$, $V_{IN}=V_{OUT}+2V$	$V_{OUT} \leqq 6.0V$		60		dB
			$V_{OUT} > 6.0V$		50		
V_{CEH}	CE Input Voltage "H"			2.0		V_{IN}	V
V_{CEL}	CE Input Voltage "L"			0		0.4	V
T_{TSD}	Thermal Shutdown Temperature	Junction Temperature		150	170		°C
T_{TSR}	Thermal Shutdown Released Temperature	Junction Temperature			145		°C

RECOMMENDED OPERATING CONDITIONS (ELECTRICAL CHARACTERISTICS)

All of electronic equipment should be designed that the mounted semiconductor devices operate within the recommended operating conditions. The semiconductor devices cannot operate normally over the recommended operating conditions, even if when they are used over such conditions by momentary electronic noise or surge. And the semiconductor devices may receive serious damage when they continue to operate over the recommended operating conditions.

TYPICAL APPLICATION

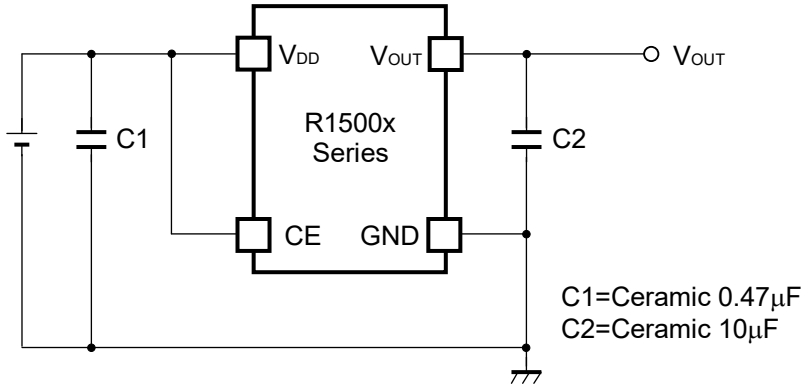

(External Components)
C2: Ceramic 10μF MURATA: GRM32DB31E106K (size: 3225)

TECHNICAL NOTES

When using these ICs, consider the following points:

Phase Compensation

In these ICs, phase compensation is made for securing stable operation even if the load current is varied. For this purpose, use a capacitor C2 with good frequency characteristics and ESR (Equivalent Series Resistance).

If you use a tantalum type capacitor and ESR value of the capacitor is large, output might be unstable. Evaluate your circuit with considering frequency characteristics.

Depending on the capacitor size, manufacturer, and part number, the bias characteristics and temperature characteristics are different. Evaluate the circuit with actual using capacitors.

PCB Layout

Make V_{DD} and GND lines sufficient. If their impedance is high, noise pickup or unstable operation may result. Connect a capacitor C1 with a capacitance value as much as 0.47μF or more between V_{DD} and GND pin, and as close as possible to the pins.

Set external components, especially the output capacitor C2, as close as possible to the ICs, and make wiring as short as possible.

No.2 pin and No.3 pin of SOT-89-5 and TO-252-5-P2 package must be wired to the GND plane when it is mounted on board.

Thermal Shutdown

There is the built-in thermal-shutdown function in R1500x series. It discontinues operation of the IC when the junction temperature becomes over 170°C (Typ.) and IC re-operates when the junction temperature under 145°C. If the temperature increasing keeps the IC repeats ON and OFF operating. The output becomes the pulse condition.

TYPICAL APPLICATION FOR PREVENTING IC DESTRUCTION

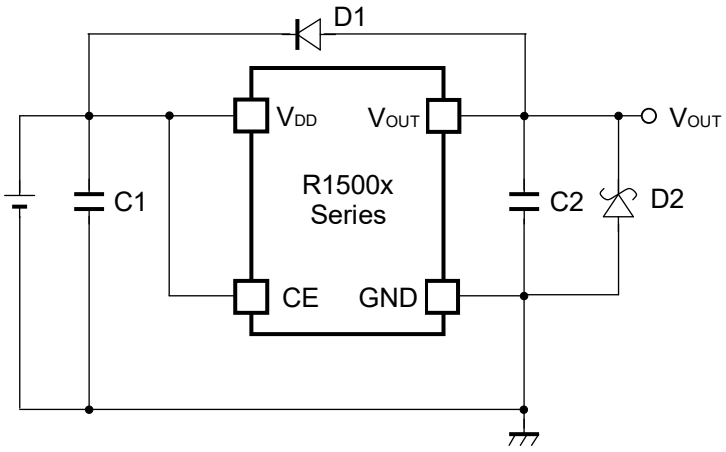

C1: 0.47μF or more (preventing for unstable operation)
C2: 10μF or more (preventing for unstable operation)

D1: If V_{OUT} pin could be higher than V_{IN} pin, D1 is necessary.
D2: If V_{OUT} pin could be lower than GND pin, SBD is necessary.

Note: Do not force the voltage to V_{OUT} pin.

TEST CIRCUITS

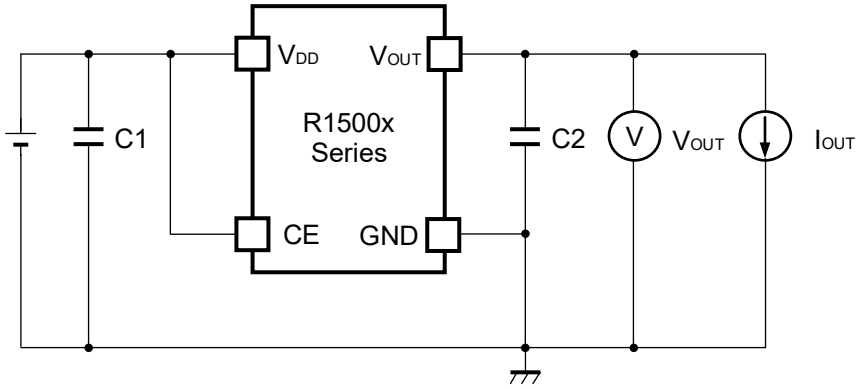

Basic Test Circuit

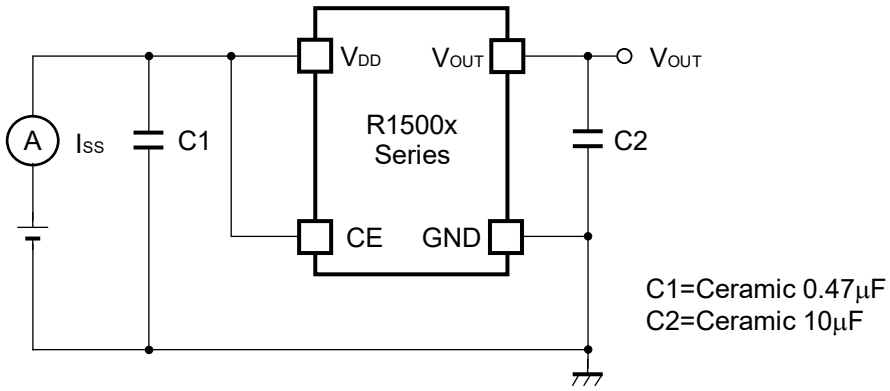

Test Circuit for Supply Current

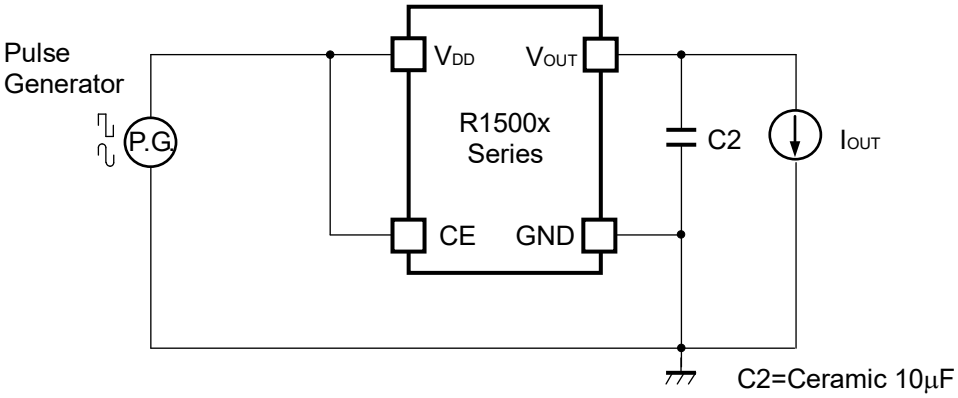

Test Circuit for Ripple Rejection, Input Transient Response

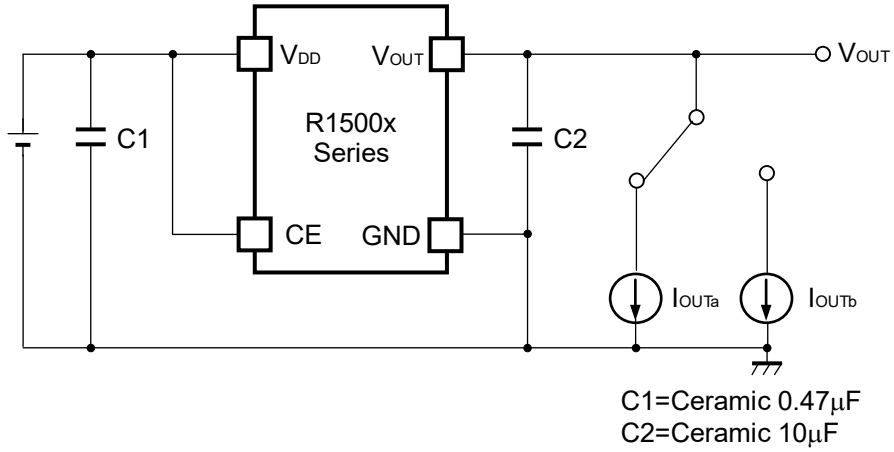

Test Circuit for Load Transient Response

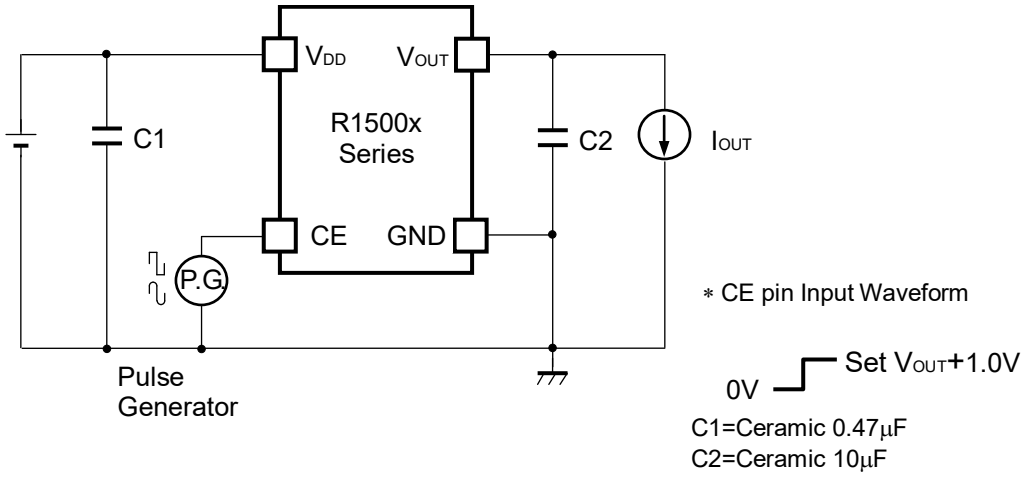

Test Circuit for Turn On Speed with CE pin

TYPICAL CHARACTERISTICS

1) Output Voltage vs. Output Current (C1=Ceramic 0.47µF, C2=Ceramic 10µF, Topt=25°C)

R1500x030B

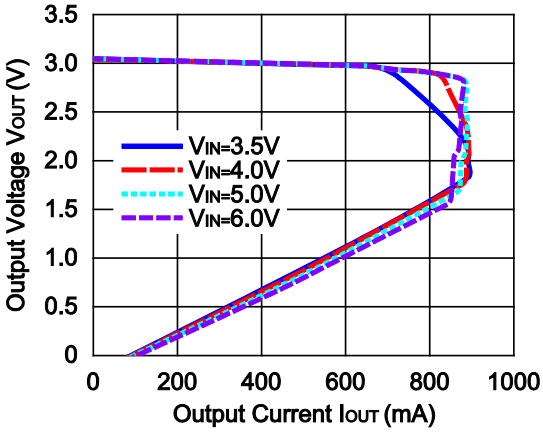

R1500x050B

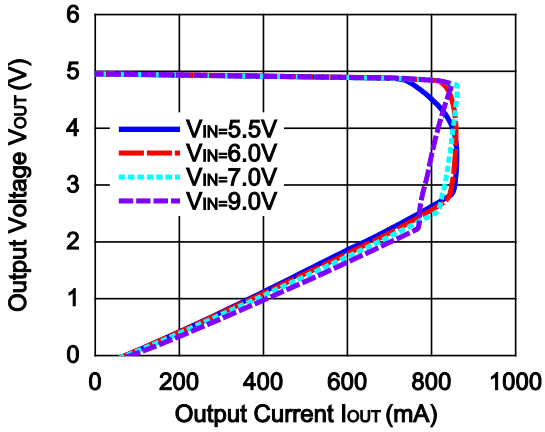

R1500x090B

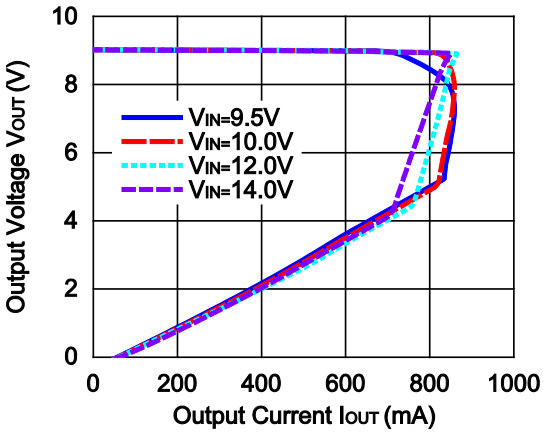

R1500x120B

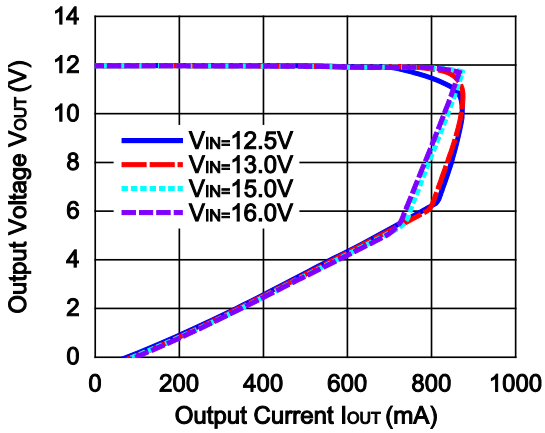

2) Output Voltage vs. Input Voltage (C1=Ceramic 0.47µF, C2=Ceramic 10µF, Topt=25°C)

R1500x030B

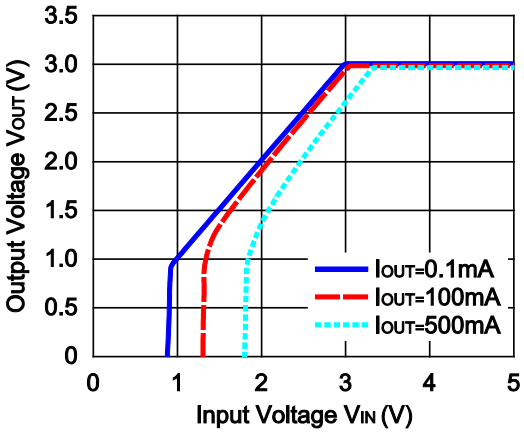

R1500x050B

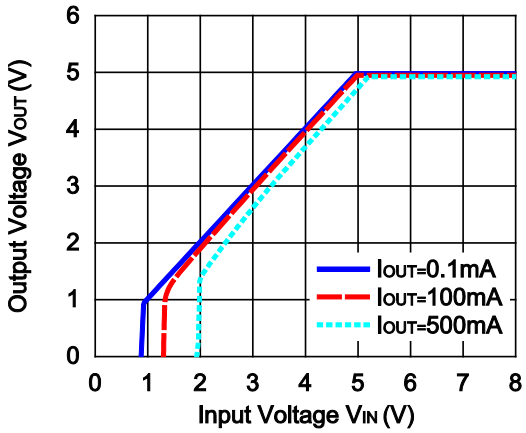

R1500x090B

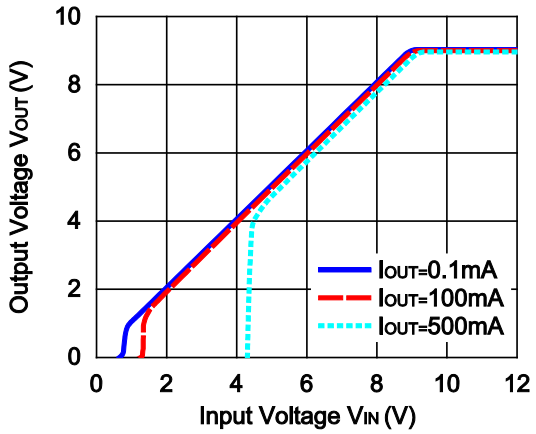

R1500x120B

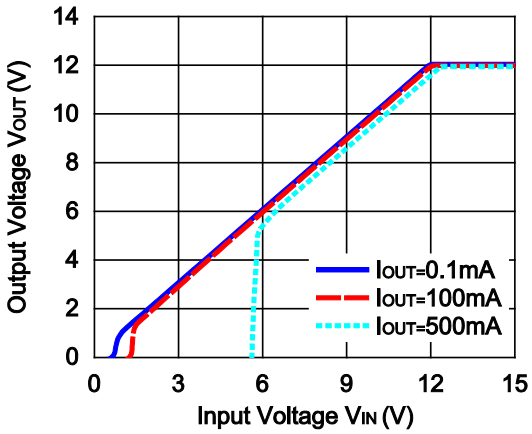

3) Supply Current vs. Input Voltage (C1=Ceramic 0.47µF, C2=Ceramic 10µF, Topt=25°C)

R1500x030B

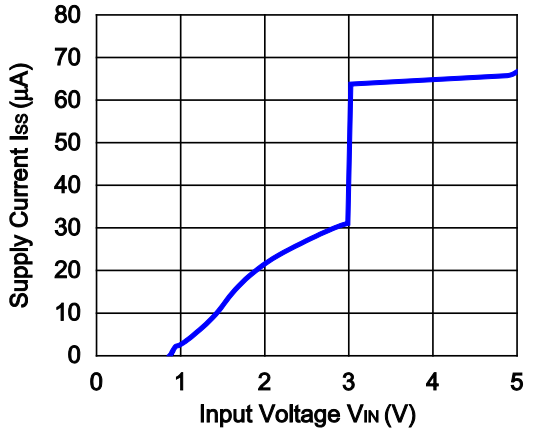

R1500x050B

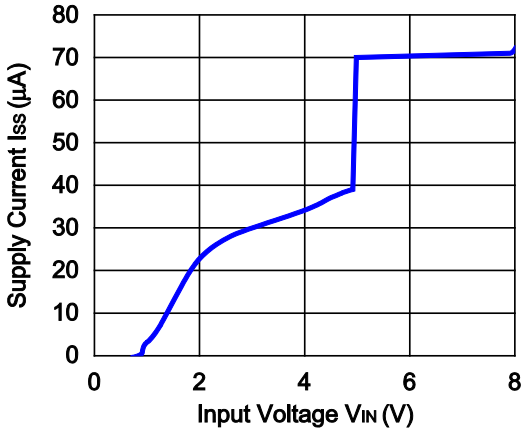

R1500x090B

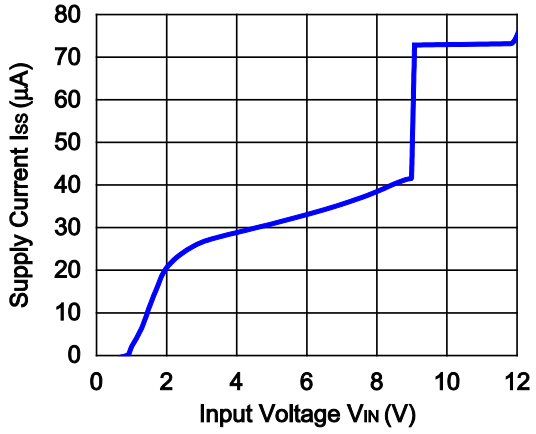

R1500x120B

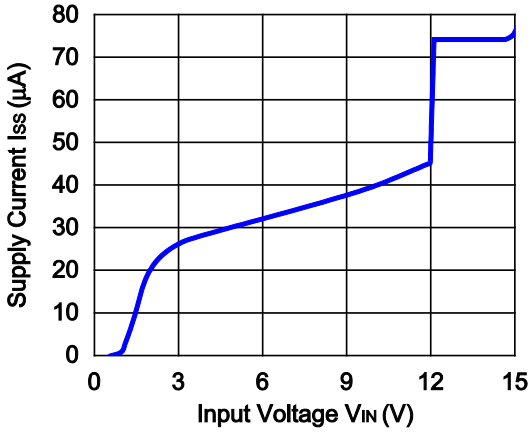

4) Output Voltage vs. Temperature (C1=Ceramic 0.47µF, C2=Ceramic 10µF, I_{OUT}=100mA)

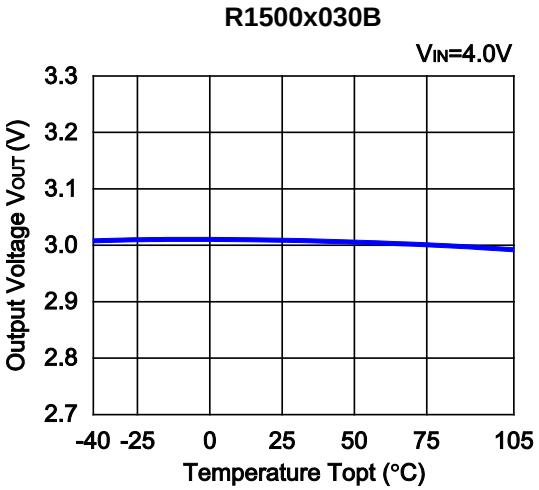

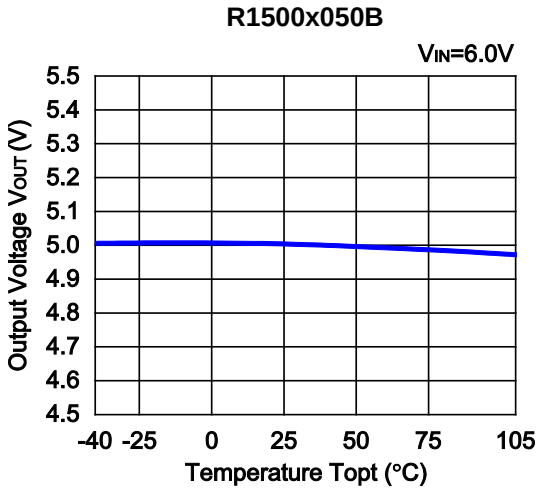

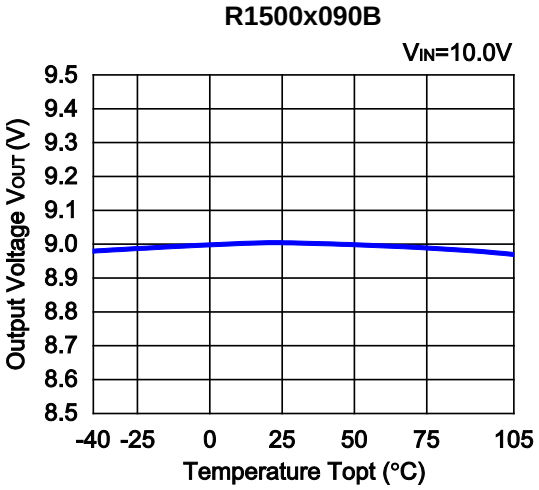

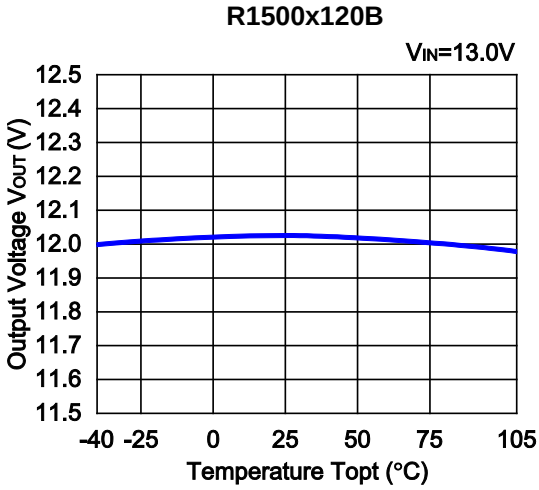

5) Supply Current vs. Temperature (C1=Ceramic 0.47µF, C2=Ceramic 10µF, I_{OUT}=0mA)

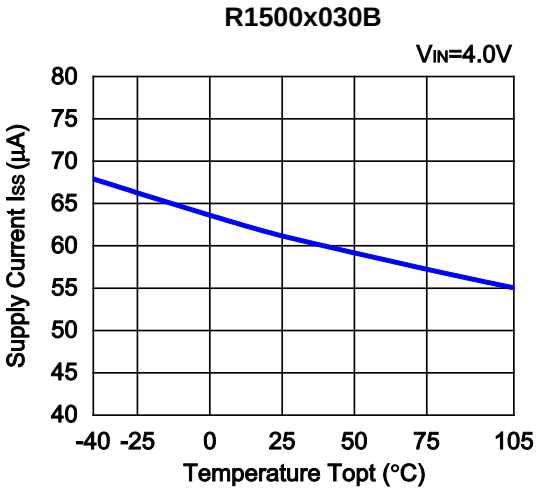

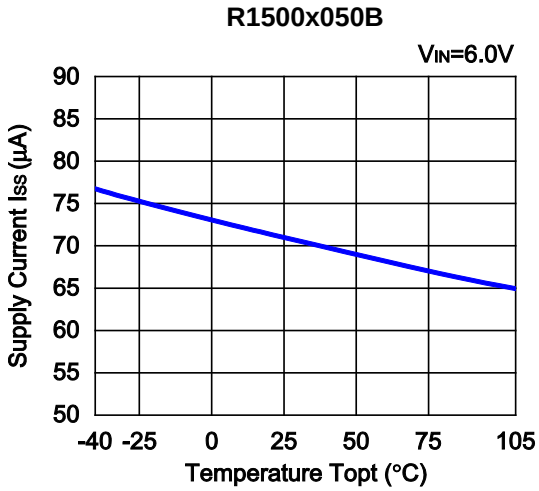

R1500x090B

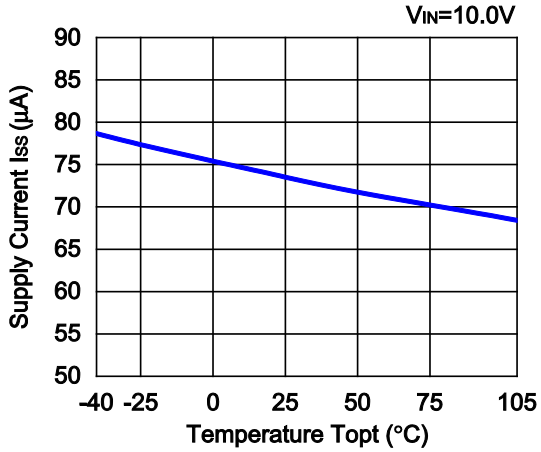

R1500x120B

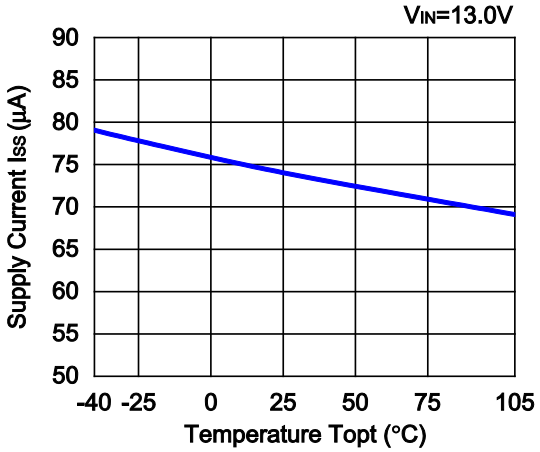

6) Dropout Voltage vs. Output Current (C1=Ceramic 0.47µF, C2=Ceramic 10µF)

R1500x030B

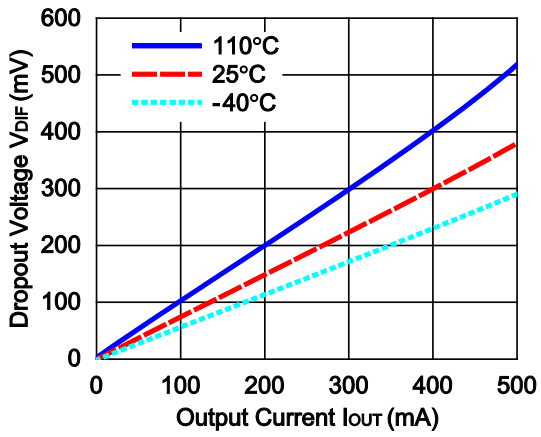

R1500x050B

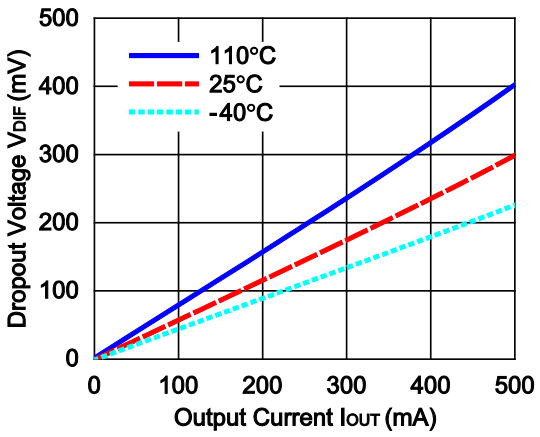

R1500x090B

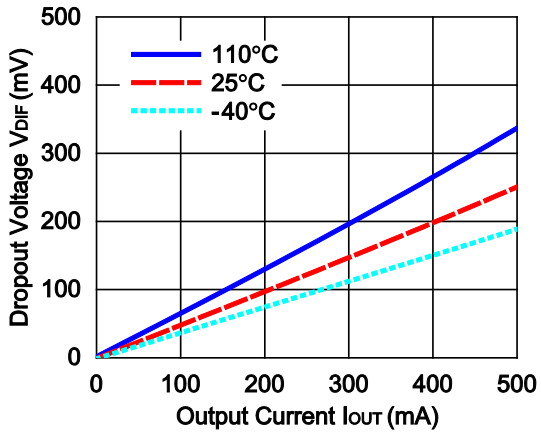

R1500x120B

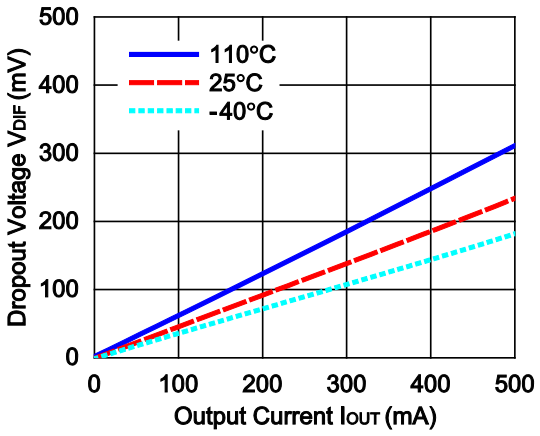

7) Dropout Voltage vs. Set Output Voltage (C1=Ceramic 0.47μF, C2=Ceramic 10μF, Topt=25°C)

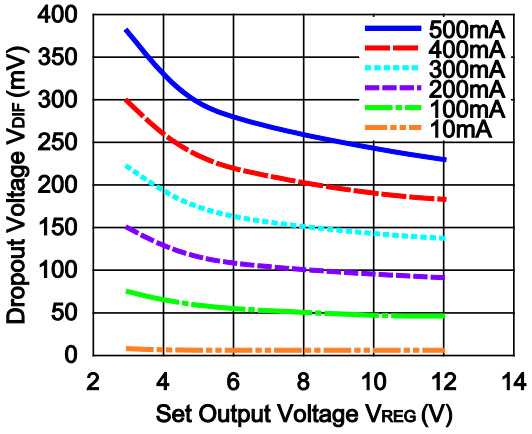

8) Ripple Rejection vs. Input Bias Voltage (C1=none, C2=Ceramic 10μF, IOUT=100mA, Topt=25°C)

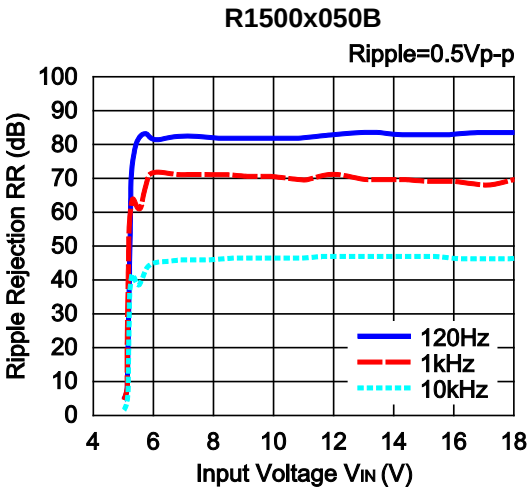

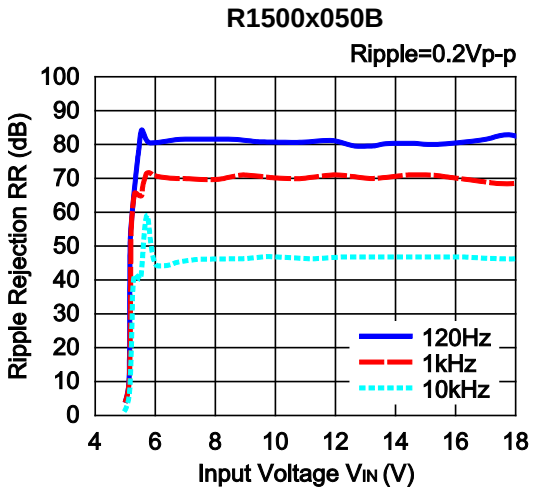

9) Ripple Rejection vs. Frequency (C1=none, C2=Ceramic 10μF, Ripple=0.5Vp-p)

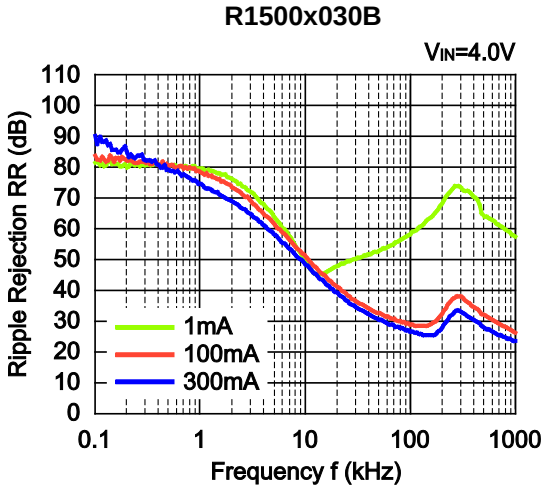

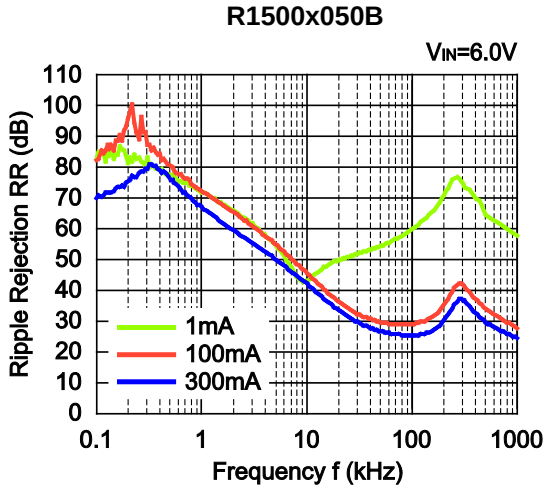

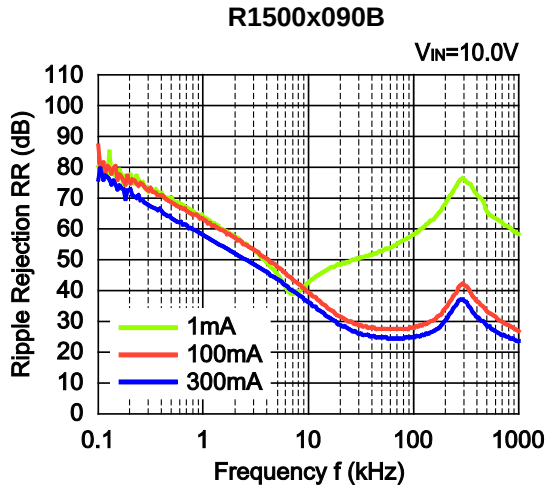

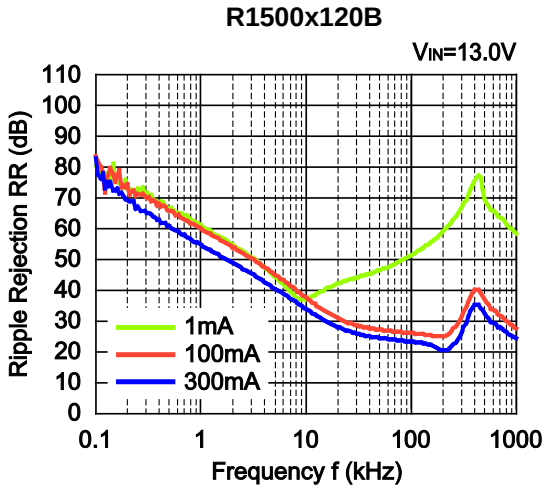

10) Input Transient Response (C1=none, C2=Ceramic 10µF, IOUT=100mA, tr=tf=10µs, Topt=25°C)

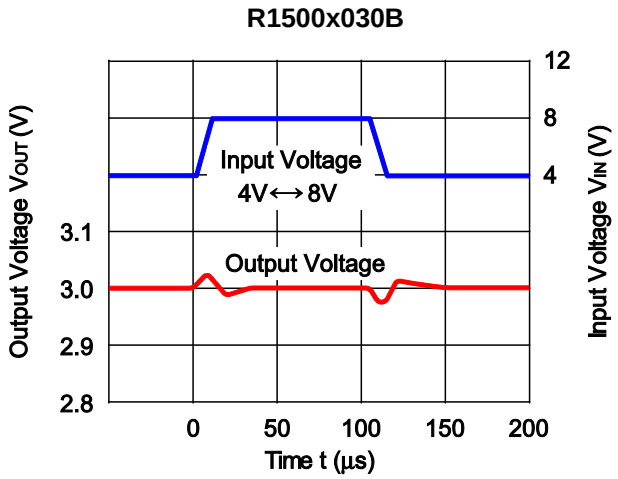

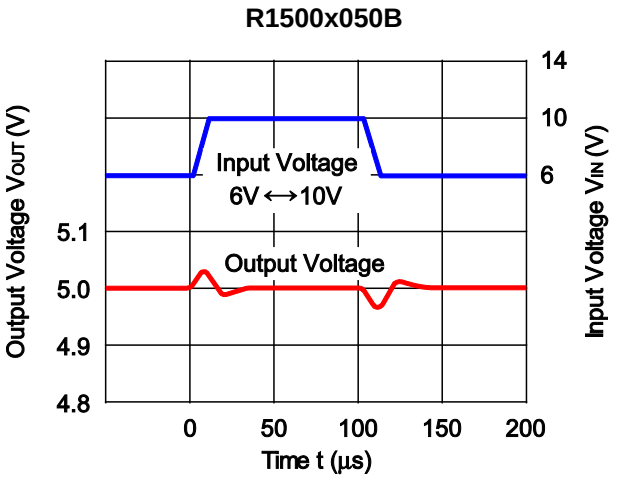

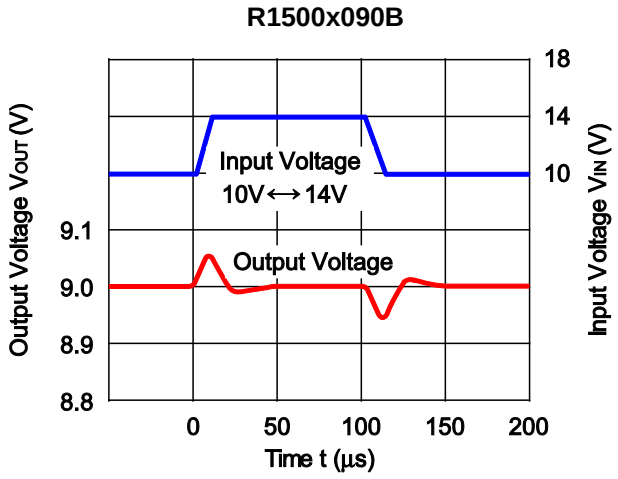

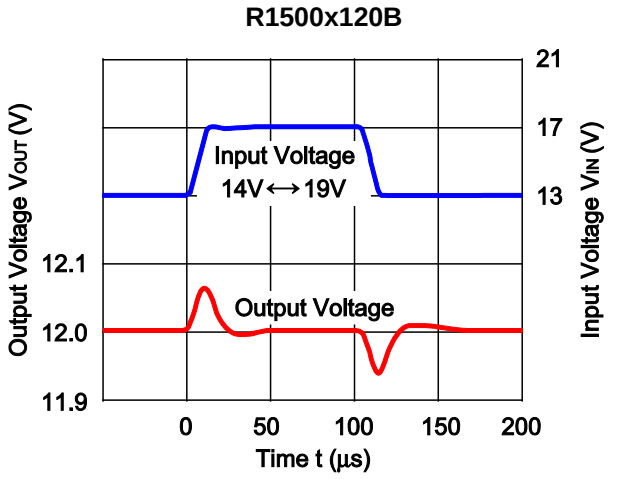

11) Load Transient Response (C1=Ceramic 0.47µF, C2=Ceramic 10µF, tr=tf=0.5µs, Topt=25°C)

R1500x030B

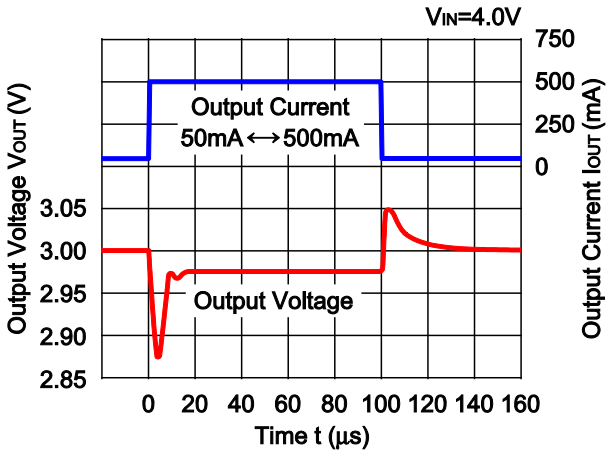

R1500x050B

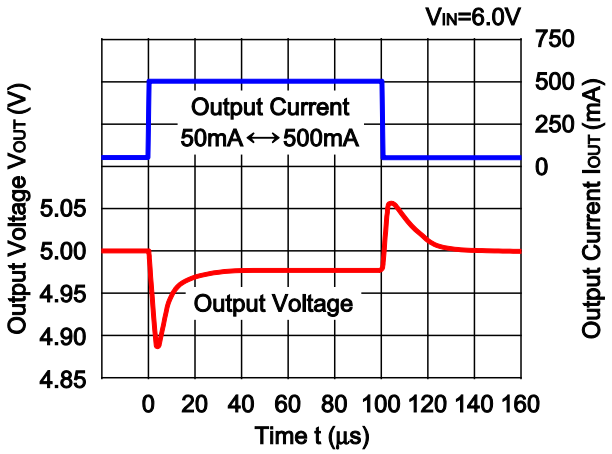

R1500x090B

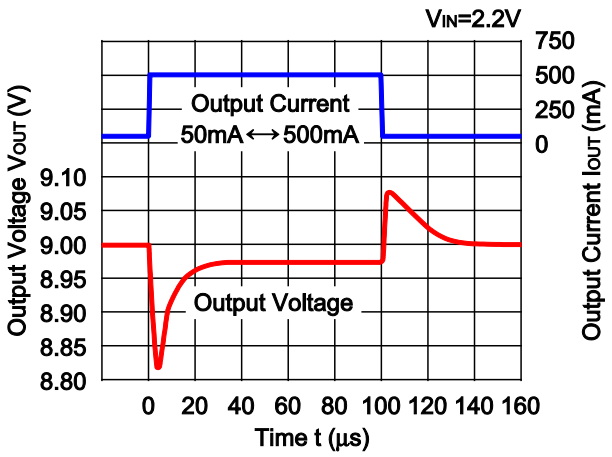

R1500x120B

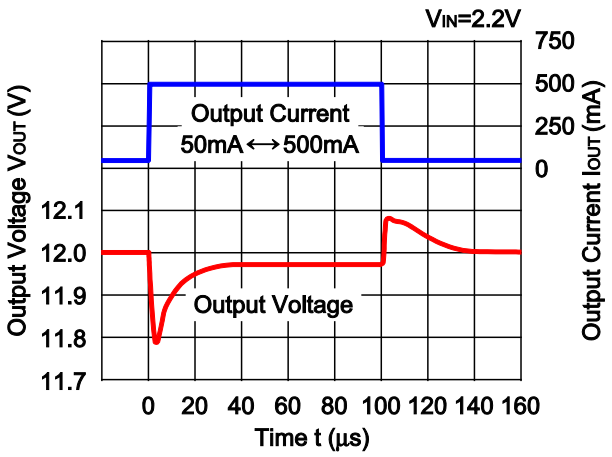

12) Turn On Speed with CE pin (C1=Ceramic 0.47µF, C2=Ceramic 10µF, Topt=25°C)

R1500x030B

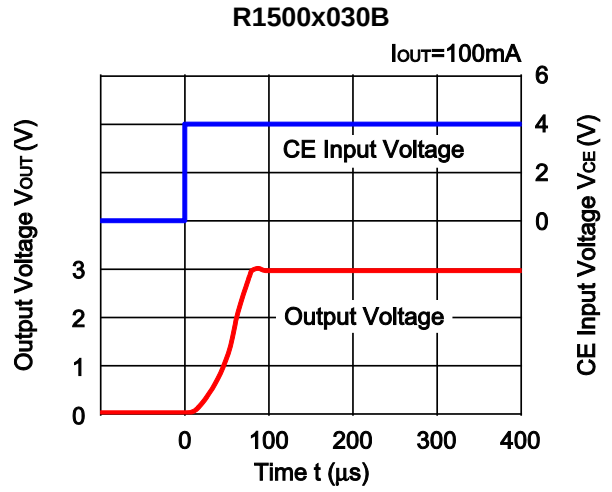

R1500x030B

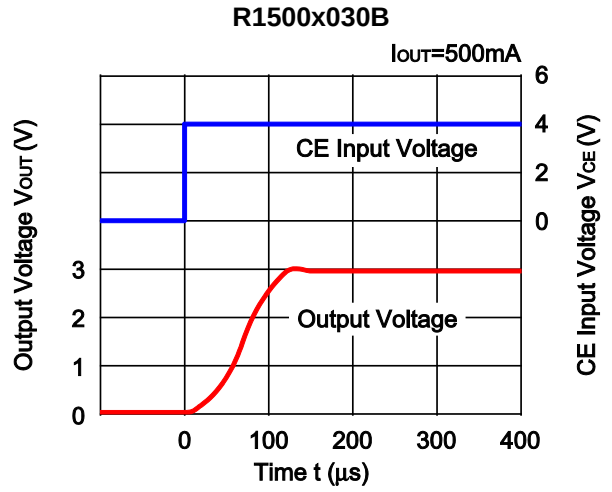

R1500x050B

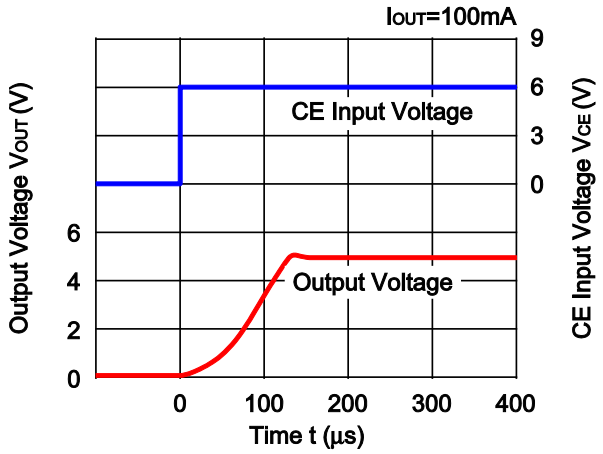

R1500x050B

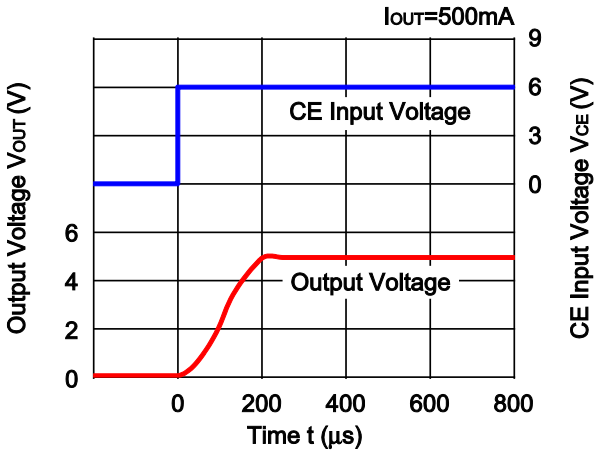

R1500x090B

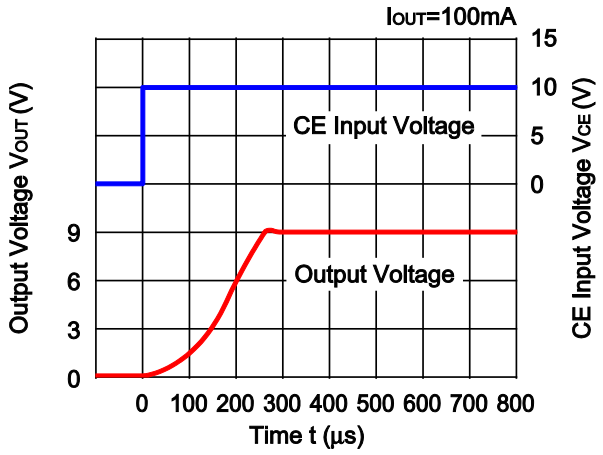

R1500x090B

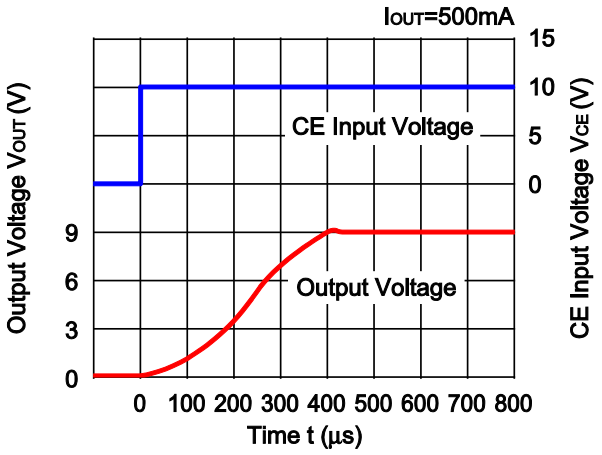

R1500x120B

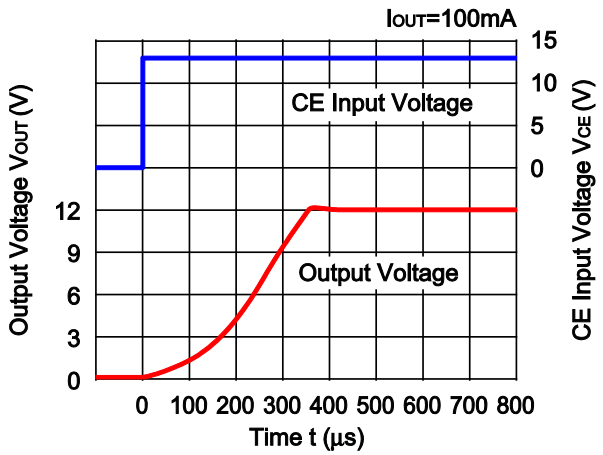

R1500x120B

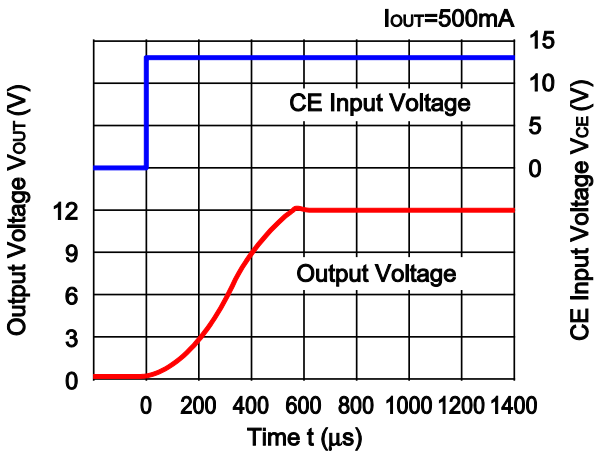

13) Turn Off Speed with CE (C1=Ceramic 0.47µF, C2=Ceramic 10µF, I_{OUT}=500mA, Topt=25°C)

R1500x030B

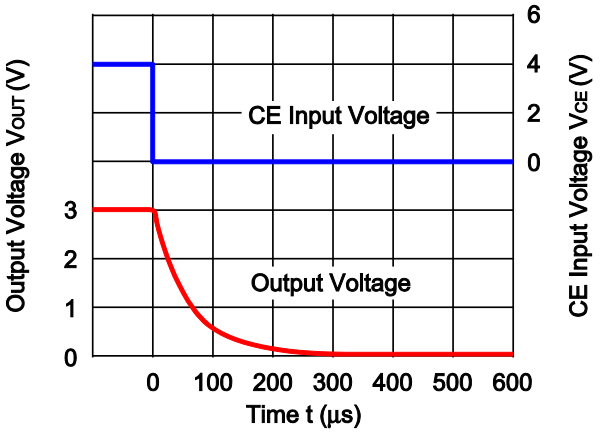

R1500x050B

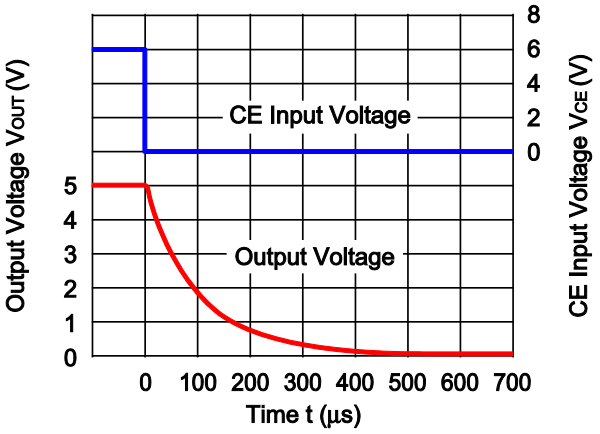

R1500x090B

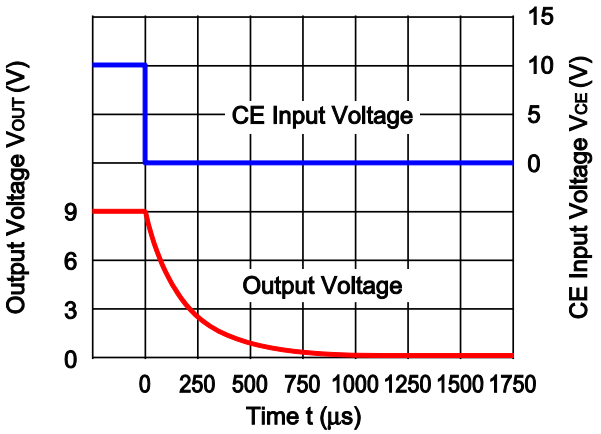

R1500x120B

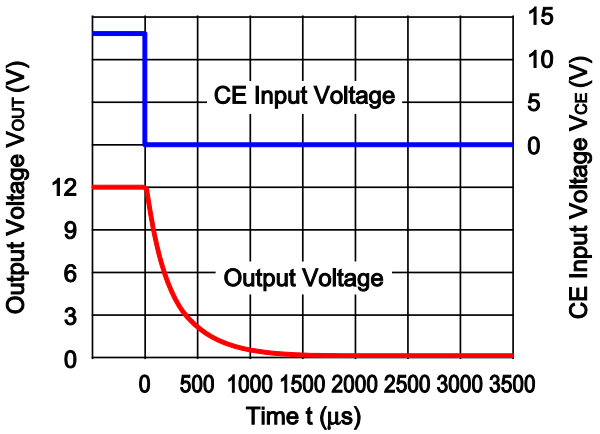

ESR vs. Output Current

The relations between I_{OUT} (Output Current) and ESR of an output capacitor are shown below.
The conditions when the white noise level is under the specified certain level are marked as the hatched area in the graph.

Measurement conditions

Input Voltage : V_{OUT} +1V
Frequency Band : 10Hz to 1MHz
Temperature : –40°C to 105°C

R1500x030B

Noise level=40μVrms

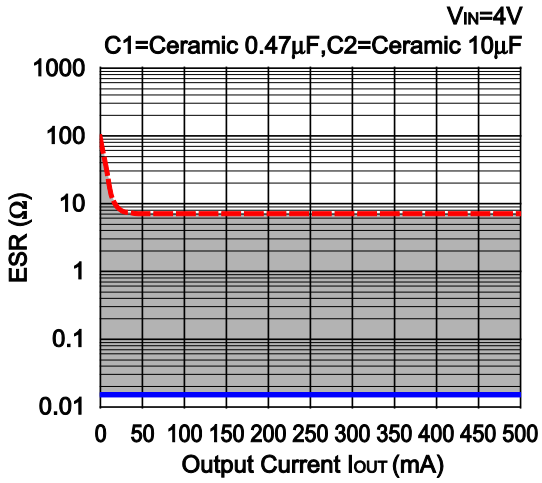

R1500x030B

Noise level=40μVrms

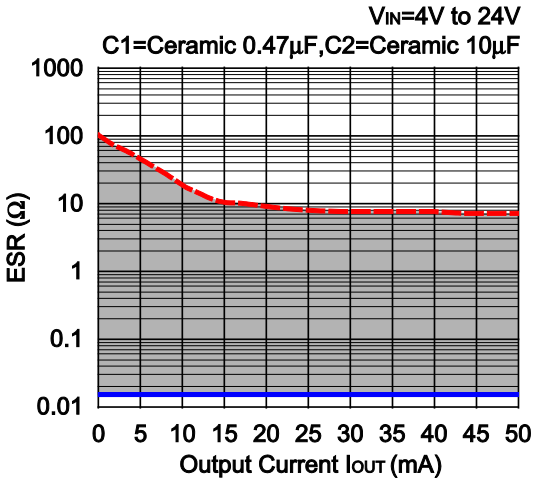

R1500x050B

Noise level=50μVrms

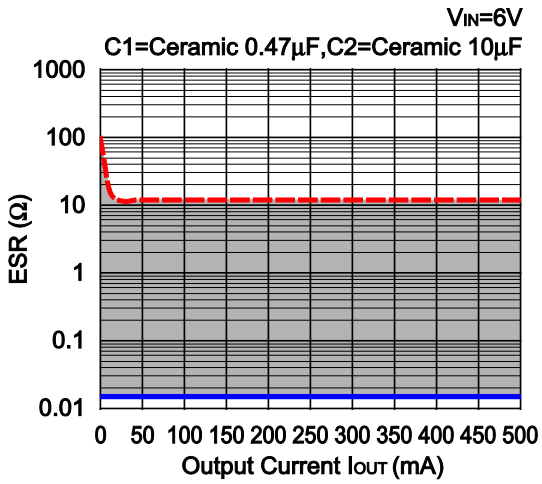

R1500x050B

Noise level=50μVrms

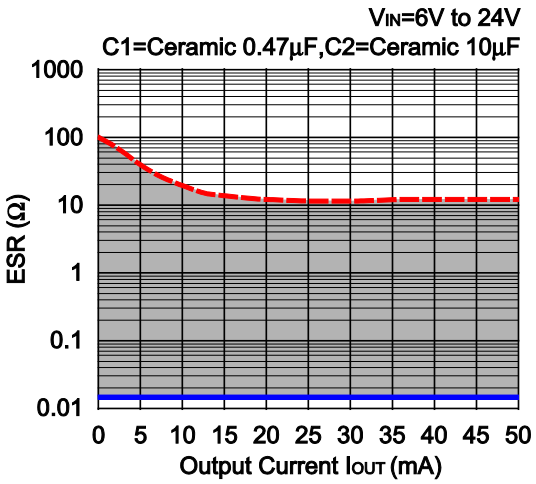

R1500x090B

Noise level＝

V_{IN}=10V

C1=Ceramic 0.47µF,C2=Ceramic 10µF

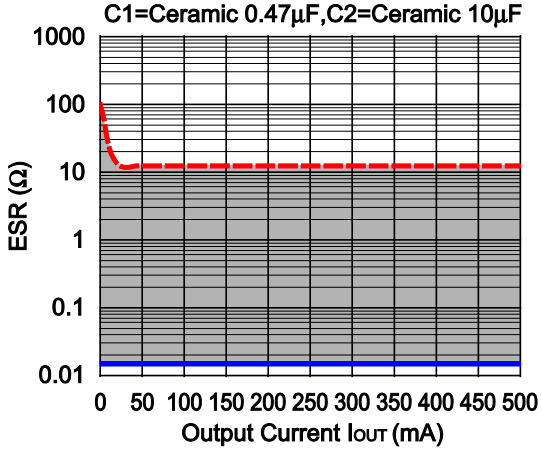

R1500x090B

Noise level＝120µVrms

V_{IN}=10V to 24V

C1=Ceramic 0.47µF,C2=Ceramic 10µF

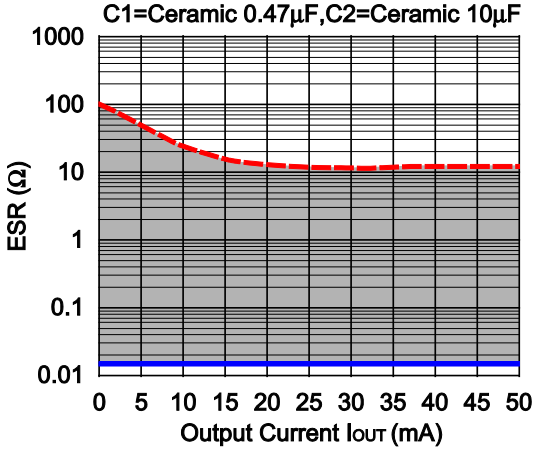

R1500x120B

Noise level＝140µVrms

V_{IN}=13V

C1=Ceramic 0.47µF,C2=Ceramic 10µF

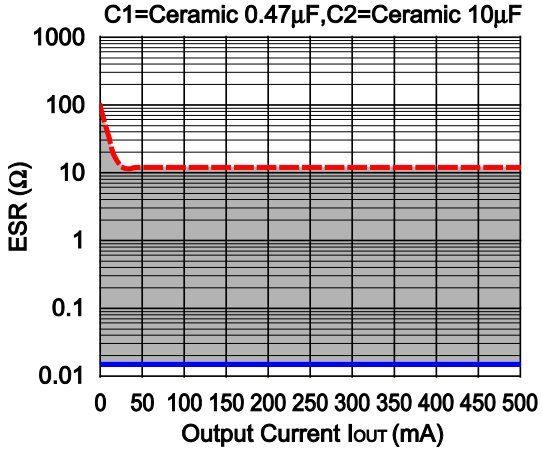

R1500x120B

Noise level＝140µVrms

V_{IN}=13V to 24V

C1=Ceramic 0.47µF,C2=Ceramic 10µF

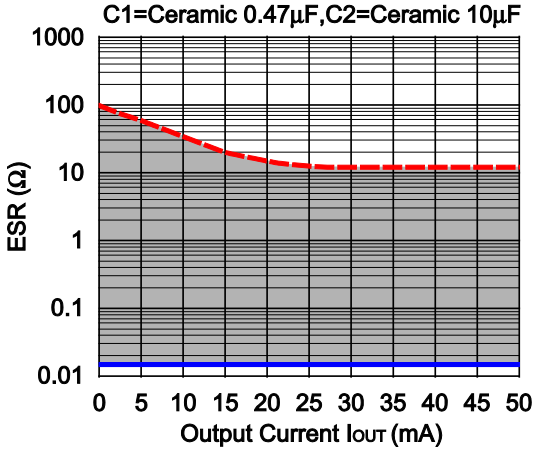

PACKAGE INFORMATION

Power Dissipation (SOT-89-5)

Power Dissipation (P_D) depends on conditions of mounting on board. This specification is based on the measurement at the condition below:

Measurement Conditions

	High Wattage Land Pattern	Standard Land Pattern
Environment	Mounting on Board (Wind velocity=0m/s)	Mounting on Board (Wind velocity=0m/s)
Board Material	Glass cloth epoxy plastic (Double sided)	Glass cloth epoxy plastic (Double sided)
Board Dimensions	30mm × 30mm × 1.6mm	50mm × 50mm × 1.6mm
Copper Ratio	Top side : Approx. 20% , Back side : Approx. 100%	Top side : Approx. 10% , Back side : Approx. 100%
Through-hole	ϕ0.85mm × 10pcs	-

Measurement Result (Ta=25°C, Tjmax=125°C)

	High Wattage Land Pattern	Standard Land Pattern	Free Air
Power Dissipation	1300mW	900mW	500mW
Thermal Resistance	77°C/W	111°C/W	200°C/W

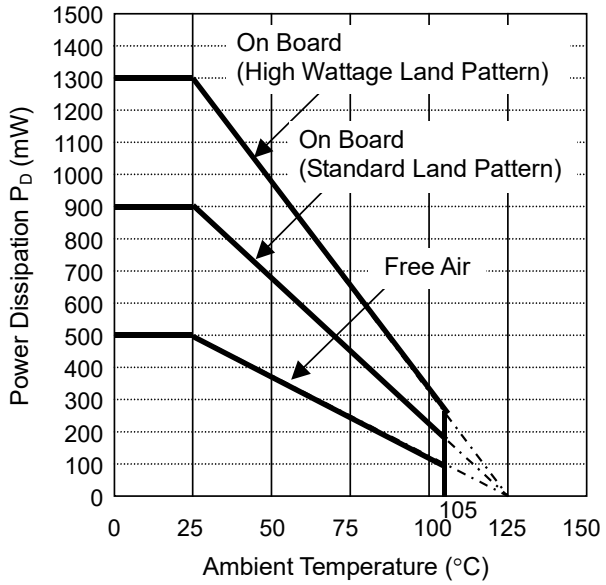

Power Dissipation

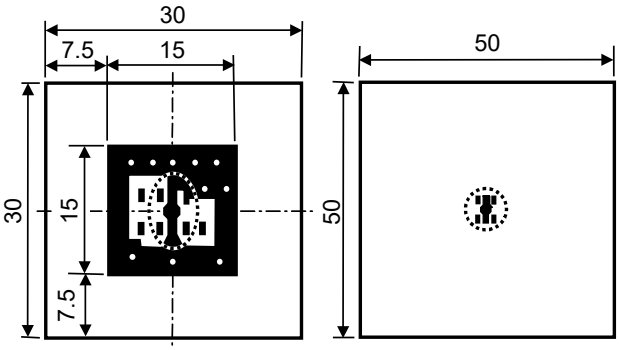

Measurement Board Pattern

IC Mount Area (Unit : mm)

Package Dimensions (SOT-89-5)

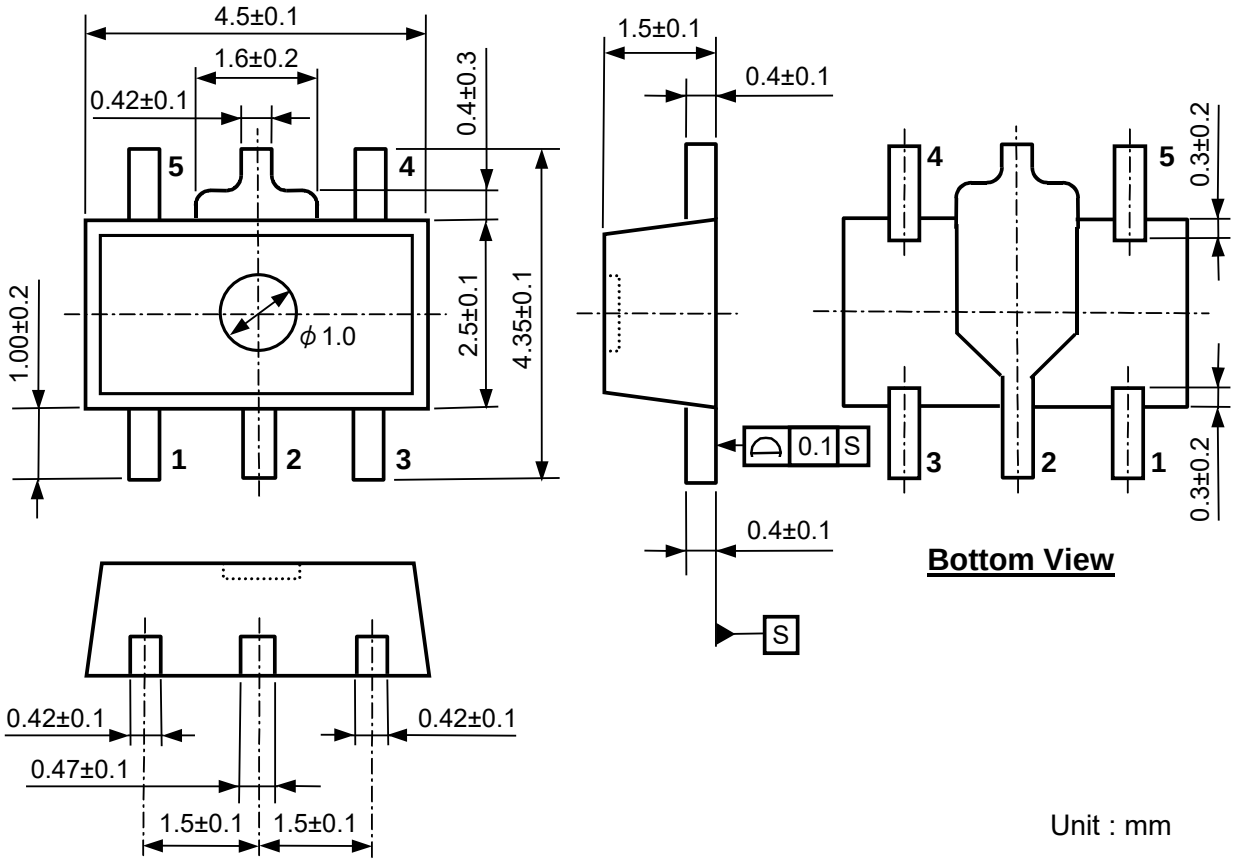

Unit : mm

Mark Specifications (SOT-89-5)

①②③④ : Product Code.....Refer to the mark list table.

⑤⑥ : Lot No. .....Alphanumeric serial number.

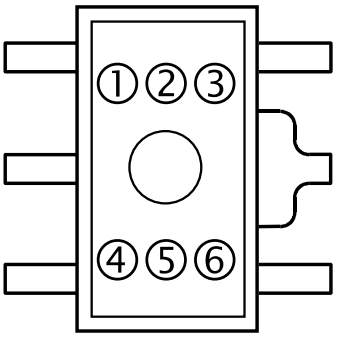

R1500H Series marking list table

PKG : SOT-89-5

Product Name	①②③④	Vset
R1500H030B	**R 0 3 0**	3.0V
R1500H031B	**R 0 3 1**	3.1V
R1500H032B	**R 0 3 2**	3.2V
R1500H033B	**R 0 3 3**	3.3V
R1500H034B	**R 0 3 4**	3.4V
R1500H035B	**R 0 3 5**	3.5V
R1500H036B	**R 0 3 6**	3.6V
R1500H037B	**R 0 3 7**	3.7V
R1500H038B	**R 0 3 8**	3.8V
R1500H039B	**R 0 3 9**	3.9V
R1500H040B	**R 0 4 0**	4.0V
R1500H041B	**R 0 4 1**	4.1V
R1500H042B	**R 0 4 2**	4.2V
R1500H043B	**R 0 4 3**	4.3V
R1500H044B	**R 0 4 4**	4.4V
R1500H045B	**R 0 4 5**	4.5V
R1500H046B	**R 0 4 6**	4.6V
R1500H047B	**R 0 4 7**	4.7V
R1500H048B	**R 0 4 8**	4.8V
R1500H049B	**R 0 4 9**	4.9V
R1500H050B	**R 0 5 0**	5.0V
R1500H051B	**R 0 5 1**	5.1V
R1500H052B	**R 0 5 2**	5.2V
R1500H053B	**R 0 5 3**	5.3V
R1500H054B	**R 0 5 4**	5.4V
R1500H055B	**R 0 5 5**	5.5V
R1500H056B	**R 0 5 6**	5.6V
R1500H057B	**R 0 5 7**	5.7V
R1500H058B	**R 0 5 8**	5.8V
R1500H059B	**R 0 5 9**	5.9V

Product Name	①②③④	Vset
R1500H060B	**R 0 6 0**	6.0V
R1500H061B	**R 0 6 1**	6.1V
R1500H062B	**R 0 6 2**	6.2V
R1500H063B	**R 0 6 3**	6.3V
R1500H064B	**R 0 6 4**	6.4V
R1500H065B	**R 0 3 5**	6.5V
R1500H066B	**R 0 6 6**	6.6V
R1500H067B	**R 0 6 7**	6.7V
R1500H068B	**R 0 6 8**	6.8V
R1500H069B	**R 0 6 9**	6.9V
R1500H070B	**R 0 7 0**	7.0V
R1500H071B	**R 0 7 1**	7.1V
R1500H072B	**R 0 7 2**	7.2V
R1500H073B	**R 0 7 3**	7.3V
R1500H074B	**R 0 7 4**	7.4V
R1500H075B	**R 0 7 5**	7.5V
R1500H076B	**R 0 7 6**	7.6V
R1500H077B	**R 0 7 7**	7.7V
R1500H078B	**R 0 7 8**	7.8V
R1500H079B	**R 0 7 9**	7.9V
R1500H080B	**R 0 8 0**	8.0V
R1500H081B	**R 0 8 1**	8.1V
R1500H082B	**R 0 8 2**	8.2V
R1500H083B	**R 0 8 3**	8.3V
R1500H084B	**R 0 8 4**	8.4V
R1500H085B	**R 0 8 5**	8.5V
R1500H086B	**R 0 8 6**	8.6V
R1500H087B	**R 0 8 7**	8.7V
R1500H088B	**R 0 8 8**	8.8V
R1500H089B	**R 0 8 9**	8.9V

Product Name	①②③④	Vset
R1500H090B	**R 0 9 0**	9.0V
R1500H091B	**R 0 9 1**	9.1V
R1500H092B	**R 0 9 2**	9.2V
R1500H093B	**R 0 9 3**	9.3V
R1500H094B	**R 0 9 4**	9.4V
R1500H095B	**R 0 9 5**	9.5V
R1500H096B	**R 0 9 6**	9.6V
R1500H097B	**R 0 9 7**	9.7V
R1500H098B	**R 0 9 8**	9.8V
R1500H099B	**R 0 9 9**	9.9V
R1500H100B	**R 1 0 0**	10.0V
R1500H101B	**R 1 0 1**	10.1V
R1500H102B	**R 1 0 2**	10.2V
R1500H103B	**R 1 0 3**	10.3V
R1500H104B	**R 1 0 4**	10.4V
R1500H105B	**R 1 0 5**	10.5V
R1500H106B	**R 1 0 6**	10.6V
R1500H107B	**R 1 0 7**	10.7V
R1500H108B	**R 1 0 8**	10.8V
R1500H109B	**R 1 0 9**	10.9V
R1500H110B	**R 1 1 0**	11.0V
R1500H111B	**R 1 1 1**	11.1V
R1500H112B	**R 1 1 2**	11.2V
R1500H113B	**R 1 1 3**	11.3V
R1500H114B	**R 1 1 4**	11.4V
R1500H115B	**R 1 1 5**	11.5V
R1500H116B	**R 1 1 6**	11.6V
R1500H117B	**R 1 1 7**	11.7V
R1500H118B	**R 1 1 8**	11.8V
R1500H119B	**R 1 1 9**	11.9V
R1500H120B	**R 1 2 0**	12.0V

Power Dissipation (TO-252-5-P2)

Power Dissipation (P_D) depends on conditions of mounting on board.
This specification is based on the measurement at the condition below.

* Measurement conditions

	Standard Land Pattern	Ultra High Wattage Land Pattern
Environment	Mounting on board (Wind velocity 0m/s)	
Board Material	Glass cloth epoxy plastic (Double layers)	Glass cloth epoxy plastic (Four-layers)
Board Dimensions	50mm x 50mm x 1.6mm	76.2mm x 114.3mm x 0.8mm
Copper Ratio	Top side: Approx. 50%, Back side: Approx. 50%	Top, Back side:50mmSquare Approx. 96%, 2nd, 3rd: 50mmSquare Approx. 100%
Through - hole	ϕ 0.5mm x 24pcs	ϕ 0.4mm x 30pcs

* Measurement Results (Ta=25°C, Tjmax=125°C)

	Standard Land Pattern	Ultra High Wattage Land Pattern
Power Dissipation	1900mW	3800mW
Thermal Resistance	θja=(125-25°C)/1.9W= 53°C/W	θja= (125-25°C)/3.8W = 26°C/W
	θjc= 17°C/W	θjc= 7°C/W

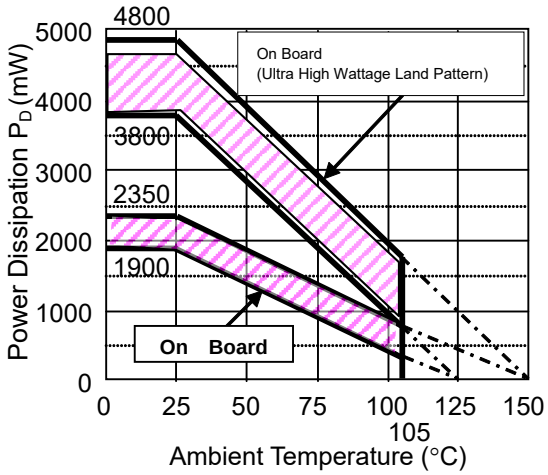

Power Dissipation

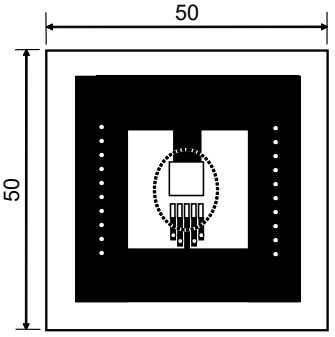

Standard

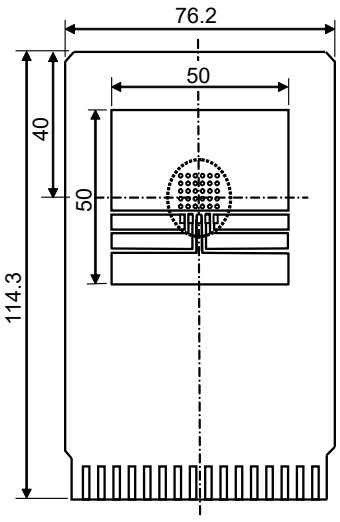

Ultra High Wattage

Measurement Board Pattern

IC Mount Area (Unit: mm)

The above graph shows the Power Dissipation of the package based on Tjmax=125°C and Tjmax=150°C.
Operating the IC in the shaded area in the graph might have an influence its lifetime. Operating time must be within the time limit described in the table below, in case of operating in the shaded area.

Operating Time	Estimated years (Operating four hours/day)
13,000 hours	9 years

Package Dimensions (TO-252-5-P2)

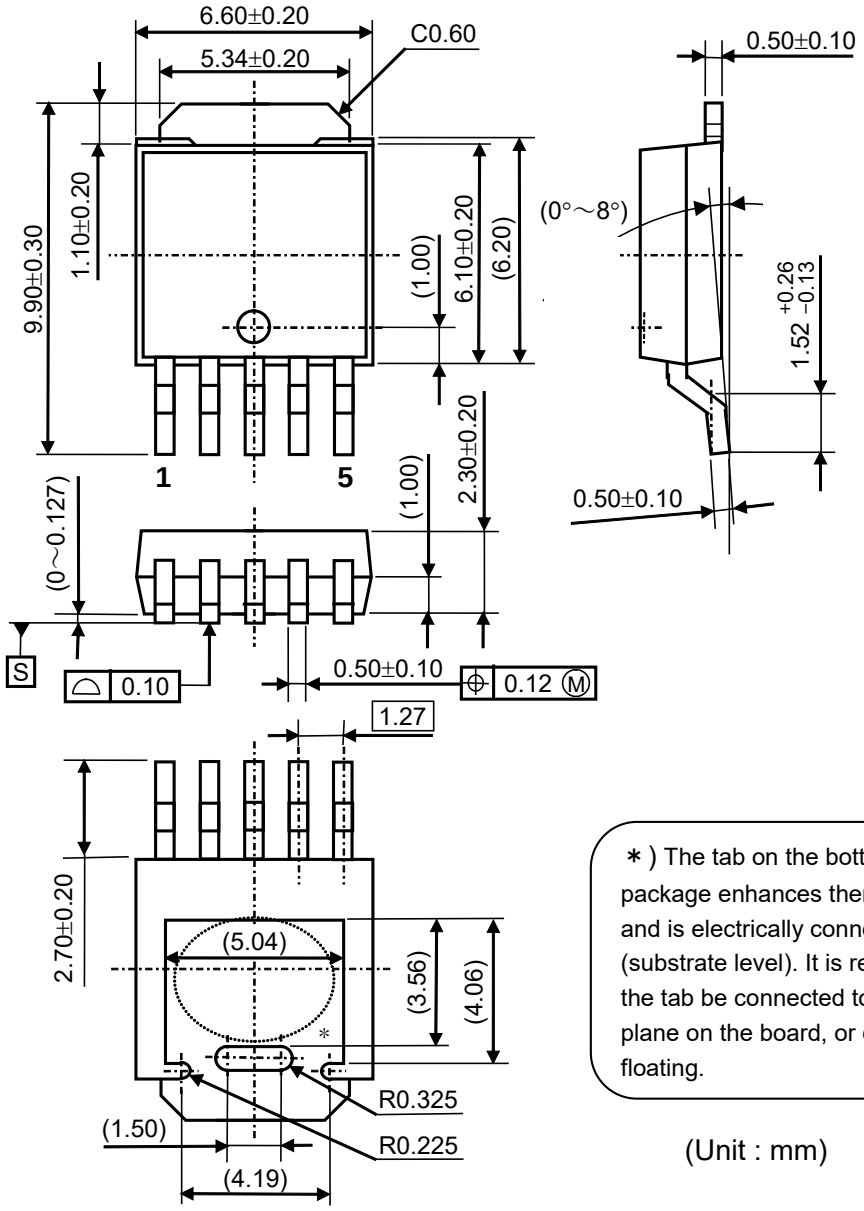

∗) The tab on the bottom of the package enhances thermal performance and is electrically connected to GND (substrate level). It is recommended that the tab be connected to the ground plane on the board, or otherwise be left floating.

(Unit : mm)

Mark Specification (TO-252-5-P2)

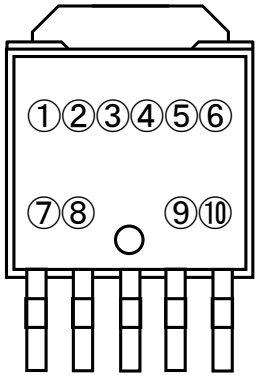

①②③④⑤⑥⑦ : Product Code …Refer to the mark list table.

⑧ : Blank

⑨⑩ : Lot Number … Alphanumeric Serial Number

R1500J Series marking list table

PKG : TO-252-5-P2

Product Name	①②③④⑤⑥⑦	Vset
R1500J030B	C 1 J 0 3 0 B	3.0V
R1500J031B	C 1 J 0 3 1 B	3.1V
R1500J032B	C 1 J 0 3 2 B	3.2V
R1500J033B	C 1 J 0 3 3 B	3.3V
R1500J034B	C 1 J 0 3 4 B	3.4V
R1500J035B	C 1 J 0 3 5 B	3.5V
R1500J036B	C 1 J 0 3 6 B	3.6V
R1500J037B	C 1 J 0 3 7 B	3.7V
R1500J038B	C 1 J 0 3 8 B	3.8V
R1500J039B	C 1 J 0 3 9 B	3.9V
R1500J040B	C 1 J 0 4 0 B	4.0V
R1500J041B	C 1 J 0 4 1 B	4.1V
R1500J042B	C 1 J 0 4 2 B	4.2V
R1500J043B	C 1 J 0 4 3 B	4.3V
R1500J044B	C 1 J 0 4 4 B	4.4V
R1500J045B	C 1 J 0 4 5 B	4.5V
R1500J046B	C 1 J 0 4 6 B	4.6V
R1500J047B	C 1 J 0 4 7 B	4.7V
R1500J048B	C 1 J 0 4 8 B	4.8V
R1500J049B	C 1 J 0 4 9 B	4.9V
R1500J050B	C 1 J 0 5 0 B	5.0V
R1500J051B	C 1 J 0 5 1 B	5.1V
R1500J052B	C 1 J 0 5 2 B	5.2V
R1500J053B	C 1 J 0 5 3 B	5.3V
R1500J054B	C 1 J 0 5 4 B	5.4V
R1500J055B	C 1 J 0 5 5 B	5.5V
R1500J056B	C 1 J 0 5 6 B	5.6V
R1500J057B	C 1 J 0 5 7 B	5.7V
R1500J058B	C 1 J 0 5 8 B	5.8V
R1500J059B	C 1 J 0 5 9 B	5.9V

Product Name	①②③④⑤⑥⑦	Vset
R1500J060B	C 1 J 0 6 0 B	6.0V
R1500J061B	C 1 J 0 6 1 B	6.1V
R1500J062B	C 1 J 0 6 2 B	6.2V
R1500J063B	C 1 J 0 6 3 B	6.3V
R1500J064B	C 1 J 0 6 4 B	6.4V
R1500J065B	C 1 J 0 6 5 B	6.5V
R1500J066B	C 1 J 0 6 6 B	6.6V
R1500J067B	C 1 J 0 6 7 B	6.7V
R1500J068B	C 1 J 0 6 8 B	6.8V
R1500J069B	C 1 J 0 6 9 B	6.9V
R1500J070B	C 1 J 0 7 0 B	7.0V
R1500J071B	C 1 J 0 7 1 B	7.1V
R1500J072B	C 1 J 0 7 2 B	7.2V
R1500J073B	C 1 J 0 7 3 B	7.3V
R1500J074B	C 1 J 0 7 4 B	7.4V
R1500J075B	C 1 J 0 7 5 B	7.5V
R1500J076B	C 1 J 0 7 6 B	7.6V
R1500J077B	C 1 J 0 7 7 B	7.7V
R1500J078B	C 1 J 0 7 8 B	7.8V
R1500J079B	C 1 J 0 7 9 B	7.9V
R1500J080B	C 1 J 0 8 0 B	8.0V
R1500J081B	C 1 J 0 8 1 B	8.1V
R1500J082B	C 1 J 0 8 2 B	8.2V
R1500J083B	C 1 J 0 8 3 B	8.3V
R1500J084B	C 1 J 0 8 4 B	8.4V
R1500J085B	C 1 J 0 8 5 B	8.5V
R1500J086B	C 1 J 0 8 6 B	8.6V
R1500J087B	C 1 J 0 8 7 B	8.7V
R1500J088B	C 1 J 0 8 8 B	8.8V
R1500J089B	C 1 J 0 8 9 B	8.9V

Product Name	①②③④⑤⑥⑦	Vset
R1500J090B	C 1 J 0 9 0 B	9.0V
R1500J091B	C 1 J 0 9 1 B	9.1V
R1500J092B	C 1 J 0 9 2 B	9.2V
R1500J093B	C 1 J 0 9 3 B	9.3V
R1500J094B	C 1 J 0 9 4 B	9.4V
R1500J095B	C 1 J 0 9 5 B	9.5V
R1500J096B	C 1 J 0 9 6 B	9.6V
R1500J097B	C 1 J 0 9 7 B	9.7V
R1500J098B	C 1 J 0 9 8 B	9.8V
R1500J099B	C 1 J 0 9 9 B	9.9V
R1500J100B	C 1 J 1 0 0 B	10.0V
R1500J101B	C 1 J 1 0 1 B	10.1V
R1500J102B	C 1 J 1 0 2 B	10.2V
R1500J103B	C 1 J 1 0 3 B	10.3V
R1500J104B	C 1 J 1 0 4 B	10.4V
R1500J105B	C 1 J 1 0 5 B	10.5V
R1500J106B	C 1 J 1 0 6 B	10.6V
R1500J107B	C 1 J 1 0 7 B	10.7V
R1500J108B	C 1 J 1 0 8 B	10.8V
R1500J109B	C 1 J 1 0 9 B	10.9V
R1500J110B	C 1 J 1 1 0 B	11.0V
R1500J111B	C 1 J 1 1 1 B	11.1V
R1500J112B	C 1 J 1 1 2 B	11.2V
R1500J113B	C 1 J 1 1 3 B	11.3V
R1500J114B	C 1 J 1 1 4 B	11.4V
R1500J115B	C 1 J 1 1 5 B	11.5V
R1500J116B	C 1 J 1 1 6 B	11.6V
R1500J117B	C 1 J 1 1 7 B	11.7V
R1500J118B	C 1 J 1 1 8 B	11.8V
R1500J119B	C 1 J 1 1 9 B	11.9V
R1500J120B	C 1 J 1 2 0 B	12.0V

1. The products and the product specifications described in this document are subject to change or discontinuation of production without notice for reasons such as improvement. Therefore, before deciding to use the products, please refer to our sales representatives for the latest information thereon.
2. The materials in this document may not be copied or otherwise reproduced in whole or in part without prior written consent of our company.
3. Please be sure to take any necessary formalities under relevant laws or regulations before exporting or otherwise taking out of your country the products or the technical information described herein.
4. The technical information described in this document shows typical characteristics of and example application circuits for the products. The release of such information is not to be construed as a warranty of or a grant of license under our company's or any third party's intellectual property rights or any other rights.
5. The products listed in this document are intended and designed for use as general electronic components in standard applications (office equipment, telecommunication equipment, measuring instruments, consumer electronic products, amusement equipment etc.). Those customers intending to use a product in an application requiring extreme quality and reliability, for example, in a highly specific application where the failure or misoperation of the product could result in human injury or death (aircraft, spacevehicle, nuclear reactor control system, traffic control system, automotive and transportation equipment, combustion equipment, safety devices, life support system etc.) should first contact us.
6. We are making our continuous effort to improve the quality and reliability of our products, but semiconductor products are likely to fail with certain probability. In order to prevent any injury to persons or damages to property resulting from such failure, customers should be careful enough to incorporate safety measures in their design, such as redundancy feature, fire containment feature and fail-safe feature. We do not assume any liability or responsibility for any loss or damage arising from misuse or inappropriate use of the products.
7. Anti-radiation design is not implemented in the products described in this document.
8. The X-ray exposure can influence functions and characteristics of the products. Confirm the product functions and characteristics in the evaluation stage.
9. WLCSP products should be used in light shielded environments. The light exposure can influence functions and characteristics of the products under operation or storage.
10. There can be variation in the marking when different AOI (Automated Optical Inspection) equipment is used. In the case of recognizing the marking characteristic with AOI, please contact our sales or our distributor before attempting to use AOI.
11. Please contact our sales representatives should you have any questions or comments concerning the products or the technical information.

NISSHINBO

Nisshinbo Micro Devices Inc.

Official website
https://www.nisshinbo-microdevices.co.jp/en/
Purchase information
https://www.nisshinbo-microdevices.co.jp/en/buy/

ENTEGRECİ

Bu belge www.entegreci.com üzerinden sunulmaktadır.

Elektronik komponent tedarikinde Entegreci

Entegreci, Eskişehir merkezli, Türkiye geneline satış yapan bir elektronik komponent mağazasıdır. Entegreler (IC), mikrodenetleyiciler, transistörler, diyotlar, pasif elemanlar, konnektörler, modüller ve geliştirme kartları tek adetten seri üretim adetlerine kadar satılır. Ürün sayfalarında güncel stok durumunu, fiyatı ve datasheet bağlantısını bulabilirsiniz.

Parça koduyla arama

Üretici parça numarasını yazın; stok ve fiyatı hemen görün.

www.entegreci.com

Ürün kategorileri

Entegreden kapasitöre tüm elektronik komponent kategorileri.

Kategorilere göz atın

Üreticiler

Aradığınız üreticinin ürünlerini tek sayfada inceleyin.

Üreticileri görün

Toplu alım ve teklif

Listede olmayan ya da yüksek adetli parçalar için teklif isteyin.

Teklif isteyin

www.entegreci.com | **destek@entegreci.com** | **0850 305 90 34**

Entegreci is an online electronic components store based in Türkiye. Search by manufacturer part number to see stock, prices and datasheets for integrated circuits, microcontrollers, transistors, passive components and connectors, or request a quote for parts that are not listed.

Bu sayfa Entegreci tarafından eklenmiştir. Belgenin önceki sayfaları asıl yayıncısına aittir ve içeriği değiştirilmemiştir; en güncel sürüm için belgenin yayıncısına başvurun.