500 mA LDO Regulator (Operating Voltage up to 24 V) for Automotive Applications

NO.EC-151-140513

OUTLINE

The R1500x is a positive voltage regulator (VR) IC developed with CMOS process technology. The R1500xxxxB has features of high input voltage operating, 500 mA output current drive, and low supply current.

A DMOS transistor is used for the driver, high voltage operating and low on resistance (0.6 Ω at V_{SET} = 10 V) device is realized. A standard regulator circuit with a current limit circuit and a thermal shutdown circuit are built in the R1500x.

As the operating temperature range is from −40°C to 105°C and maximum input voltage is up to 24 V, the R1500x is suitable for the constant voltage source for car accessories.

The regulator output voltage is fixed in the R1500x. Output voltage accuracy is ±2.0% and output voltage range is from 3.0 V to 12.0 V with a step of 0.1 V. The chip enable pin realizes ultra low supply current standby mode.

The R1500x is offered in a 5-pin SOT-89-5 package which can achieve the smallest possible footprint solution on boards where area is limited.

* The DMOS (Double Diffused MOS) transistor adopted by R1500x is characterized by a double diffusion structure which comprises a low density n-type (channel) diffused layer and a high density p-type (sources) diffused layer from the edge of the gate electrode. The R1500x possesses outstanding properties of high operating voltage and low on-resistance, which have been achieved by the channel length scaled down to submicron dimensions and decreased thickness of the gate oxide film.

FEATURES

- Input Voltage Range (Maximum Rating)..... 4.0 V to 24.0 V (36 V)
- Operating Temperature range..... −40°C to 105°C
- Supply Current..... Typ. 70 µA
- Standby Current..... Typ. 0.1 µA
- Ripple Rejection ..... Typ. 60 dB (V_{SET} = 5.0 V)
- Temperature-Drift Coefficient of Output Voltage..... Typ. ±100 ppm/°C
- Output Current..... Min. 500 mA (V_{IN} = V_{SET} + 1 V)
- Line Regulation..... Typ. 0.05%/V
- Output Voltage Accuracy ..... ±2%
- Output Voltage..... 3.0 V to 12.0 V (0.1 V step)
- Package..... SOT-89-5
- Built-in Current Limit Circuit..... Typ. 65 mA
- Built-in Fold-Back Circuit
- Built-in Thermal Shutdown Circuit

APPLICATIONS

- Power source for accessories such as car audios, car navigation systems, and ETC systems
- Power source for ECUs such as EV inverter and battery charge control unit

BLOCK DIAGRAM

R1500xxxxB

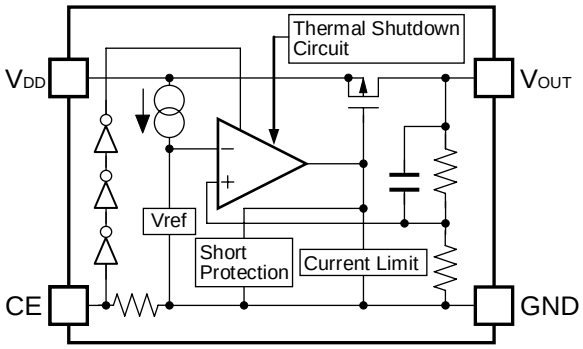

SELECTION GUIDE

The output voltage for the IC can be selected at the user's request.

Product Name	Package	Quantity per Reel	Pb Free	Halogen Free
R1500HxxxB-T1-#E	SOT-89-5	1,000 pcs	Yes	Yes

xxx: The set output voltage (V_{SET}) can be designated in the range from 3.0 V (030) to 12.0 V (120) in 0.1 V step.

#: Specify Automotive Class Code

	Operating Temperature Range	Guaranteed Specs Temperature Range	Screening
A	−40°C to 105°C	25°C	High Temperature
J	−40°C to 105°C	25°C	High and Low Temperature

PIN DESCRIPTION

SOT-89-5

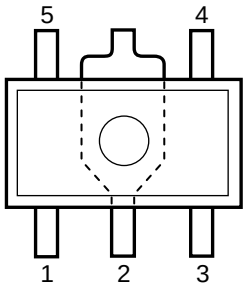

SOT-89-5

Pin No.	Symbol	Description
1	V_{DD}	Input Pin
2	GND*	Ground Pin
3	GND*	Ground Pin
4	CE	Chip Enable Pin ("H" Active)
5	V_{OUT}	Output Pin

* The GND pin must be wired together when it is mounted on board.

ABSOLUTE MAXIMUM RATINGS

Symbol	Item		Rating	Unit
V_{IN}	Input Voltage		36	V
V_{CE}	Input Voltage (CE Pin)		−0.3 to V_{IN} ≤ 36	V
V_{OUT}	Output Voltage		−0.3 to V_{IN} ≤ 36	V
P_D	Power Dissipation (SOT-89-5)*	Standard Land Pattern	1120	mW
		High Wattage Land Pattern	1620	
Tj	Junction Temperature		−40 to 150	°C
Tstg	Storage Temperature Range		−55 to 150	°C

* Refer to *PACKAGE INFORMATION* for detailed information.

ABSOLUTE MAXIMUM RATINGS

Electronic and mechanical stress momentarily exceeded absolute maximum ratings may cause the permanent damages and may degrade the life time and safety for both device and system using the device in the field.
The functional operation at or over these absolute maximum ratings is not assured.

RECOMMENDED OPERATING CONDITIONS

Symbol	Item	Rating	Unit
V_{IN}	Input Voltage	4.0 to 24.0	V
Ta	Operating Temperature Range	−40 to 105	°C

RECOMMENDED OPERATING CONDITIONS

All of electronic equipment should be designed that the mounted semiconductor devices operate within the recommended operating conditions. The semiconductor devices cannot operate normally over the recommended operating conditions, even if when they are used over such conditions by momentary electronic noise or surge. And the semiconductor devices may receive serious damage when they continue to operate over the recommended operating conditions.

ELECTRICAL CHARACTERISTICS

V_{IN} = V_{SET} + 1.0 V, C_{IN} = 0.47 µF, C_{OUT} = 10 µF, unless otherwise noted.
The specifications surrounded by [ ] are guaranteed by design engineering at –40°C ≤ Ta ≤ 105°C.

R1500xxxxB (Ta = 25°C)

Symbol	Item	Conditions		Min.	Typ.	Max.	Unit
V_{OUT}	Output Voltage	I_{OUT} = 100 mA	Ta = 25°C	x 0.98		x 1.02	V
			−40°C ≤ Ta ≤ 105°C	x [0.965]		x [1.035]	
I_{LIM}	Output Current Limit			[500]			mA
I_{SS}	Supply Current	V_{IN} = V_{CE}			70	[140]	µA
Istandby	Standby Current	V_{IN} = 24 V			0.1	[1.0]	µA
ΔV_{OUT} /ΔI_{OUT}	Load Regulation	V_{IN} = V_{SET} + 2.0 V 0.1 mA ≤ I_{OUT} ≤ 200 mA			25	[60]	mV
ΔV_{OUT} /ΔV_{IN}	Line Regulation	V_{SET} + 1 V ≤ V_{IN} ≤ 24 V I_{OUT} = 10 mA			0.05	[0.1]	%/V
V_{DIF}	Dropout Voltage	I_{OUT} = 200 mA		Refer to the *Product-specific Electrical Characteristics*			
I_{SC}	Short Current Limit	V_{OUT} = 0 V			65		mA
V_{CEH}	CE Input Voltage "H"			[2.0]		[V_{IN}]	V
V_{CEL}	CE Input Voltage "L"			[0]		[0.4]	V
T_{TSD}	Thermal Shutdown Temperature	Junction Temperature		150	170		°C
T_{TSR}	Thermal Shutdown Released Temperature	Junction Temperature			145		°C

All test items listed under Electrical Characteristics are done under the pulse load condition (Tj ≈ Ta = 25°C).

Product-specific Electrical Characteristics

The specifications surrounded by [ ] are guaranteed by design engineering at –40°C ≤ Ta ≤ 105°C.

(Ta = 25°C)

Product Name	V_{OUT} [V]					V_{DIF} [V]	
	(Ta = 25°C)			(−40°C ≤ Ta ≤ 105°C)			
	MIN.	TYP.	MAX.	TYP.	MAX.	TYP.	MAX.
R1500H030B	2.940	3.000	3.060	[2.895]	[3.105]		
R1500H031B	3.038	3.100	3.162	[2.992]	[3.208]		
R1500H032B	3.136	3.200	3.264	[3.088]	[3.312]		
R1500H033B	3.234	3.300	3.366	[3.185]	[3.415]		
R1500H034B	3.332	3.400	3.468	[3.281]	[3.519]		
R1500H035B	3.430	3.500	3.570	[3.378]	[3.622]		
R1500H036B	3.528	3.600	3.672	[3.474]	[3.726]		
R1500H037B	3.626	3.700	3.774	[3.571]	[3.829]		
R1500H038B	3.724	3.800	3.876	[3.667]	[3.933]		
R1500H039B	3.822	3.900	3.978	[3.764]	[4.036]		
R1500H040B	3.920	4.000	4.080	[3.860]	[4.140]	0.135	[0.225]
R1500H041B	4.018	4.100	4.182	[3.957]	[4.243]		
R1500H042B	4.116	4.200	4.284	[4.053]	[4.347]		
R1500H043B	4.214	4.300	4.386	[4.150]	[4.450]		
R1500H044B	4.312	4.400	4.488	[4.246]	[4.554]		
R1500H045B	4.410	4.500	4.590	[4.343]	[4.657]		
R1500H046B	4.508	4.600	4.692	[4.439]	[4.761]		
R1500H047B	4.606	4.700	4.794	[4.536]	[4.864]		
R1500H048B	4.704	4.800	4.896	[4.632]	[4.968]		
R1500H049B	4.802	4.900	4.998	[4.729]	[5.071]		
R1500H050B	4.900	5.000	5.100	[4.825]	[5.175]		
R1500H051B	4.998	5.100	5.202	[4.922]	[5.278]		
R1500H052B	5.096	5.200	5.304	[5.018]	[5.382]		
R1500H053B	5.194	5.300	5.406	[5.115]	[5.485]		
R1500H054B	5.292	5.400	5.508	[5.211]	[5.589]		
R1500H055B	5.390	5.500	5.610	[5.308]	[5.692]	0.115	[0.180]
R1500H056B	5.488	5.600	5.712	[5.404]	[5.796]		
R1500H057B	5.586	5.700	5.814	[5.501]	[5.899]		
R1500H058B	5.684	5.800	5.916	[5.597]	[6.003]		
R1500H059B	5.782	5.900	6.018	[5.694]	[6.106]		

The specifications surrounded by [ ] are guaranteed by design engineering at –40°C ≤ Ta ≤ 105°C.

(Ta = 25°C)

Product Name	V_{OUT} [V]					V_{DIF} [V]	
	(Ta = 25°C)			(−40°C ≤ Ta ≤ 105°C)			
	MIN.	TYP.	MAX.	MIN.	MAX.	TYP.	MAX.
R1500H060B	5.880	6.000	6.120	[5.790]	[6.210]	0.115	[0.180]
R1500H061B	5.978	6.100	6.222	[5.887]	[6.313]		
R1500H062B	6.076	6.200	6.324	[5.983]	[6.417]		
R1500H063B	6.174	6.300	6.426	[6.080]	[6.520]		
R1500H064B	6.272	6.400	6.528	[6.176]	[6.624]		
R1500H065B	6.370	6.500	6.630	[6.273]	[6.727]		
R1500H066B	6.468	6.600	6.732	[6.369]	[6.831]		
R1500H067B	6.566	6.700	6.834	[6.466]	[6.934]		
R1500H068B	6.664	6.800	6.936	[6.562]	[7.038]		
R1500H069B	6.762	6.900	7.038	[6.659]	[7.141]		
R1500H070B	6.860	7.000	7.140	[6.755]	[7.245]		
R1500H071B	6.958	7.100	7.242	[6.852]	[7.348]		
R1500H072B	7.056	7.200	7.344	[6.948]	[7.452]		
R1500H073B	7.154	7.300	7.446	[7.045]	[7.555]		
R1500H074B	7.252	7.400	7.548	[7.141]	[7.659]		
R1500H075B	7.351	7.500	7.650	[7.238]	[7.762]		
R1500H076B	7.448	7.600	7.752	[7.334]	[7.866]		
R1500H077B	7.546	7.700	7.854	[7.431]	[7.969]		
R1500H078B	7.645	7.800	7.956	[7.528]	[8.073]		
R1500H079B	7.743	7.900	8.058	[7.624]	[8.176]		
R1500H080B	7.841	8.000	8.160	[7.721]	[8.280]		
R1500H081B	7.938	8.100	8.262	[7.817]	[8.383]		
R1500H082B	8.037	8.200	8.364	[7.914]	[8.487]		
R1500H083B	8.135	8.300	8.466	[8.010]	[8.590]		
R1500H084B	8.233	8.400	8.568	[8.107]	[8.694]		
R1500H085B	8.331	8.500	8.670	[8.203]	[8.797]		
R1500H086B	8.429	8.600	8.772	[8.300]	[8.901]		
R1500H087B	8.527	8.700	8.874	[8.396]	[9.004]		
R1500H088B	8.625	8.800	8.976	[8.493]	[9.108]		
R1500H089B	8.723	8.900	9.078	[8.589]	[9.211]		

The specifications surrounded by [ ] are guaranteed by design engineering at –40°C ≤ Ta ≤ 105°C.

(Ta = 25°C)

Product Name	V_{OUT} [V]					V_{DIF} [V]	
	(Ta = 25°C)			(−40°C ≤ Ta ≤ 105°C)			
	MIN.	TYP.	MAX.	MIN.	MAX.	TYP.	MAX.
R1500H090B	8.821	9.000	9.180	[8.686]	[9.315]		
R1500H091B	8.919	9.100	9.282	[8.782]	[9.418]		
R1500H092B	9.017	9.200	9.384	[8.879]	[9.522]		
R1500H093B	9.115	9.300	9.486	[8.975]	[9.625]		
R1500H094B	9.213	9.400	9.588	[9.072]	[9.729]		
R1500H095B	9.311	9.500	9.690	[9.168]	[9.832]		
R1500H096B	9.409	9.600	9.792	[9.265]	[9.936]		
R1500H097B	9.507	9.700	9.894	[9.361]	[10.039]		
R1500H098B	9.605	9.800	9.996	[9.458]	[10.143]		
R1500H099B	9.703	9.900	10.098	[9.554]	[10.246]		
R1500H100B	9.800	10.000	10.200	[9.650]	[10.350]		
R1500H101B	9.898	10.100	10.302	[9.747]	[10.453]		
R1500H102B	9.996	10.200	10.404	[9.843]	[10.557]		
R1500H103B	10.094	10.300	10.506	[9.940]	[10.660]		
R1500H104B	10.192	10.400	10.608	[10.036]	[10.764]		
R1500H105B	10.290	10.500	10.710	[10.133]	[10.867]	0.095	[0.155]
R1500H106B	10.388	10.600	10.812	[10.229]	[10.971]		
R1500H107B	10.486	10.700	10.914	[10.326]	[11.074]		
R1500H108B	10.584	10.800	11.016	[10.422]	[11.178]		
R1500H109B	10.682	10.900	11.118	[10.519]	[11.281]		
R1500H110B	10.780	11.000	11.220	[10.615]	[11.385]		
R1500H111B	10.878	11.100	11.322	[10.712]	[11.488]		
R1500H112B	10.976	11.200	11.424	[10.808]	[11.592]		
R1500H113B	11.074	11.300	11.526	[10.905]	[11.695]		
R1500H114B	11.172	11.400	11.628	[11.001]	[11.799]		
R1500H115B	11.270	11.500	11.730	[11.098]	[11.902]		
R1500H116B	11.368	11.600	11.832	[11.194]	[12.006]		
R1500H117B	11.466	11.700	11.934	[11.291]	[12.109]		
R1500H118B	11.564	11.800	12.036	[11.387]	[12.213]		
R1500H119B	11.662	11.900	12.138	[11.484]	[12.316]		
R1500H120B	11.760	12.000	12.240	[11.580]	[12.420]		

TYPICAL APPLICATION

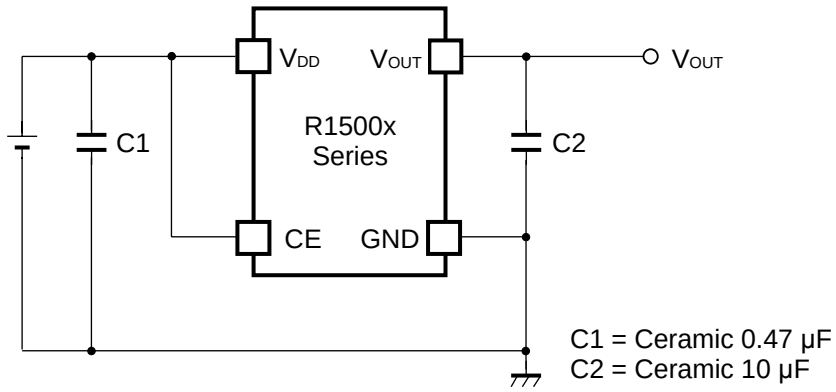

External Components

Symbol	Description
C2 (C_{OUT})	10 µF, Ceramic Capacitor Murata GRM32DB31E106K (size: 3225)

TECHNICAL NOTES

When using these ICs, consider the following points:

Phase Compensation

In these ICs, phase compensation is made for securing stable operation even if the load current is varied. For this purpose, use a capacitor C2 with good frequency characteristics and ESR (Equivalent Series Resistance).

If you use a tantalum type capacitor and ESR value of the capacitor is large, output might be unstable. Evaluate your circuit with considering frequency characteristics.

Depending on the capacitor size, manufacturer, and part number, the bias characteristics and temperature characteristics are different. Evaluate the circuit with actual using capacitors.

PCB Layout

Make V_{DD} and GND lines sufficient. If their impedance is high, noise pickup or unstable operation may result. Connect a capacitor C1 with a capacitance value as much as 0.47 µF or more between V_{DD} and GND pin, and as close as possible to the pins.

Set external components, especially the output capacitor C2, as close as possible to the ICs, and make wiring as short as possible.

No. 2 pin and No. 3 pin must be wired to the GND plane when it is mounted on board.

Thermal Shutdown

There is the built-in thermal-shutdown function in R1500x. It discontinues operation of the IC when the junction temperature becomes over 170°C (Typ.) and IC re-operates when the junction temperature under 145°C. If the temperature increasing keeps the IC repeats ON and OFF operating. The output becomes the pulse condition.

TYPICAL APPLICATION FOR IC CHIP BREAKDOWN PREVENTION

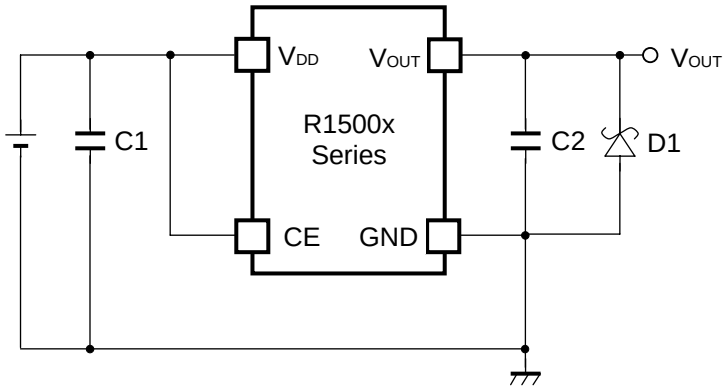

When a sudden surge of electrical current travels along the V_{OUT} pin and GND due to a short-circuit, electrical resonance of a circuit involving an output capacitor (C2) and a short circuit inductor generates a negative voltage and may damage the device or the load devices. Connecting a schottky diode (D1) between the V_{OUT} pin and GND has the effect of preventing damage to them.

PACKAGE INFORMATION

POWER DISSIPATION (SOT-89-5)

Power Dissipation (P_D) depends on conditions of mounting on board. This specification is based on the measurement at the condition below:

Measurement Conditions

	High Wattage Land Pattern	Standard Land Pattern
Environment	Mounting on Board (Wind velocity = 0 m/s)	Mounting on Board (Wind velocity = 0 m/s)
Board Material	Glass cloth epoxy plastic (Double sided)	Glass cloth epoxy plastic (Double sided)
Board Dimensions	30 mm x 30 mm x 1.6 mm	50 mm x 50 mm x 1.6 mm
Copper Ratio	Top side: Approx. 20%, Back side: Approx. 100%	Top side: Approx. 10%, Back side: Approx. 100%
Through-hole	ϕ0.85 mm x 10 pcs	-

Measurement Result (Ta = 25°C, Tjmax = 150°C)

	High Wattage Land Pattern	Standard Land Pattern	Free Air
Power Dissipation	1620 mW	1120 mW	620 mW
Thermal Resistance	77°C/W	111°C/W	200°C/W

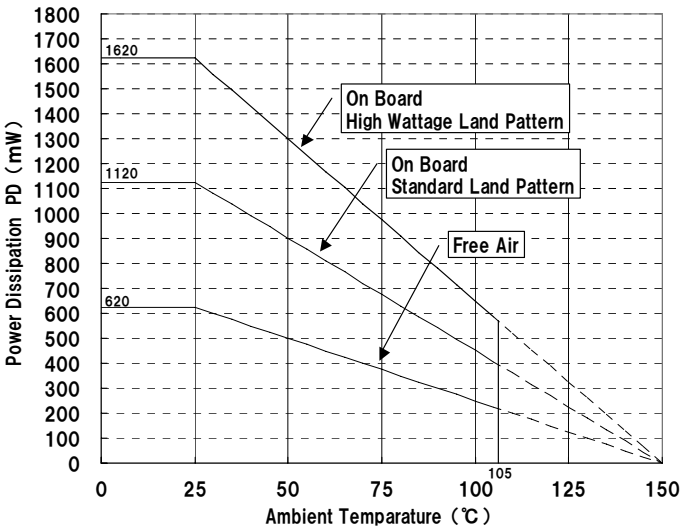

Power Dissipation

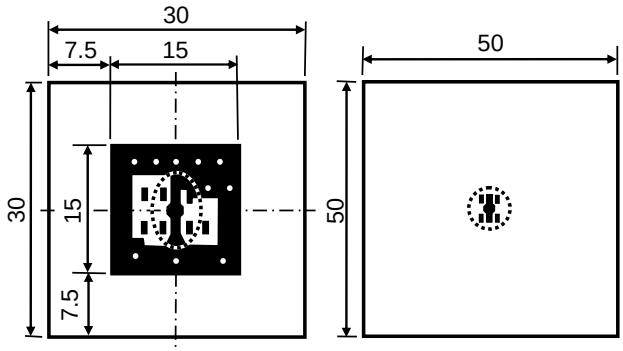

High Wattage Standard

Measurement Board Pattern

IC Mount Area (Unit: mm)

PACKAGE DIMENSIONS (SOT-89-5)

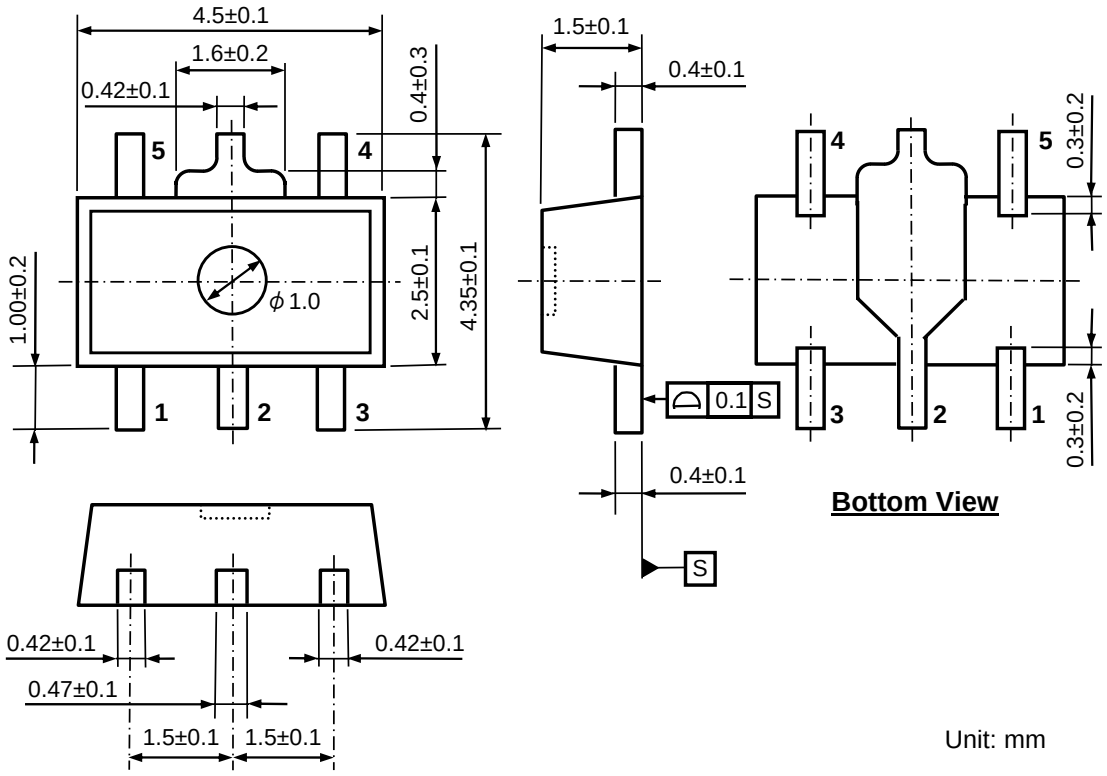

Package Dimensions (SOT-89-5)

MARK SPECIFICATION (SOT-89-5)

①②③④: Product Code … **Refer to *MARK SPECIFICATION TABLE (SOT-89-5)***

⑤⑥: Lot Number … Alphanumeric Serial Number

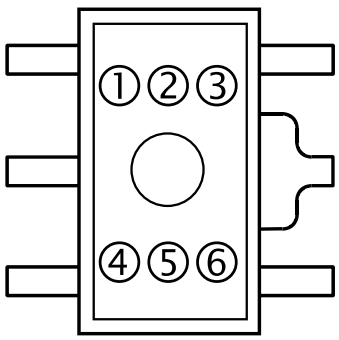

Mark Specification (SOT-89-5)

MARK SPECIFICATION TABLE (SOT-89-5)

Product Name	①②③④	V_{SET}
R1500H030B	R 0 3 0	3.0 V
R1500H031B	R 0 3 1	3.1 V
R1500H032B	R 0 3 2	3.2 V
R1500H033B	R 0 3 3	3.3 V
R1500H034B	R 0 3 4	3.4 V
R1500H035B	R 0 3 5	3.5 V
R1500H036B	R 0 3 6	3.6 V
R1500H037B	R 0 3 7	3.7 V
R1500H038B	R 0 3 8	3.8 V
R1500H039B	R 0 3 9	3.9 V
R1500H040B	R 0 4 0	4.0 V
R1500H041B	R 0 4 1	4.1 V
R1500H042B	R 0 4 2	4.2 V
R1500H043B	R 0 4 3	4.3 V
R1500H044B	R 0 4 4	4.4 V
R1500H045B	R 0 4 5	4.5 V
R1500H046B	R 0 4 6	4.6 V
R1500H047B	R 0 4 7	4.7 V
R1500H048B	R 0 4 8	4.8 V
R1500H049B	R 0 4 9	4.9 V
R1500H050B	R 0 5 0	5.0 V
R1500H051B	R 0 5 1	5.1 V
R1500H052B	R 0 5 2	5.2 V
R1500H053B	R 0 5 3	5.3 V
R1500H054B	R 0 5 4	5.4 V
R1500H055B	R 0 5 5	5.5 V
R1500H056B	R 0 5 6	5.6 V
R1500H057B	R 0 5 7	5.7 V
R1500H058B	R 0 5 8	5.8 V
R1500H059B	R 0 5 9	5.9 V
R1500H060B	R 0 6 0	6.0 V
R1500H061B	R 0 6 1	6.1 V
R1500H062B	R 0 6 2	6.2 V
R1500H063B	R 0 6 3	6.3 V
R1500H064B	R 0 6 4	6.4 V
R1500H065B	R 0 6 5	6.5 V
R1500H066B	R 0 6 6	6.6 V
R1500H067B	R 0 6 7	6.7 V
R1500H068B	R 0 6 8	6.8 V
R1500H069B	R 0 6 9	6.9 V

Product Name	①②③④	V_{SET}
R1500H070B	R 0 7 0	7.0 V
R1500H071B	R 0 7 1	7.1 V
R1500H072B	R 0 7 2	7.2 V
R1500H073B	R 0 7 3	7.3 V
R1500H074B	R 0 7 4	7.4 V
R1500H075B	R 0 7 5	7.5 V
R1500H076B	R 0 7 6	7.6 V
R1500H077B	R 0 7 7	7.7 V
R1500H078B	R 0 7 8	7.8 V
R1500H079B	R 0 7 9	7.9 V
R1500H080B	R 0 8 0	8.0 V
R1500H081B	R 0 8 1	8.1 V
R1500H082B	R 0 8 2	8.2 V
R1500H083B	R 0 8 3	8.3 V
R1500H084B	R 0 8 4	8.4 V
R1500H085B	R 0 8 5	8.5 V
R1500H086B	R 0 8 6	8.6 V
R1500H087B	R 0 8 7	8.7 V
R1500H088B	R 0 8 8	8.8 V
R1500H089B	R 0 8 9	8.9 V
R1500H090B	R 0 9 0	9.0 V
R1500H091B	R 0 9 1	9.1 V
R1500H092B	R 0 9 2	9.2 V
R1500H093B	R 0 9 3	9.3 V
R1500H094B	R 0 9 4	9.4 V
R1500H095B	R 0 9 5	9.5 V
R1500H096B	R 0 9 6	9.6 V
R1500H097B	R 0 9 7	9.7 V
R1500H098B	R 0 9 8	9.8 V
R1500H099B	R 0 9 9	9.9 V
R1500H100B	R 1 0 0	10.0 V
R1500H101B	R 1 0 1	10.1 V
R1500H102B	R 1 0 2	10.2 V
R1500H103B	R 1 0 3	10.3 V
R1500H104B	R 1 0 4	10.4 V
R1500H105B	R 1 0 5	10.5 V
R1500H106B	R 1 0 6	10.6 V
R1500H107B	R 1 0 7	10.7 V
R1500H108B	R 1 0 8	10.8 V
R1500H109B	R 1 0 9	10.9 V

Product Name	①②③④	V_{SET}
R1500H110B	R 1 1 0	11.0 V
R1500H111B	R 1 1 1	11.1 V
R1500H112B	R 1 1 2	11.2 V
R1500H113B	R 1 1 3	11.3 V
R1500H114B	R 1 1 4	11.4 V
R1500H115B	R 1 1 5	11.5 V
R1500H116B	R 1 1 6	11.6 V
R1500H117B	R 1 1 7	11.7 V
R1500H118B	R 1 1 8	11.8 V
R1500H119B	R 1 1 9	11.9 V
R1500H120B	R 1 2 0	12.0 V

TEST CIRCUITS

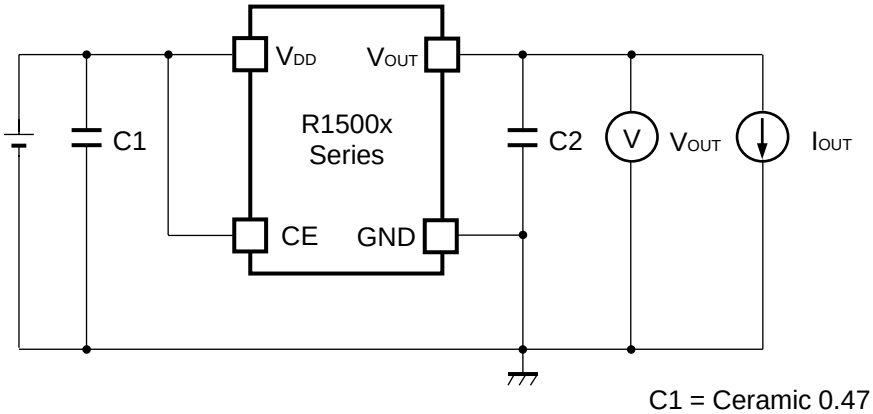

Basic Test Circuit

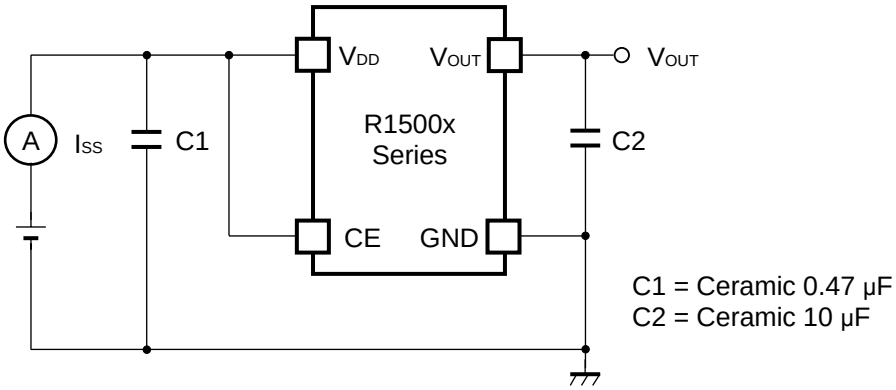

Test Circuit for Supply Current

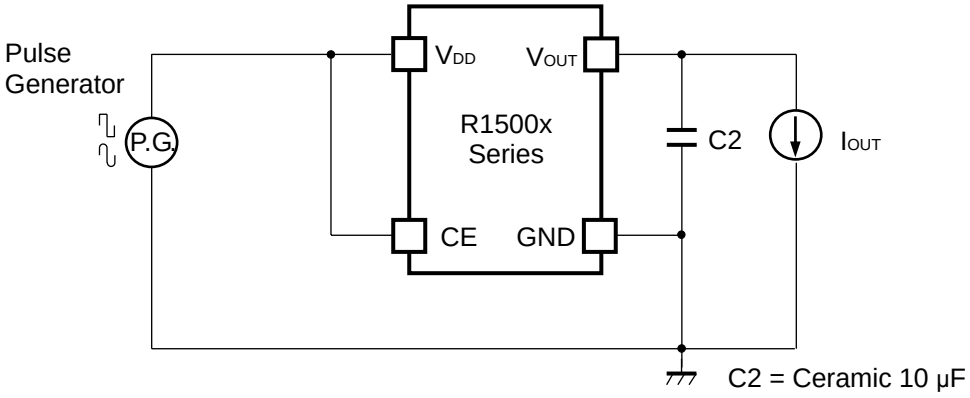

Test Circuit for Ripple Rejection, Input Transient Response

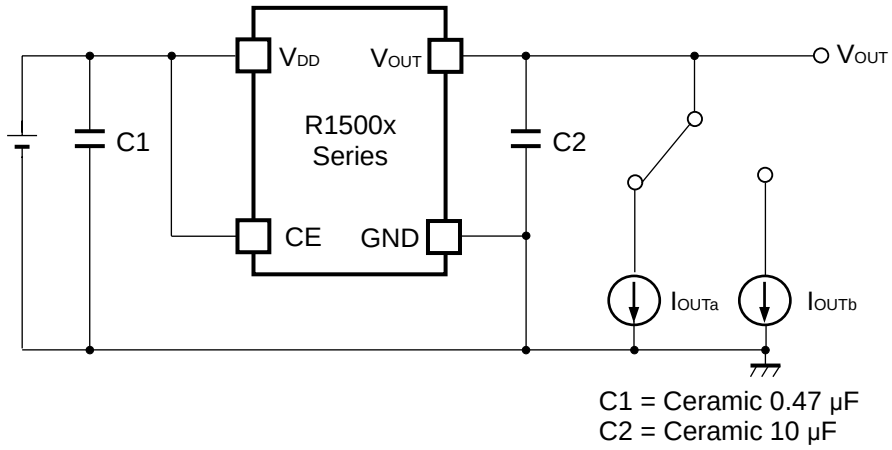

Test Circuit for Load Transient Response

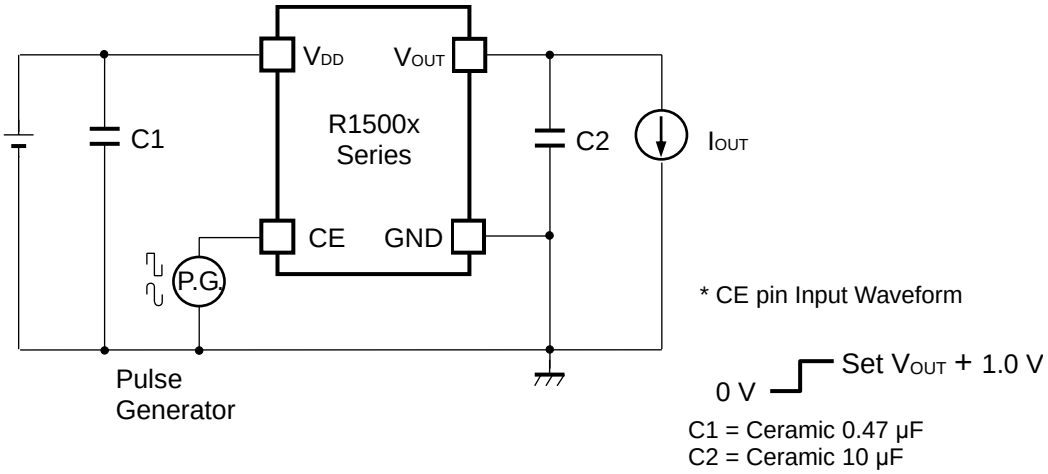

Test Circuit for Turn On Speed with CE pin

TYPICAL CHARACTERISTICS

Note: Typical Characteristics are intended to be used as reference data; they are not guaranteed.

1) Output Voltage vs. Output Current (C1 = Ceramic 0.47 µF, C2 = Ceramic 10 µF, Ta = 25°C)

R1500x030B

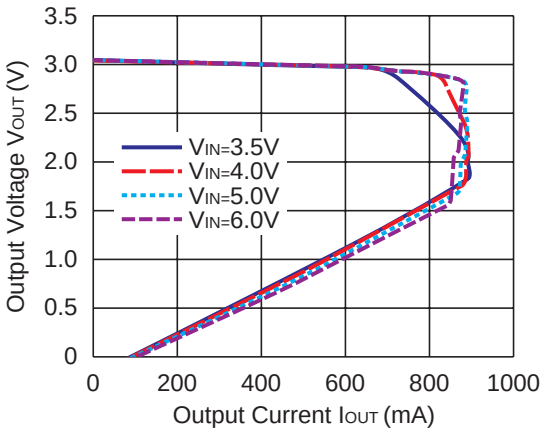

R1500x050B

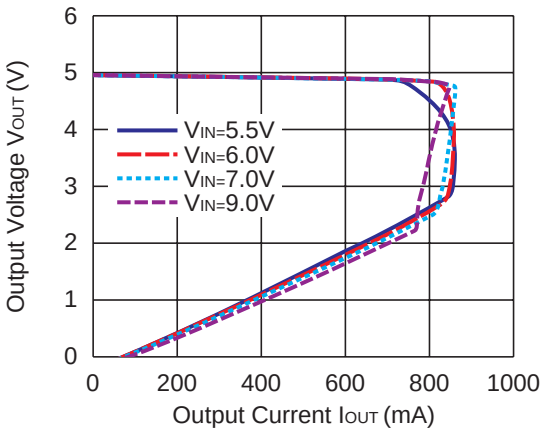

R1500x090B

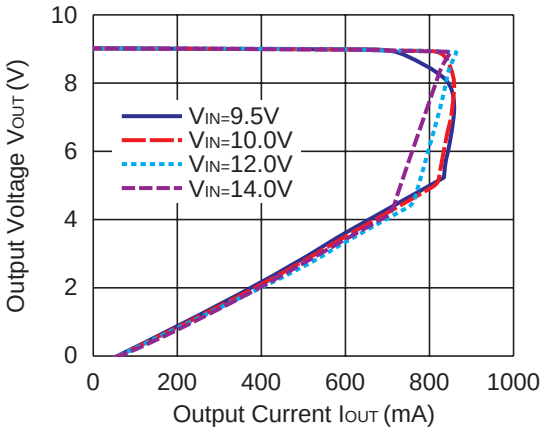

R1500x120B

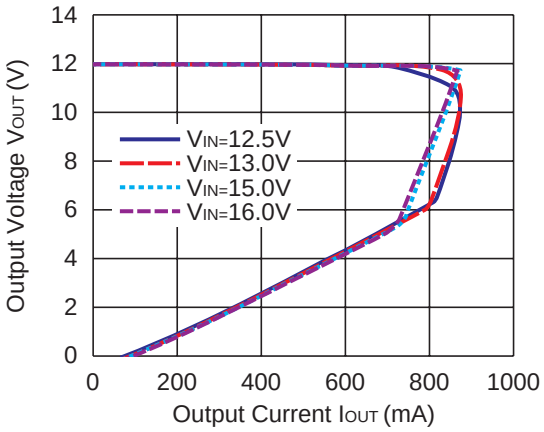

2) Output Voltage vs. Input Voltage (C1 = Ceramic 0.47 µF, C2 = Ceramic 10 µF, Ta = 25°C)

R1500x030B

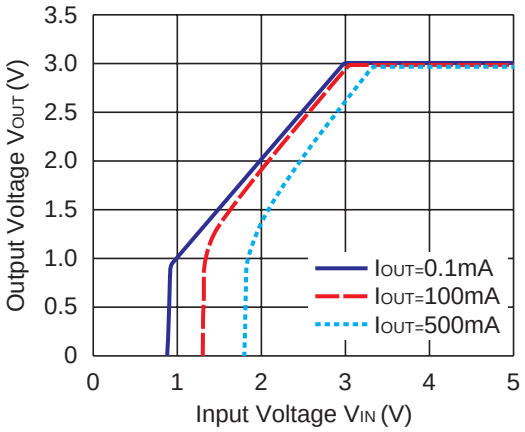

R1500x050B

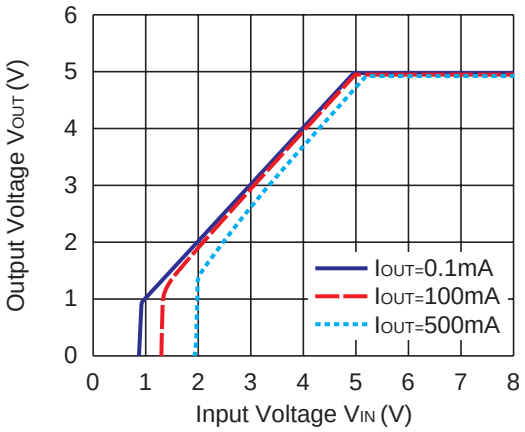

R1500x090B

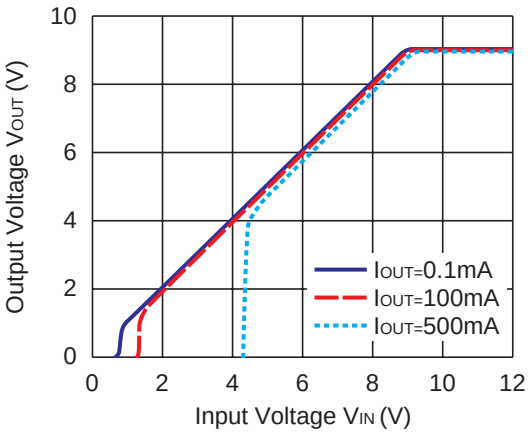

R1500x120B

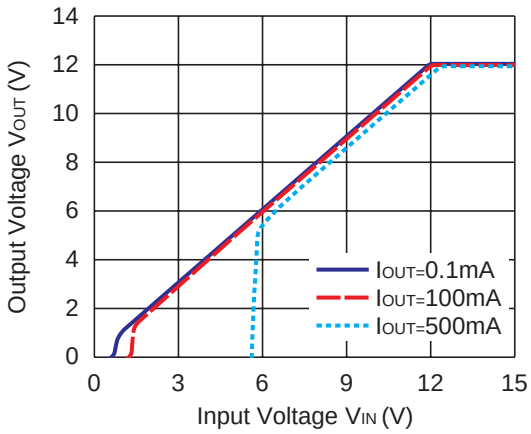

3) Supply Current vs. Input Voltage (C1 = Ceramic 0.47 µF, C2 = Ceramic 10 µF, Ta = 25°C)

R1500x030B

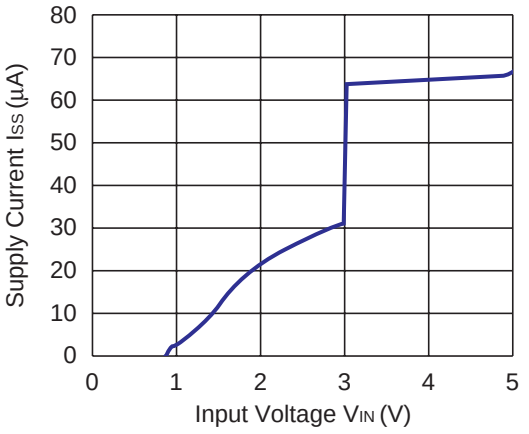

R1500x050B

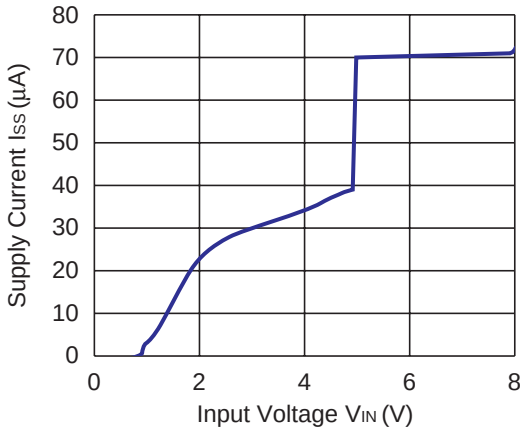

R1500x090B

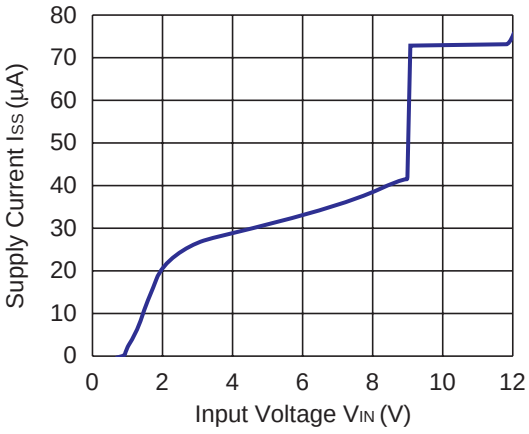

R1500x120B

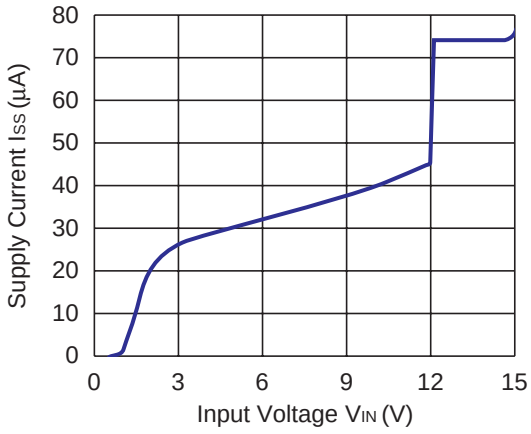

4) Output Voltage vs. Temperature (C1 = Ceramic 0.47 µF, C2 = Ceramic 10 µF, I_{OUT} = 100 mA)

R1500x030B

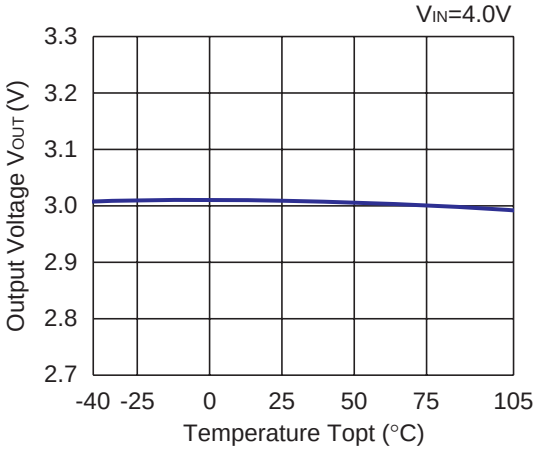

R1500x050B

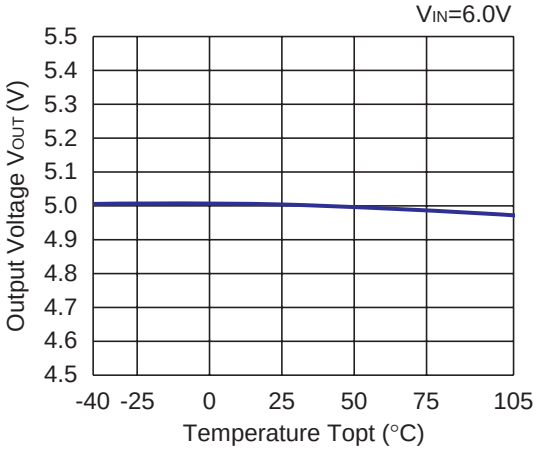

R1500x090B

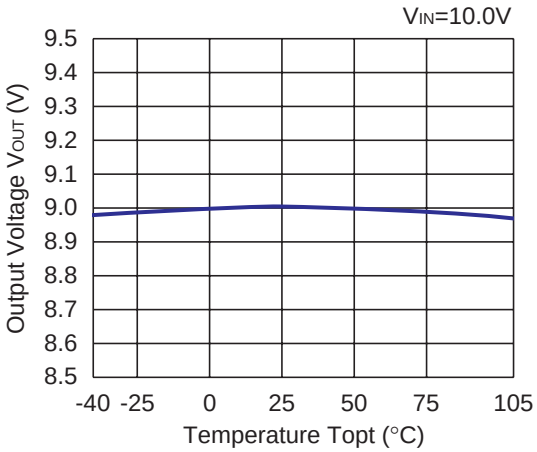

R1500x120B

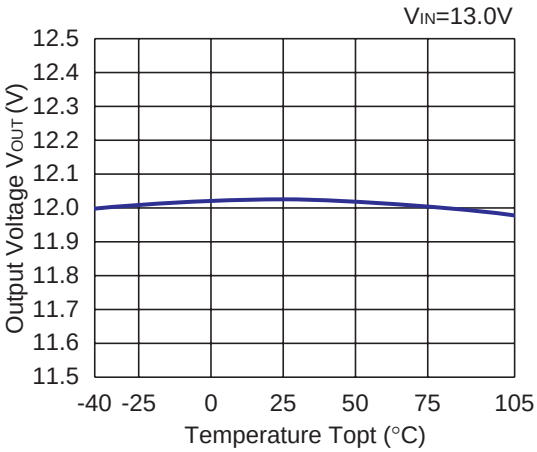

5) Supply Current vs. Temperature (C1 = Ceramic 0.47 µF, C2 = Ceramic 10 µF, I_{OUT} = 0 mA)

R1500x030B

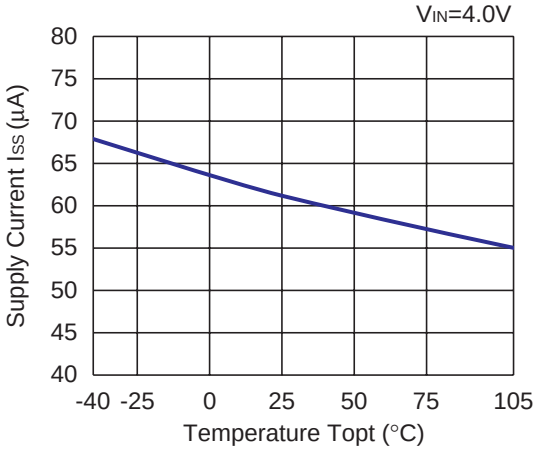

R1500x050B

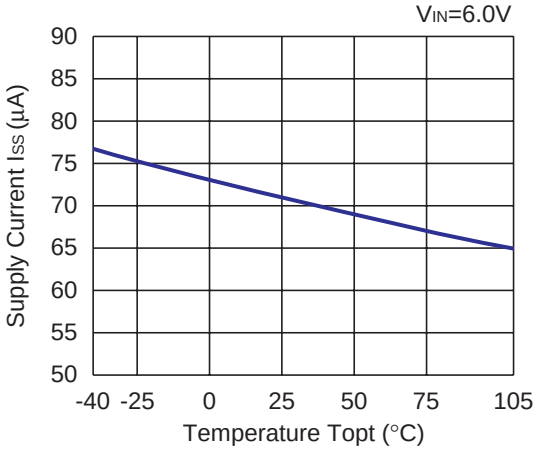

R1500x090B

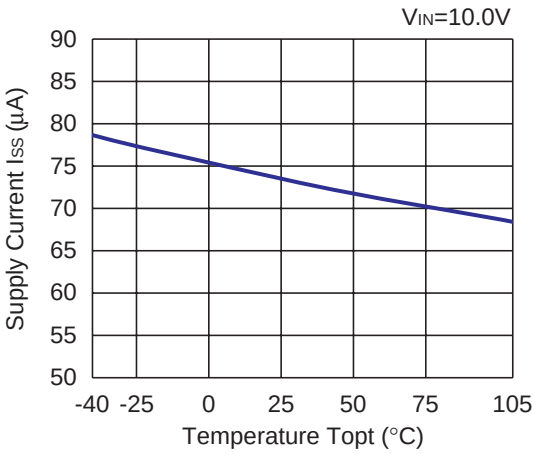

R1500x120B

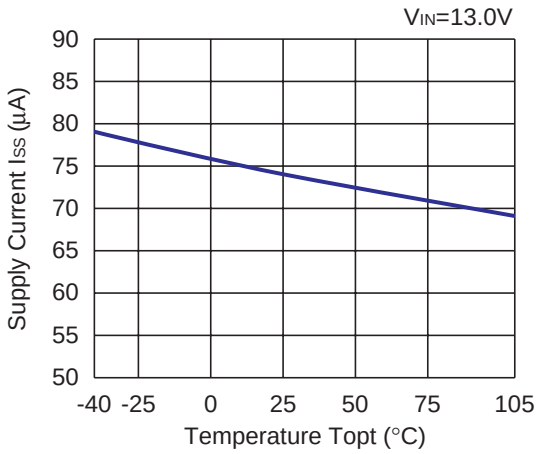

6) Dropout Voltage vs. Output Current (C1 = Ceramic 0.47 µF, C2 = Ceramic 10 µF)

R1500x030B

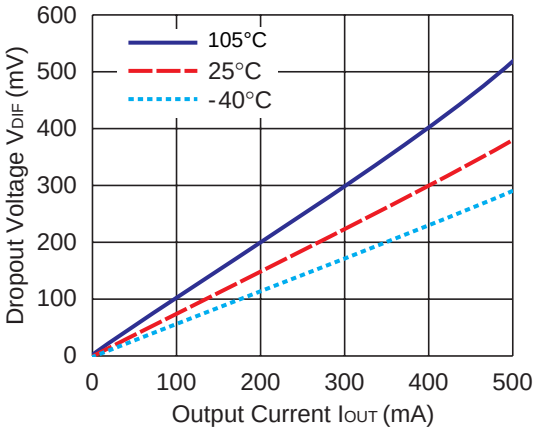

R1500x050B

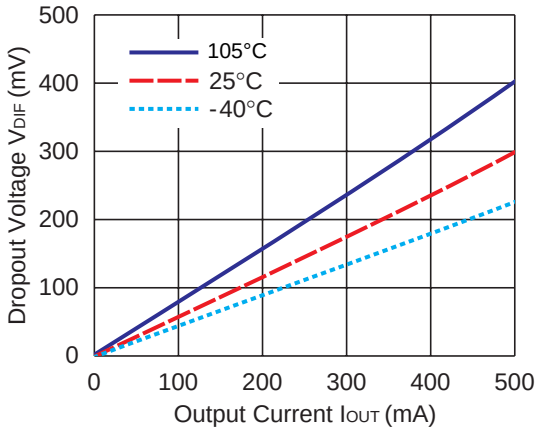

R1500x090B

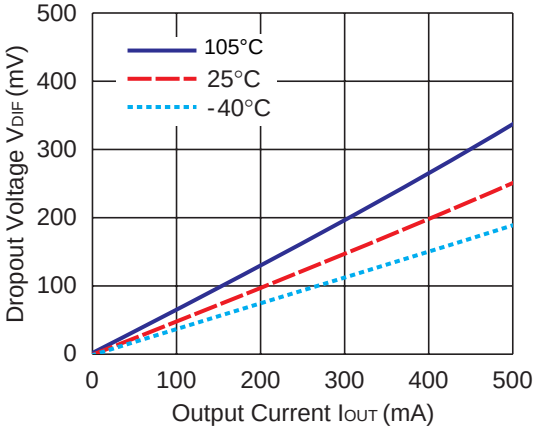

R1500x120B

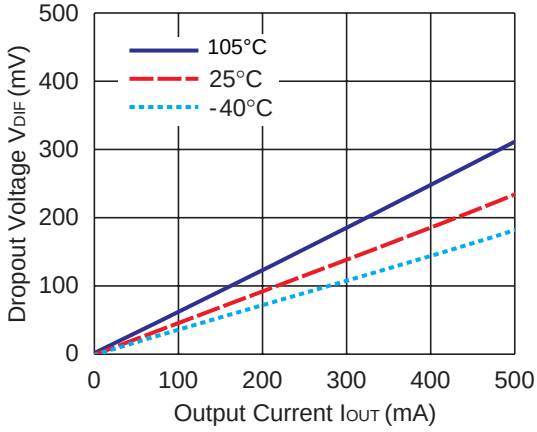

7) Dropout Voltage vs. Set Output Voltage (C1 = Ceramic 0.47 µF, C2 = Ceramic 10 µF, Ta = 25°C)

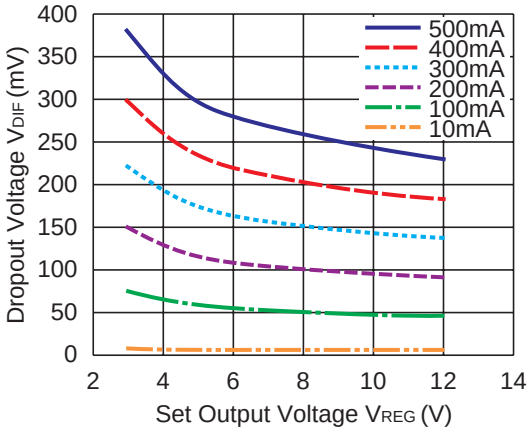

8) Ripple Rejection vs. Input Bias Voltage (C1 = none, C2 = Ceramic 10 µF, I_{OUT} = 100 mA, Ta = 25°C)

R1500x050B

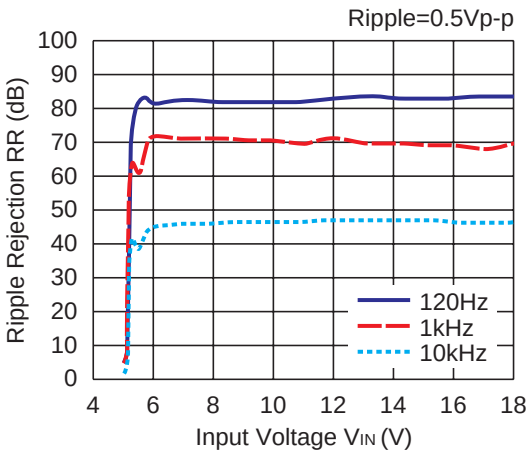

R1500x050B

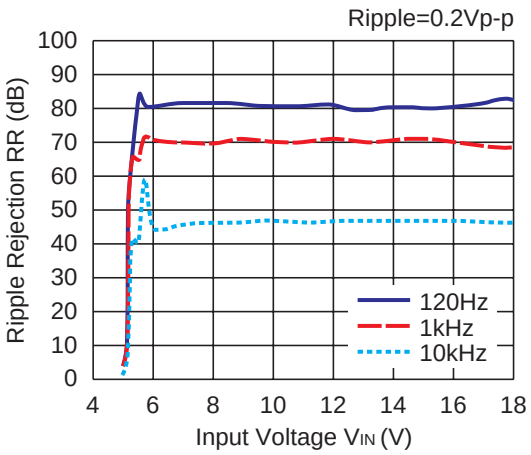

9) Ripple Rejection vs. Frequency (C1 = none, C2 = Ceramic 10 µF, Ripple = 0.5 V_{p-p})

R1500x030B

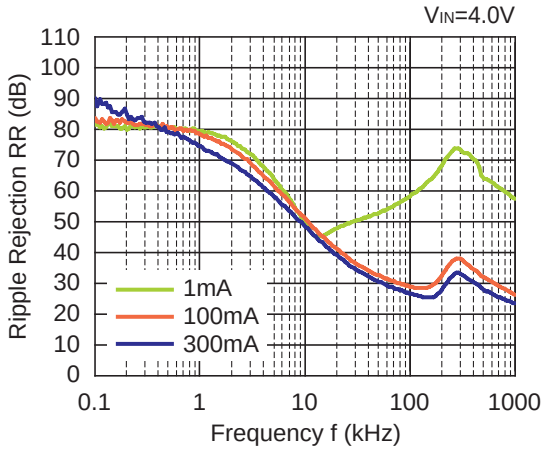

R1500x050B

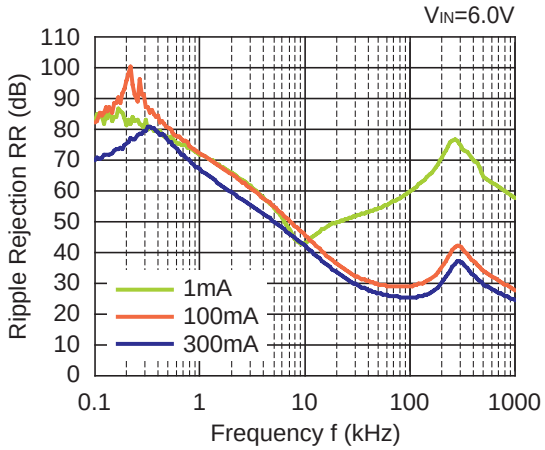

R1500x090B

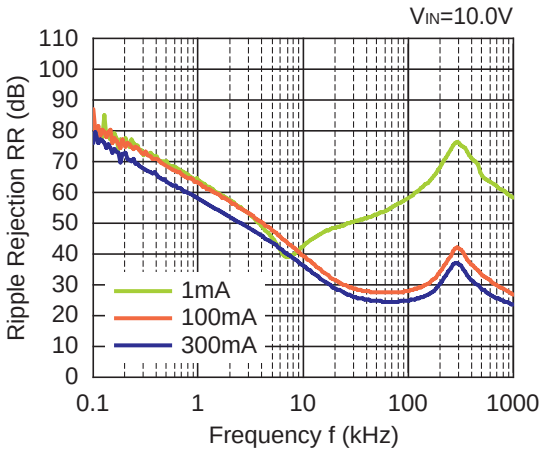

R1500x120B

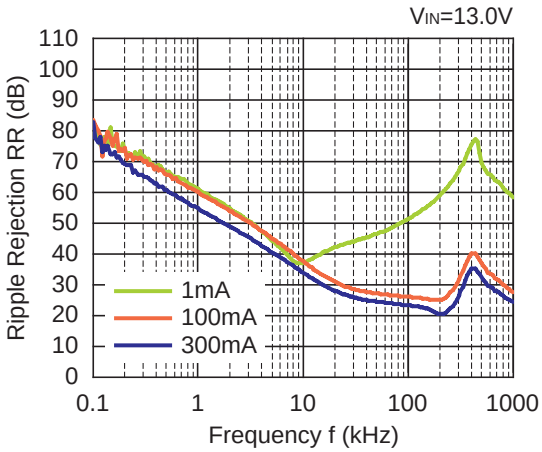

10) Input Transient Response (C1 = none, C2 = Ceramic 10 µF, I_{OUT} = 100 mA, tr = tf = 10 µs, Ta = 25°C)

R1500x030B

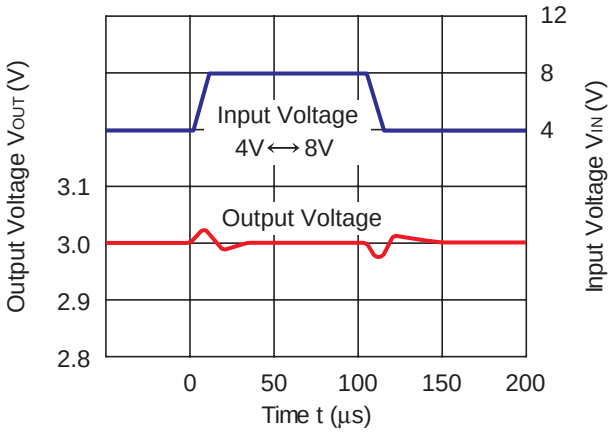

R1500x050B

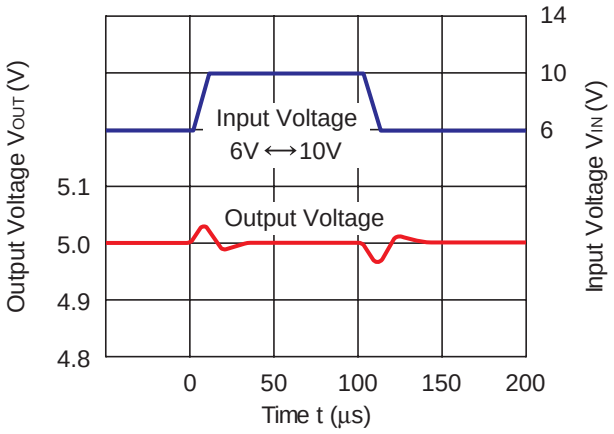

R1500x090B

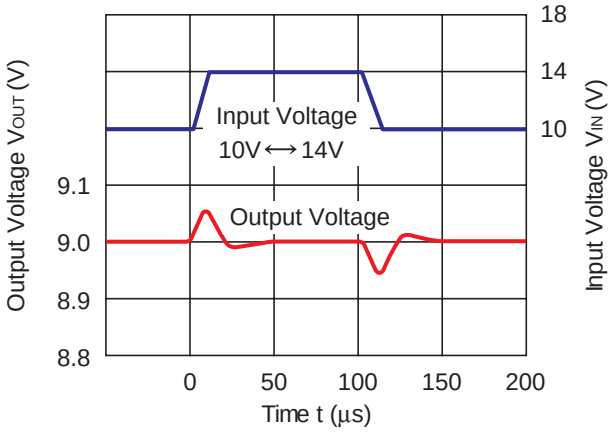

R1500x120B

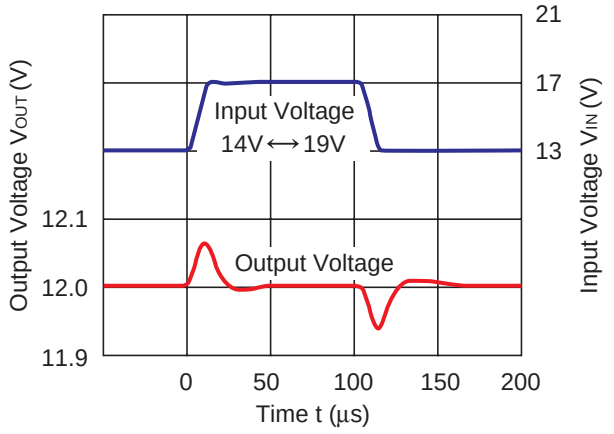

11) Load Transient Response (C1 = Ceramic 0.47 µF, C2 = Ceramic 10 µF, tr = tf = 0.5 µs, Ta = 25°C)

R1500x030B

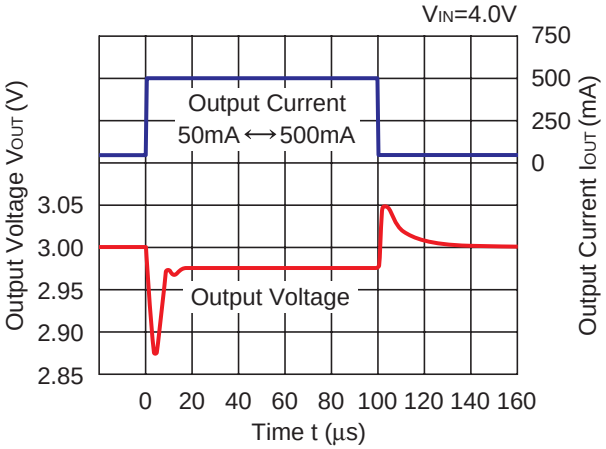

R1500x050B

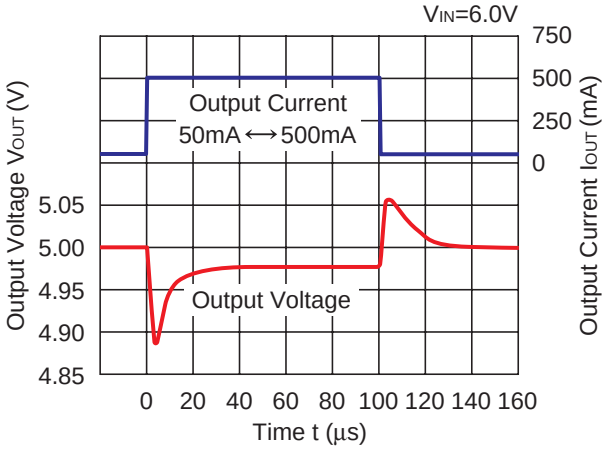

R1500x090B

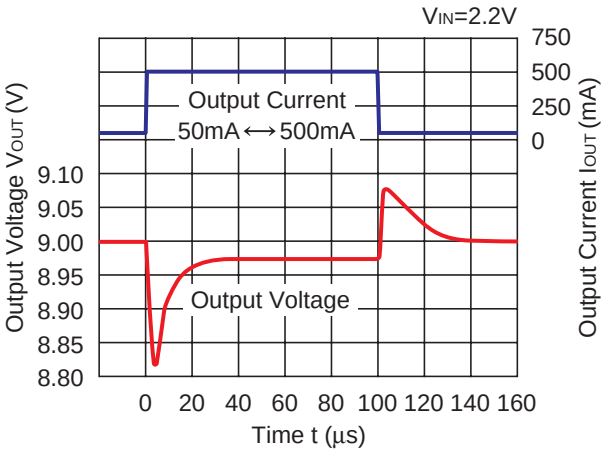

R1500x120B

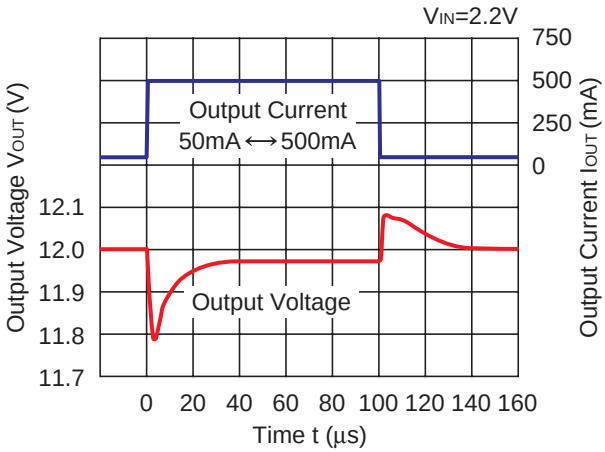

12) Turn On Speed with CE pin (C1 = Ceramic 0.47 µF, C2 = Ceramic 10 µF, Ta = 25°C)

R1500x030B

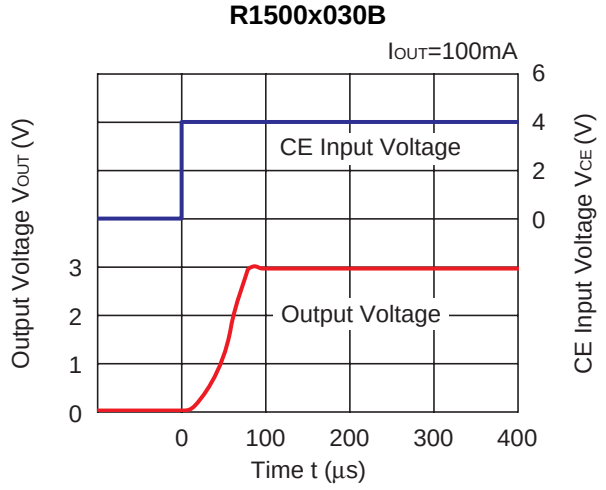

R1500x030B

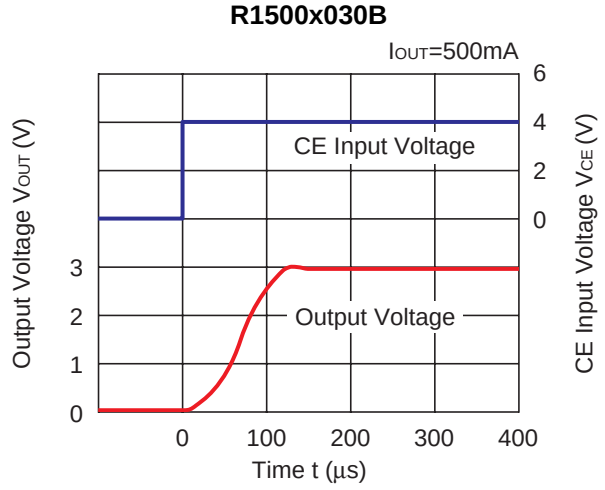

R1500x050B

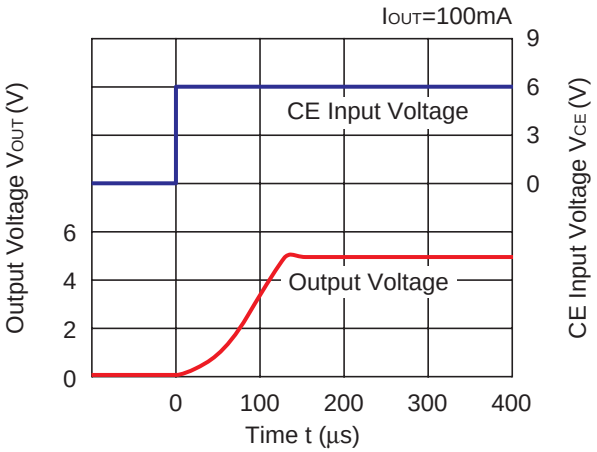

R1500x050B

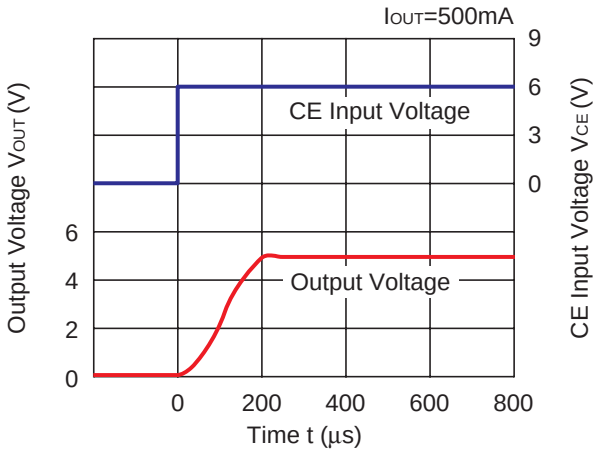

R1500x090B

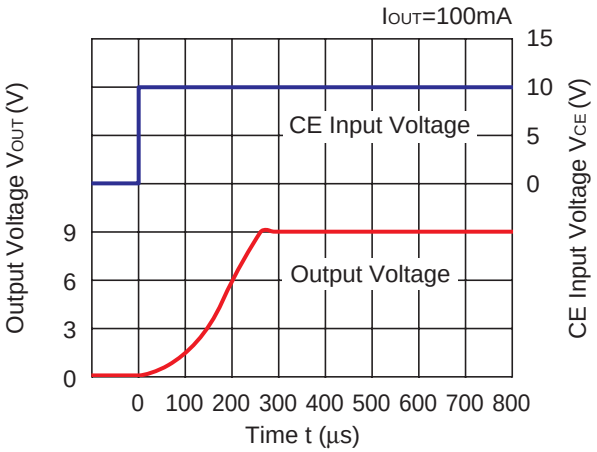

R1500x090B

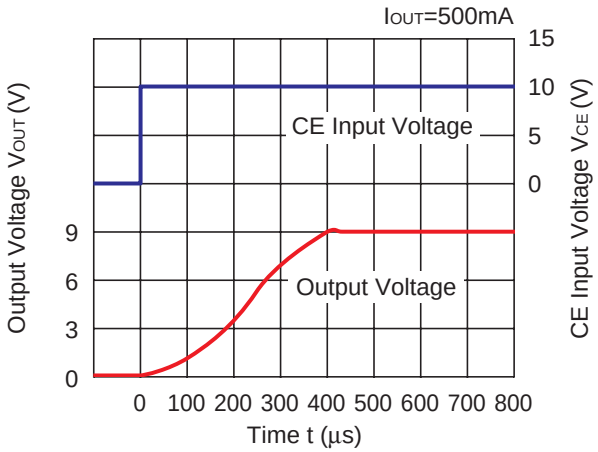

R1500x120B

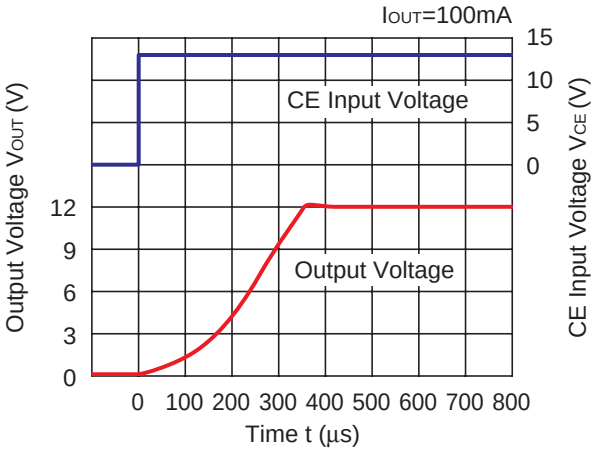

R1500x120B

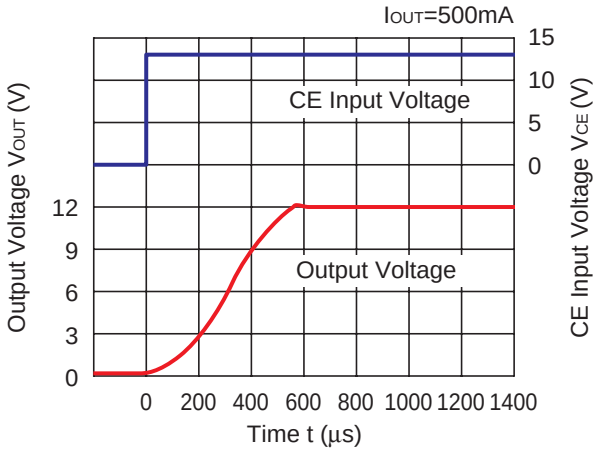

13) Turn Off Speed with CE (C1 = Ceramic 0.47 µF, C2 = Ceramic 10 µF, I_{OUT} = 500 mA, Ta = 25°C)

R1500x030B

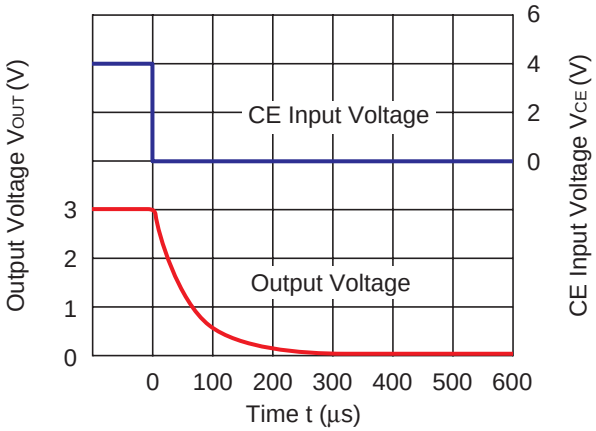

R1500x050B

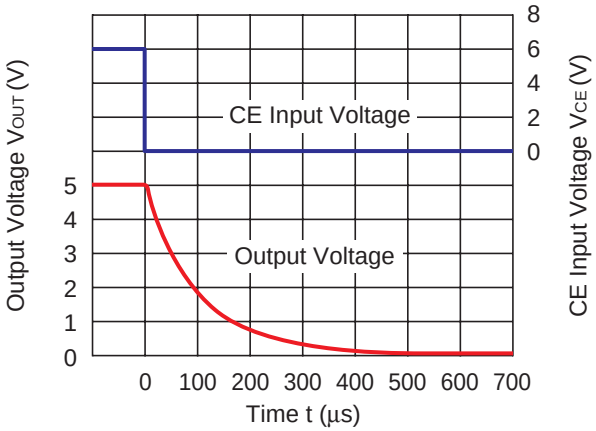

R1500x090B

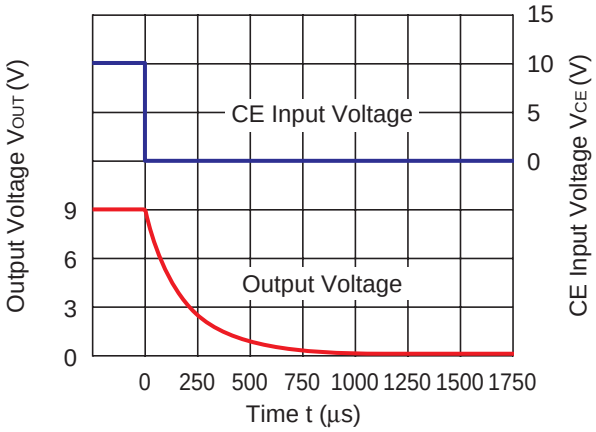

R1500x120B

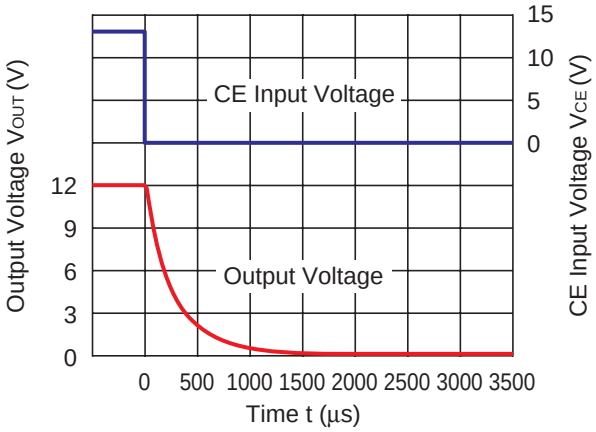

ESR vs. OUTPUT CURRENT

The relations between I_{OUT} (Output Current) and ESR of an output capacitor are shown below.
The conditions when the white noise level is under the specified certain level are marked as the hatched area in the graph.

Measurement conditions

Input Voltage : V_{OUT} + 1 V
Frequency Band : 10 Hz to 1 MHz
Temperature : −40°C to 105°C

R1500x030B

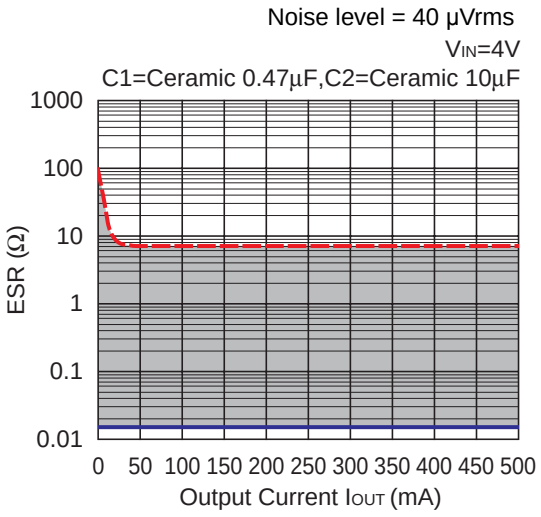

R1500x030B

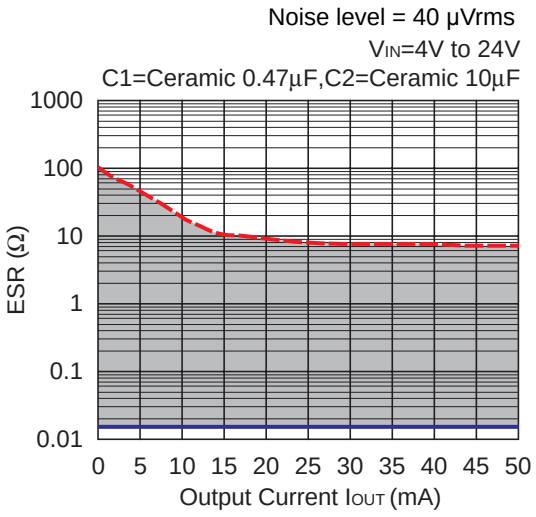

R1500x050B

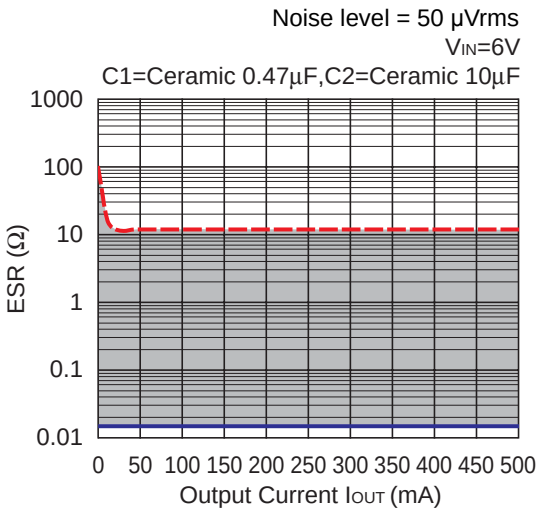

R1500x050B

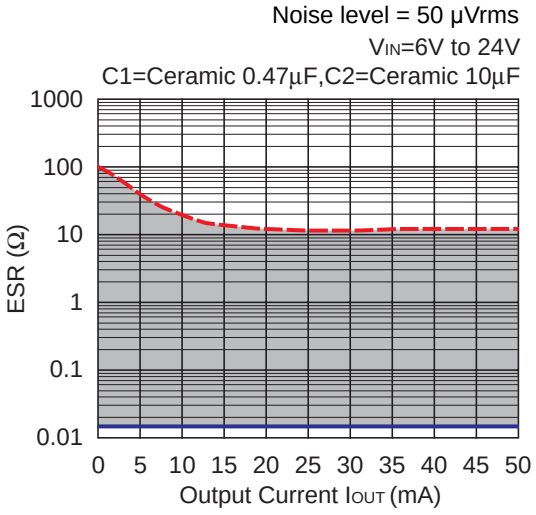

R1500x090B

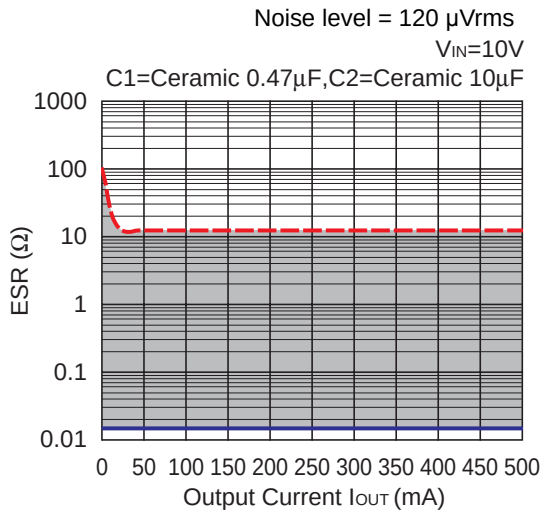

R1500x090B

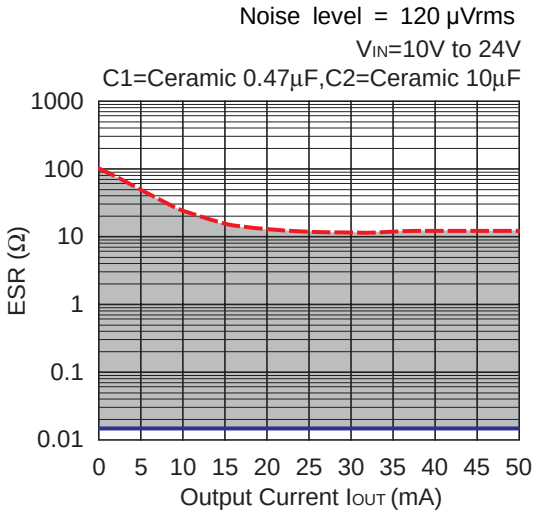

R1500x120B

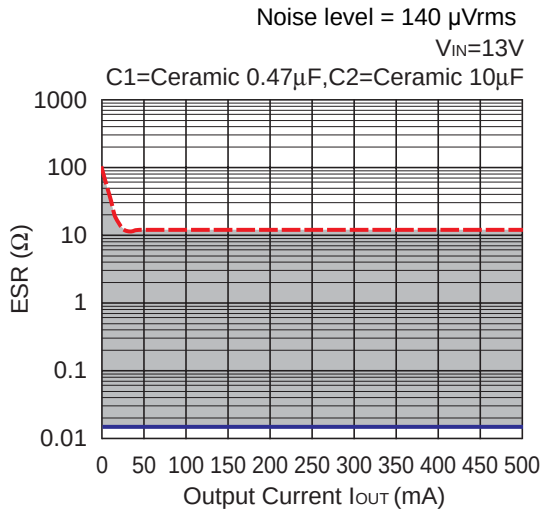

R1500x120B

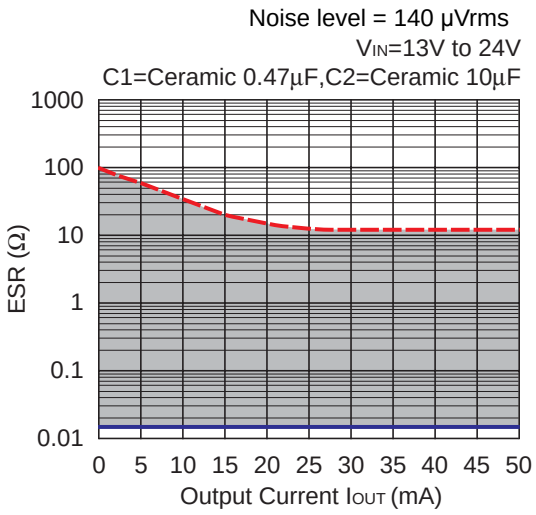

1. The products and the product specifications described in this document are subject to change or discontinuation of production without notice for reasons such as improvement. Therefore, before deciding to use the products, please refer to our sales representatives for the latest information thereon.
2. The materials in this document may not be copied or otherwise reproduced in whole or in part without the prior written consent of us.
3. This product and any technical information relating thereto are subject to complementary export controls (so-called KNOW controls) under the Foreign Exchange and Foreign Trade Law, and related politics ministerial ordinance of the law. (Note that the complementary export controls are inapplicable to any application-specific products, except rockets and pilotless aircraft, that are insusceptible to design or program changes.) Accordingly, when exporting or carrying abroad this product, follow the Foreign Exchange and Foreign Trade Control Law and its related regulations with respect to the complementary export controls.
4. The technical information described in this document shows typical characteristics and example application circuits for the products. The release of such information is not to be construed as a warranty of or a grant of license under our or any third party's intellectual property rights or any other rights.
5. The products listed in this document are intended and designed for automotive applications. Those customers intending to use a product in an application requiring extreme quality and reliability, for example, in a highly specific application where the failure or misoperation of the product could result in human injury or death should first contact us.
    - Aerospace Equipment
    - Equipment Used in the Deep Sea
    - Power Generator Control Equipment (nuclear, steam, hydraulic, etc.)
    - Life Maintenance Medical Equipment
    - Fire Alarms / Intruder Detectors
    - Vehicle Control Equipment (airplane, railroad, ship, etc.)
    - Various Safety Devices
    - Traffic control system
    - Combustion equipment

    In case your company desires to use this product for any applications other than general electronic equipment mentioned above, make sure to contact our company in advance. Note that the important requirements mentioned in this section are not applicable to cases where operation requirements such as application conditions are confirmed by our company in writing after consultation with your company.
6. We are making our continuous effort to improve the quality and reliability of our products, but semiconductor products are likely to fail with certain probability. In order to prevent any injury to persons or damages to property resulting from such failure, customers should be careful enough to incorporate safety measures in their design, such as redundancy feature, fire containment feature and fail-safe feature. We do not assume any liability or responsibility for any loss or damage arising from misuse or inappropriate use of the products.
7. The products have been designed and tested to function within controlled environmental conditions. Do not use products under conditions that deviate from methods or applications specified in this datasheet. Failure to employ the products in the proper applications can lead to deterioration, destruction or failure of the products. We shall not be responsible for any bodily injury, fires or accident, property damage or any consequential damages resulting from misuse or misapplication of the products.
8. Quality Warranty

    8-1. Quality Warranty Period

    In the case of a product purchased through an authorized distributor or directly from us, the warranty period for this product shall be one (1) year after delivery to your company. For defective products that occurred during this period, we will take the quality warranty measures described in section 8-2. However, if there is an agreement on the warranty period in the basic transaction agreement, quality assurance agreement, delivery specifications, etc., it shall be followed.

    8-2. Quality Warranty Remedies

    When it has been proved defective due to manufacturing factors as a result of defect analysis by us, we will either deliver a substitute for the defective product or refund the purchase price of the defective product.
    Note that such delivery or refund is sole and exclusive remedies to your company for the defective product.

    8-3. Remedies after Quality Warranty Period

    With respect to any defect of this product found after the quality warranty period, the defect will be analyzed by us. On the basis of the defect analysis results, the scope and amounts of damage shall be determined by mutual agreement of both parties. Then we will deal with upper limit in Section 8-2. This provision is not intended to limit any legal rights of your company.
9. Anti-radiation design is not implemented in the products described in this document.
10. The X-ray exposure can influence functions and characteristics of the products. Confirm the product functions and characteristics in the evaluation stage.
11. WLCSP products should be used in light shielded environments. The light exposure can influence functions and characteristics of the products under operation or storage.
12. Warning for handling Gallium and Arsenic (GaAs) products (Applying to GaAs MMIC, Photo Reflector). These products use Gallium (Ga) and Arsenic (As) which are specified as poisonous chemicals by law. For the prevention of a hazard, do not burn, destroy, or process chemically to make them as gas or power. When the product is disposed of, please follow the related regulation and do not mix this with general industrial waste or household waste.
13. Please contact our sales representatives should you have any questions or comments concerning the products or the technical information.

NISSHINBO

Nisshinbo Micro Devices Inc.

Official website
https://www.nisshinbo-microdevices.co.jp/en/

Purchase information
https://www.nisshinbo-microdevices.co.jp/en/buy/

ENTEGRECİ

Bu belge www.entegreci.com üzerinden sunulmaktadır.

Elektronik komponent tedarikinde Entegreci

Entegreci, Eskişehir merkezli, Türkiye geneline satış yapan bir elektronik komponent mağazasıdır. Entegreler (IC), mikrodenetleyiciler, transistörler, diyotlar, pasif elemanlar, konnektörler, modüller ve geliştirme kartları tek adetten seri üretim adetlerine kadar satılır. Ürün sayfalarında güncel stok durumunu, fiyatı ve datasheet bağlantısını bulabilirsiniz.

Parça koduyla arama

Üretici parça numarasını yazın; stok ve fiyatı hemen görün.

www.entegreci.com

Ürün kategorileri

Entegreden kapasitöre tüm elektronik komponent kategorileri.

Kategorilere göz atın

Üreticiler

Aradığınız üreticinin ürünlerini tek sayfada inceleyin.

Üreticileri görün

Toplu alım ve teklif

Listede olmayan ya da yüksek adetli parçalar için teklif isteyin.

Teklif isteyin

www.entegreci.com | **destek@entegreci.com** | **0850 305 90 34**

Entegreci is an online electronic components store based in Türkiye. Search by manufacturer part number to see stock, prices and datasheets for integrated circuits, microcontrollers, transistors, passive components and connectors, or request a quote for parts that are not listed.

Bu sayfa Entegreci tarafından eklenmiştir. Belgenin önceki sayfaları asıl yayıncısına aittir ve içeriği değiştirilmemiştir; en güncel sürüm için belgenin yayıncısına başvurun.