500 mA 36V Input Low Supply Current LDO for Automotive Applications

NO. EC-304-240422

OUTLINE

R1517x is a CMOS-based LDO that specifically designed for automotive applications featuring 500 mA output current and 36 V input voltage. In addition to a conventional regulator circuit, R1517x consists of a constant slope circuit as a soft-start function, a fold-back protection circuit, a short current limit circuit, and a thermal shutdown circuit. Besides the low supply current by CMOS, the operating temperature is −40°C to 125°C and the maximum input voltage is 36 V, the R1517x is very suitable for power source of car accessories.

R1517x supports the internal fixed output voltage type of R1517xxxxB/D/E/F, and the output voltage of R1517x001C can adjust the output voltage be set with an external resistor, and the setting range is from 2.5V to Max 20V. As for the soft-start time, R1517x is fixed internal in R1517xxxxB/D/E/F and is set to 120 µs (Typ). And the soft-start time in R1517Jxx1E/F is adjustable by external capacitors. R1517x supports the auto-discharge function at standby in R1517xxxxD/F.

R1517x is available in two packages for ultra-high wattage: HSOP-6J and TO-252-5-P2.

FEATURES

- Input Voltage Range (Maximum Rating) ····· 3.5 V to 36.0 V (50.0V)
- Operating Temperature Range ····· –40°C to 125°C
- Supply Current ····· Typ. 18 µA
- Standby Current ····· Typ. 0.1 µA
- Dropout Voltage ····· Typ. 0.35 V (I_{OUT} = 500 mA, V_{OUT} = 5.0 V)
- Output Voltage Accuracy ····· ±0.8% (V_{OUT} ≤ 5.0 V)
- Temperature-Drift Coefficient of Output Voltage ····· Typ. ±60 ppm/°C (−40°C ≤ Ta ≤ 125°C)
- Line Regulation ····· Typ. 0.01%/V
- Packages ····· HSOP-6J, TO-252-5-P2
- Output Voltage Range ····· 2.5 V/2.8 V/3.0 V/3.3 V/3.4 V/5.0 V/ 6.0 V/8.0 V/ 8.5 V/9.0 V
  R1517x001C: Adjustable from 2.5 V to 20.0 V with External Resistors.
  Feedback Voltage: 2.5 V
- Built-in Short Current Limit Circuit ····· Typ. 75 mA
- Built-in Fold-Back Protection Circuit ····· Min. 500 mA
- Built-in Thermal Shutdown Circuit ····· Typ. 160°C
- Built-in Soft-start Circuit ····· Typ.120 µs
  R1517Jxx1E/F: Adjustable Time Setting with External Capacitors.
- Usable Ceramic Capacitors ····· 0.1 µF or more
  R1517x001C: 1.0 µF or more

APPLICATIONS

- Power source for car accessories including car audio equipment, car navigation system, and ETC system.
- Power source for control units including EV inverter and charge control.

BLOCK DIAGRAMS

R1517xxxxB

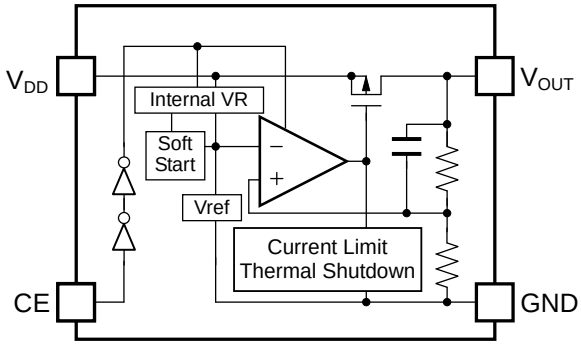

R1517x001C

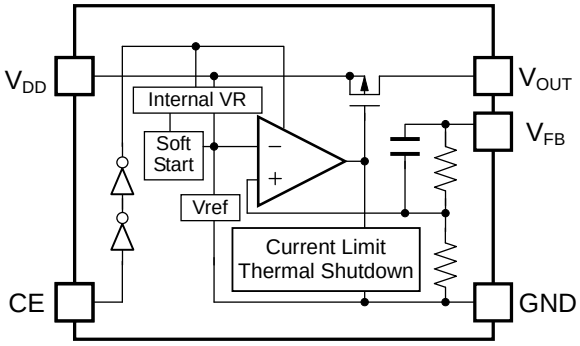

R1517xxxxD

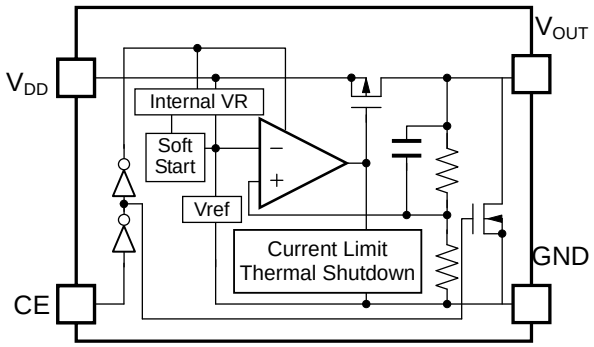

R1517Jxx1E

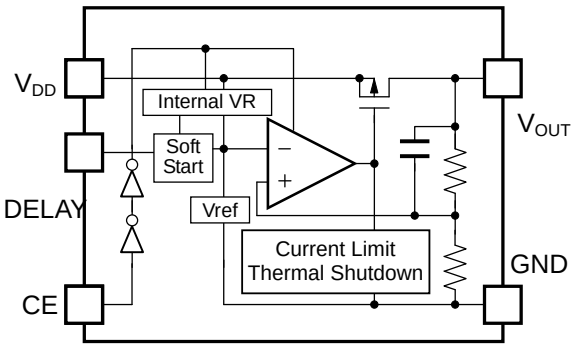

R1517Jxx1F

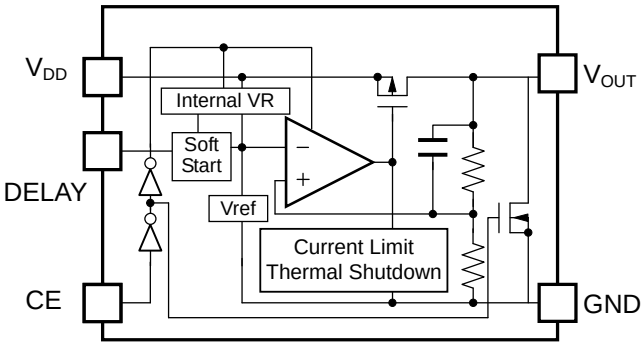

SELECTION GUIDE

The output voltage, version, and package type for this device can be selected at the user's request.

Product Name	Package	Quantity per Reel	Pb Free	Halogen Free
R1517Sxx2∗-E2-#E	HSOP-6J	1,000 pcs	Yes	Yes
R1517S001C-E2-#E				
R1517Jxx1∗-T1-#E	TO-252-5-P2	3,000 pcs	Yes	Yes
R1517J001C-T1-#E				

xx: Specify the set output voltage (V_{SET})
2.5 V (25) / 2.8 V (28) / 3.0 V (30) / 3.3 V (33) / 3.4 V (34) / 5.0 V (50) / 6.0 V (60) /
8.0 V (80) / 8.5 V (85) / 9.0 V (90)

Adjustable output voltage setting type is fixed to (00)
Note: For R1517S001C-E2-#E and R1517J001C-T1-#E (No auto-discharge function)

∗ : Specify the version with desired functions
B: No auto-discharge function
D: Auto-discharge function
E: No auto-discharge function / Adjustable soft-start time setting
F: Auto-discharge function / Adjustable soft-start time setting

Note: R1517Sxx2∗-E2-#E can provide R1517Sxx2B/D only.

: Specify Automotive Class Code

	Operating Temperature Range	Guaranteed Specs Temperature Range	Screening
A	−40°C to 125°C	25°C	High temperature
K	−40°C to 125°C	−40°C to 125°C	High and low temperature

Auto-discharge function quickly lowers the output voltage to 0 V by releasing the electrical charge in the external capacitor when the chip enable signal is switched from the active mode to the standby mode.

PIN DESCRIPTION

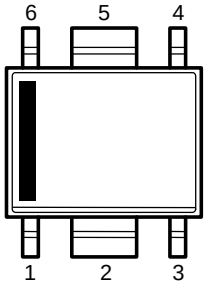

HSOP-6J

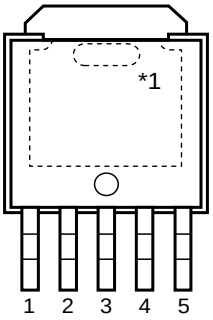

TO-252-5-P2

HSOP-6J

Pin No.	Symbol	Description	
1	V_{DD}	Input Pin	
2	GND	Ground Pin	
3	GND	Ground Pin	R1517Sxx2B/D
	V_{FB}	Feedback Pin	R1517S001C
4	CE	Chip Enable Pin, Active-high	
5	GND	Ground Pin	
6	V_{OUT}	Output Pin	

TO-252-5-P2

Pin No.	Symbol	Description	
1	V_{DD}	Input Pin	
2	NC	No Connection	R1517Jxx1B/D
	V_{FB}	Feedback Pin	R1517J001C
	DELAY	Adjustable Soft-start Time Pin	R1517Jxx1E/F
3	GND	Ground Pin	
4	CE	Chip Enable Pin, Active-high	
5	V_{OUT}	Output Pin	

*1 The tab on the bottom of the package enhances thermal performance and is electrically connected to GND (substrate level). It is recommended that the tab be connected to the ground plane on the board, or otherwise be left open.

PIN EQUIVALENT CIRCUIT DIAGRAMS

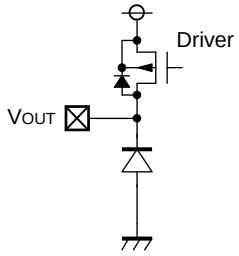

V_{OUT} Pin

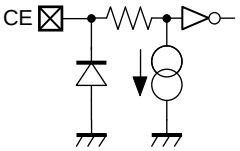

CE Pin

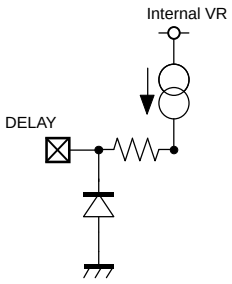

DELAY Pin (R1517Jxx1E/F)

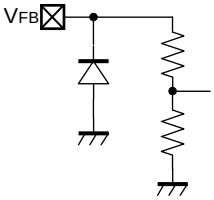

V_{FB} Pin (R1517x001C)

ABSOLUTE MAXMUM RATINGS

Symbol	Item		Rating	Unit
V_{IN}	Input Voltage		−0.3 to 50	V
V_{IN}	Peak Input Voltage[*1]		60	V
V_{CE}	Input Voltage (CE Pin)		−0.3 to 50	V
V_{FB}	Input Voltage (V_{FB} Pin)		−0.3 to 50	V
V_{OUT}	Output Voltage		−0.3 to V_{IN} + 0.3 ≤ 50	V
P_D	Power Dissipation (HSOP-6J)[*2]	Standard Land Pattern	2100	mW
		Ultra High Wattage Land Pattern	3400	
	Power Dissipation (TO-252-5-P2)[*2]	Standard Land Pattern	2350	
		Ultra High Wattage Land Pattern	4800	
Tj	Junction Temperature		−40 to 150	°C
Tstg	Storage Temperature Range		−55 to 150	°C

[*1] Duration time = 200 ms

[*2] Refer to *PACKAGE INFORMATION* for detailed information.

ABSOLUTE MAXIMUM RATINGS

Electronic and mechanical stress momentarily exceeded absolute maximum ratings may cause the permanent damage and may degrade the life time and safety for both device and system using the device in the field. The functional operation at or over these absolute maximum ratings is not assured.

RECOMMENDED OPERATING CONDITIONS

Symbol	Item	Rating	Unit
V_{IN}	Input Voltage	3.5 to 36	V
Ta	Operating Temperature Range	−40 to 125	°C

RECOMMENDED OPERATING CONDITONS

All of electronic equipment should be designed that the mounted semiconductor devices operate within the recommended operating conditions. The semiconductor devices cannot operate normally over the recommended operating conditions, even if they are used over such conditions by momentary electronic noise or surge. And the semiconductor devices may receive serious damage when they continue to operate over the recommended operating conditions.

ELECTRICAL CHARACTERISTICS

V_{IN} = V_{SET} + 1.0 V, I_{OUT} = 1 mA, C_{IN} = C_{OUT} = 0.1 µF, unless otherwise noted.
The specifications surrounded by [ ] are guaranteed by design engineering at -40°C ≤ Ta ≤ 125°C.

R1517xxxxB/D (-AE) (Ta = 25°C)

Symbol	Item	Conditions		Min.	Typ.	Max.	Unit
V_{OUT}	Output Voltage	Ta = 25°C	V_{SET} ≤ 5.0 V	×0.992		×1.008	V
			V_{SET} > 5.0 V	×0.99		×1.01	V
		−40°C ≤ Ta ≤ 125°C	V_{SET} ≤ 5.0 V	[×0.982]		[×1.018]	V
			V_{SET} > 5.0 V	[×0.98]		[×1.02]	V
ΔV_{OUT} /ΔI_{OUT}	Load Regulation	V_{IN} = V_{SET} + 2.0 V 1mA ≤ I_{OUT} ≤ 250 mA		[−15]	3	[25]	mV
		V_{IN} = V_{SET} + 2.0 V 1mA ≤ I_{OUT} ≤ 500 mA		[−25]	5	[40]	mV
V_{DIF}	Dropout Voltage	I_{OUT} = 500 mA		Refer to Product-specific Electrical Characteristics.			
I_{SS}	Supply Current	I_{OUT} = 0 mA			18	[36]	µA
Istandby	Standby Current	V_{CE} = 0 V			0.1	[2.0]	µA
ΔV_{OUT} /ΔV_{IN}	Line Regulation	V_{SET} + 0.5 V ≤ V_{IN} ≤ 36 V, Under the condition of V_{IN} ≥ 3.5 V			0.01	[0.02]	%/V
I_{LIM}	Output Current Limit	V_{IN} = V_{SET} +2.0 V		[500]	750		mA
I_{SC}	Short Current Limit	V_{IN} =5.0 V, V_{OUT} = 0 V			75		mA
I_{PD}	CE Pull-down Current	V_{CE} = 5.0 V			0.2	[0.6]	µA
		V_{CE} = 36 V			0.5	[1.3]	µA
t_{D1}	Soft-start Time 1				120		µs
V_{CEH}	CE Input Voltage "H"			[2.2]		[36]	V
V_{CEL}	CE Input Voltage "L"			[0]		[1.0]	V
T_{TSD}	Thermal Shutdown Temperature	Junction Temperature		[150]	160		°C
T_{TSR}	Thermal Shutdown Released Temperature	Junction Temperature		[125]	135		°C
R_{LOW}	Low Output Nch Tr. ON Resistance (R1517xxxxD)	V_{IN} = 14.0 V, V_{CE} = 0 V		[1.0]	3.2	[5.0]	kΩ

All test items listed under Electrical Characteristics are done under the pulse load condition (Tj ≈ Ta = 25°C) except for Soft-start Time 1.

V_{IN} = V_{FB} (= 2.5 V) + 1.0 V = 3.5 V, I_{OUT} = 1 mA, C_{IN} = 0.1 µF, C_{OUT} = 1.0 µF, unless otherwise noted.
The specifications surrounded by ☐ are guaranteed by design engineering at -40°C ≤ Ta ≤ 125°C.

R1517x001C (-AE) (Ta = 25°C)

Symbol	Item	Conditions	Min.	Typ.	Max.	Unit
V_{FB}	Feedback Voltage	Ta = 25°C	2.480		2.520	V
		−40°C ≤ Ta ≤ 125°C	2.455		2.545	V
ΔV_{OUT} /ΔI_{OUT}	Load Regulation	V_{IN} = 4.5 V 1mA ≤ I_{OUT} ≤ 250 mA	−10	3	10	mV
		V_{IN} = 4.5 V 1 mA ≤ I_{OUT} ≤ 500 mA	−20	5	20	mV
V_{DIF}	Dropout Voltage	I_{OUT} = 500 mA			1.0	V
I_{SS}	Supply Current	I_{OUT} = 0 mA		18	36	µA
Istandby	Standby Current	V_{CE} = 0 V		0.1	2.0	µA
ΔV_{OUT} /ΔV_{IN}	Line Regulation	3.5 V ≤ V_{IN} ≤ 36 V		0.01	0.02	%/V
I_{LIM}	Output Current Limit	V_{IN} = 4.5 V	500	750		mA
I_{SC}	Short Current Limit	V_{IN} = 5.0 V, V_{OUT} = V_{FB} = 0 V		75		mA
I_{PD}	CE Pull-down Current	V_{CE} = 5.0 V		0.2	0.6	µA
		V_{CE} = 36 V		0.5	1.3	µA
t_{D1}	Soft-start Time 1			120		µs
V_{CEH}	CE Input Voltage "H"		2.2		36	V
V_{CEL}	CE Input Voltage "L"		0		1.0	V
T_{TSD}	Thermal Shutdown Temperature	Junction Temperature	150	160		°C
T_{TSR}	Thermal Shutdown Released Temperature	Junction Temperature	125	135		°C

V_{OUT} = V_{FB} = 2.5 V (excluding short circuit current)
All test items listed under Electrical Characteristics are done under the pulse load condition (Tj ≈ Ta = 25°C) except for Soft-start Time 1.

V_{IN} = V_{SET} + 1.0 V, I_{OUT} = 1 mA, C_{IN} = C_{OUT} = 0.1 µF, unless otherwise noted.
The specifications surrounded by ☐ are guaranteed by design engineering at -40°C ≤ Ta ≤ 125°C.

R1517Jxx1E/F (-AE) (Ta = 25°C)

Symbol	Item	Conditions		Min.	Typ.	Max.	Unit
V_{OUT}	Output Voltage	Ta = 25°C	V_{SET} ≤ 5.0 V	×0.992		×1.008	V
			V_{SET} > 5.0 V	×0.99		×1.01	V
		−40°C ≤ Ta ≤ 125°C	V_{SET} ≤ 5.0 V	×0.982		×1.018	V
			V_{SET} > 5.0 V	×0.98		×1.02	V
ΔV_{OUT} /ΔI_{OUT}	Load Regulation	V_{IN} = V_{SET} +2.0 V 1 mA ≤ I_{OUT} ≤ 250 mA		−15	3	25	mV
		V_{IN} = V_{SET} +2.0 V 1 mA ≤ I_{OUT} ≤ 500 mA		−25	5	40	mV
V_{DIF}	Dropout Voltage	I_{OUT} = 500 mA		Refer to Product-specific Electrical Characteristics.			
I_{SS}	Supply Current	I_{OUT} = 0 mA			18	36	µA
Istandby	Standby Current	V_{CE} = 0 V			0.1	2.0	µA
ΔV_{OUT} /ΔV_{IN}	Line Regulation	V_{SET} +0.5 V ≤ V_{IN} ≤ 36 V, Under the condition of V_{IN} ≥ 3.5 V			0.01	0.02	%/V
I_{LIM}	Output Current Limit	V_{IN} = V_{SET} +2.0 V		500	750		mA
I_{SC}	Short Current Limit	V_{IN} = 5.0 V, V_{OUT} = 0 V			75		mA
I_{PD}	CE Pull-down Current	V_{CE} = 5.0 V			0.2	0.6	µA
		V_{CE} = 36 V			0.5	1.3	µA
I_{DELAY}	DELAY Current	DELAY = GND		1.5	2.5	3.5	µA
t_{D1}	Soft-start Time 1	DELAY = OPEN			26		µs
t_{D2}	Soft-start Time 2	DELAY = 0.001 µF		210	290	415	µs
V_{CEH}	CE Input Voltage "H"			2.2		36	V
V_{CEL}	CE Input Voltage "L"			0		1.0	V
T_{TSD}	Thermal Shutdown Temperature	Junction Temperature		150	160		°C
T_{TSR}	Thermal Shutdown Released Temperature	Junction Temperature		125	135		°C
R_{LOW}	Low Output Nch Tr. ON Resistance (R1517Jxx1F)	V_{IN} = 14.0 V, V_{CE} = 0 V		1.0	3.2	5.0	kΩ

All test items listed under Electrical Characteristics are done under the pulse load condition (Tj ≈ Ta = 25°C) except for Soft-start Time 1 and Soft-start Time 2.

Product-specific Electrical Characteristics

The specifications surrounded by [ ] are guaranteed by design engineering at -40°C ≤ Ta ≤ 125°C.

R1517Jxx1B/D/E/F (-AE), R1517Sxx2B/D (-AE) (Ta = 25°C)

Product Name	V_{OUT} [V] (Ta = 25°C)			V_{OUT} [V] (−40 ≤ Ta ≤ 125°C)			V_{DIF} [V]	
	Min.	Typ.	Max.	Min.	Typ.	Max.	Typ.	Max.
R1517x25xx	2.480	2.500	2.520	[2.455]	2.500	[2.545]		
R1517x28xx	2.778	2.800	2.822	[2.750]	2.800	[2.850]		[1.00]
R1517x30xx	2.977	3.000	3.024	[2.946]	3.000	[3.054]		
R1517x33xx	3.274	3.300	3.326	[3.241]	3.300	[3.359]	0.45	[0.77]
R1517x34xx	3.373	3.400	3.427	[3.339]	3.400	[3.461]		
R1517x50xx	4.960	5.000	5.040	[4.910]	5.000	[5.090]		
R1517x60xx	5.940	6.000	6.060	[5.760]	6.000	[6.120]	0.35	[0.62]
R1517x80xx	7.920	8.000	8.080	[7.840]	8.000	[8.160]		
R1517x85xx	8.415	8.500	8.585	[8.330]	8.500	[8.670]		
R1517x90xx	8.910	9.000	9.090	[8.820]	9.000	[9.180]	0.30	[0.50]

V_{IN} = V_{SET} + 1.0 V, I_{OUT} = 1 mA, C_{IN} = C_{OUT} = 0.1 µF, unless otherwise noted.

R1517xxxxB/D (-KE) (−40 ≤ Ta ≤ 125°C)

Symbol	Item	Conditions		Min.	Typ.	Max.	Unit
V_{OUT}	Output Voltage	Ta = 25°C	V_{SET} ≤ 5.0 V	×0.992		×1.008	V
			V_{SET} > 5.0 V	×0.99		×1.01	V
		−40°C ≤ Ta ≤ 125°C	V_{SET} ≤ 5.0 V	×0.982		×1.018	V
			V_{SET} > 5.0 V	×0.98		×1.02	V
ΔV_{OUT} /ΔI_{OUT}	Load Regulation	V_{IN} = V_{SET} +2.0 V 1 mA ≤ I_{OUT} ≤ 250 mA		−15	3	25	mV
		V_{IN} = V_{SET} +2.0 V 1 mA ≤ I_{OUT} ≤ 500 mA		−25	5	40	mV
V_{DIF}	Dropout Voltage	I_{OUT} = 500 mA		Refer to Product-specific Electrical Characteristics.			
I_{SS}	Supply Current	I_{OUT} = 0 mA			18	36	µA
Istandby	Standby Current	V_{CE} = 0 V			0.1	2.0	µA
ΔV_{OUT} /ΔV_{IN}	Line Regulation	V_{SET} +0.5 V ≤ V_{IN} ≤ 36 V, Under the condition of V_{IN} ≥ 3.5 V			0.01	0.02	%/V
I_{LIM}	Output Current Limit	V_{IN} = V_{SET} +2.0 V		500	750	1000	mA
I_{SC}	Short Current Limit	V_{IN} = 5.0 V, V_{OUT} = 0 V		50	75	100	mA
I_{PD}	CE Pull-down Current	V_{CE} = 5.0 V			0.2	0.6	µA
		V_{CE} = 36 V			0.5	1.3	µA
V_{CEH}	CE Input Voltage "H"			2.2		36	V
V_{CEL}	CE Input Voltage "L"			0		1.0	V
T_{TSD}	Thermal Shutdown Temperature	Junction Temperature		150	160		°C
T_{TSR}	Thermal Shutdown Released Temperature	Junction Temperature		125	135		°C
R_{LOW}	Low Output Nch Tr. ON Resistance (R1517xxxxD)	V_{IN} = 14.0 V, V_{CE} = 0 V		1.0	3.2	5.0	kΩ

V_{IN} = V_{FB} (= 2.5 V) + 1.0 V = 3.5 V, I_{OUT} = 1 mA, C_{IN} = 0.1 µF, C_{OUT} = 1.0 µF, unless otherwise noted.

R1517x001C (-KE) (−40 ≤ Ta ≤ 125°C)

Symbol	Item	Conditions	Min.	Typ.	Max.	Unit
V_{FB}	Feedback Voltage	Ta = 25°C	2.480		2.520	V
		−40°C ≤ Ta ≤ 125°C	2.455		2.545	V
ΔV_{OUT} /ΔI_{OUT}	Load Regulation	V_{IN} = 4.5 V 1 mA ≤ I_{OUT} ≤ 250 mA	−10	3	10	mV
		V_{IN} = 4.5 V 1mA ≤ I_{OUT} ≤ 500 mA	−20	5	20	mV
V_{DIF}	Dropout Voltage	I_{OUT} = 500 mA			1.0	V
I_{SS}	Supply Current	I_{OUT} = 0 mA		18	36	µA
Istandby	Standby Current	V_{CE} = 0 V		0.1	2.0	µA
ΔV_{OUT} /ΔV_{IN}	Line Regulation	3.5 V ≤ V_{IN} ≤ 36 V		0.01	0.02	%/V
I_{LIM}	Output Current Limit	V_{IN} = 4.5 V	500	750	1000	mA
I_{SC}	Short Current Limit	V_{IN} = 5.0 V, V_{OUT} = V_{FB} = 0 V	50	75	100	mA
I_{PD}	CE Pull-down Current	V_{CE} = 5.0 V		0.2	0.6	µA
		V_{CE} = 36 V		0.5	1.3	µA
V_{CEH}	CE Input Voltage "H"		2.2		36	V
V_{CEL}	CE Input Voltage "L"		0		1.0	V
T_{TSD}	Thermal Shutdown Temperature	Junction Temperature	150	160		°C
T_{TSR}	Thermal Shutdown Released Temperature	Junction Temperature	125	135		°C

V_{OUT} = V_{FB} = 2.5 V (excluding short circuit current)

V_{IN} = V_{SET} + 1.0 V, I_{OUT} = 1 mA, C_{IN} = C_{OUT} = 0.1 µF, unless otherwise noted.

R1517Jxx1E/F(-KE) (−40 ≤ Ta ≤ 125°C)

Symbol	Item	Conditions		Min.	Typ.	Max.	Unit
V_{OUT}	Output Voltage	Ta = 25°C	V_{SET} ≤ 5.0 V	×0.992		×1.008	V
			V_{SET} > 5.0 V	×0.99		×1.01	V
		−40°C ≤ Ta ≤ 125°C	V_{SET} ≤ 5.0 V	×0.982		×1.018	V
			V_{SET} > 5.0 V	×0.98		×1.02	V
ΔV_{OUT} /ΔI_{OUT}	Load Regulation	V_{IN} = V_{SET} + 2.0 V 1 mA ≤ I_{OUT} ≤ 250 mA		−15	3	25	mV
		V_{IN} = V_{SET} + 2.0 V 1 mA ≤ I_{OUT} ≤ 500 mA		−25	5	40	mV
V_{DIF}	Dropout Voltage	I_{OUT} = 500 mA		Refer to Product-specific Electrical Characteristics.			
I_{SS}	Supply Current	I_{OUT} = 0 mA			18	36	µA
Istandby	Standby Current	V_{CE} = 0 V			0.1	2.0	µA
ΔV_{OUT} /ΔV_{IN}	Line Regulation	V_{SET} + 0.5 V ≤ V_{IN} ≤ 36 V, Under the condition of V_{IN} ≥ 3.5 V			0.01	0.02	%/V
V_{IN}	Input Voltage			3.5		36	V
I_{LIM}	Output Current Limit	V_{IN} = V_{SET} + 2.0 V		500	750	1000	mA
I_{SC}	Short Current Limit	V_{IN} = 5.0 V, V_{OUT} = 0 V		50	75	100	mA
I_{PD}	CE Pull-down Current	V_{CE} = 5.0 V			0.2	0.6	µA
		V_{CE} = 36 V			0.5	1.3	µA
I_{DELAY}	DELAY Current	DELAY = GND		1.5	2.5	3.5	µA
V_{CEH}	CE Input Voltage "H"			2.2		36	V
V_{CEL}	CE Input Voltage "L"			0		1.0	V
T_{TSD}	Thermal Shutdown Temperature	Junction Temperature		150	160		°C
T_{TSR}	Thermal Shutdown Released Temperature	Junction Temperature		125	135		°C
R_{LOW}	Low Output Nch Tr. ON Resistance (R1517Jxx1F)	V_{IN} = 14.0 V, V_{CE} = 0 V		1.0	3.2	5.0	kΩ

Product-specific Electrical Characteristics

R1517Jxx1B/D/E/F (-KE), R1517Sxx2B/D (-KE) (−40 ≤ Ta ≤ 125°C)

Product Name	V_{OUT} [V] (Ta = 25°C)			V_{OUT} [V] (−40 ≤ Ta ≤ 125°C)			V_{DIF} [V]	
	Min.	Typ.	Max.	Min.	Typ.	Max.	Typ.	Max.
R1517x25xx	2.480	2.500	2.520	2.455	2.500	2.545		1.00
R1517x28xx	2.778	2.800	2.822	2.750	2.800	2.850		
R1517x30xx	2.977	3.000	3.024	2.946	3.000	3.054		
R1517x33xx	3.274	3.300	3.326	3.241	3.300	3.359	0.45	0.77
R1517x34xx	3.373	3.400	3.427	3.339	3.400	3.461		
R1517x50xx	4.960	5.000	5.040	4.910	5.000	5.090	0.35	0.62
R1517x60xx	5.940	6.000	6.060	5.760	6.000	6.120		
R1517x80xx	7.920	8.000	8.080	7.840	8.000	8.160		
R1517x85xx	8.415	8.500	8.585	8.330	8.500	8.670	0.30	0.50
R1517x90xx	8.910	9.000	9.090	8.820	9.000	9.180		

TYPICAL APPLICATION

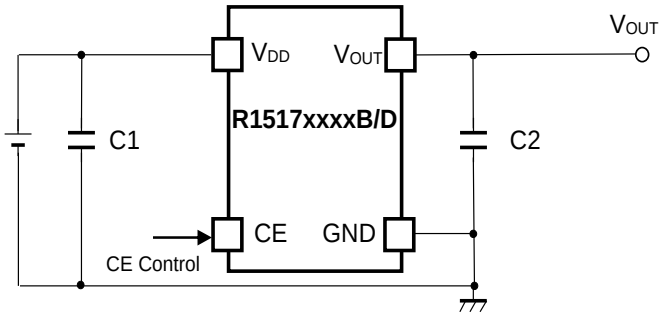

R1517xxxxB/D Typical Application

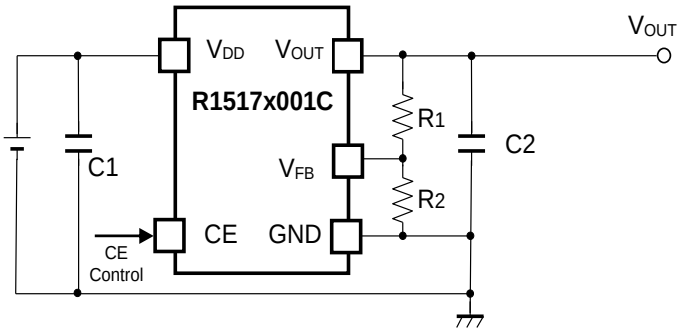

R1517x001C Typical Application

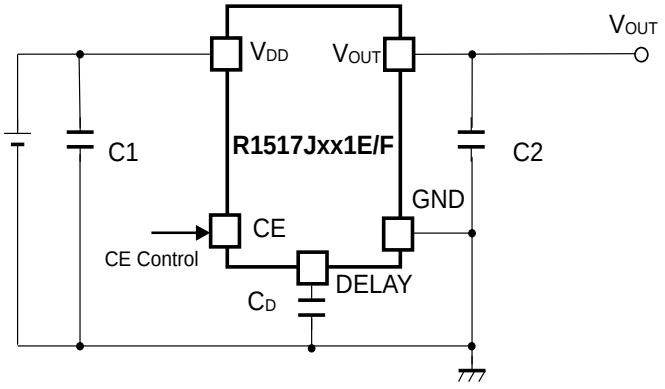

R1517Jxx1E/F Typical Application

External Components:

Symbol	Description
R1517xxxxB/D/E/F	
C1 (C_{IN})	0.1µF (Ceramic)
C2 (C_{OUT})	0.1µF (Ceramic)
R1517x001C	
C1 (C_{IN})	0.1µF (Ceramic)
C2 (C_{OUT})	1.0µF (Ceramic)

TECHNICAL NOTES

Phase Compensation

In LDO regulators, phase compensation is provided to secure stable operation even when the load current is varied. For this purpose, use the capacitor C2 of 0.1 µF or more (R1517xxxxB/D/E/F) / 1.0 µF or more (R1517x001C).

When using a tantalum type capacitor and the ESR (Equivalent Series Resistance) value is large, the output might be unstable. Evaluate the circuit including consideration of frequency characteristics.

For the externally adjustable output voltage type (R1517x001C), use 10 kΩ or lower resistance R2.

PCB Layout

Ensure the V_{DD} and GND lines are sufficiently robust. If their impedance is too high, noise pickup or unstable operation may result. Connect 0.1 µF or more of the capacitor C1 between the V_{DD} and GND, and as close as possible to the pins.

In addition, connect the capacitor C2 between V_{OUT} and GND, and as close as possible to the pins.

TYPICAL APPLICATION FOR IC CHIP BREAKDOWN PREVENTION

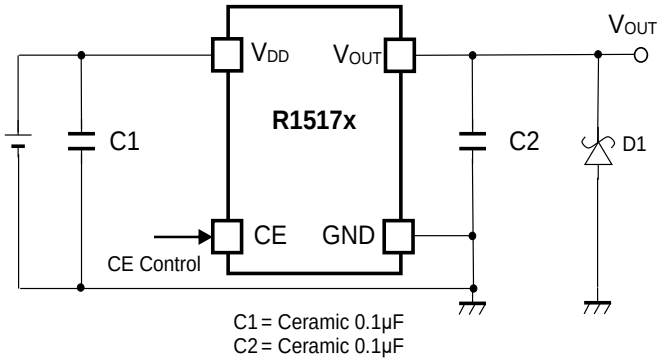

When a sudden surge of electrical current travels along the V_{OUT} pin and GND due to a short-circuit, electrical resonance of a circuit involving an output capacitor (C2) and a short circuit inductor generates a negative voltage and may damage the device or the load devices. Connecting a schottky diode (D1) between the V_{OUT} pin and GND has the effect of preventing damage to them.

OPERATION DESCRIPTION

Thermal Shutdown Function

Thermal shutdown function is included in this device. If the junction temperature is more than or equal to 160°C (Typ.), the operation of the regulator would stop. After that, when the junction temperature is less than or equal to 135°C (Typ.), the operation of the regulator would restart. Unless the cause of rising temperature is removed, the regulator repeats on and off, and output waveform would be like consecutive pulses.

Adjustable Output Voltage Setting (R1517x001C)

The output voltage of R1517x001C can be adjusted by using the external divider resistors (R1, R2). By using the following equation, the output voltage (V_{OUT}) can be determined. The voltage which is fixed inside the IC is described as V_{FB}.

$$V_{OUT} = V_{FB} \times ((R1 + R2) / R2)$$

Recommended Range: 2.5 V ≤ V_{OUT} ≤ 20.0 V

V_{FB} = 2.5 V

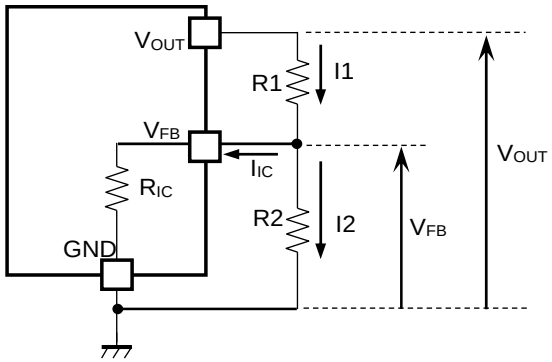

Output Voltage Adjustment Using External Divider Resistors (R1, R2)

R_{IC} of the R1517x001C is approximately Typ. 1.35 MΩ (Ta=25°C, guaranteed by design engineering). For better accuracy, setting R1 << R_{IC} reduces errors. The resistance value for R2 should be set to 10 kΩ or lower. It is easily affected by noises when setting the value of R1 and R2 larger, which makes the impedance of V_{FB} pin larger.

R_{IC} could be affected by the temperature, therefore evaluate the circuit taking the actual conditions of use into account when deciding the resistance values for R1 and R2.

Soft-start Function

R1517x is equipped with a constant slope circuit, which achieves a soft-start function. This circuit allows the output voltage to start up gradually when the CE is turned on. The constant slope circuit minimizes the inrush current at the start-up and also prevents the overshoot of the output voltage. For R1517xxxxB/C/D, the capacitor to create the start-up slope is built in this device that does not require any external components. The start-up time and the start-up slope angle are fixed inside the device. In R1517Jxx1E/F, the soft-start time is adjustable by inserting the external capacitor to DELAY pin. By using the following equation, the relation between the soft-start time t_D [s] and DELAY pin capacitor C_D [F] is determined.

$$t_D = ((C_D + 90 \times 10^{-12}) / I_{DELAY}) \times 0.73$$

When the capacitor C_D is not used in R1517Jxx1E/F, use the DELAY pin as OPEN. At that time, C_D = 0 in the above equation, therefore the start-up time is about 26 µs. However, be sure to consider approximately 50 µs of CE delay time.

The capacity (C_D) of the DELAY pin is discharged when V_{IN} is input and CE = L. If the C_D is restarted without being discharged, the soft start time may be shorter than the set time.

Conventional Inrush Current Limit Circuit

(Diagrammatic sketch)

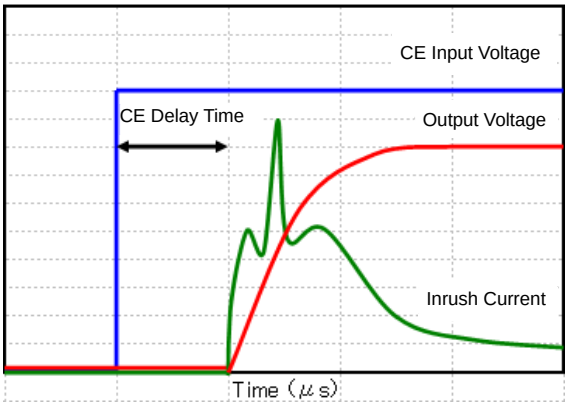

Constant Slope Circuit

(Diagrammatic sketch)

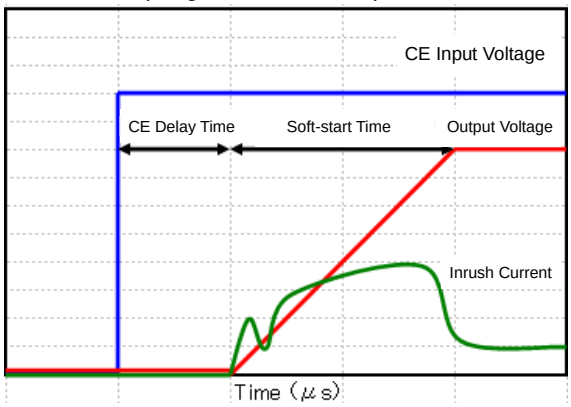

PACKAGE INFORMATION

POWER DISSIPATION (HSOP-6J)

The power dissipation of the package is dependent on PCB material, layout, and environmental conditions. The following conditions are used in this measurement.

Measurement Conditions

	Ultra-high Wattage Land Pattern	Standard Land Pattern
Environment	Mounting on Board (Wind Velocity = 0 m/s)	Mounting on Board (Wind Velocity = 0 m/s)
Board Material	Glass Cloth Epoxy Plastic (Four-layer Board)	Glass Cloth Epoxy Plastic (Double-sided Board)
Board Dimensions	76.2 mm × 114.3 mm × 0.8 mm	50 mm × 50 mm × 1.6 mm
Copper Ratio	96%	50%
Through-holes	ϕ 0.3 mm × 28 pcs	ϕ 0.5 mm × 24 pcs

Measurement Result (Ta = 25°C, Tjmax = 150°C)

	Ultra-high Wattage Land Pattern	Standard Land Pattern	Free Air
Power Dissipation	3400 mW	2100 mW	675 mW
Thermal Resistance	37°C/W	59°C/W	185°C/W

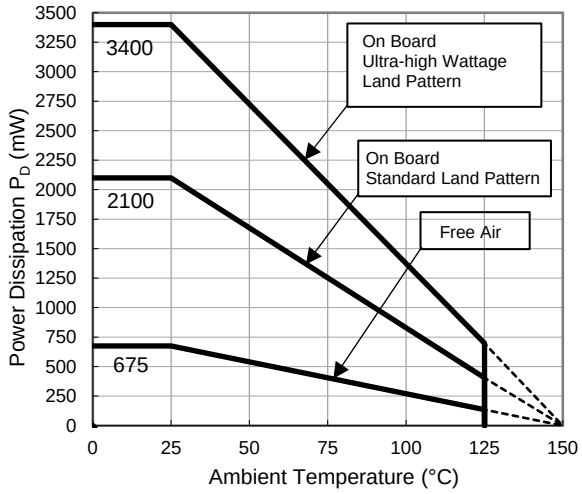

Power Dissipation vs. Ambient Temperature

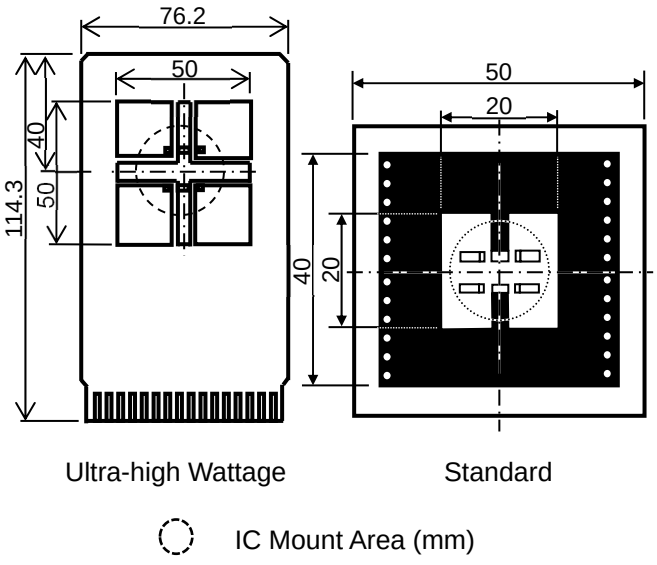

Measurement Board Pattern

PACKAGE DIMENSIONS (HSOP-6J)

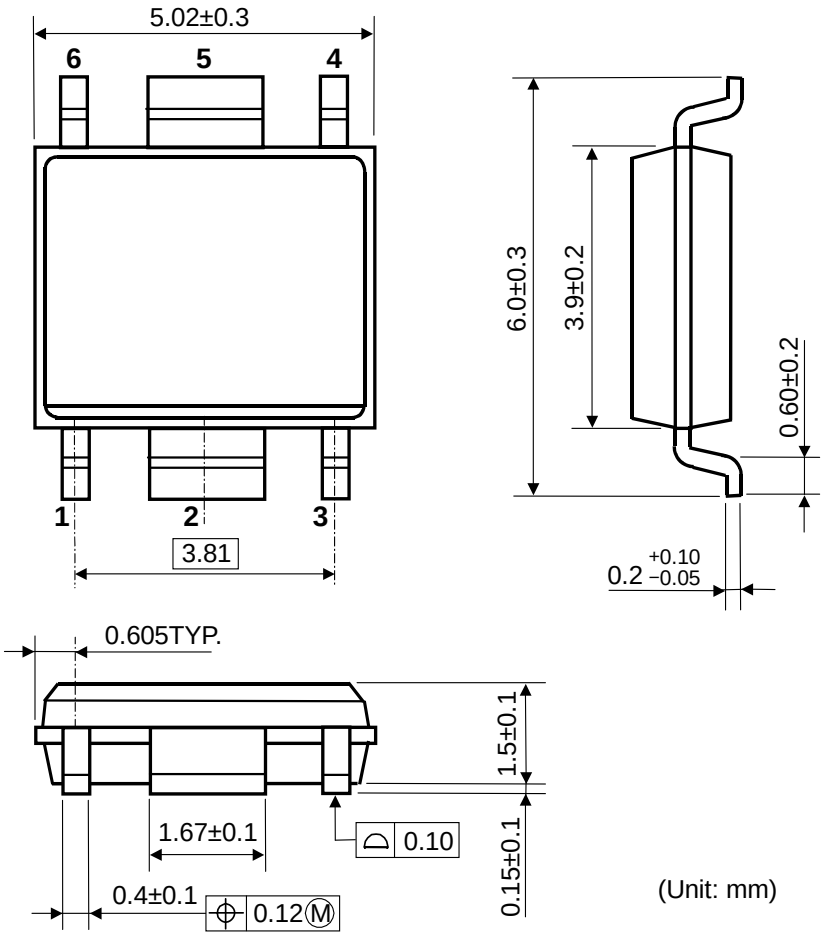

HSOP-6J Package Dimensions

MARK SPECIFICATION (HSOP-6J)

①②③④: Product Code … **Refer to *R1517S MARK SPECIFICATION TABLE***

⑤⑥: Lot Number … Alphanumeric Serial Number

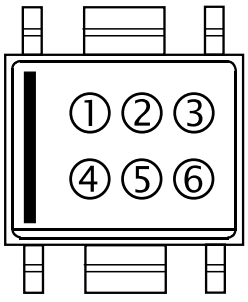

HSOP-6J Mark Specification

R1517S MARK SPECIFICATION TABLE (HSOP-6J)

R1517Sxx2B

Product Name	①②③④	V_{SET}
R1517S252B	**V 6 2 5**	2.5 V
R1517S282B	**V 6 2 8**	2.8 V
R1517S302B	**V 6 3 0**	3.0 V
R1517S332B	**V 6 3 3**	3.3 V
R1517S342B	**V 6 3 4**	3.4 V
R1517S502B	**V 6 5 0**	5.0 V
R1517S602B	**V 6 6 0**	6.0 V
R1517S802B	**V 6 8 0**	8.0 V
R1517S852B	**V 6 8 5**	8.5 V
R1517S902B	**V 6 9 0**	9.0 V

R1517Sxx2D

Product Name	①②③④	V_{SET}
R1517S252D	**V 7 2 5**	2.5 V
R1517S282D	**V 7 2 8**	2.8 V
R1517S302D	**V 7 3 0**	3.0 V
R1517S332D	**V 7 3 3**	3.3 V
R1517S342D	**V 7 3 4**	3.4 V
R1517S502D	**V 7 5 0**	5.0 V
R1517S602D	**V 7 6 0**	6.0 V
R1517S802D	**V 7 8 0**	8.0 V
R1517S852D	**V 7 8 5**	8.5 V
R1517S902D	**V 7 9 0**	9.0 V

R1517S001C (Adjustable Output Voltage Setting Type)

Product Name	①②③④	V_{SET}
R1517S001C	**V 2 0 1**	—

POWER DISSIPATION (TO-252-5-P2)

Power Dissipation (P_D) depends on conditions of mounting on board. This specification is based on the measurement at the condition below:

Measurement Conditions

	Ultra High Wattage Land Pattern	Standard Land Pattern
Environment	Mounting on board (Wind velocity 0 m/s)	
Board Material	Glass cloth epoxy plastic (Four-layers)	Glass cloth epoxy plastic (Double layers)
Board Dimensions	76.2 mm x 114.3 mm x 0.8 mm	50 mm x 50 mm x 1.6 mm
Copper Ratio	Top, Back side: Approx. 96%, 2nd, 3rd: 100%	Top side: Approx. 50%, Back side: Approx. 50%
Through - hole	ϕ 0.4 mm x 30 pcs	ϕ 0.5 mm x 24 pcs

Measurement Result (Ta = 25°C, Tjmax = 150°C)

	Ultra High Wattage Land Pattern	Standard Land Pattern
Power Dissipation	4800 mW	2350 mW
Thermal Resistance	θja= (150-25°C)/4.8 W = 26°C/W	θja=(150-25°C)/2.35 W= 53°C/W
	θjc= 7°C/W	θjc= 17°C/W

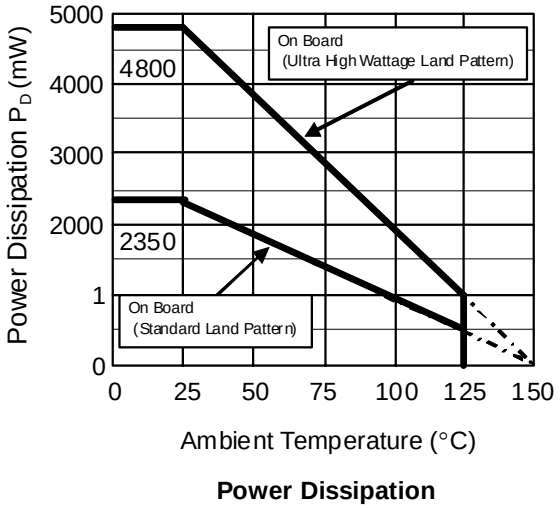

Power Dissipation

Power Dissipation vs. Ambience Temperature

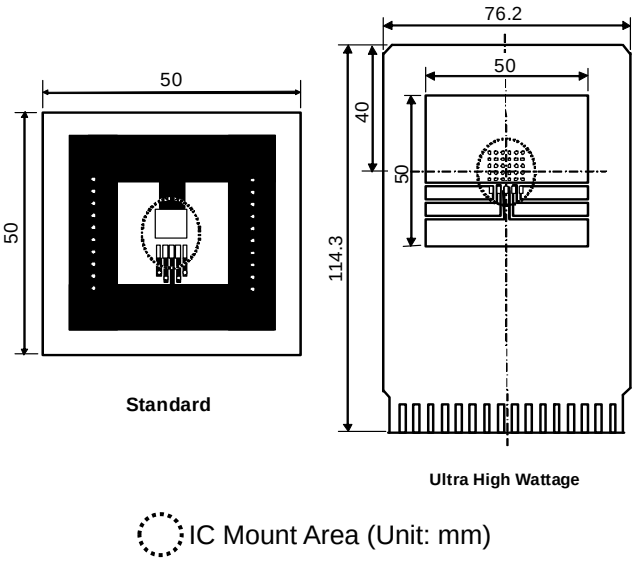

Measurement Board Pattern

PACKAGE DIMENSIONS (TO-252-5-P2)

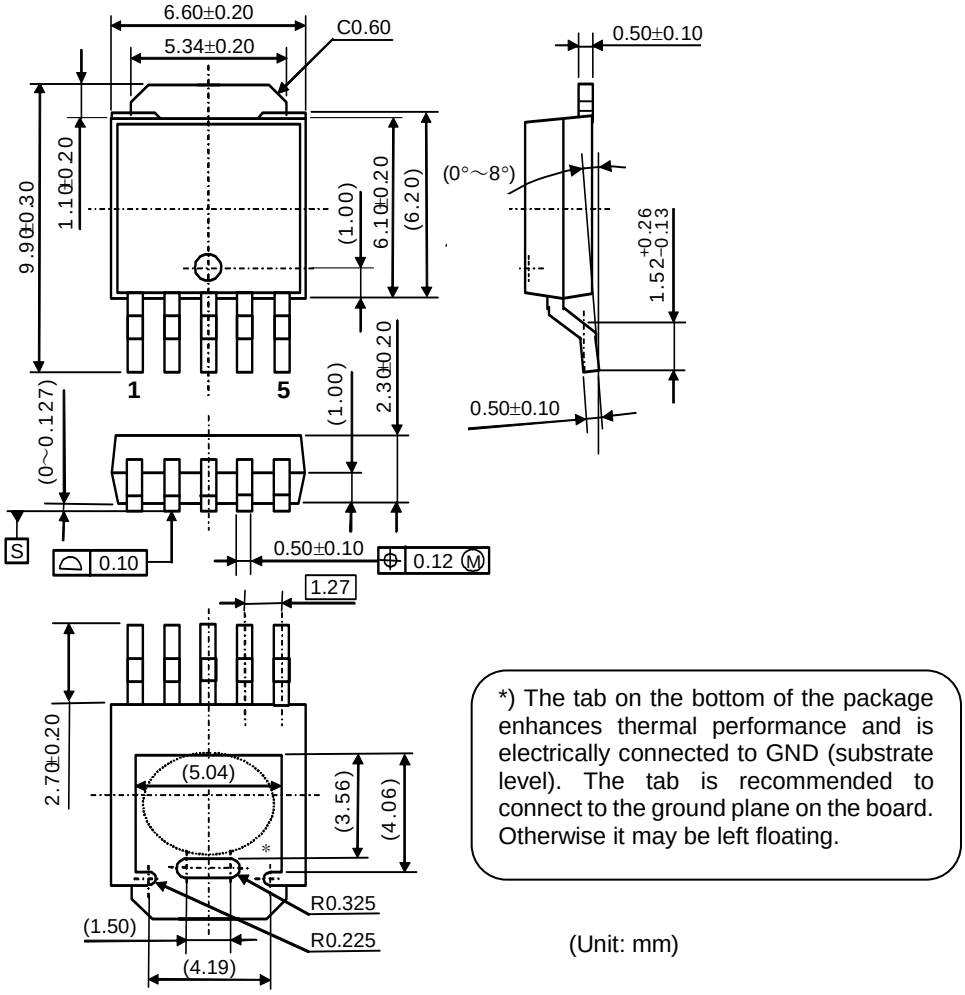

*) The tab on the bottom of the package enhances thermal performance and is electrically connected to GND (substrate level). The tab is recommended to connect to the ground plane on the board. Otherwise it may be left floating.

(Unit: mm)

TO-252-5-P2 Package Dimensions

MARK SPECIFICATION (TO-252-5-P2)

①②③④⑤⑥⑦⑧: Product Code … **Refer to *R1517J MARK SPECIFICATION TABLE***

⑨⑩: Lot Number … Alphanumeric Serial Number

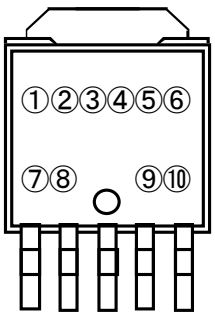

TO-252-5-P2 Mark Specification

R1517J MARK SPECIFICATION TABLE (TO-252-5-P2)

R1517Jxx1B

Product Name	①②③④⑤⑥⑦⑧	V_{SET}
R1517J251B	**K 1 J 2 5 1 B**	2.5 V
R1517J281B	**K 1 J 2 8 1 B**	2.8 V
R1517J301B	**K 1 J 3 0 1 B**	3.0 V
R1517J331B	**K 1 J 3 3 1 B**	3.3 V
R1517J341B	**K 1 J 3 4 1 B**	3.4 V
R1517J501B	**K 1 J 5 0 1 B**	5.0 V
R1517J601B	**K 1 J 6 0 1 B**	6.0 V
R1517J801B	**K 1 J 8 0 1 B**	8.0 V
R1517J851B	**K 1 J 8 5 1 B**	8.5 V
R1517J901B	**K 1 J 9 0 1 B**	9.0 V

R1517J001C (Adjustable Output Voltage Setting Type)

Product Name	①②③④⑤⑥⑦⑧	V_{SET}
R1517J001C	**K 2 J 0 0 1 C**	—

R1517Jxx1D

Product Name	①②③④⑤⑥⑦⑧	V_{SET}
R1517J251D	**K 3 J 2 5 1 D**	2.5 V
R1517J281D	**K 3 J 2 8 1 D**	2.8 V
R1517J301D	**K 3 J 3 0 1 D**	3.0 V
R1517J331D	**K 3 J 3 3 1 D**	3.3 V
R1517J341D	**K 3 J 3 4 1 D**	3.4 V
R1517J501D	**K 3 J 5 0 1 D**	5.0 V
R1517J601D	**K 3 J 6 0 1 D**	6.0 V
R1517J801D	**K 3 J 8 0 1 D**	8.0 V
R1517J851D	**K 3 J 8 5 1 D**	8.5 V
R1517J901D	**K 3 J 9 0 1 D**	9.0 V

R1517Jxx1E

Product Name	①②③④⑤⑥⑦⑧	V_{SET}
R1517J251E	**K 4 J 2 5 1 E**	2.5 V
R1517J281E	**K 4 J 2 8 1 E**	2.8 V
R1517J301E	**K 4 J 3 0 1 E**	3.0 V
R1517J331E	**K 4 J 3 3 1 E**	3.3 V
R1517J341E	**K 4 J 3 4 1 E**	3.4 V
R1517J501E	**K 4 J 5 0 1 E**	5.0 V
R1517J601E	**K 4 J 6 0 1 E**	6.0 V
R1517J801E	**K 4 J 8 0 1 E**	8.0 V
R1517J851E	**K 4 J 8 5 1 E**	8.5 V
R1517J901E	**K 4 J 9 0 1 E**	9.0 V

R1517Jxx1F

Product Name	①②③④⑤⑥⑦⑧	V_{SET}
R1517J251F	**K 5 J 2 5 1 F**	2.5 V
R1517J281F	**K 5 J 2 8 1 F**	2.8 V
R1517J301F	**K 5 J 3 0 1 F**	3.0 V
R1517J331F	**K 5 J 3 3 1 F**	3.3 V
R1517J341F	**K 5 J 3 4 1 F**	3.4 V
R1517J501F	**K 5 J 5 0 1 F**	5.0 V
R1517J601F	**K 5 J 6 0 1 F**	6.0 V
R1517J801F	**K 5 J 8 0 1 F**	8.0 V
R1517J851F	**K 5 J 8 5 1 F**	8.5 V
R1517J901F	**K 5 J 9 0 1 F**	9.0 V

TYPICAL CHARACTERISTICS

Note: Typical Characteristics are intended to be used as reference data; they are not guaranteed.

1) Output Voltage vs. Output Current (Ta = 25°C)

R1517x25xx, R1517x001C

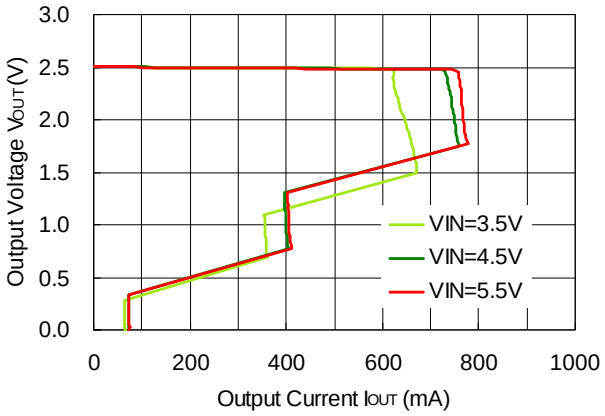

R1517x33xx

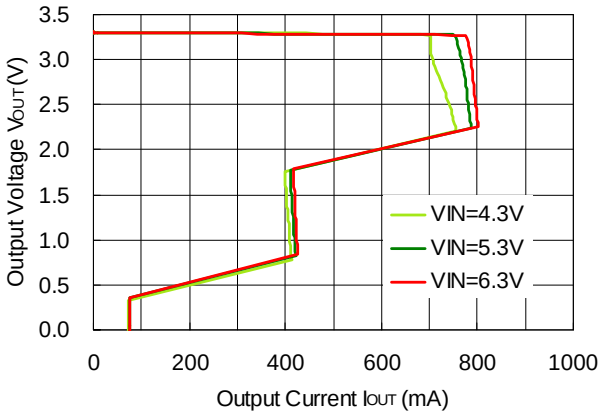

R1517x50xx

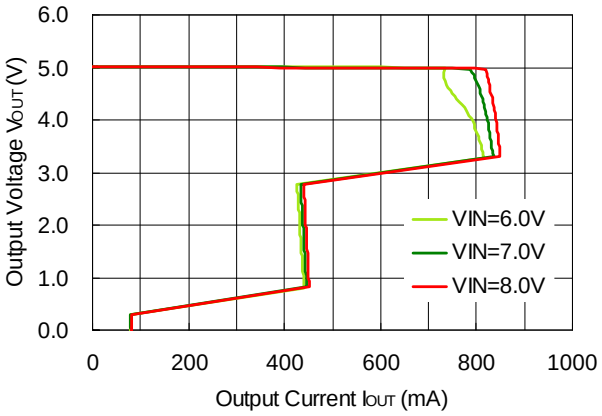

R1517x85xx

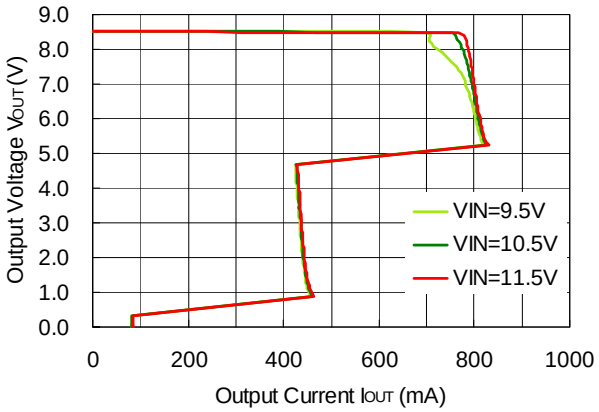

2) Output Voltage vs. Input Voltage (Ta = 25°C)

R1517x25xx

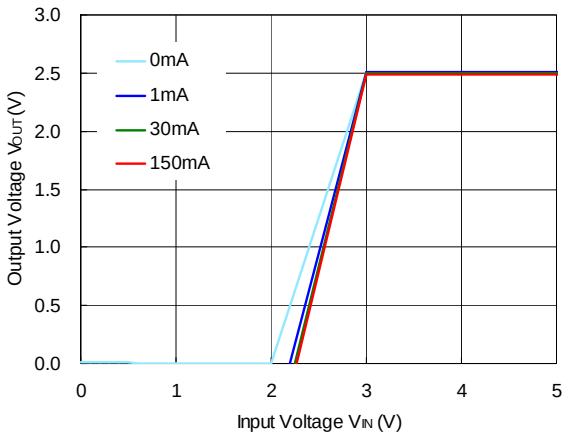

R1517x33xx

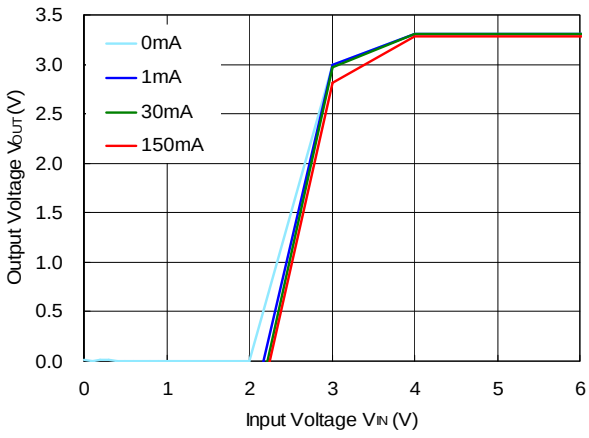

R1517x50xx

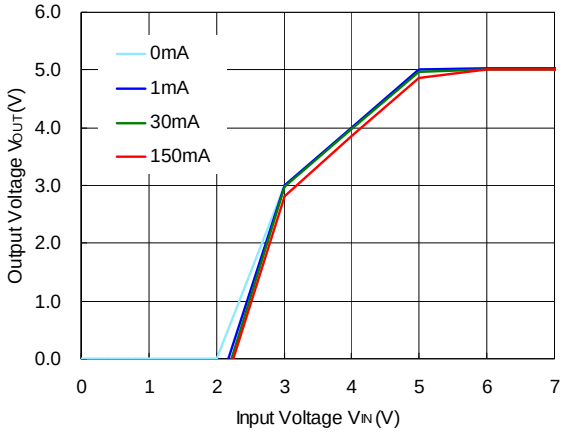

R1517x85xx

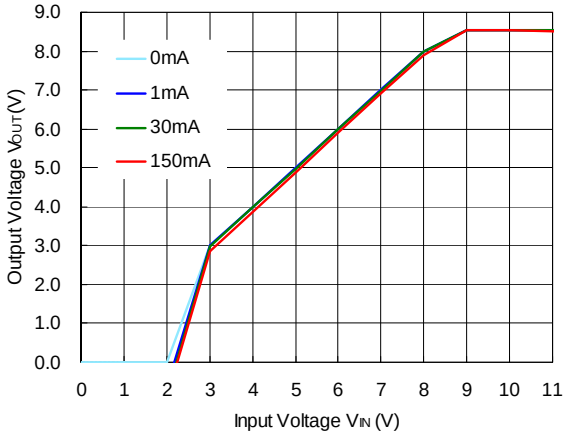

3) Supply Current vs. Input Voltage （ I_{OUT} = 0 mA ）

R1517x25xx, R1517x001C

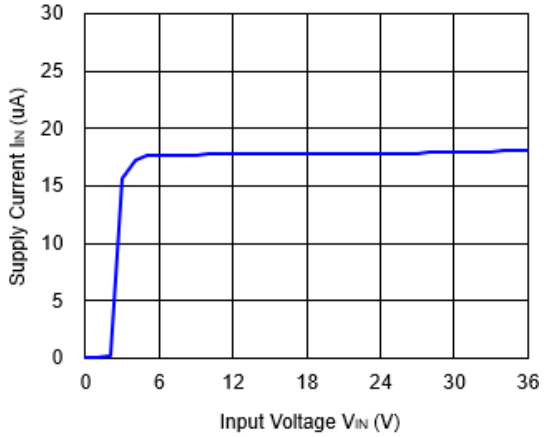

R1517x33xx

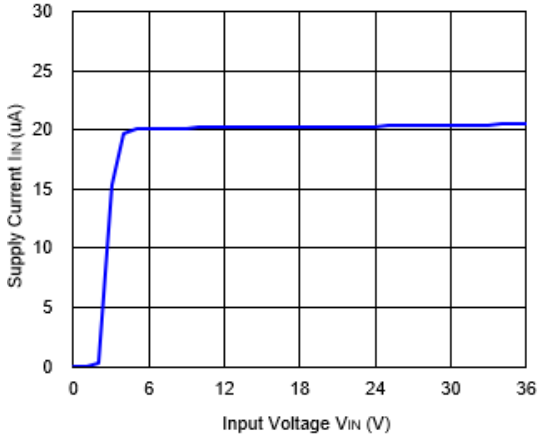

R1517x50xx

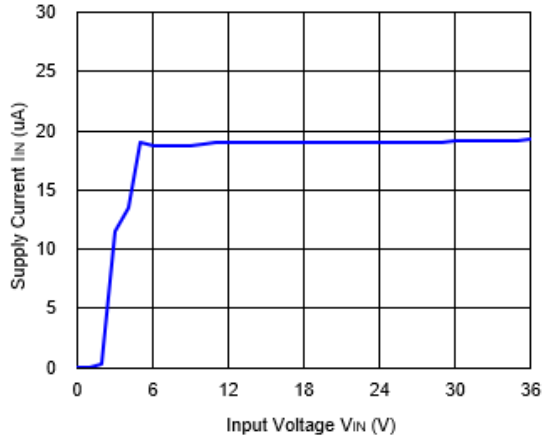

R1517x85xx

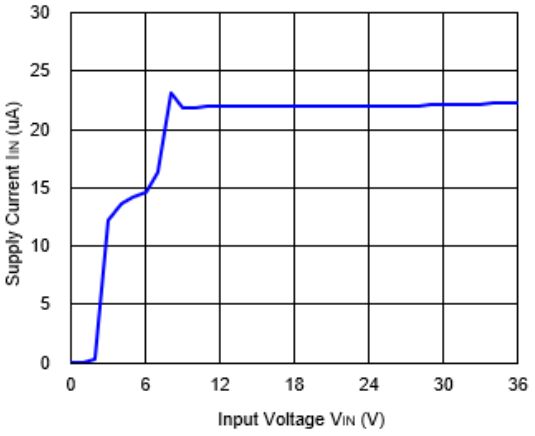

4) Output Voltage vs. Operating Temperature

R1517x25xx, R1517x001C

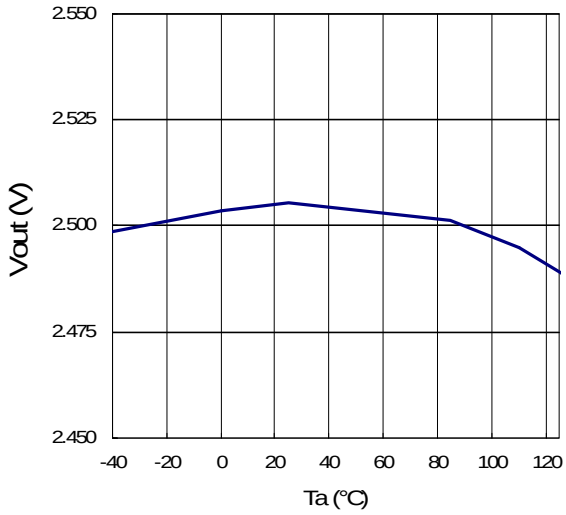

R1517x33xx

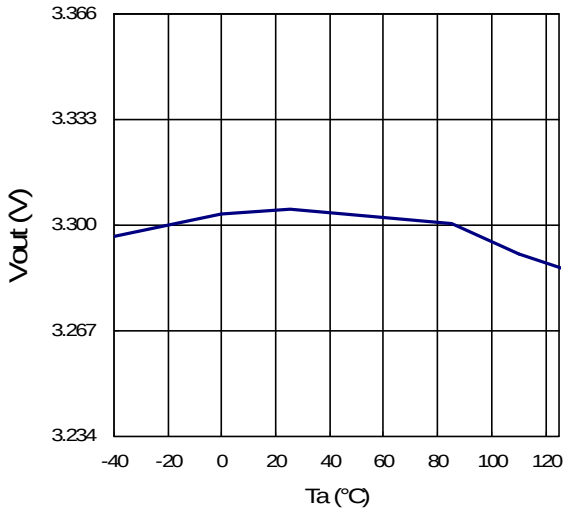

R1517x50xx

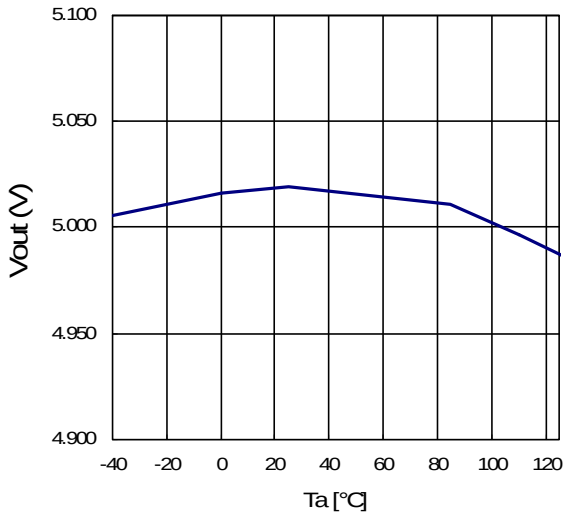

R1517x85xx

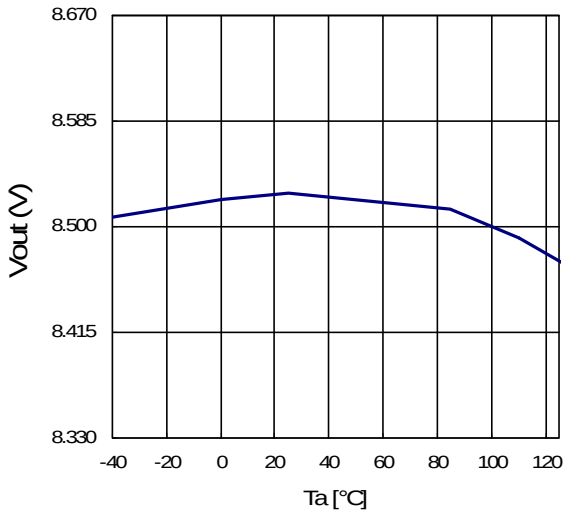

5) Dropout Voltage vs. Output Current

R1517x25xx, R1517x001C

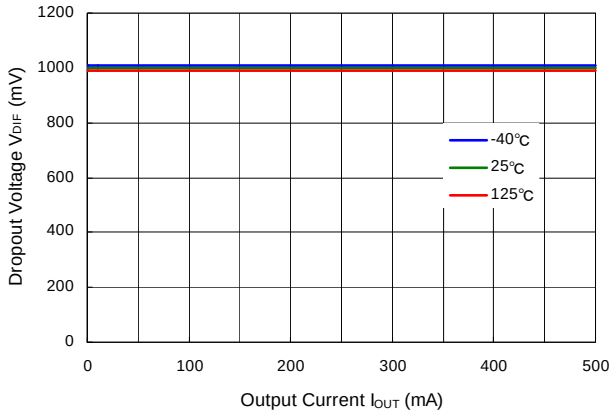

R1517x33xx

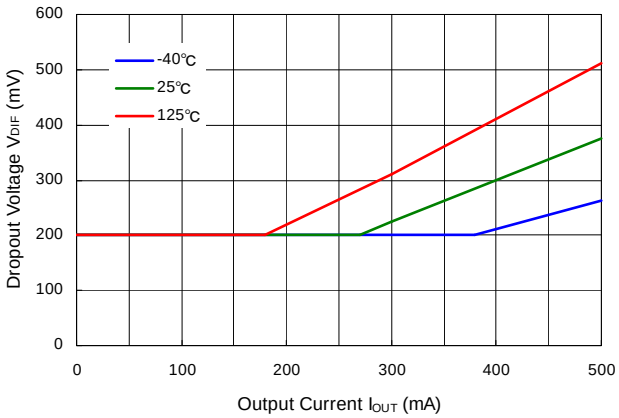

R1517x50xx

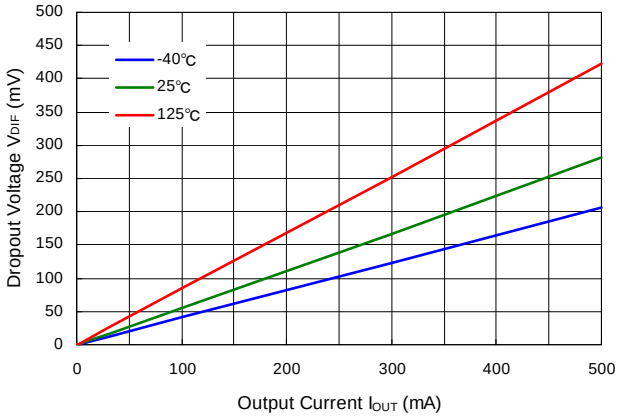

R1517x85xx

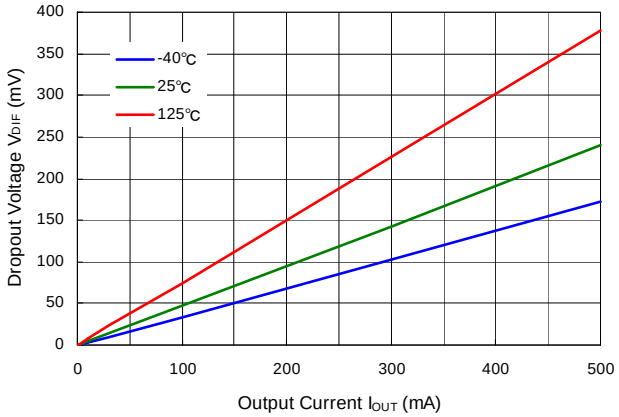

6) Ripple Rejection vs. Input Voltage (Ta = 25°C, Ripple = 0.2 Vpp)

R1517x25xx, R1517x001C (I_{OUT} = 1 mA)

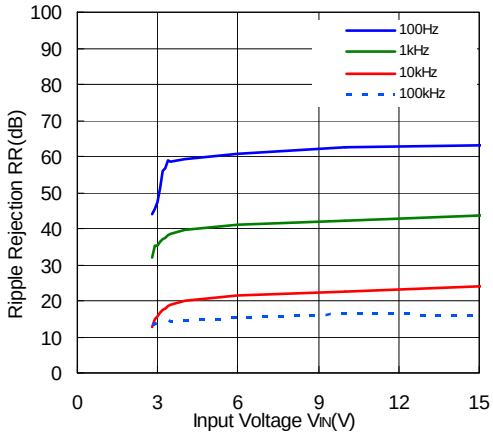

R1517x25xx, R1517x001C (I_{OUT} = 150 mA)

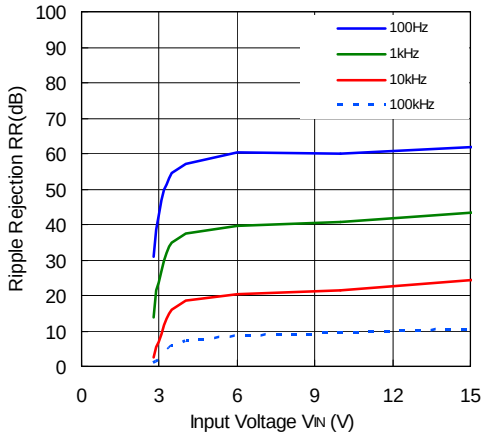

R1517x33xx (I_{OUT} = 1 mA)

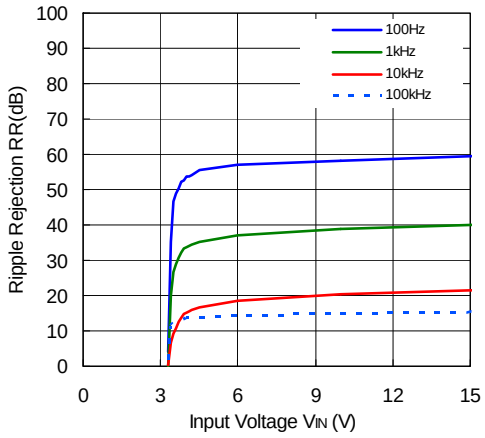

R1517x33xx (I_{OUT} = 150 mA)

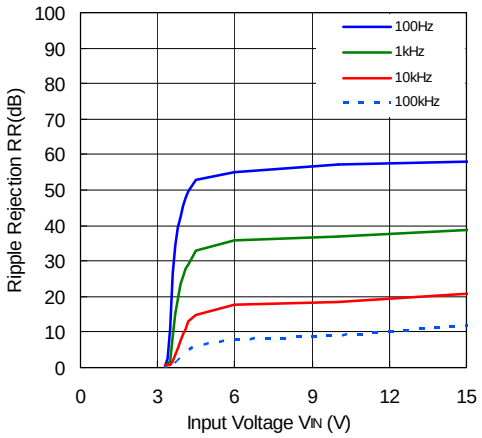

R1517x50xx (I_{OUT} = 1 mA)

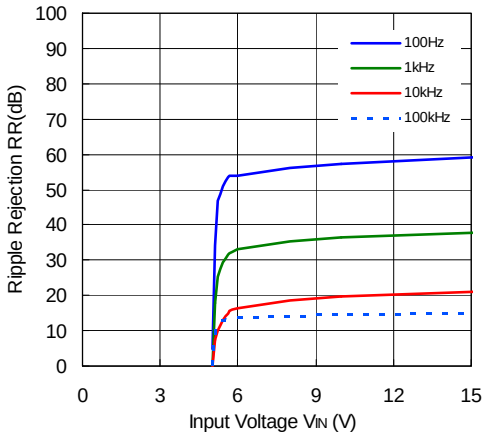

R1517x50xx (I_{OUT} = 150 mA)

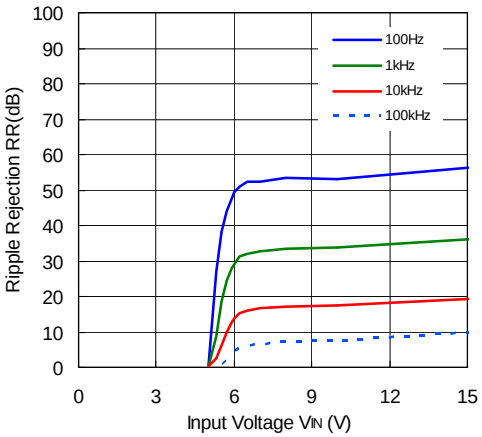

R1517x85xx (I_{OUT} = 1 mA)

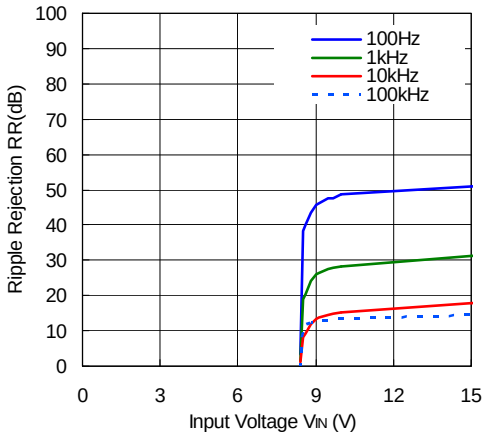

R1517x85xx (I_{OUT} = 150 mA)

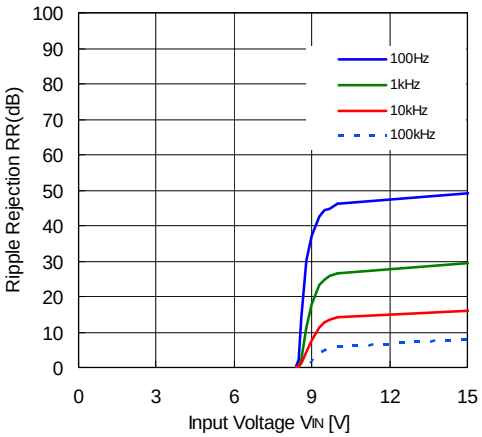

7) Ripple Rejection vs. Frequency (Ta = 25°C, Ripple = 0.2 Vpp)

R1517x25xx, R1517x001C

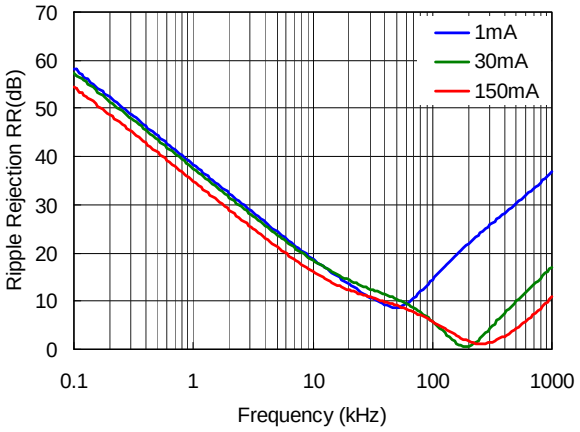

R1517x33xx

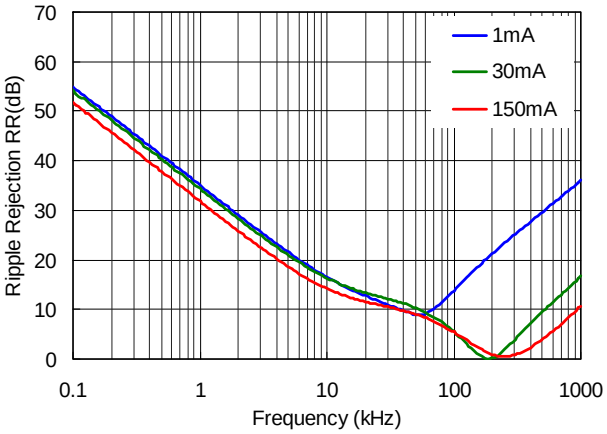

R1517x50xx

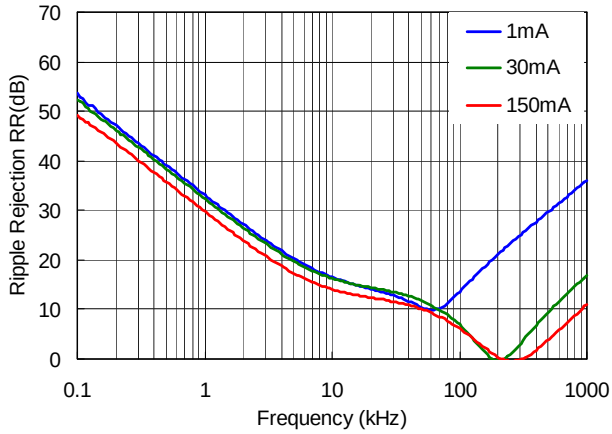

R1517x85xx

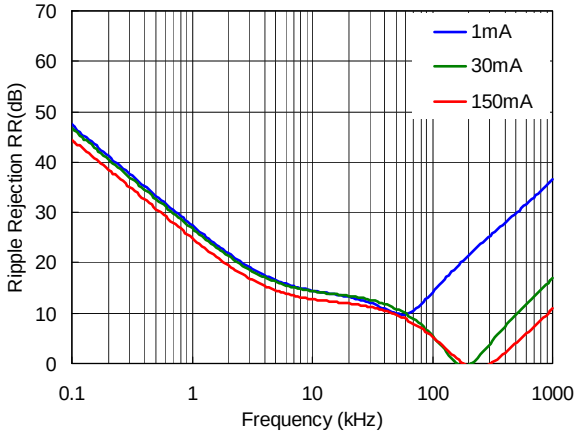

8) Input Transient Response (Ta = 25°C, I_{OUT} = 1 mA, tr = tf = 5 µs)

R1517x25xx, R1517x001C (C2 = 0.1 µF)

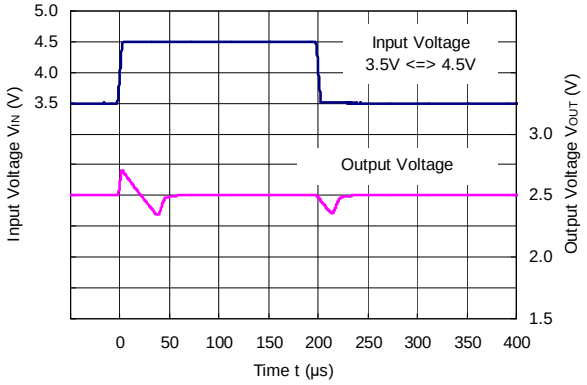

R1517x25xx, R1517x001C (C2 = 10 µF)

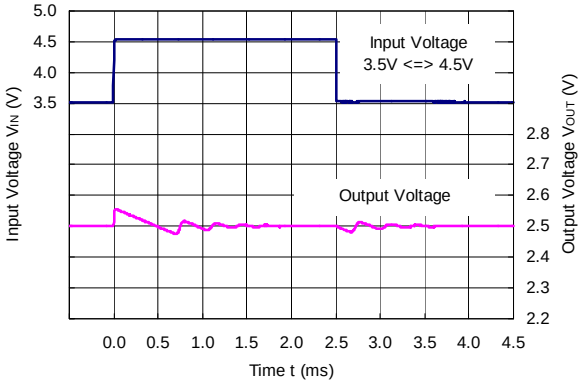

R1517x33xx (C2 = 0.1 µF)

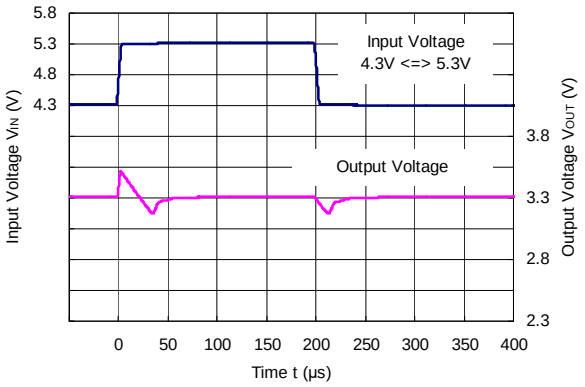

R1517x33xx (C2 = 10 µF)

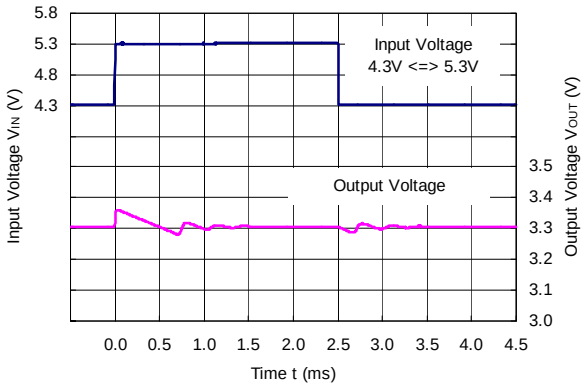

R1517x50xx (C2 = 0.1 µF)

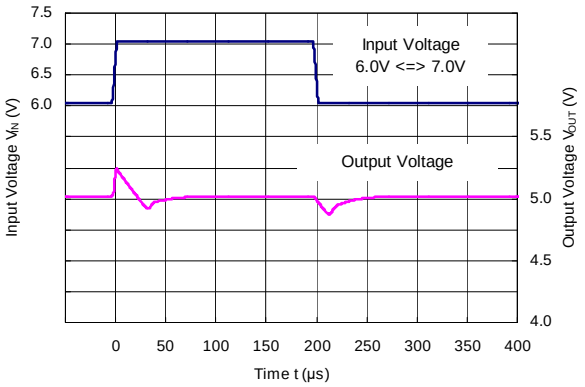

R1517x50xx (C2 = 10 µF)

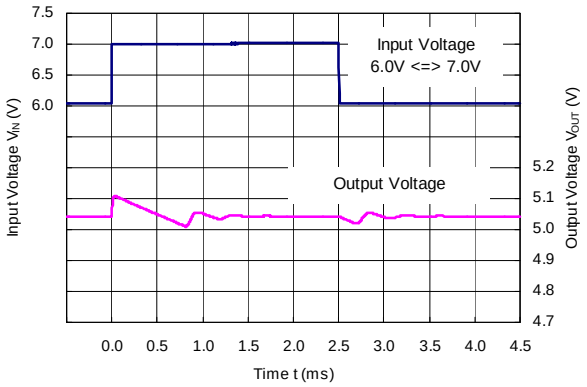

R1517x85xx (C2 = 0.1 µF)

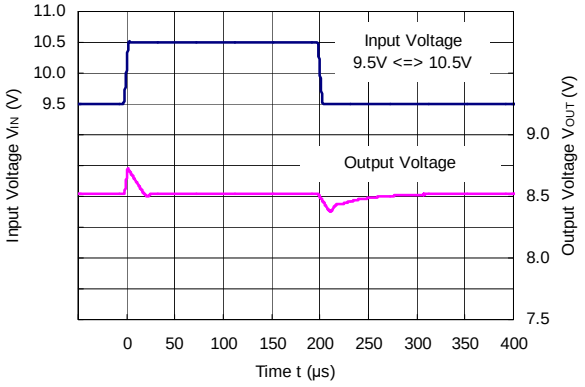

R1517x85xx (C2 = 10 µF)

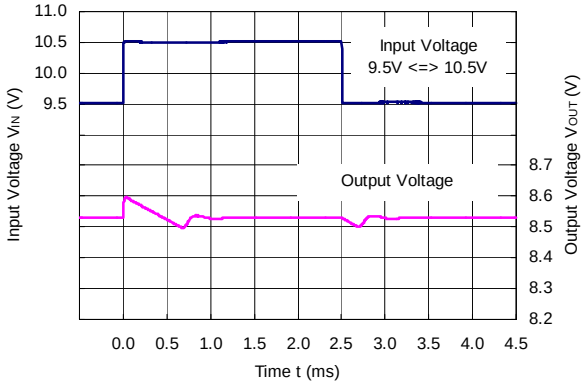

9) Load Transient Response (Ta = 25°C, V_{IN} = V_{OUT} + 1.0 V, tr = tf = 0.5 µs)

R1517x25xx, R1517x001C (C2 = 0.1 µF)

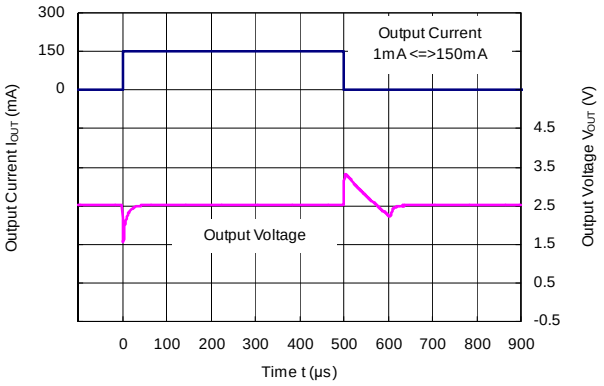

R1517x25xx, R1517x001C (C2 = 10 µF)

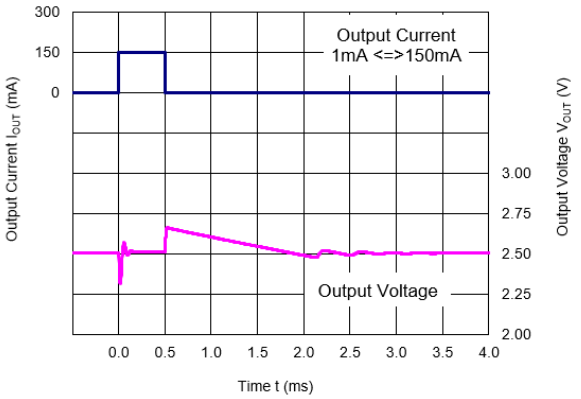

R1517x33xx (C2 = 0.1 µF)

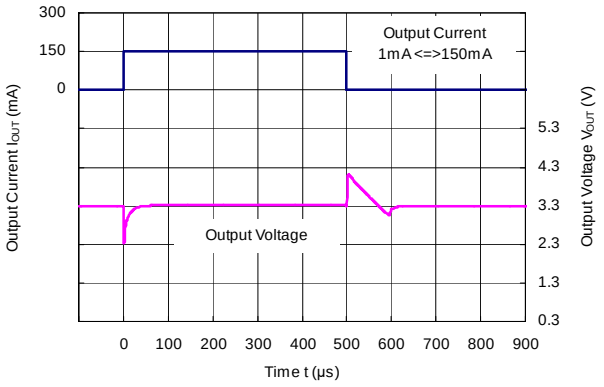

R1517x33xx (C2 = 10 µF)

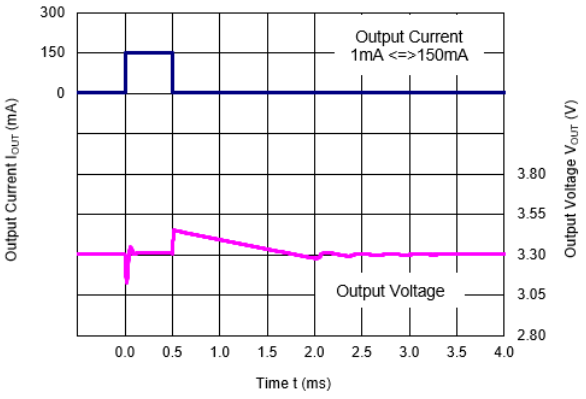

R1517x50xx (C2 = 0.1 µF)

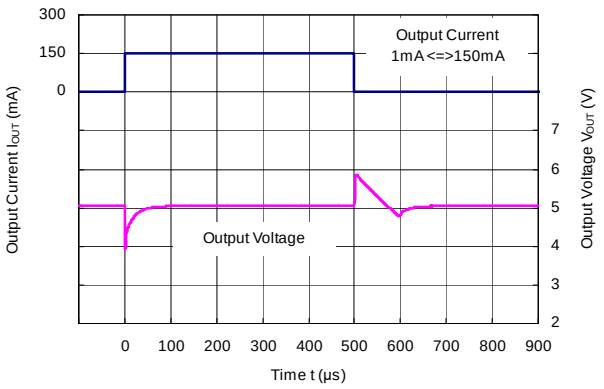

R1517x50xx (C2 = 10 µF)

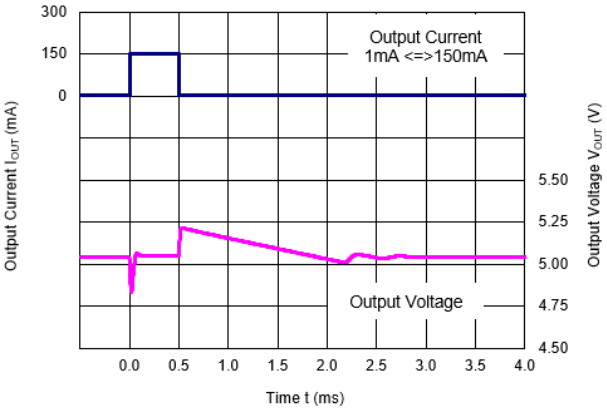

R1517x85xx (C2 = 0.1 µF)

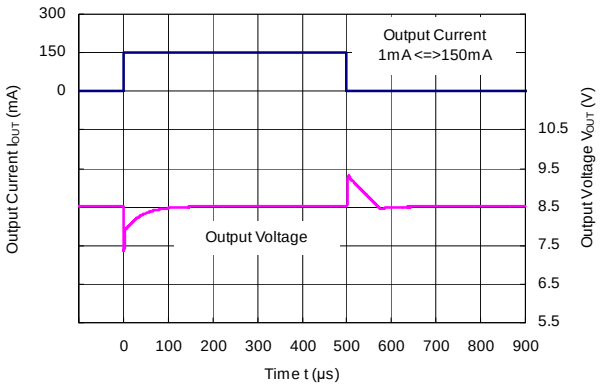

R1517x85xx (C2 = 10 µF)

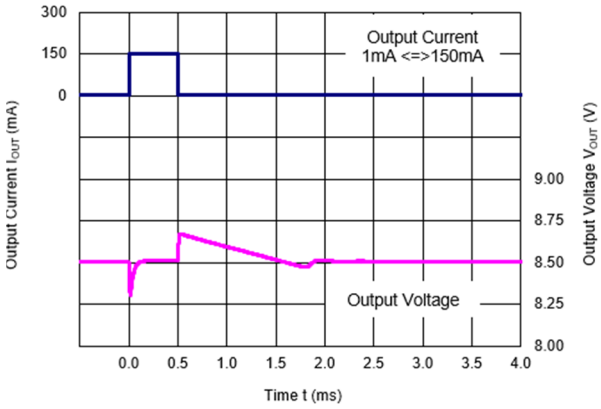

10) CE Transient Response (Ta = 25°C)

R1517x25xB/D, R1517x001C (C2 = 0.1 µF)

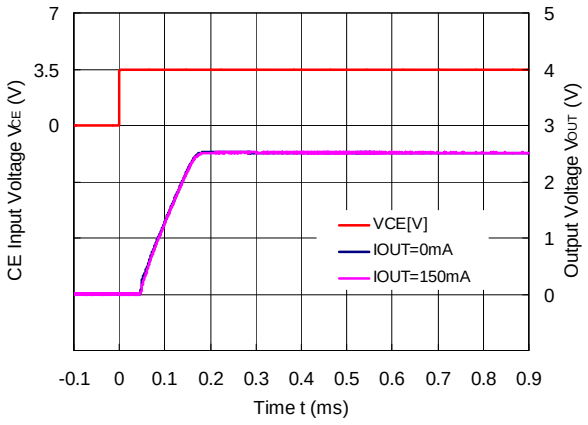

R1517x25xD (C2 = 0.1 µF)

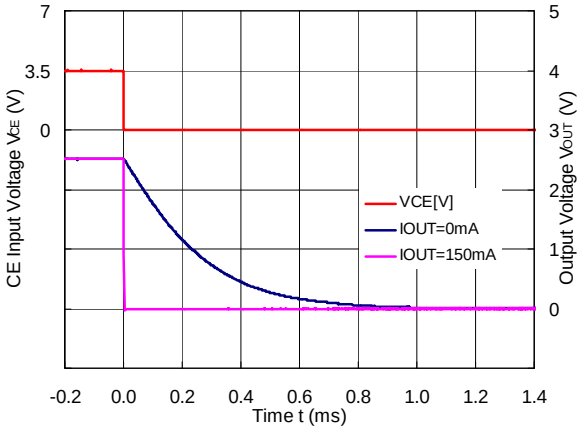

R1517x33xB/D (C2 = 0.1 µF)

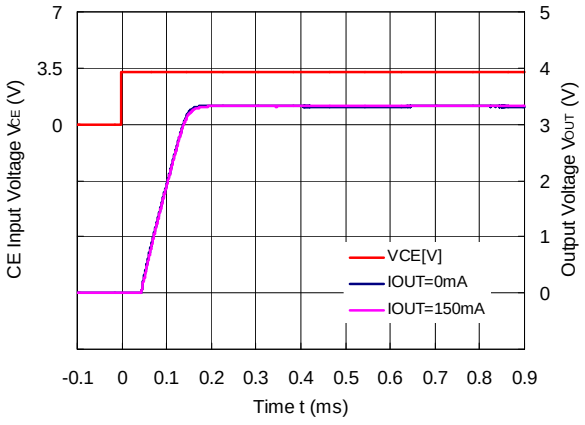

R1517x33xD (C2 = 0.1 µF)

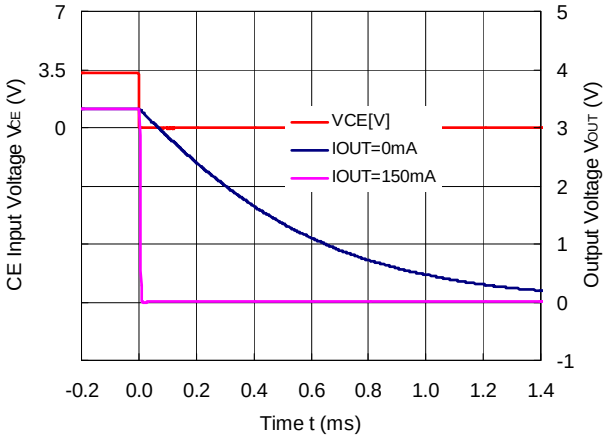

R1517x50xB/D (C2 = 0.1 µF)

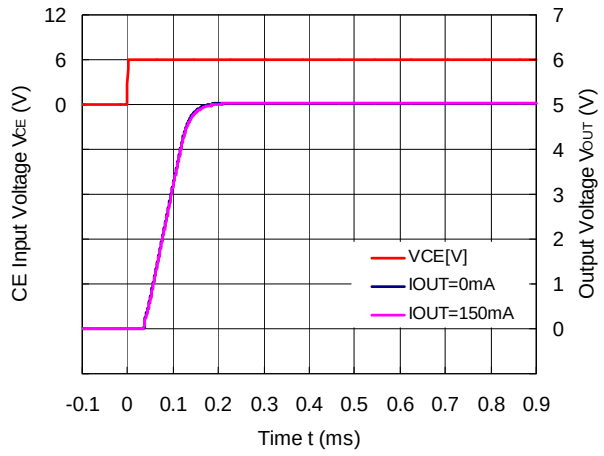

R1517x50xD (C2 = 0.1 µF)

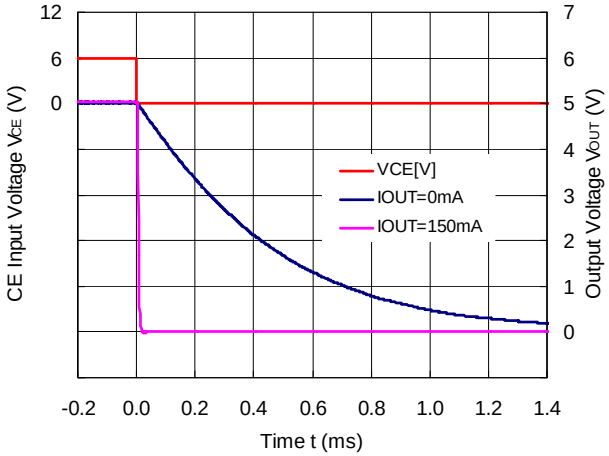

R1517x85xB/D (C2 = 0.1 µF)

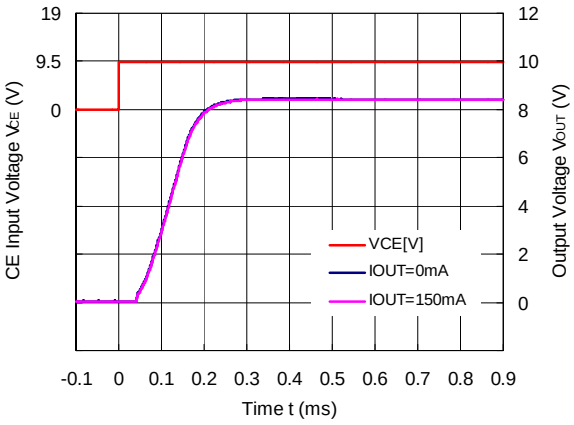

R1517x85xD (C2 = 0.1 µF)

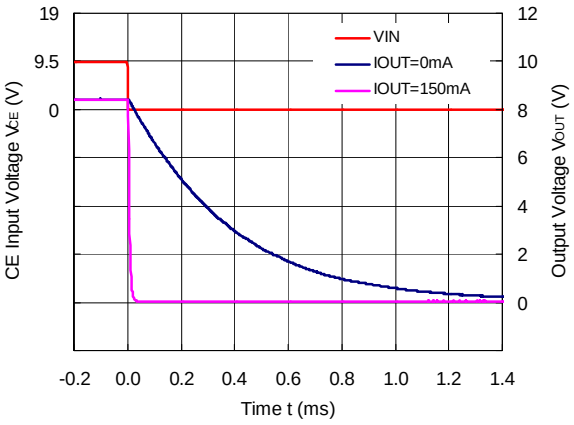

R1517J251E/F (C2 = 0.1 µF, C_D = 1 nF)

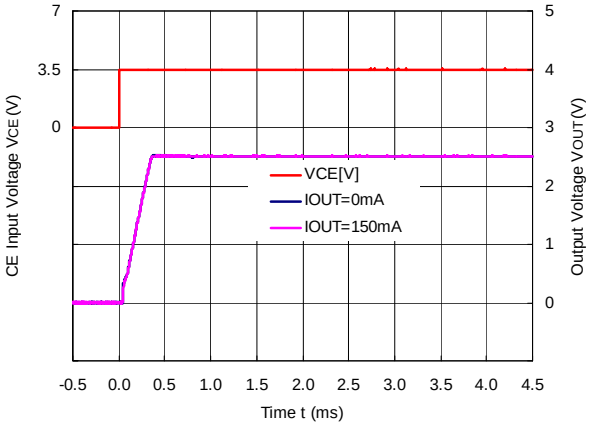

R1517J251F (C2 = 0.1 µF, C_D = 1 nF)

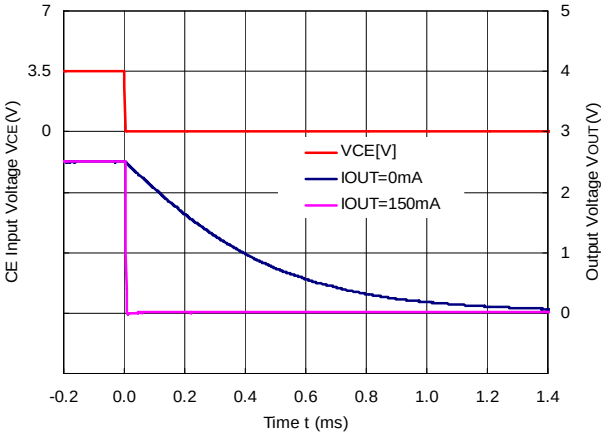

R1517J331E/F (C2 = 0.1 µF, C_D = 1 nF)

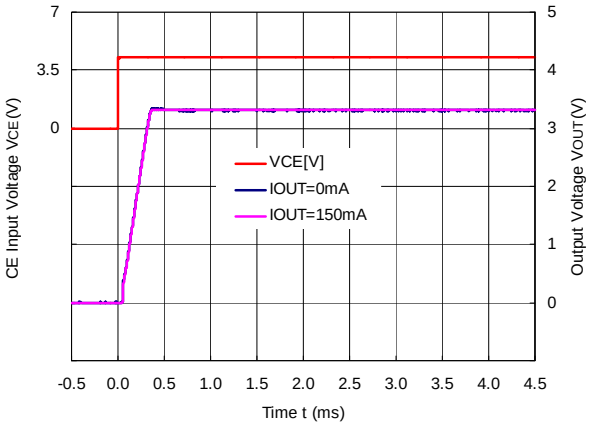

R1517J331F (C2 = 0.1 µF, C_D = 1 nF)

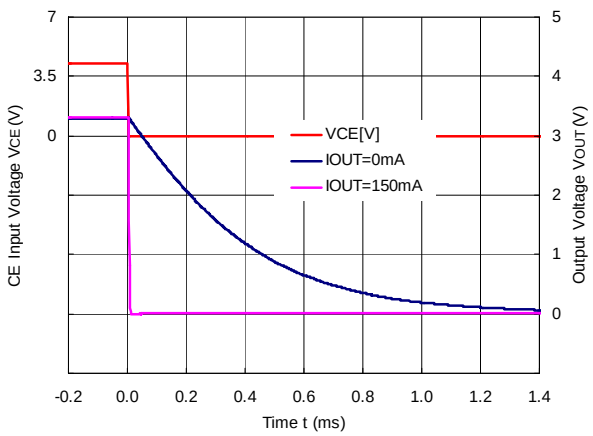

R1517J501E/F (C2 = 0.1 µF, C_D = 1 nF)

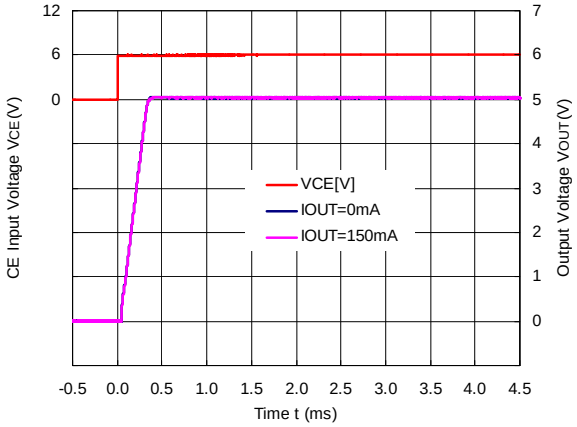

R1517J501F (C2 = 0.1 µF, C_D = 1 nF)

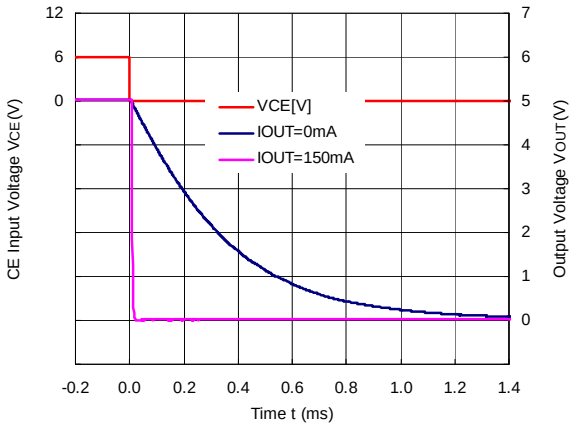

R1517J851E/F (C2 = 0.1 µF, C_D = 1 nF)

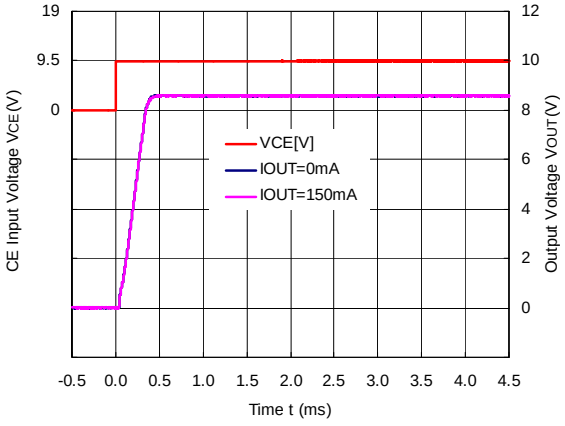

R1517J851F (C2 = 0.1 µF, C_D = 1 nF)

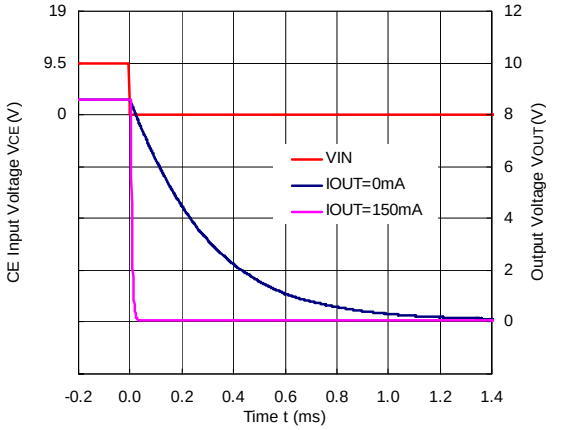

11) Inrush Current Prevention Circuit (Ta = 25°C, I_{OUT} = 1 mA)

R1517x25xB/D, R1517x001C

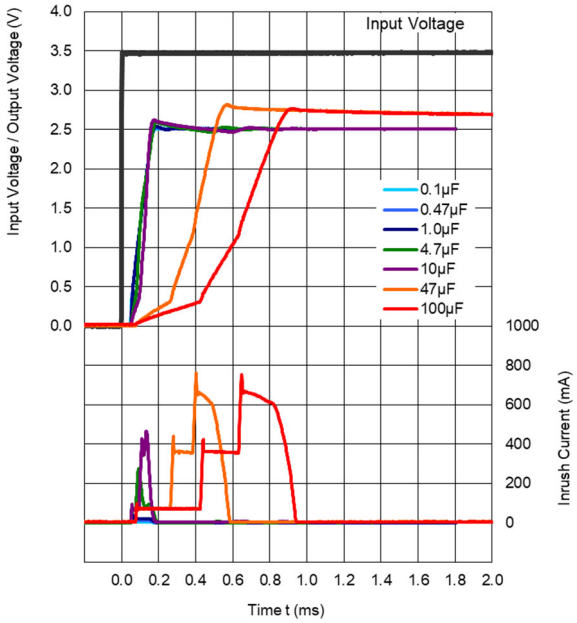

R1517x33xB/D

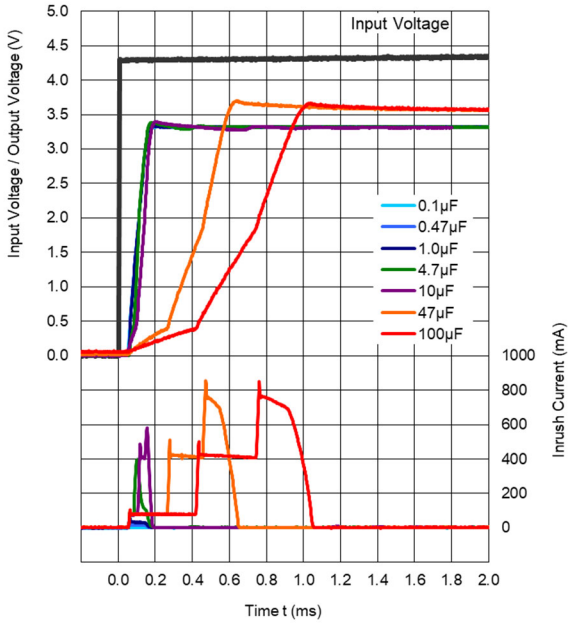

R1517x50xB/D

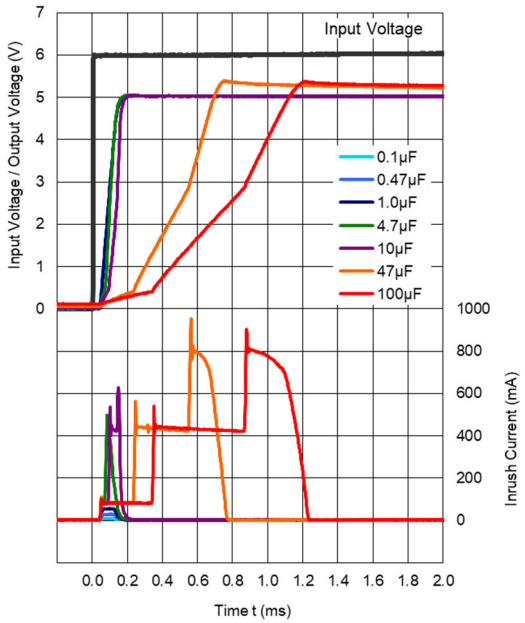

R1517x85xB/D

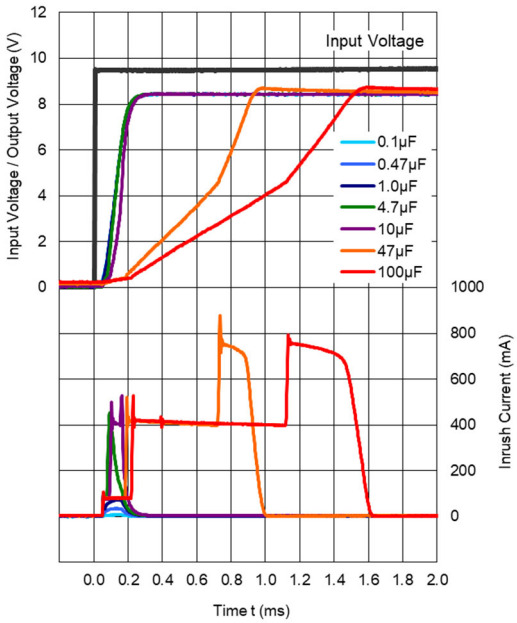

R1517J251E/F (C_D = 10 nF)

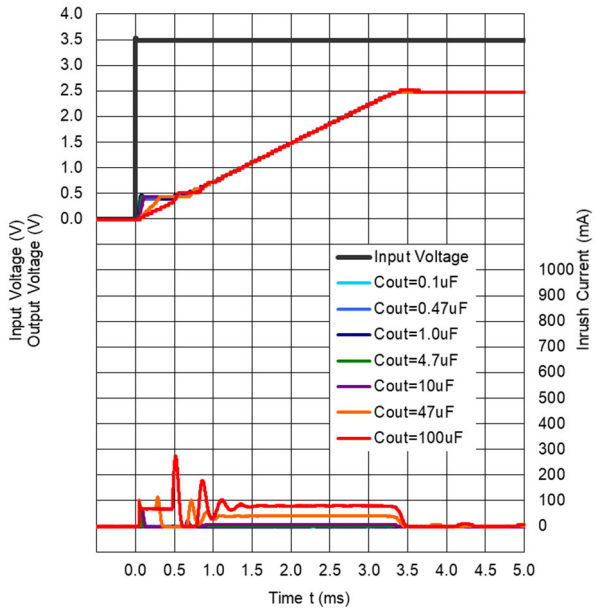

R1517J331E/F (C_D = 10 nF)

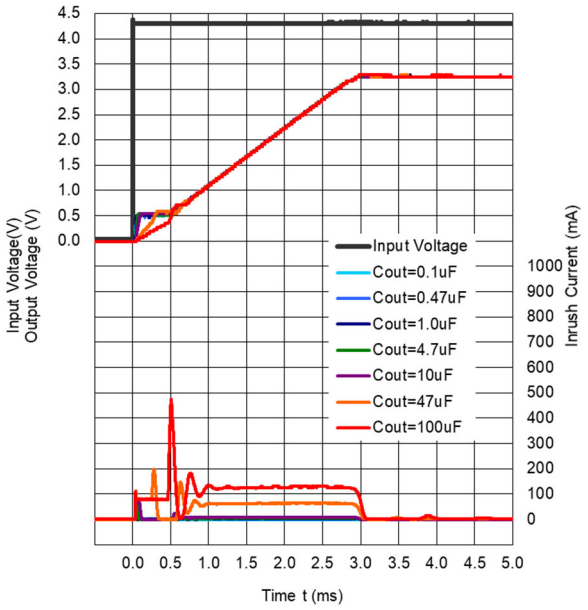

R1517J501E/F (C_D = 10 nF)

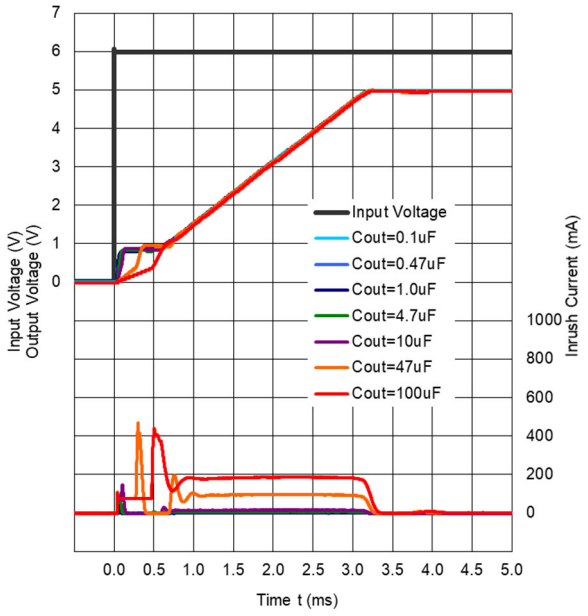

R1517J851E/F (C_D = 10 nF)

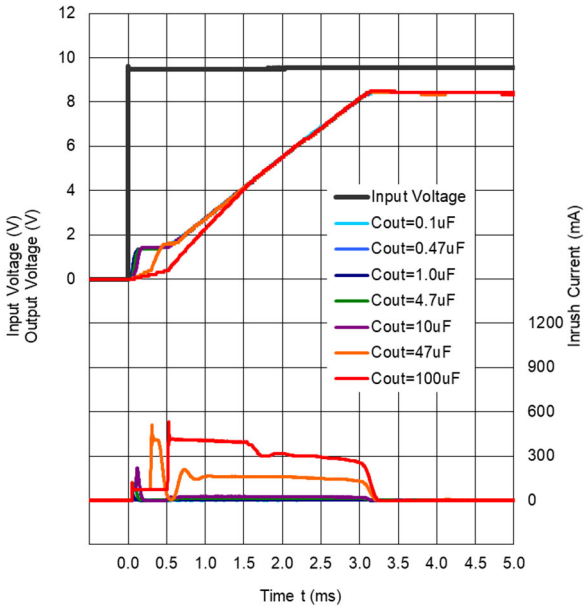

Load Transient vs. Output Capacity (C2)

R1517 performs a stable operation by using 0.1 µF of ceramic capacitor as the output capacitor. However, the variation of output voltage may not meet the demand of the system when input voltage and load current vary. In such cases, the variation of output voltage can be minimized significantly by using 10 µF or higher ceramic capacitor. When using a high-capacity electrolytic capacitor for the output line, place the electrolytic capacitor a few centimeters apart from the IC after arranging the ceramic capacitor close to the IC.

Load Transient Response

R1517x25xx

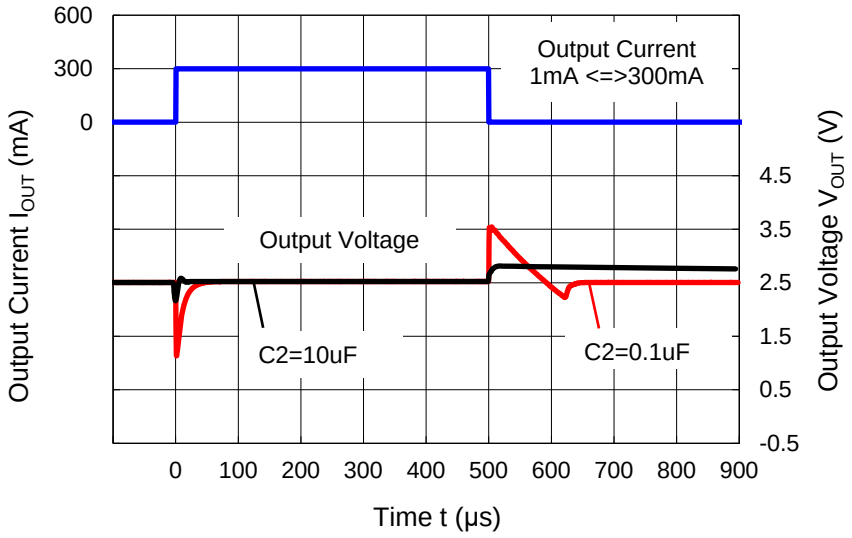

ESR vs. Output Current

It is recommended that a ceramic type capacitor be used for this device. However, other types of capacitors having lower ESR can also be used. The relation between the output current (I_{OUT}) and the ESR of output capacitor is shown below.

R1517xxxxB/D Test Circuit

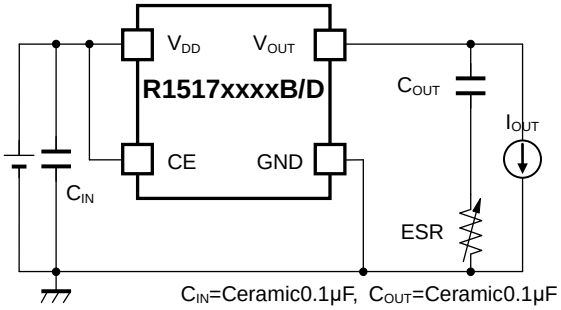

R1517x001C Test Circuit

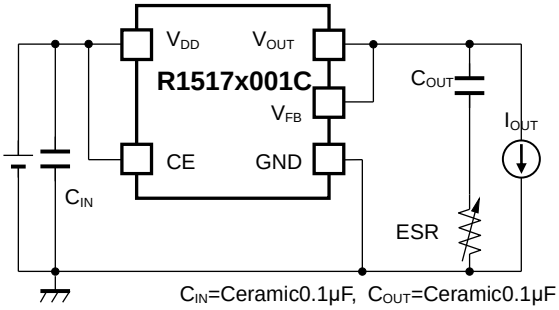

R1517Jxx1E/F Test Circuit

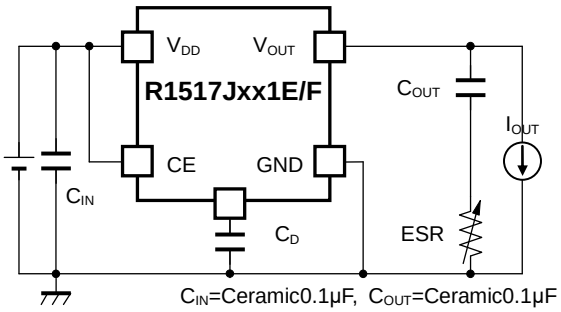

Measurement conditions

Frequency Band: 10 Hz to 2 MHz
Measurement Temperature: −40°C to 125°C
Hatched area: Noise level is 40 μV (average) or below
Capacitor: C1 = Ceramic 0.1 μF, C2 = 0.1 μF

R1517x25xx Output Current I_{OUT} vs. ESR

Vin=2.5V to 36V

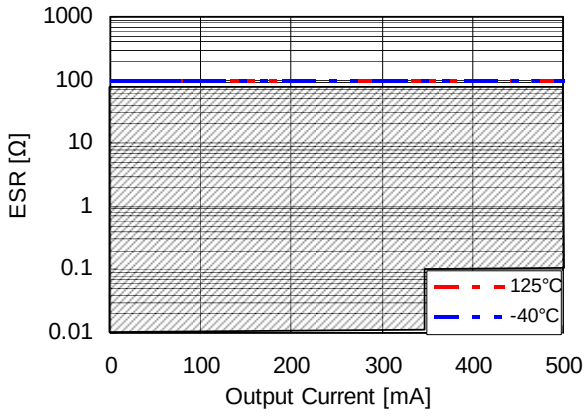

R1517x85xx Output Current I_{OUT} vs. ESR

Vin=8.5V to 36V

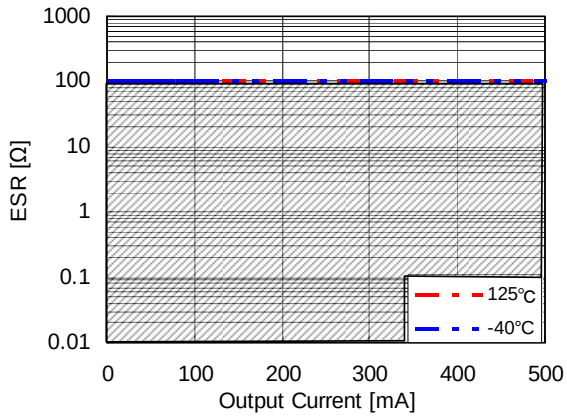

1. The products and the product specifications described in this document are subject to change or discontinuation of production without notice for reasons such as improvement. Therefore, before deciding to use the products, please refer to our sales representatives for the latest information thereon.
2. The materials in this document may not be copied or otherwise reproduced in whole or in part without the prior written consent of us.
3. This product and any technical information relating thereto are subject to complementary export controls (so-called KNOW controls) under the Foreign Exchange and Foreign Trade Law, and related politics ministerial ordinance of the law. (Note that the complementary export controls are inapplicable to any application-specific products, except rockets and pilotless aircraft, that are insusceptible to design or program changes.) Accordingly, when exporting or carrying abroad this product, follow the Foreign Exchange and Foreign Trade Control Law and its related regulations with respect to the complementary export controls.
4. The technical information described in this document shows typical characteristics and example application circuits for the products. The release of such information is not to be construed as a warranty of or a grant of license under our or any third party's intellectual property rights or any other rights.
5. The products listed in this document are intended and designed for automotive applications. Those customers intending to use a product in an application requiring extreme quality and reliability, for example, in a highly specific application where the failure or misoperation of the product could result in human injury or death should first contact us.
    - Aerospace Equipment
    - Equipment Used in the Deep Sea
    - Power Generator Control Equipment (nuclear, steam, hydraulic, etc.)
    - Life Maintenance Medical Equipment
    - Fire Alarms / Intruder Detectors
    - Vehicle Control Equipment (airplane, railroad, ship, etc.)
    - Various Safety Devices
    - Traffic control system
    - Combustion equipment

    In case your company desires to use this product for any applications other than general electronic equipment mentioned above, make sure to contact our company in advance. Note that the important requirements mentioned in this section are not applicable to cases where operation requirements such as application conditions are confirmed by our company in writing after consultation with your company.
6. We are making our continuous effort to improve the quality and reliability of our products, but semiconductor products are likely to fail with certain probability. In order to prevent any injury to persons or damages to property resulting from such failure, customers should be careful enough to incorporate safety measures in their design, such as redundancy feature, fire containment feature and fail-safe feature. We do not assume any liability or responsibility for any loss or damage arising from misuse or inappropriate use of the products.
7. The products have been designed and tested to function within controlled environmental conditions. Do not use products under conditions that deviate from methods or applications specified in this datasheet. Failure to employ the products in the proper applications can lead to deterioration, destruction or failure of the products. We shall not be responsible for any bodily injury, fires or accident, property damage or any consequential damages resulting from misuse or misapplication of the products.
8. Quality Warranty

    8-1. Quality Warranty Period

    In the case of a product purchased through an authorized distributor or directly from us, the warranty period for this product shall be one (1) year after delivery to your company. For defective products that occurred during this period, we will take the quality warranty measures described in section 8-2. However, if there is an agreement on the warranty period in the basic transaction agreement, quality assurance agreement, delivery specifications, etc., it shall be followed.

    8-2. Quality Warranty Remedies

    When it has been proved defective due to manufacturing factors as a result of defect analysis by us, we will either deliver a substitute for the defective product or refund the purchase price of the defective product.
    Note that such delivery or refund is sole and exclusive remedies to your company for the defective product.

    8-3. Remedies after Quality Warranty Period

    With respect to any defect of this product found after the quality warranty period, the defect will be analyzed by us. On the basis of the defect analysis results, the scope and amounts of damage shall be determined by mutual agreement of both parties. Then we will deal with upper limit in Section 8-2. This provision is not intended to limit any legal rights of your company.
9. Anti-radiation design is not implemented in the products described in this document.
10. The X-ray exposure can influence functions and characteristics of the products. Confirm the product functions and characteristics in the evaluation stage.
11. WLCSP products should be used in light shielded environments. The light exposure can influence functions and characteristics of the products under operation or storage.
12. Warning for handling Gallium and Arsenic (GaAs) products (Applying to GaAs MMIC, Photo Reflector). These products use Gallium (Ga) and Arsenic (As) which are specified as poisonous chemicals by law. For the prevention of a hazard, do not burn, destroy, or process chemically to make them as gas or power. When the product is disposed of, please follow the related regulation and do not mix this with general industrial waste or household waste.
13. Please contact our sales representatives should you have any questions or comments concerning the products or the technical information.

NISSHINBO

Nisshinbo Micro Devices Inc.

Official website
https://www.nisshinbo-microdevices.co.jp/en/

Purchase information
https://www.nisshinbo-microdevices.co.jp/en/buy/

ENTEGRECİ

Bu belge www.entegreci.com üzerinden sunulmaktadır.

Elektronik komponent tedarikinde Entegreci

Entegreci, Eskişehir merkezli, Türkiye geneline satış yapan bir elektronik komponent mağazasıdır. Entegreler (IC), mikrodenetleyiciler, transistörler, diyotlar, pasif elemanlar, konnektörler, modüller ve geliştirme kartları tek adetten seri üretim adetlerine kadar satılır. Ürün sayfalarında güncel stok durumunu, fiyatı ve datasheet bağlantısını bulabilirsiniz.

Parça koduyla arama

Üretici parça numarasını yazın; stok ve fiyatı hemen görün.

www.entegreci.com

Ürün kategorileri

Entegreden kapasitöre tüm elektronik komponent kategorileri.

Kategorilere göz atın

Üreticiler

Aradığınız üreticinin ürünlerini tek sayfada inceleyin.

Üreticileri görün

Toplu alım ve teklif

Listede olmayan ya da yüksek adetli parçalar için teklif isteyin.

Teklif isteyin

www.entegreci.com | **destek@entegreci.com** | **0850 305 90 34**

Entegreci is an online electronic components store based in Türkiye. Search by manufacturer part number to see stock, prices and datasheets for integrated circuits, microcontrollers, transistors, passive components and connectors, or request a quote for parts that are not listed.

Bu sayfa Entegreci tarafından eklenmiştir. Belgenin önceki sayfaları asıl yayıncısına aittir ve içeriği değiştirilmemiştir; en güncel sürüm için belgenin yayıncısına başvurun.