# 1 A 36V Input Low Supply Current LDO for Automotive Applications

NO.EC-329-240326

## OUTLINE

R1518x is a CMOS-based LDO that specifically designed for automotive applications featuring 1 A output current and 36 V input voltage. In addition to a conventional regulator circuit, R1518x consists of a constant slope circuit as a soft-start function, a fold-back protection circuit, a short current limit circuit, and a thermal shutdown circuit. Besides the low supply current by CMOS, the operating temperature is −40°C to 125°C and the maximum input voltage is 36 V, the R1518x is very suitable for power source of car accessories.

R1518x is available in R1518xxxxB/D/E/F with the internally fixed output voltage, and R1518xxxxD/F with the auto-discharge function at standby.

The output voltage of R1518x001C can be set with an external resistor, and the setting range is from 2.5V to Max 20V. R1518xxxxB/C/D internally fixes the soft-start time at 120 µs (Typ). R1518Jxx1E/F can adjust the soft-start time with an external capacitor.

R1518x is available in two packages for ultra high wattage: HSOP-6J and TO-252-5-P2.

## FEATURES

- Input Voltage Range (Maximum Rating) ····· 3.5 V to 36.0 V (50.0V)
- Operating Temperature range ····· –40°C to 125°C
- Supply Current ····· Typ. 18 µA
- Standby Current ····· Typ. 0.1 µA
- Dropout Voltage ····· Typ. 0.7 V ($I_{OUT}$ = 1 A, $V_{OUT}$ = 5.0 V)
- Output Voltage Accuracy ····· ±0.8% ($V_{OUT}$ ≤ 5.0 V)
- Temperature-Drift Coefficient of Output Voltage ····· Typ. ±60 ppm/°C (−40°C ≤ Ta ≤ 125°C)
- Line Regulation ····· Typ. 0.01%/V
- Packages ····· HSOP-6J, TO-252-5-P2
- Output Voltage Range ····· R1518xxxxB/D/E/F: 2.5 V/2.8 V/3.0 V/3.3 V/3.4 V/5.0 V/ 6.0 V/8.0 V/8.5 V/9.0 V
  R1518x001C: Adjustable from 2.5 V to 20.0 V with external resistor
  Feedback Voltage: 2.5 V
- Built-in Short Current Limit Circuit ····· Typ. 150 mA
- Built-in Fold-Back Protection Circuit ····· Min. 1.1 A
- Built-in Thermal Shutdown Circuit ····· Typ. 160°C
- Built-in Soft-start Circuit ····· R1518xxxxB/C/D: Typ.120 µs
  R1518Jxx1E/F: Time adjustable
- Ceramic Capacitors can be used ····· R1518xxxxB/D/E/F: 0.1 µF or more
  R1518x001C: 1.0 µF or more

## APPLICATIONS

- Power source for car accessories including car audio equipment, car navigation system, and ETC system.
- Power source for control units including EV inverter and charge control.

## BLOCK DIAGRAMS

**R1518xxxxB**

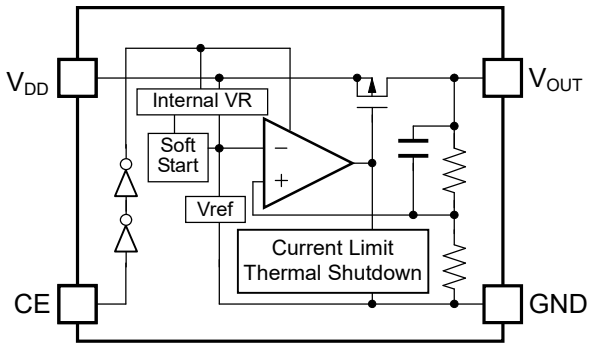


**R1518x001C**

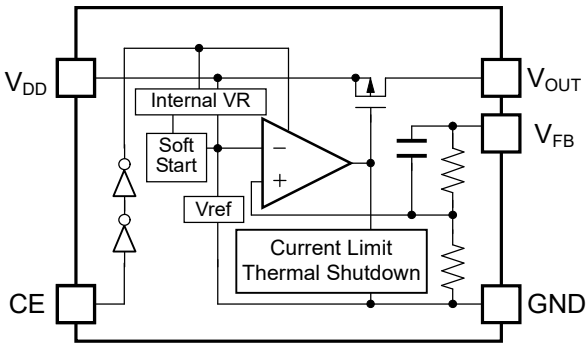


**R1518xxxxD**

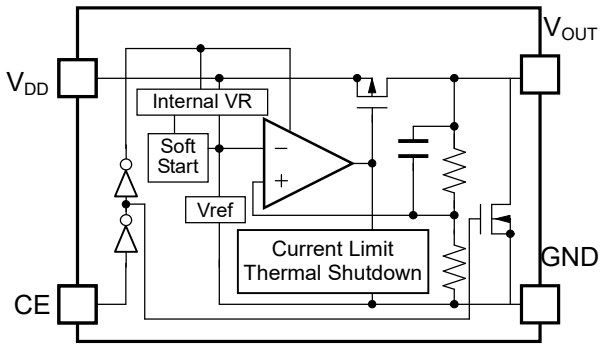


**R1518Jxx1E**

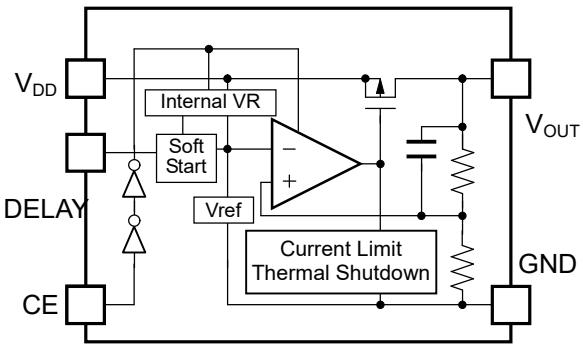


**R1518Jxx1F**

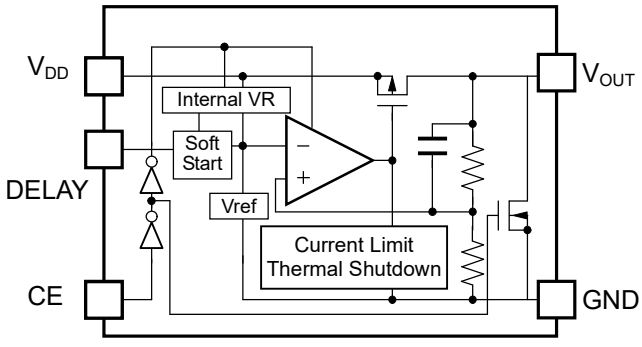

# SELECTION GUIDE

The output voltage, version, and package type for this device can be selected at the user's request.

| Product Name | Package | Quantity per Reel | Pb Free | Halogen Free |
|---|---|---|---|---|
| R1518Sxx2∗-E2-#E | HSOP-6J | 1,000 pcs | Yes | Yes |
| R1518S001C-E2-#E | | | | |
| R1518Jxx1∗-T1-#E | TO-252-5-P2 | 3,000 pcs | Yes | Yes |
| R1518J001C-T1-#E | | | | |

xx: Specify the set output voltage ($V_{SET}$)
2.5 V (25) / 2.8 V (28) / 3.0 V (30) / 3.3 V (33) / 3.4 V (34) / 5.0 V (50) / 6.0 V (60) /
8.0 V (80) / 8.5 V (85) / 9.0 V (90)

Adjustable output voltage setting type is fixed to (00)
**Note: For R1518S001C-E2-#E and R1518J001C-T1-#E (No auto-discharge function)**

∗ : Specify the version with desired functions
B: No auto-discharge function
D: Auto-discharge function
E: No auto-discharge function / Adjustable soft-start time setting
F: Auto-discharge function / Adjustable soft-start time setting

**Note: R1518Sxx2∗-E2-#E can provide R1518Sxx2B/D only.**

# : Specify Automotive Class Code

| | Operating Temperature Range | Guaranteed Specs Temperature Range | Screening |
|---|---|---|---|
| A | −40°C to 125°C | 25°C | High temperature |
| K | −40°C to 125°C | −40°C to 125°C | High and low temperature |

Auto-discharge function quickly lowers the output voltage to 0 V by releasing the electrical charge in the external capacitor when the chip enable signal is switched from the active mode to the standby mode.

## PIN DESCRIPTION

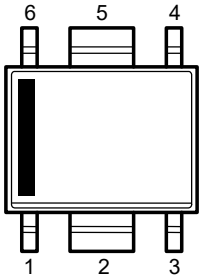


**HSOP-6J**

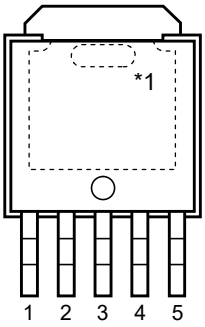


**TO-252-5-P2**

**HSOP-6J**

| Pin No. | Symbol | Description | |
|---|---|---|---|
| 1 | $V_{DD}$ | Input Pin | |
| 2 | GND | Ground Pin | |
| 3 | GND | Ground Pin | R1518Sxx2B/D |
| | $V_{FB}$ | Feedback Pin | R1518S001C |
| 4 | CE | Chip Enable Pin, Active-high | |
| 5 | GND | Ground Pin | |
| 6 | $V_{OUT}$ | Output Pin | |

**TO-252-5-P2**

| Pin No. | Symbol | Description | |
|---|---|---|---|
| 1 | $V_{DD}$ | Input Pin | |
| 2 | NC | No Connection | R1518Jxx1B/D |
| | $V_{FB}$ | Feedback Pin | R1518J001C |
| | DELAY | Adjustable Soft-start Time Pin | R1518Jxx1E/F |
| 3 | GND | Ground Pin | |
| 4 | CE | Chip Enable Pin, Active-high | |
| 5 | $V_{OUT}$ | Output Pin | |

*1 The tab on the bottom of the package enhances thermal performance and is electrically connected to GND (substrate level). The tab is recommended to connect to the ground plane on the board. Otherwise it may be left floating.

## PIN EQUIVALENT CIRCUIT DIAGRAMS

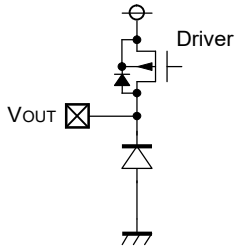


**$V_{OUT}$ Pin**

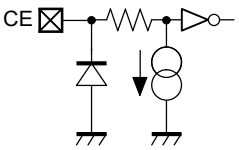


**CE Pin**

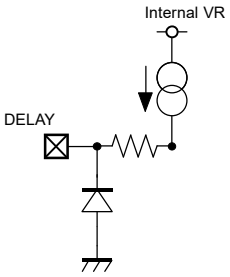


**DELAY Pin**
**(R1518Jxx1E/F)**

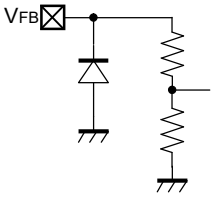


**$V_{FB}$ Pin**
**(R1518x001C)**

## ABSOLUTE MAXMUM RATINGS

| Symbol | Item | | Rating | Unit |
|---|---|---|---|---|
| $V_{IN}$ | Input Voltage | | −0.3 to 50 | V |
| $V_{IN}$ | Peak Input Voltage[*1] | | 60 | V |
| $V_{CE}$ | Input Voltage (CE Pin) | | −0.3 to 50 | V |
| $V_{FB}$ | Input Voltage ($V_{FB}$ Pin) | | −0.3 to 50 | V |
| $V_{OUT}$ | Output Voltage | | −0.3 to $V_{IN}$ + 0.3 ≤ 50 | V |
| $P_D$ | Power Dissipation [*2] (JEDEC STD.51) | HSOP-6J | 3400 | mW |
| | | TO-252-5-P2 | 4800 | |
| Tj | Junction Temperature | | −40 to 150 | °C |
| Tstg | Storage Temperature Range | | −55 to 150 | °C |

[*1] Duration time = 200 ms

[*2] Refer to *POWER DISSIPATION* for detailed information.

**ABSOLUTE MAXIMUM RATINGS**

Electronic and mechanical stress momentarily exceeded absolute maximum ratings may cause the permanent damage and may degrade the life time and safety for both device and system using the device in the field. The functional operation at or over these absolute maximum ratings is not assured.

## RECOMMENDED OPERATING CONDITIONS

| Symbol | Item | Rating | Unit |
|---|---|---|---|
| $V_{IN}$ | Input Voltage | 3.5 to 36 | V |
| Ta | Operating Temperature Range | −40 to 125 | °C |

**RECOMMENDED OPERATING CONDITIONS**

All of electronic equipment should be designed that the mounted semiconductor devices operate within the recommended operating conditions. The semiconductor devices cannot operate normally over the recommended operating conditions, even if they are used over such conditions by momentary electronic noise or surge. And the semiconductor devices may receive serious damage when they continue to operate over the recommended operating conditions.

# ELECTRICAL CHARACTERISTICS

$V_{IN}$ = $V_{SET}$ + 1.0 V, $I_{OUT}$ = 1 mA, $C_{IN}$ = $C_{OUT}$ = 0.1 µF, unless otherwise noted.

The specifications surrounded by ☐ are guaranteed by design engineering at -40°C ≤ Ta ≤ 125°C.

**R1518xxxxB/D (-AE)** (Ta = 25°C)

| Symbol | Item | Conditions | | Min. | Typ. | Max. | Unit |
|---|---|---|---|---|---|---|---|
| $V_{OUT}$ | Output Voltage | Ta = 25°C | $V_{SET}$ ≤ 5.0 V | ×0.992 | | ×1.008 | V |
| | | | $V_{SET}$ > 5.0 V | ×0.99 | | ×1.01 | V |
| | | −40°C ≤ Ta ≤ 125°C | $V_{SET}$ ≤ 5.0 V | ×0.982 | | ×1.018 | V |
| | | | $V_{SET}$ > 5.0 V | ×0.98 | | ×1.02 | V |
| $\Delta V_{OUT}$ /$\Delta I_{OUT}$ | Load Regulation | $V_{IN}$ = $V_{SET}$ + 2.0 V<br>1 mA ≤ $I_{OUT}$ ≤ 250 mA | | −15 | 3 | 25 | mV |
| | | $V_{IN}$ = $V_{SET}$ + 2.0 V<br>1 mA ≤ $I_{OUT}$ ≤ 1 A | | −60 | 10 | 60 | mV |
| $V_{DIF}$ | Dropout Voltage | $I_{OUT}$ = 1 A | | Refer to the *Product-specific Electrical Characteristics* | | | |
| $I_{SS}$ | Supply Current | $I_{OUT}$ = 0 mA | | | 18 | 36 | µA |
| I standby | Standby Current | $V_{CE}$ = 0 V | | | 0.1 | 2.0 | µA |
| $\Delta V_{OUT}$ /$\Delta V_{IN}$ | Line Regulation | $V_{SET}$ + 0.5 V ≤ $V_{IN}$ ≤ 36 V,<br>Under the condition of $V_{IN}$ ≥ 3.5 V | | | 0.01 | 0.02 | %/V |
| $I_{LIM}$ | Output Current Limit | $V_{IN}$ = $V_{SET}$ + 2.0 V | | 1.1 | 1.8 | 2.5 | A |
| $I_{SC}$ | Short Current Limit | $V_{IN}$ =5.0 V, $V_{OUT}$ = 0 V | | 110 | 180 | 250 | mA |
| $I_{PD}$ | CE Pull-down Current | $V_{CE}$ = 5.0 V | | | 0.2 | 0.6 | µA |
| | | $V_{CE}$ = 36 V | | | 0.5 | 1.3 | µA |
| $t_{D1}$ | Soft-start Time 1 | | | | 120 | | µs |
| $V_{CEH}$ | CE Input Voltage "H" | | | 2.2 | | 36 | V |
| $V_{CEL}$ | CE Input Voltage "L" | | | 0 | | 1.0 | V |
| $T_{TSD}$ | Thermal Shutdown Temperature | Junction Temperature | | 150 | 160 | | °C |
| $T_{TSR}$ | Thermal Shutdown Released Temperature | Junction Temperature | | 125 | 135 | | °C |
| $R_{LOW}$ | Low Output Nch Tr. ON Resistance (R1518xxxxD) | $V_{IN}$ = 14.0 V, $V_{CE}$ = 0 V | | 1.0 | 3.2 | 5.0 | kΩ |

All test items listed under Electrical Characteristics are done under the pulse load condition (Tj ≈ Ta = 25°C) except for Soft-start Time 1.

$V_{IN}$ = $V_{FB}$ ( = 2.5 V) + 1.0 V = 3.5 V, $I_{OUT}$ = 1 mA, $C_{IN}$ = 0.1 µF, $C_{OUT}$ = 1.0 µF unless otherwise noted.

The specifications surrounded by ▭ are guaranteed by design engineering at -40°C ≤ Ta ≤ 125°C.

**R1518x001C (-AE)** (Ta = 25°C)

| Symbol | Item | Conditions | Min. | Typ. | Max. | Unit |
|---|---|---|---|---|---|---|
| $V_{FB}$ | Feedback Voltage | Ta = 25°C | 2.480 | | 2.520 | V |
| | | −40°C ≤ Ta ≤ 125°C | 2.455 | | 2.545 | V |
| $\Delta V_{OUT}$ /$\Delta I_{OUT}$ | Load Regulation | $V_{IN}$ = 4.5V<br>1 mA ≤ $I_{OUT}$ ≤ 250 mA | −10 | 3 | 10 | mV |
| | | $V_{IN}$ = 4.5V<br>1 mA ≤ $I_{OUT}$ ≤ 1 A | −25 | 5 | 35 | mV |
| $V_{DIF}$ | Dropout Voltage | $I_{OUT}$ = 1 A | | 1.0 | 1.8 | V |
| $I_{SS}$ | Supply Current | $I_{OUT}$ = 0 mA | | 18 | 36 | µA |
| Istandby | Standby Current | $V_{CE}$ = 0 V | | 0.1 | 2.0 | µA |
| $\Delta V_{OUT}$ /$\Delta V_{IN}$ | Line Regulation | 3.5 V ≤ $V_{IN}$ ≤ 36 V | | 0.01 | 0.02 | %/V |
| $I_{LIM}$ | Output Current Limit | $V_{IN}$ = 4.5 V | 1.1 | 1.8 | 2.5 | A |
| $I_{SC}$ | Short Current Limit | $V_{IN}$ = 5.0 V, $V_{OUT}$ = $V_{FB}$ = 0 V | 110 | 180 | 250 | mA |
| $I_{PD}$ | CE Pull-down Current | $V_{CE}$ = 5.0 V | | 0.2 | 0.6 | µA |
| | | $V_{CE}$ = 36 V | | 0.5 | 1.3 | µA |
| $t_{D1}$ | Soft-start Time 1 | | | 120 | | µs |
| $V_{CEH}$ | CE Input Voltage "H" | | 2.2 | | 36 | V |
| $V_{CEL}$ | CE Input Voltage "L" | | 0 | | 1.0 | V |
| $T_{TSD}$ | Thermal Shutdown Temperature | Junction Temperature | 150 | 160 | | °C |
| $T_{TSR}$ | Thermal Shutdown Released Temperature | Junction Temperature | 125 | 135 | | °C |

$V_{OUT}$ = $V_{FB}$ = 2.5 V (excluding short circuit current)

All test items listed under Electrical Characteristics are done under the pulse load condition (Tj ≈ Ta = 25°C) except for Soft-start Time 1.

$V_{IN}$ = $V_{SET}$ + 1.0 V, $I_{OUT}$ = 1 mA, $C_{IN}$ = $C_{OUT}$ = 0.1 µF, unless otherwise noted.

The specifications surrounded by [ ] are guaranteed by design engineering at -40°C ≤ Ta ≤ 125°C.

**R1518Jxx1E/F (-AE)** (Ta = 25°C)

| Symbol | Item | Conditions | | Min. | Typ. | Max. | Unit |
|---|---|---|---|---|---|---|---|
| $V_{OUT}$ | Output Voltage | Ta = 25°C | $V_{SET}$ ≤ 5.0 V | ×0.992 | | ×1.008 | V |
| | | | $V_{SET}$ > 5.0 V | ×0.99 | | ×1.01 | V |
| | | −40°C ≤ Ta ≤ 125°C | $V_{SET}$ ≤ 5.0 V | [×0.982] | | [×1.018] | V |
| | | | $V_{SET}$ > 5.0 V | [×0.98] | | [×1.02] | V |
| $\Delta V_{OUT}$ /$\Delta I_{OUT}$ | Load Regulation | $V_{IN}$ = $V_{SET}$ + 2.0 V<br>1 mA ≤ $I_{OUT}$ ≤ 250 mA | | [−15] | 3 | [25] | mV |
| | | $V_{IN}$ = $V_{SET}$ + 2.0 V<br>1 mA ≤ $I_{OUT}$ ≤ 1 A | | [−60] | 10 | [60] | mV |
| $V_{DIF}$ | Dropout Voltage | $I_{OUT}$ = 1 A | | Refer to the *Product-specific Electrical Characteristics* | | | |
| $I_{SS}$ | Supply Current | $I_{OUT}$ = 0 mA | | | 18 | [36] | µA |
| Istandby | Standby Current | $V_{CE}$ = 0 V | | | 0.1 | [2.0] | µA |
| $\Delta V_{OUT}$ /$\Delta V_{IN}$ | Line Regulation | $V_{SET}$ + 0.5 V ≤ $V_{IN}$ ≤ 36 V,<br>Under the condition of $V_{IN}$ ≥ 3.5 V | | | 0.01 | [0.02] | %/V |
| $I_{LIM}$ | Output Current Limit | $V_{IN}$ = $V_{SET}$ + 2.0 V | | [1.1] | 1.8 | [2.5] | A |
| $I_{SC}$ | Short Current Limit | $V_{IN}$ = 5.0 V, $V_{OUT}$ = 0 V | | [110] | 180 | [250] | mA |
| $I_{PD}$ | CE Pull-down Current | $V_{CE}$ = 5.0 V | | | 0.2 | [0.6] | µA |
| | | $V_{CE}$ = 36 V | | | 0.5 | [1.3] | µA |
| $I_{DELAY}$ | DELAY Current | DELAY = GND | | [1.5] | 2.5 | [3.5] | µA |
| $t_{D1}$ | Soft-start Time 1 | DELAY = OPEN | | | 26 | | µs |
| $t_{D2}$ | Soft-start Time 2 | DELAY = 0.001 µF | | 210 | 290 | 415 | µs |
| $V_{CEH}$ | CE Input Voltage "H" | | | [2.2] | | [36] | V |
| $V_{CEL}$ | CE Input Voltage "L" | | | [0] | | [1.0] | V |
| $T_{TSD}$ | Thermal Shutdown Temperature | Junction Temperature | | [150] | 160 | | °C |
| $T_{TSR}$ | Thermal Shutdown Released Temperature | Junction Temperature | | [125] | 135 | | °C |
| $R_{LOW}$ | Low Output Nch Tr. ON Resistance (R1518Jxx1F) | $V_{IN}$ = 14.0 V, $V_{CE}$ = 0 V | | [1.0] | 3.2 | [5.0] | kΩ |

All test items listed under Electrical Characteristics are done under the pulse load condition (Tj ≈ Ta = 25°C) except for Soft-start Time 1 and Soft-start Time 2.

The specifications surrounded by [ ] are guaranteed by design engineering at -40°C ≤ Ta ≤ 125°C.

**R1518Jxx1B/D/E/F (-AE), R1518Sxx2B/D (-AE) Product-specific Electrical Characteristics** (Ta = 25°C)

| Product Name | $V_{OUT}$ [V] (Ta = 25°C) | | | $V_{OUT}$ [V] (−40°C ≤ Ta ≤ 125°C) | | | $V_{DIF}$ [V] | |
|---|---|---|---|---|---|---|---|---|
| | Min. | Typ. | Max. | Min. | Typ. | Max. | Typ. | Max. |
| R1518x25xx | 2.480 | 2.500 | 2.520 | [2.455] | 2.500 | [2.545] | 1.00 | [1.80] |
| R1518x28xx | 2.778 | 2.800 | 2.822 | [2.750] | 2.800 | [2.850] | | |
| R1518x30xx | 2.976 | 3.000 | 3.024 | [2.946] | 3.000 | [3.054] | | |
| R1518x33xx | 3.274 | 3.300 | 3.326 | [3.241] | 3.300 | [3.359] | 0.90 | [1.60] |
| R1518x34xx | 3.373 | 3.400 | 3.427 | [3.339] | 3.400 | [3.461] | | |
| R1518x50xx | 4.960 | 5.000 | 5.040 | [4.910] | 5.000 | [5.090] | 0.70 | [1.30] |
| R1518x60xx | 5.940 | 6.000 | 6.060 | [5.880] | 6.000 | [6.120] | | |
| R1518x80xx | 7.920 | 8.000 | 8.080 | [7.840] | 8.000 | [8.160] | | |
| R1518x85xx | 8.415 | 8.500 | 8.585 | [8.330] | 8.500 | [8.670] | 0.65 | [1.10] |
| R1518x90xx | 8.910 | 9.000 | 9.090 | [8.820] | 9.000 | [9.180] | | |

$V_{IN}$ = $V_{SET}$ + 1.0 V, $I_{OUT}$ = 1 mA, $C_{IN}$ = $C_{OUT}$ = 0.1 µF, unless otherwise noted.

**R1518xxxxB/D (-KE)** (−40 ≤ Ta ≤ 125°C)

| Symbol | Item | Conditions | | Min. | Typ. | Max. | Unit |
|---|---|---|---|---|---|---|---|
| $V_{OUT}$ | Output Voltage | Ta = 25°C | $V_{SET}$ ≤ 5.0 V | ×0.992 | | ×1.008 | V |
| | | | $V_{SET}$ > 5.0 V | ×0.99 | | ×1.01 | V |
| | | −40°C ≤ Ta ≤ 125°C | $V_{SET}$ ≤ 5.0 V | ×0.982 | | ×1.018 | V |
| | | | $V_{SET}$ > 5.0 V | ×0.98 | | ×1.02 | V |
| $\Delta V_{OUT}$ /$\Delta I_{OUT}$ | Load Regulation | $V_{IN}$ = $V_{SET}$ + 2.0 V<br>1 mA ≤ $I_{OUT}$ ≤ 250 mA | | −15 | 3 | 25 | mV |
| | | $V_{IN}$ = $V_{SET}$ + 2.0 V<br>1 mA ≤ $I_{OUT}$ ≤ 1 A | | −60 | 10 | 60 | mV |
| $V_{DIF}$ | Dropout Voltage | $I_{OUT}$ = 1 A | | Refer to the *Product-specific Electrical Characteristics* | | | |
| $I_{SS}$ | Supply Current | $I_{OUT}$ = 0 mA | | | 18 | 36 | µA |
| Istandby | Standby Current | $V_{CE}$ = 0 V | | | 0.1 | 2.0 | µA |
| $\Delta V_{OUT}$ /$\Delta V_{IN}$ | Line Regulation | $V_{SET}$ + 0.5 V ≤ $V_{IN}$ ≤ 36 V,<br>Under the condition of $V_{IN}$ ≥ 3.5 V | | | 0.01 | 0.02 | %/V |
| $I_{LIM}$ | Output Current Limit | $V_{IN}$ = $V_{SET}$ + 2.0 V | | 1.1 | 1.8 | 2.5 | A |
| $I_{SC}$ | Short Current Limit | $V_{IN}$ = 5.0 V, $V_{OUT}$ = 0 V | | 110 | 180 | 250 | mA |
| $I_{PD}$ | CE Pull-down Current | $V_{CE}$ = 5.0 V | | | 0.2 | 0.6 | µA |
| | | $V_{CE}$ = 36 V | | | 0.5 | 1.3 | µA |
| $V_{CEH}$ | CE Input Voltage "H" | | | 2.2 | | 36 | V |
| $V_{CEL}$ | CE Input Voltage "L" | | | 0 | | 1.0 | V |
| $T_{TSD}$ | Thermal Shutdown Temperature | Junction Temperature | | 150 | 160 | | °C |
| $T_{TSR}$ | Thermal Shutdown Released Temperature | Junction Temperature | | 125 | 135 | | °C |
| $R_{LOW}$ | Low Output Nch Tr. ON Resistance (R1518xxxxD) | $V_{IN}$ = 14.0 V, $V_{CE}$ = 0 V | | 1.0 | 3.2 | 5.0 | kΩ |

$V_{IN}$ = $V_{FB}$ ( = 2.5 V) + 1.0 V = 3.5 V, $I_{OUT}$ = 1 mA, $C_{IN}$ = 0.1 µF, $C_{OUT}$ = 1.0 µF unless otherwise noted.

**R1518x001C (-KE)** (−40 ≤ Ta ≤ 125°C)

| Symbol | Item | Conditions | Min. | Typ. | Max. | Unit |
|---|---|---|---|---|---|---|
| $V_{FB}$ | Feedback Voltage | Ta = 25°C | 2.480 | | 2.520 | V |
| | | −40°C ≤ Ta ≤ 125°C | 2.455 | | 2.545 | V |
| $\Delta V_{OUT}$ /$\Delta I_{OUT}$ | Load Regulation | $V_{IN}$ =4.5 V<br>1 mA ≤ $I_{OUT}$ ≤ 250 mA | −10 | 3 | 10 | mV |
| | | $V_{IN}$ = 4.5 V<br>1 mA ≤ $I_{OUT}$ ≤ 1 A | −25 | 5 | 35 | mV |
| $V_{DIF}$ | Dropout Voltage | $I_{OUT}$ = 1 A | | 1.0 | 1.8 | V |
| $I_{SS}$ | Supply Current | $I_{OUT}$ = 0 mA | | 18 | 36 | µA |
| Istandby | Standby Current | $V_{CE}$ = 0 V | | 0.1 | 2.0 | µA |
| $\Delta V_{OUT}$ /$\Delta V_{IN}$ | Line Regulation | 3.5 V ≤ $V_{IN}$ ≤ 36 V | | 0.01 | 0.02 | %/V |
| $I_{LIM}$ | Output Current Limit | $V_{IN}$ = 4.5 V | 1.1 | 1.8 | 2.5 | A |
| $I_{SC}$ | Short Current Limit | VIN = 5.0 V, $V_{OUT}$ = $V_{FB}$ = 0 V | 110 | 180 | 250 | mA |
| $I_{PD}$ | CE Pull-down Current | $V_{CE}$ = 5.0 V | | 0.2 | 0.6 | µA |
| | | $V_{CE}$ = 36 V | | 0.5 | 1.3 | µA |
| $V_{CEH}$ | CE Input Voltage "H" | | 2.2 | | 36 | V |
| $V_{CEL}$ | CE Input Voltage "L" | | 0 | | 1.0 | V |
| $T_{TSD}$ | Thermal Shutdown Temperature | Junction Temperature | 150 | 160 | | °C |
| $T_{TSR}$ | Thermal Shutdown Released Temperature | Junction Temperature | 125 | 135 | | °C |

$V_{OUT}$ = $V_{FB}$ = 2.5 V (excluding short circuit current)

$V_{IN}$ = $V_{SET}$ +1.0 V, $I_{OUT}$ = 1 mA, $C_{IN}$ = $C_{OUT}$ = 0.1 µF, unless otherwise noted.

**R1518Jxx1E/F (-KE)** (−40 ≤ Ta ≤ 125°C)

| Symbol | Item | Conditions | | Min. | Typ. | Max. | Unit |
|---|---|---|---|---|---|---|---|
| $V_{OUT}$ | Output Voltage | Ta = 25°C | $V_{SET}$ ≤ 5.0 V | ×0.992 | | ×1.008 | V |
| | | | $V_{SET}$ > 5.0 V | ×0.99 | | ×1.01 | V |
| | | −40°C ≤ Ta ≤ 125°C | $V_{SET}$ ≤ 5.0 V | ×0.982 | | ×1.018 | V |
| | | | $V_{SET}$ > 5.0 V | ×0.98 | | ×1.02 | V |
| $\Delta V_{OUT}$ /$\Delta I_{OUT}$ | Load Regulation | $V_{IN}$ = $V_{SET}$ + 2.0 V<br>1 mA ≤ $I_{OUT}$ ≤ 250 mA | | −15 | 3 | 25 | mV |
| | | $V_{IN}$ = $V_{SET}$ + 2.0 V<br>1 mA ≤ $I_{OUT}$ ≤ 1 A | | −60 | 10 | 60 | mV |
| $V_{DIF}$ | Dropout Voltage | $I_{OUT}$ = 1 A | | Refer to the *Product-specific Electrical Characteristics* | | | |
| $I_{SS}$ | Supply Current | $I_{OUT}$ = 0 mA | | | 18 | 36 | µA |
| Istandby | Standby Current | $V_{CE}$ = 0 V | | | 0.1 | 2.0 | µA |
| $\Delta V_{OUT}$ /$\Delta V_{IN}$ | Line Regulation | $V_{SET}$ + 0.5 V ≤ $V_{IN}$ ≤ 36 V,<br>Under the condition of $V_{IN}$ ≥ 3.5 V | | | 0.01 | 0.02 | %/V |
| $V_{IN}$ | Input Voltage | | | 3.5 | | 36 | V |
| $I_{LIM}$ | Output Current Limit | $V_{IN}$ = $V_{SET}$ + 2.0 V | | 1.1 | 1.8 | 2.5 | A |
| $I_{SC}$ | Short Current Limit | VIN = 5.0 V, $V_{OUT}$ = 0 V | | 110 | 180 | 250 | mA |
| $I_{PD}$ | CE Pull-down Current | $V_{CE}$ = 5.0 V | | | 0.2 | 0.6 | µA |
| | | $V_{CE}$ = 36 V | | | 0.5 | 1.3 | µA |
| $I_{DELAY}$ | DELAY Current | DELAY = GND | | 1.5 | 2.5 | 3.5 | µA |
| $V_{CEH}$ | CE Input Voltage "H" | | | 2.2 | | 36 | V |
| $V_{CEL}$ | CE Input Voltage "L" | | | 0 | | 1.0 | V |
| $T_{TSD}$ | Thermal Shutdown Temperature | Junction Temperature | | 150 | 160 | | °C |
| $T_{TSR}$ | Thermal Shutdown Released Temperature | Junction Temperature | | 125 | 135 | | °C |
| $R_{LOW}$ | Low Output Nch Tr. ON Resistance (R1518Jxx1F) | $V_{IN}$ = 14.0 V, $V_{CE}$ = 0 V | | 1.0 | 3.2 | 5.0 | kΩ |

**R1518Jxx1B/D/E/F (-KE), R1518Sxx2B/D (-KE) Product-specific Electrical Characteristics**

(−40 ≤ Ta ≤ 125°C)

| Product Name | $V_{OUT}$ [V] (Ta = 25°C) | | | $V_{OUT}$ [V] (−40°C ≤ Ta ≤ 125°C) | | | $V_{DIF}$ [V] | |
|---|---|---|---|---|---|---|---|---|
| | Min. | Typ. | Max. | Min. | Typ. | Max. | Typ. | Max. |
| R1518x25xx | 2.480 | 2.500 | 2.520 | 2.455 | 2.500 | 2.545 | 1.00 | 1.80 |
| R1518x28xx | 2.778 | 2.800 | 2.822 | 2.750 | 2.800 | 2.850 | | |
| R1518x30xx | 2.976 | 3.000 | 3.024 | 2.946 | 3.000 | 3.054 | | |
| R1518x33xx | 3.274 | 3.300 | 3.326 | 3.241 | 3.300 | 3.359 | 0.90 | 1.60 |
| R1518x34xx | 3.373 | 3.400 | 3.427 | 3.339 | 3.400 | 3.461 | | |
| R1518x50xx | 4.960 | 5.000 | 5.040 | 4.910 | 5.000 | 5.090 | 0.70 | 1.30 |
| R1518x60xx | 5.940 | 6.000 | 6.060 | 5.880 | 6.000 | 6.120 | | |
| R1518x80xx | 7.920 | 8.000 | 8.080 | 7.840 | 8.000 | 8.160 | | |
| R1518x85xx | 8.415 | 8.500 | 8.585 | 8.330 | 8.500 | 8.670 | 0.65 | 1.10 |
| R1518x90xx | 8.910 | 9.000 | 9.090 | 8.820 | 9.000 | 9.180 | | |

## TYPICAL APPLICATION

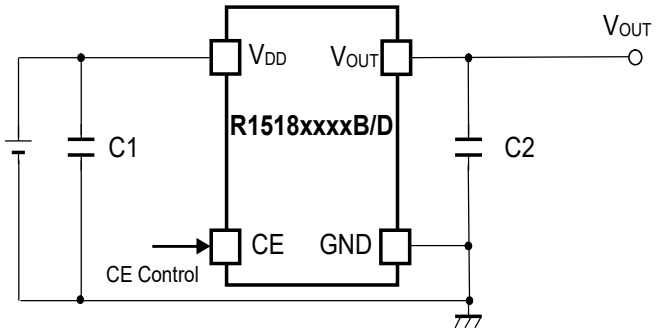


**R1518xxxxB/D Typical Application**

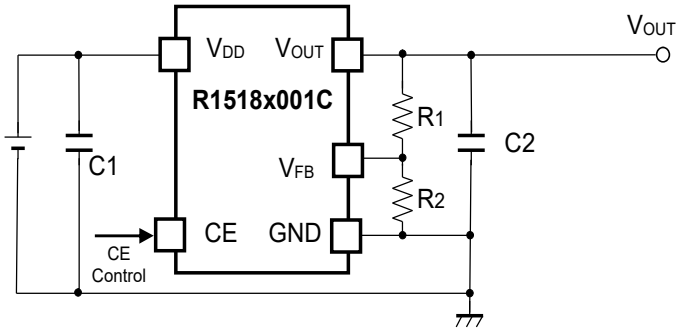


**R1518x001C Typical Application**

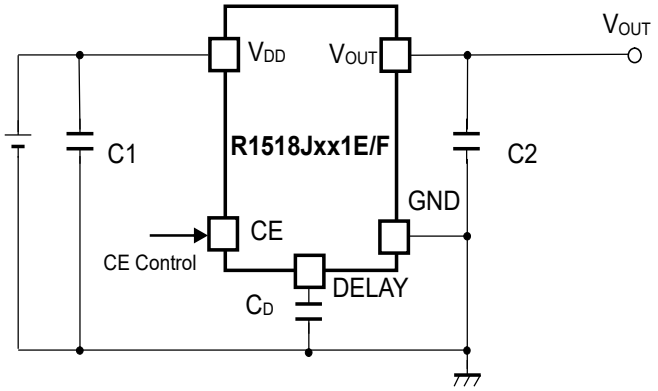


**R1518Jxx1E/F Typical Application**

**External Components :**

| Symbol | Description |
|---|---|
| **R1518xxxxB/D/E/F** | |
| C1 | 0.1 µF (Ceramic) |
| C2 | 0.1 µF (Ceramic) |
| **R1518x001C** | |
| C1 | 0.1 µF (Ceramic) |
| C2 | 1.0 µF (Ceramic) |

# TECHNICAL NOTES

**Phase Compensation**

In LDO regulators, phase compensation is provided to secure stable operation even when the load current is varied. For this purpose, use 0.1 µF or more (R1518xxxxB/D/E/F), 1.0 µF or more (R1518x001C) of the capacitor C2. When using a tantalum type capacitor and the ESR (Equivalent Series Resistance) value is large, the output might be unstable. Evaluate the circuit including consideration of frequency characteristics.

For the externally adjustable output voltage type (R1518x001C), use 10 kΩ or lower resistance R2.

**PCB Layout**

Ensure the $V_{DD}$ and GND lines are sufficiently robust. If their impedance is too high, noise pickup or unstable operation may result. Connect 0.1 µF or more of the capacitor C1 between the $V_{DD}$ and GND, and as close as possible to the pins.

In addition, connect the capacitor C2 between $V_{OUT}$ and GND, and as close as possible to the pins.

# TYPICAL APPLICATION FOR IC CHIP BREAKDOWN PREVENTION

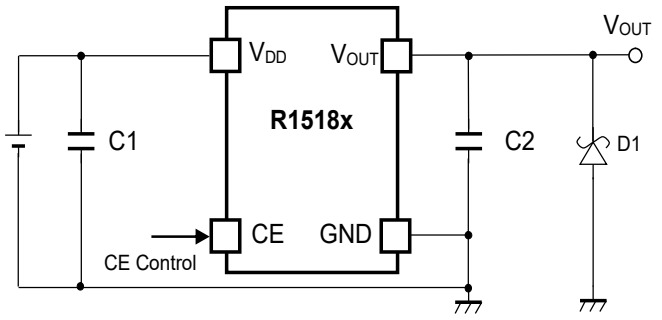


When a sudden surge of electrical current travels along the $V_{OUT}$ pin and GND due to a short-circuit, electrical resonance of a circuit involving an output capacitor (C2) and a short circuit inductor generates a negative voltage and may damage the device or the load devices. Connecting a schottky diode (D1) between the $V_{OUT}$ pin and GND has the effect of preventing damage to them.

# OPERATION DESCRIPTION

### Thermal Shutdown Function

Thermal shutdown function is included in this device. If the junction temperature is more than or equal to 160°C (Typ.), the operation of the regulator would stop. After that, when the junction temperature is less than or equal to 135°C (Typ.), the operation of the regulator would restart. Unless the cause of rising temperature is removed, the regulator repeats on and off, and output waveform would be like consecutive pulses.

### Adjustable Output Voltage Setting (R1518x001C)

The output voltage of R1518x001C can be adjusted by using the external divider resistors (R1, R2). By using the following equation, the output voltage ($V_{OUT}$) can be determined. The voltage which is fixed inside the IC is described as $V_{FB}$.

$$V_{OUT} = V_{FB} \times ((R1 + R2) / R2)$$

Recommended Range: 2.5 V ≤ $V_{OUT}$ ≤ 20.0 V
$V_{FB}$ = 2.5 V

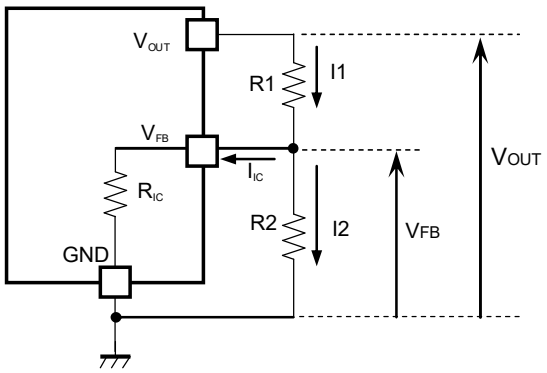


**Output Voltage Adjustment Using External Divider Resistors (R1, R2)**

$R_{IC}$ of the R1518x001C is approximately Typ. 1.35 MΩ (Ta=25°C, guaranteed by design engineering). For better accuracy, setting R1 << $R_{IC}$ reduces errors. The resistance value for R2 should be set to 10 kΩ or lower. It is easily affected by noises when setting the value of R1 and R2 larger, which makes the impedance of $V_{FB}$ pin larger.

$R_{IC}$ could be affected by the temperature, therefore evaluate the circuit taking the actual conditions of use into account when deciding the resistance values for R1 and R2.

**Soft-start Function**

R1518x is equipped with a constant slope circuit, which achieves a soft-start function. This circuit allows the output voltage to start up gradually when the CE is turned on. The constant slope circuit minimizes the inrush current at the start-up and also prevents the overshoot of the output voltage. For R1518xxxxB/C/D, the capacitor to create the start-up slope is built in this device that does not require any external components. The start-up time and the start-up slope angle are fixed inside the device. As for R1518Jxx1E/F, the soft-start time is adjustable by inserting the external capacitor to DELAY pin. By using the following equation, the relation between the soft-start time $t_D$ [s] and DELAY pin capacitor $C_D$ [F] is determined.

$$t_D = ((C_D + 90 \times 10^{-12}) / I_{DELAY}) \times 0.73$$

When the capacitor $C_D$ of R1518Jxx1E/F is not used, use the DELAY pin as OPEN. At that time, $C_D$ = 0 in the above equation, therefore the start-up time is about 26 µs. However, be sure to consider approximately 50 µs of CE delay time.

The capacity ($C_D$) of the DELAY pin is discharged when $V_{IN}$ is input and CE = L. If the $C_D$ is restarted without being discharged, the soft start time may be shorter than the set time.

**Conventional Inrush Current Limit Circuit**

(Diagrammatic sketch)

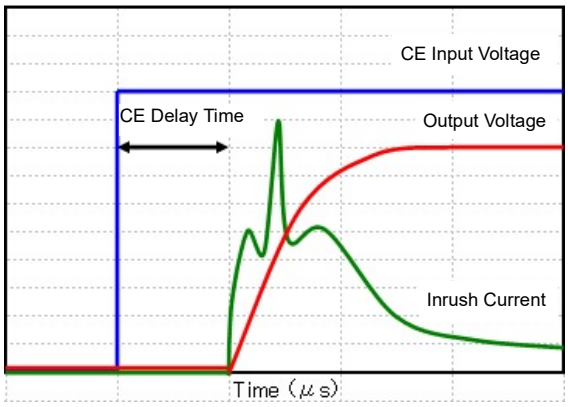


**Constant Slope Circuit**

(Diagrammatic sketch)

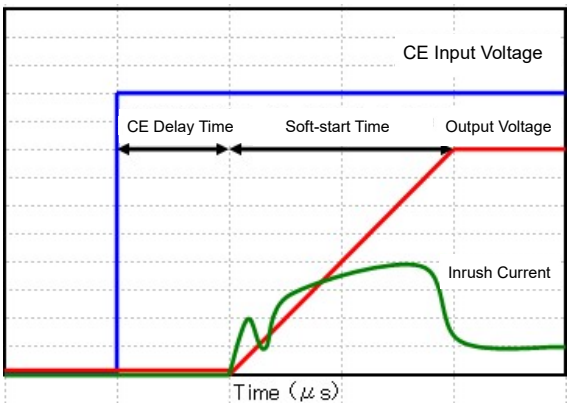

# TYPICAL CHARACTERISTICS

Note: Typical Characteristics are intended to be used as reference data; they are not guaranteed.

### 1) Output Voltage vs. Output Current (Ta = 25°C)

**R1518x25xx, R1518x001C**

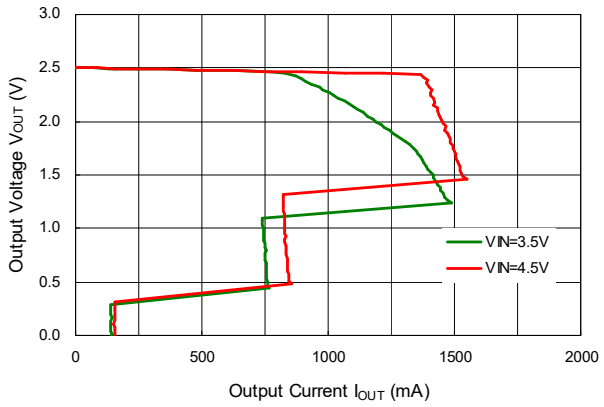


**R1518x33xx**

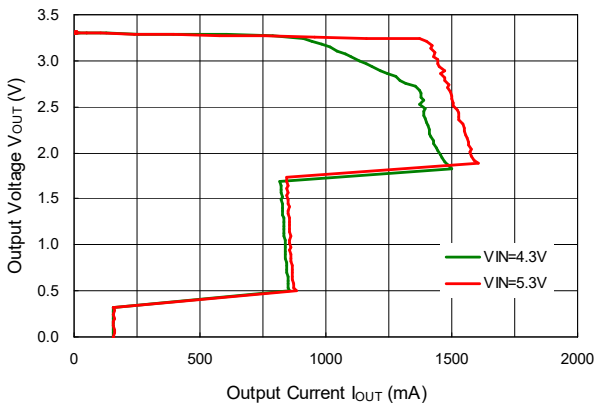


**R1518x50xx**

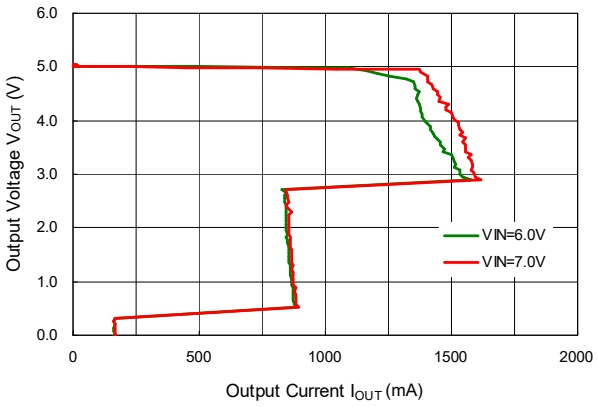


**R1518x85xx**

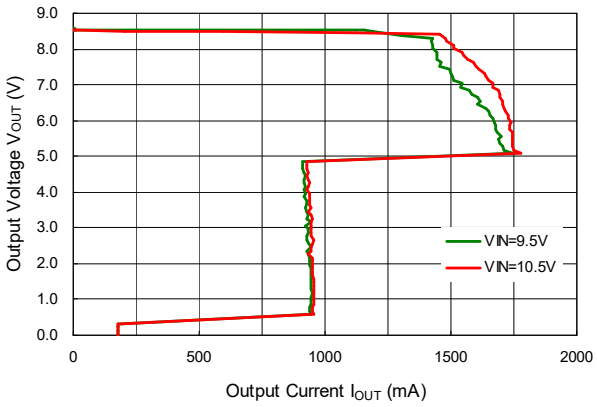


### 2) Output Voltage vs. Input Voltage (Ta = 25°C)

**R1518x25xx**

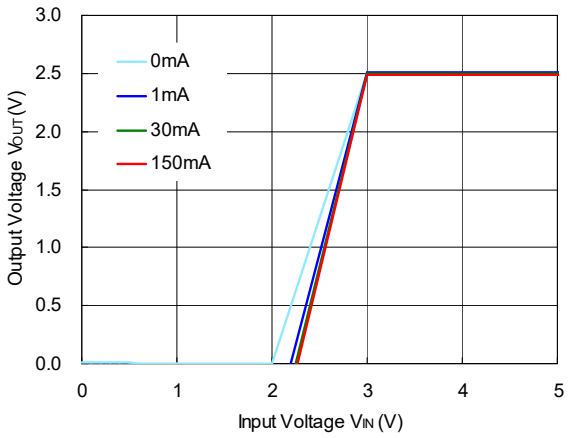


**R1518x33xx**

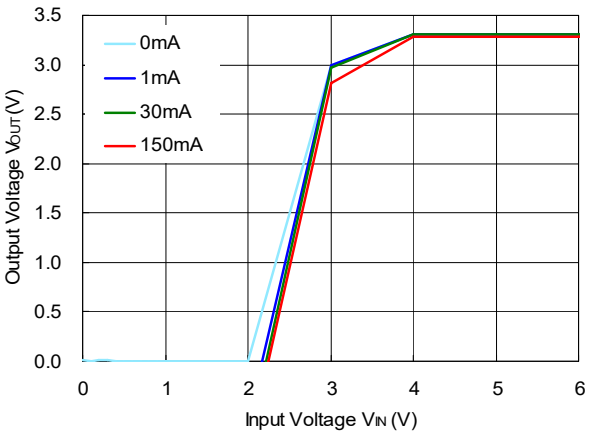

**R1518x50xx**

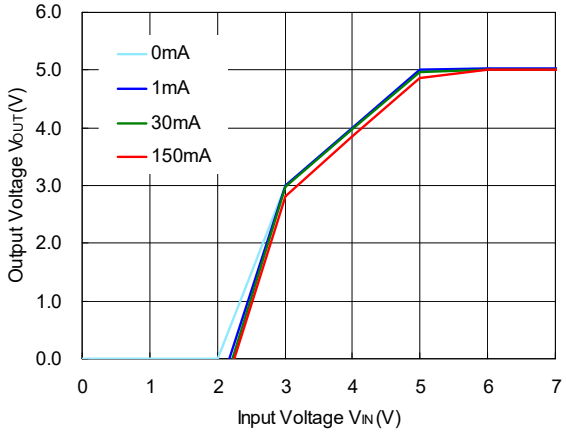


**R1518x85xx**

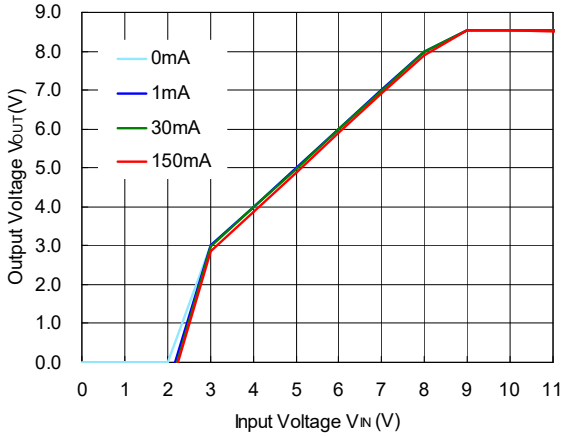


### 3) Supply Current vs. Input Voltage （ $I_{OUT}$ = 0 mA ）

**R1518x25xx, R1518x001C**

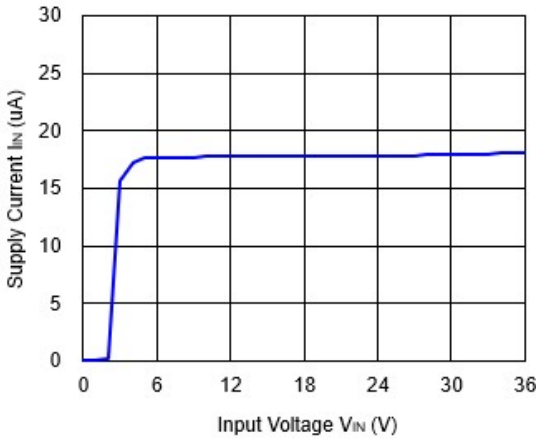


**R1518x33xx**

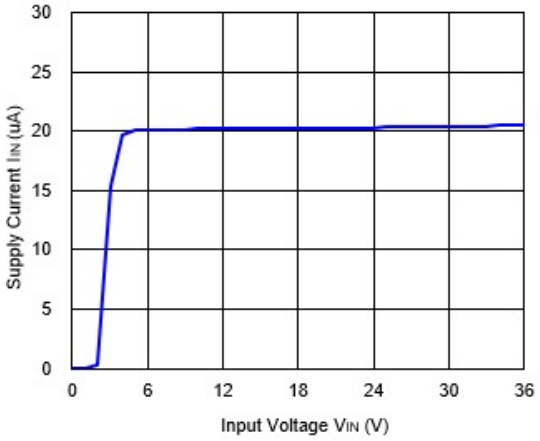


**R1518x50xx**

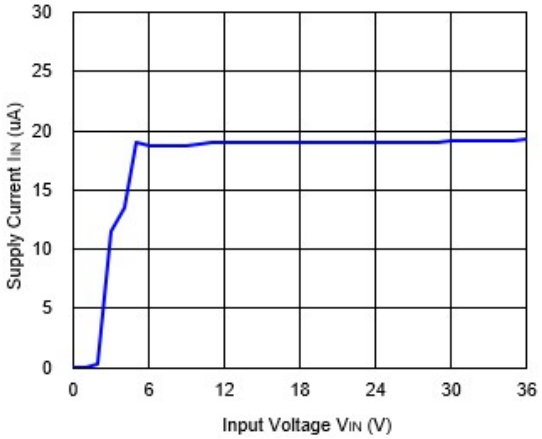


**R1518x85xx**

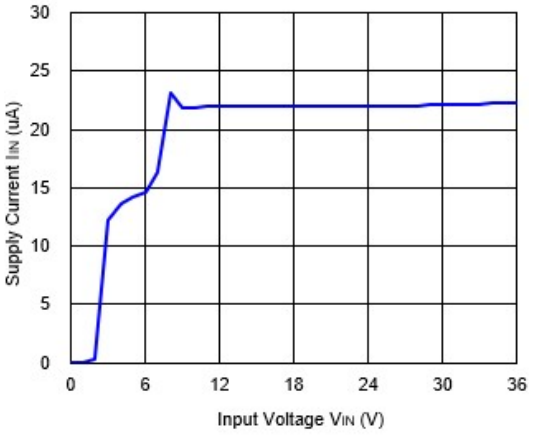

### 4) Output Voltage vs. Operating Temperature

**R1518x25xx, R1518x001C**

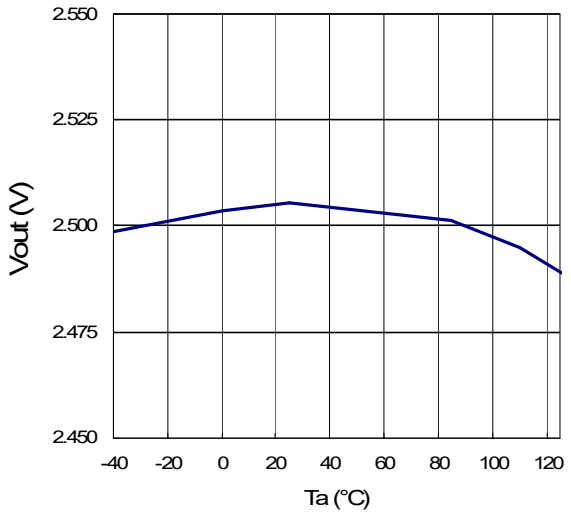


**R1518x33xx**

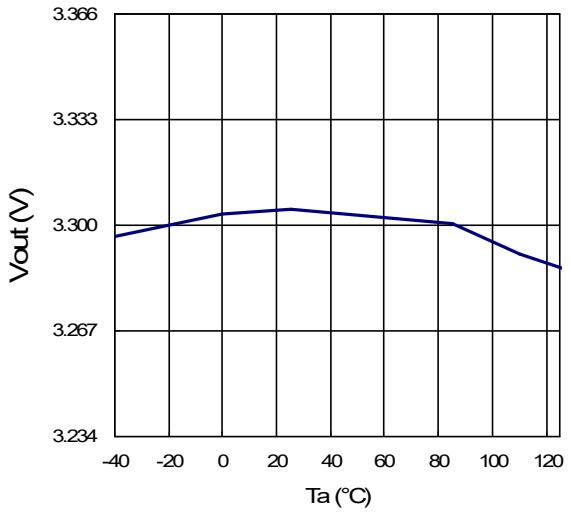


**R1518x50xx**

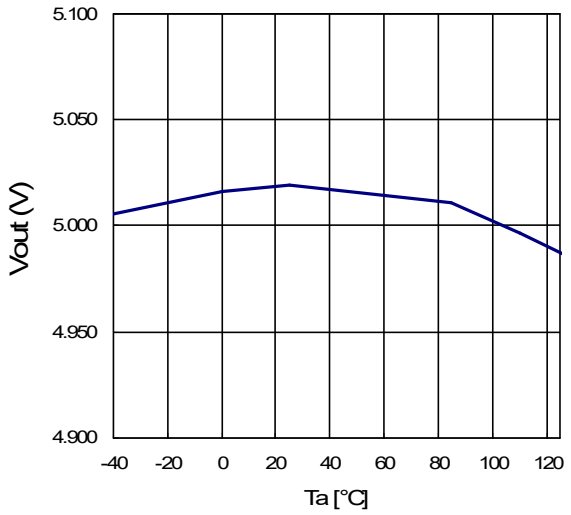


**R1518x85xx**

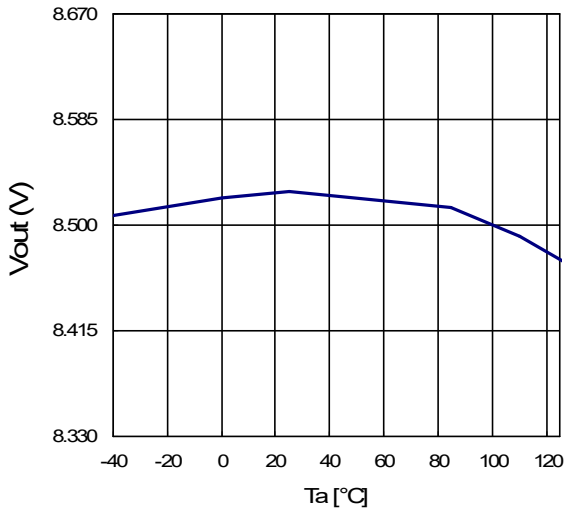


### 5) Dropout Voltage vs. Output Current

**R1518x25xx, R1518x001C**

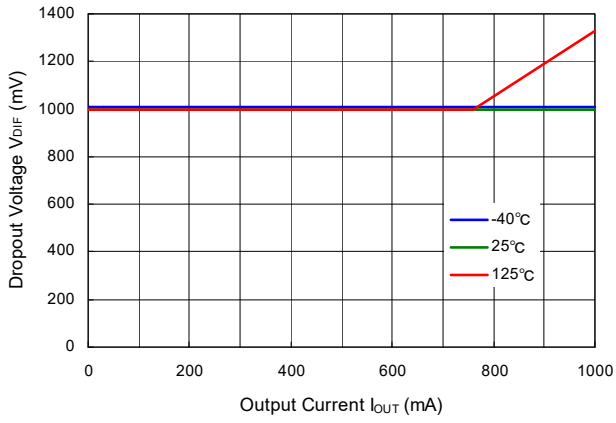


**R1518x33xx**

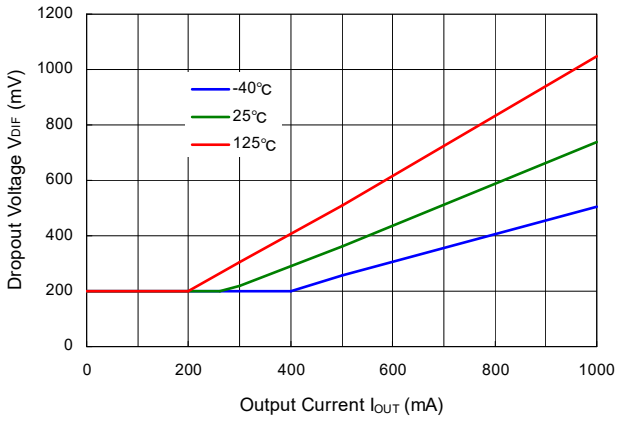

**R1518x50xx**

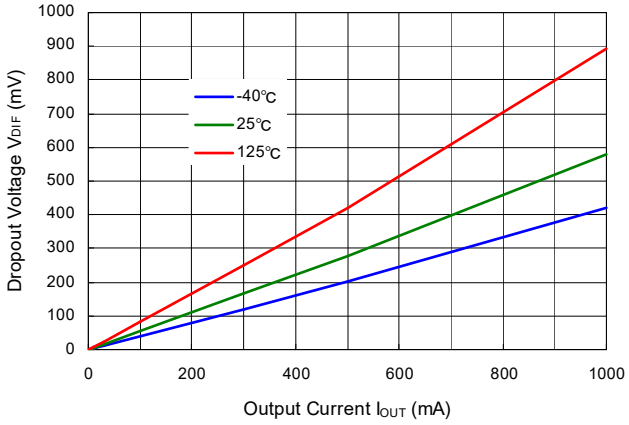


**R1518x85xx**

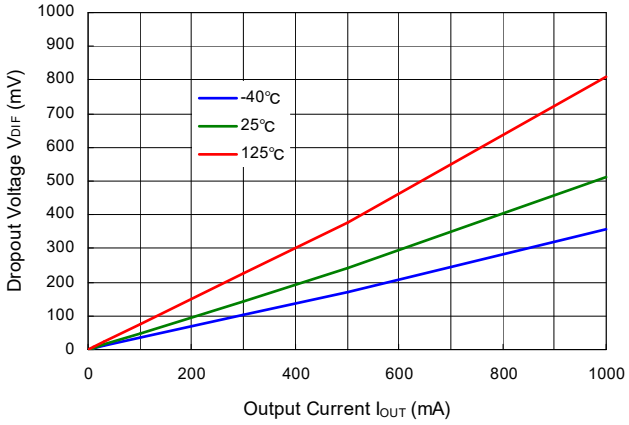


**6) Ripple Rejection vs. Input Voltage (Ta = 25°C, Ripple = 0.2 Vpp)**

**R1518x25xx, R1518x001C ($I_{OUT}$ = 1 mA)**

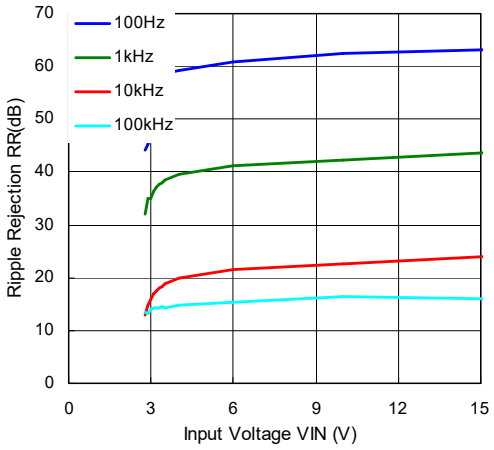


**R1518x25xx, R1518x001C ($I_{OUT}$ = 300 mA)**

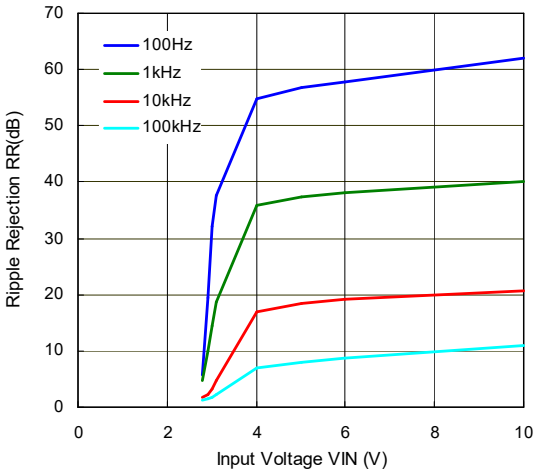


**R1518x33xx ($I_{OUT}$ = 1 mA)**

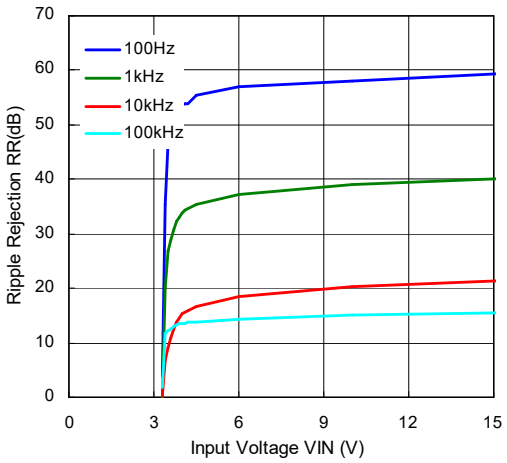


**R1518x33xx ($I_{OUT}$ = 300 mA)**

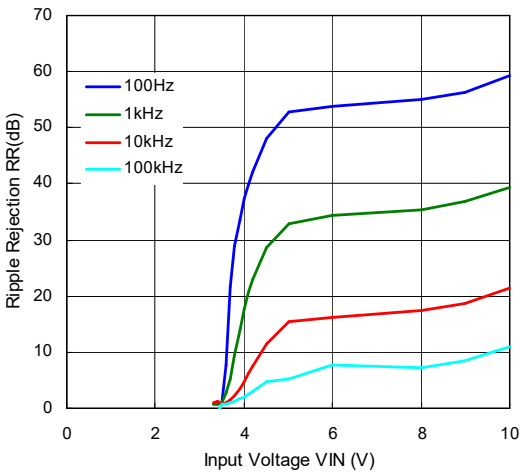

**R1518x50xx ($I_{OUT}$ = 1 mA)**

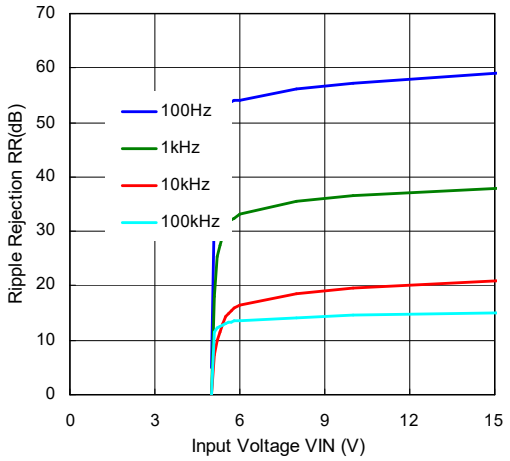


**R1518x50xx ($I_{OUT}$ = 300 mA)**

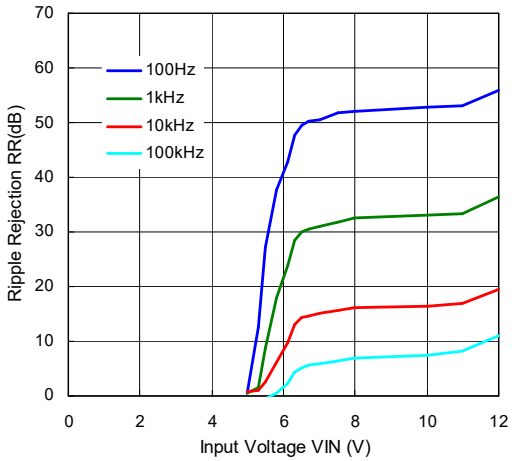


**R1518x85xx ($I_{OUT}$ = 1 mA)**

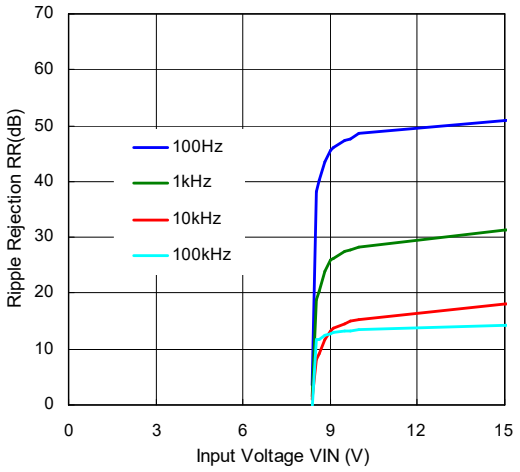


**R1518x85xx ($I_{OUT}$ = 300 mA)**

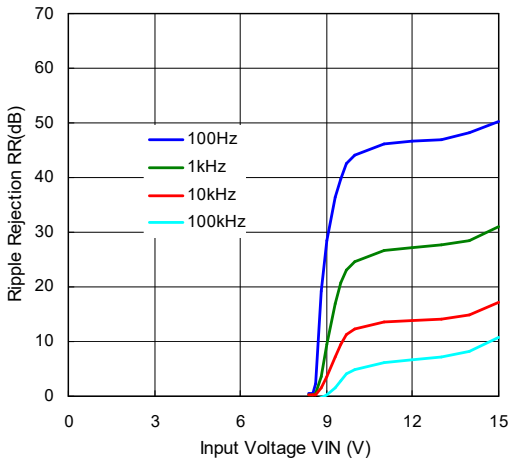


**7) Ripple Rejection vs. Frequency (Ta = 25°C, Ripple = 0.2 Vpp)**

**R1518x25xx, R1518x001C**

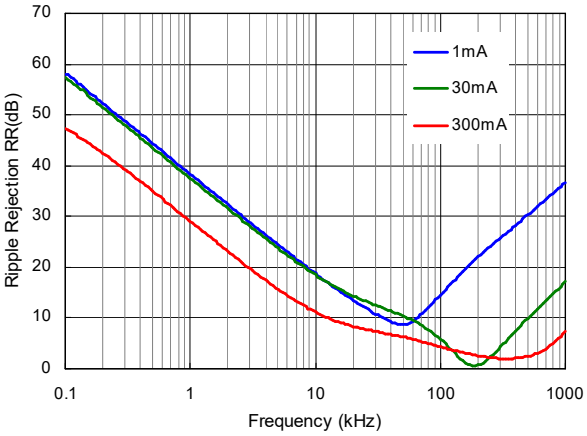


**R1518x33xx**

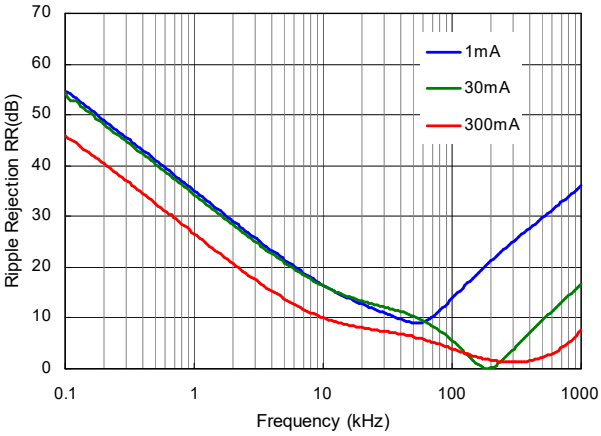

**R1518x50xx**

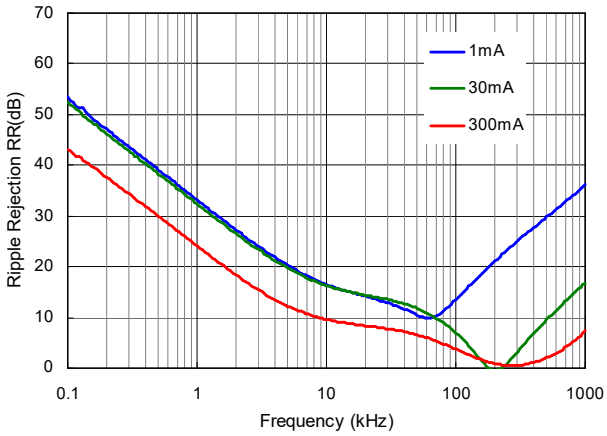


**R1518x85xx**

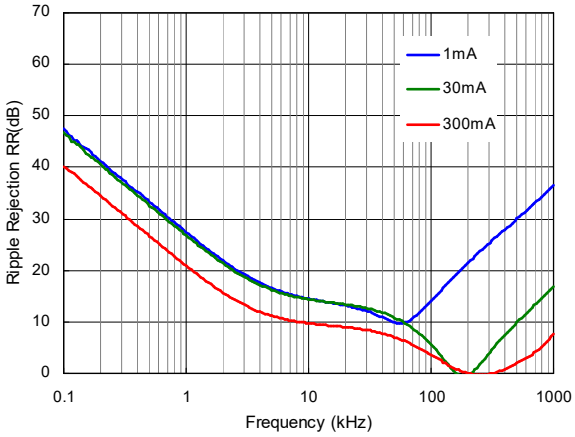


**8) Input Transient Response (Ta = 25°C, $I_{OUT}$ = 1 mA, tr = tf = 5 µs)**

**R1518x25xx, R1518x001C (C2 = 0.1 µF)**

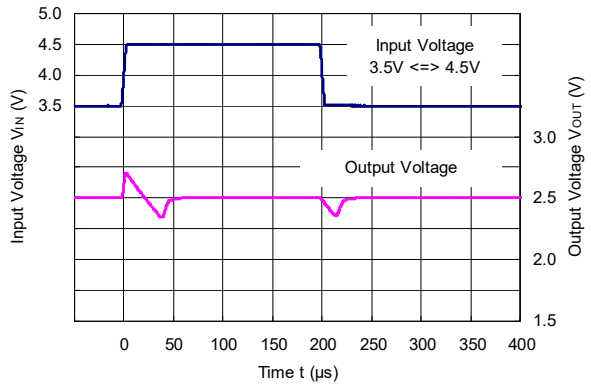


**R1518x25xx, R1518x001C (C2 = 10 µF)**

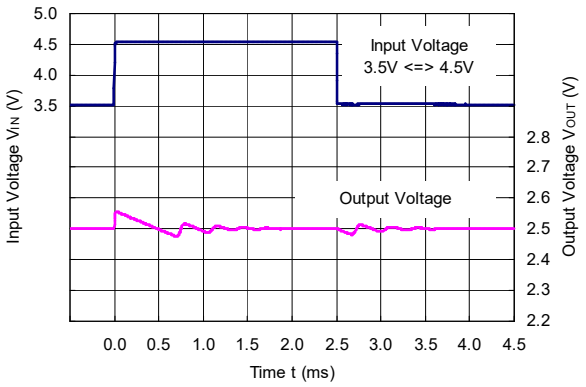


**R1518x33xx (C2 = 0.1 µF)**

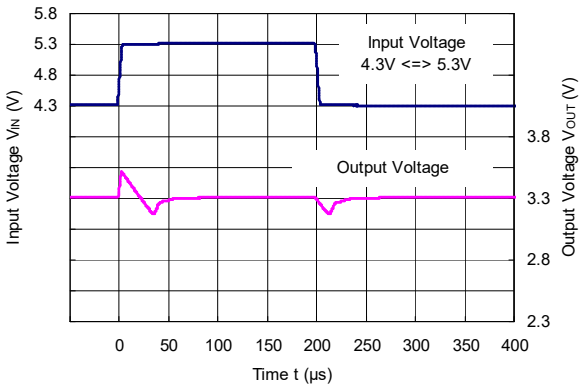


**R1518x33xx (C2 = 10 µF)**

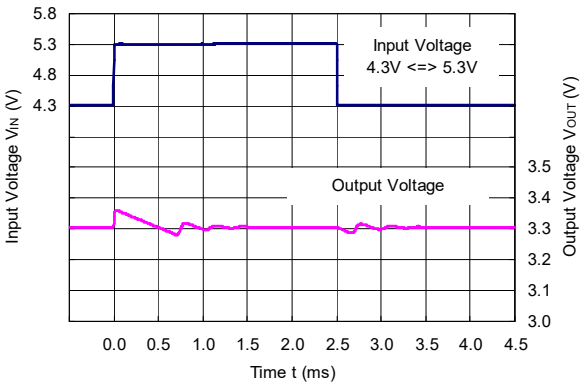

**R1518x50xx (C2 = 0.1 µF)**

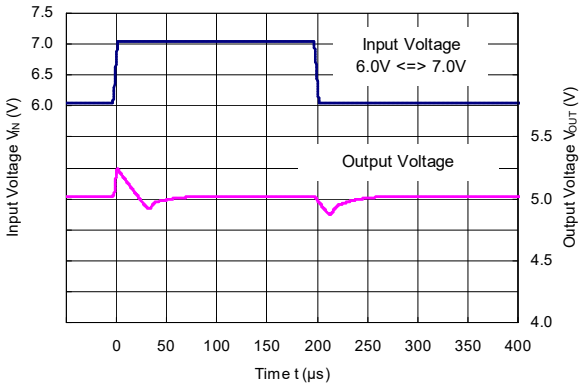


**R1518x50xx (C2 = 10 µF)**

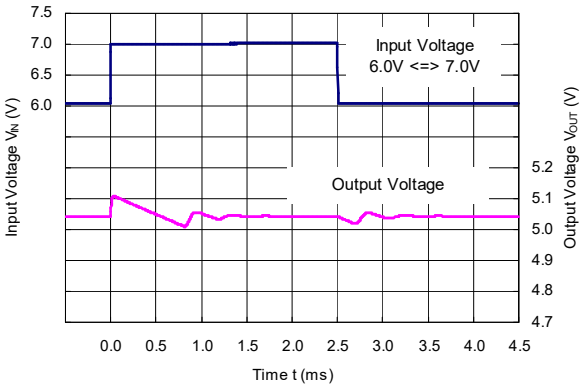


**R1518x85xx (C2 = 0.1 µF)**

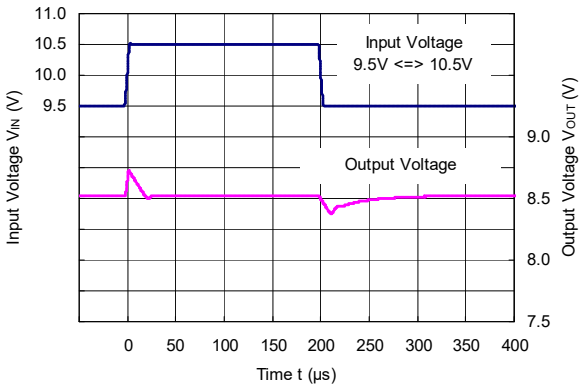


**R1518x85xx (C2 = 10 µF)**

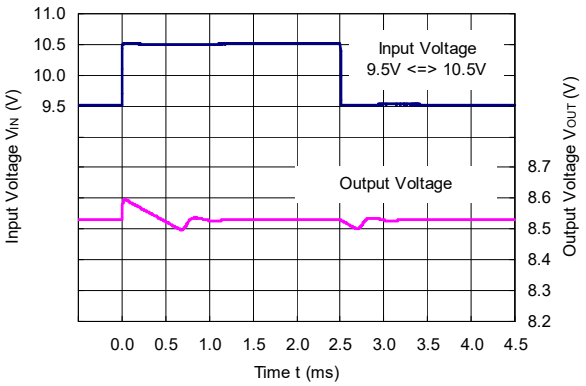


**9) Load Transient Response (Ta = 25°C, $V_{IN}$ = $V_{OUT}$ + 1.0 V, tr = tf = 0.5 µs)**

**R1518x25xx, R1518x001C (C2 = 0.1 µF)**

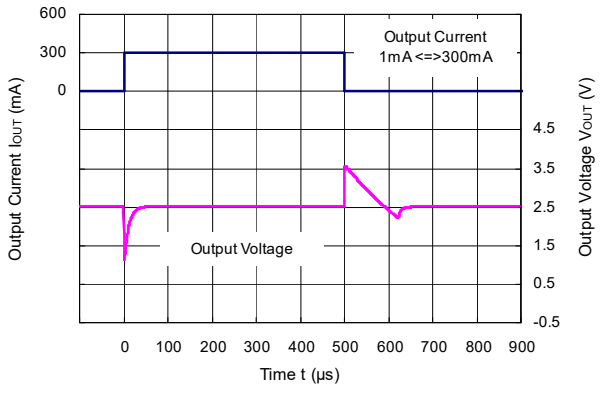


**R1518x25xx, R1518x001C (C2 = 10 µF)**

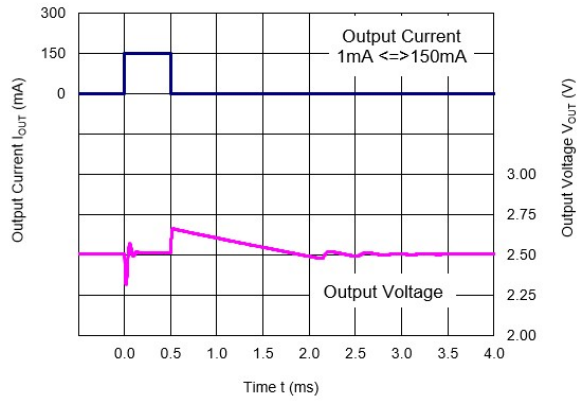

### R1518x33xx (C2 = 0.1 µF)

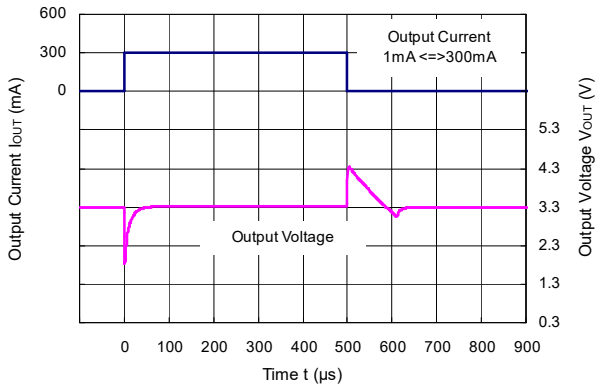


### R1518x33xx (C2 = 10 µF)

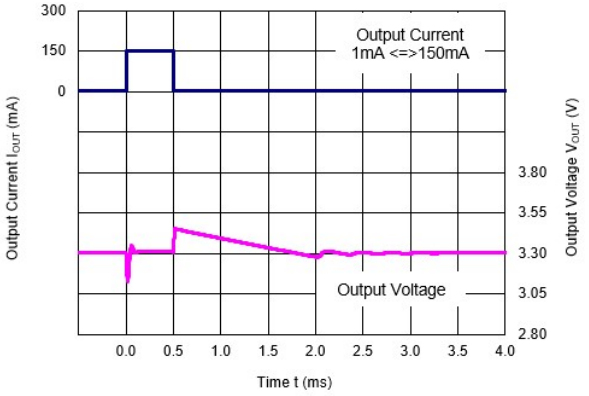


### R1518x50xx (C2 = 0.1 µF)

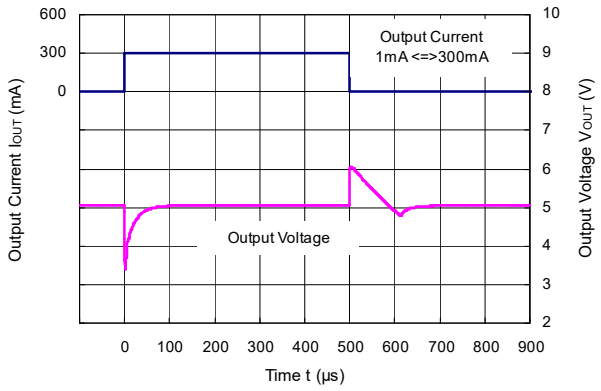


### R1518x50xx (C2 = 10 µF)

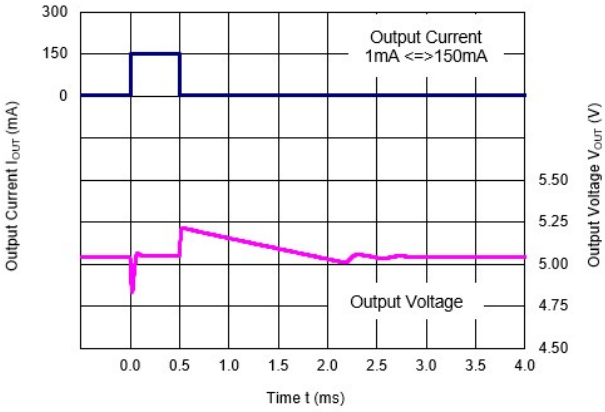


### R1518x85xx (C2 = 0.1 µF)

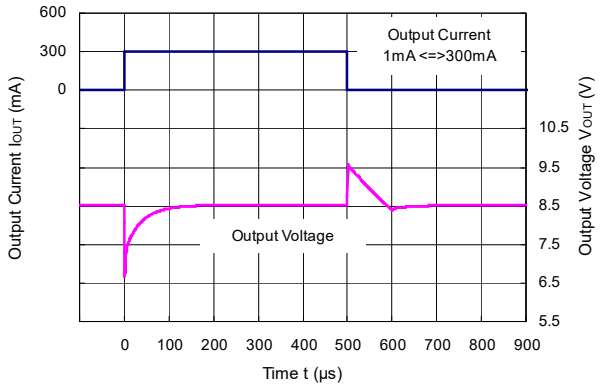


### R1518x85xx (C2 = 10 µF)

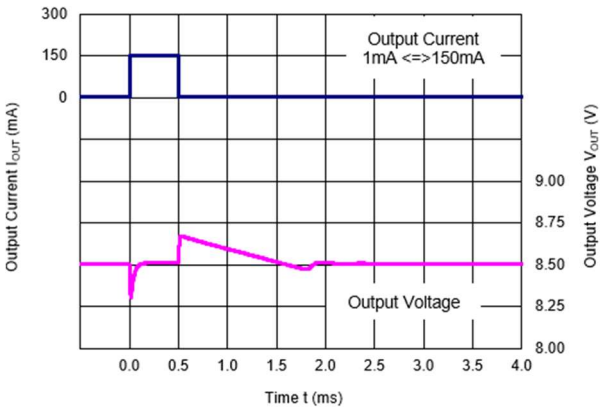

### 10) CE Transient Response (Ta = 25°C)

**R1518x25xB/D, R1518x001C (C2 = 0.1 µF)**

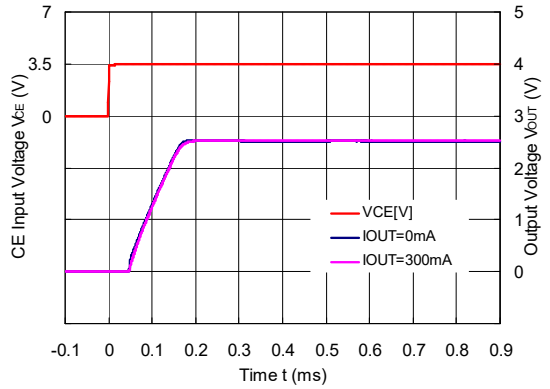


**R1518x25xD (C2 = 0.1 µF)**

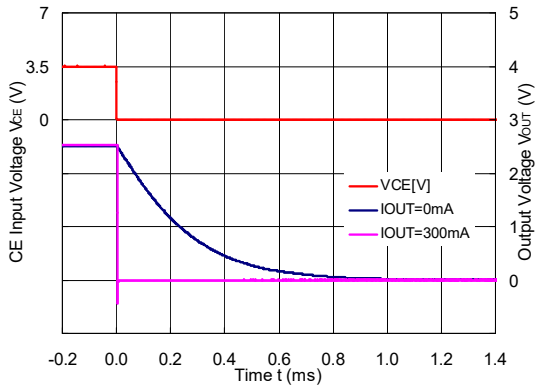


**R1518x33xB/D (C2 = 0.1 µF)**

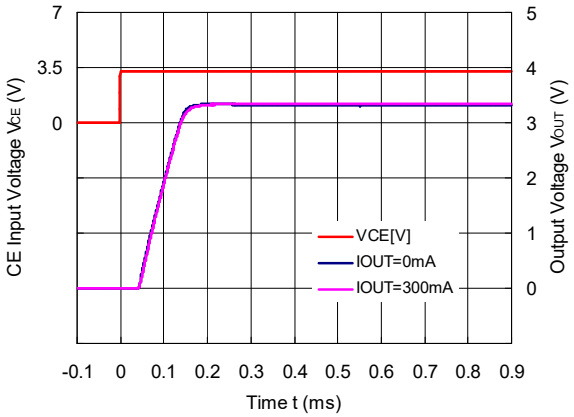


**R1518x33xD (C2 = 0.1 µF)**

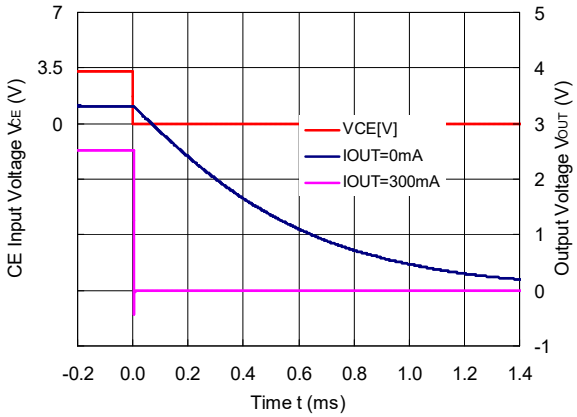


**R1518x50xB/D (C2 = 0.1 µF)**

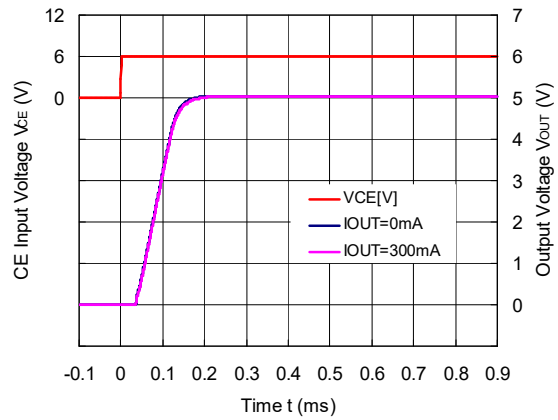


**R1518x50xD (C2 = 0.1 µF)**

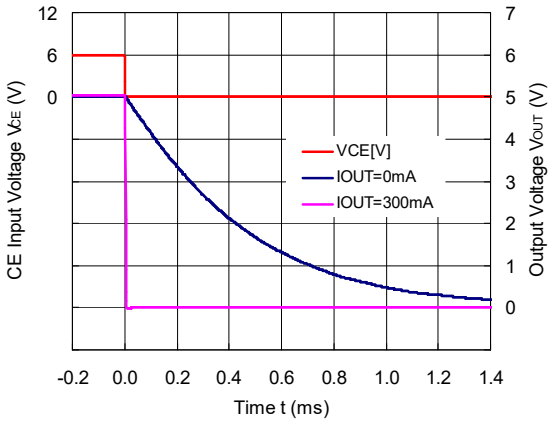

### R1518x85xB/D (C2 = 0.1 µF)

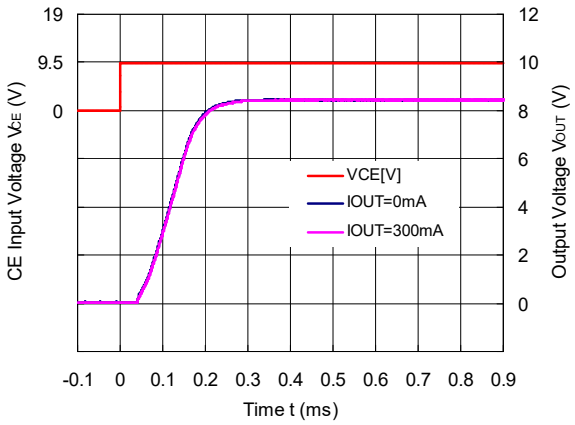


### R1518x85xD (C2 = 0.1 µF)

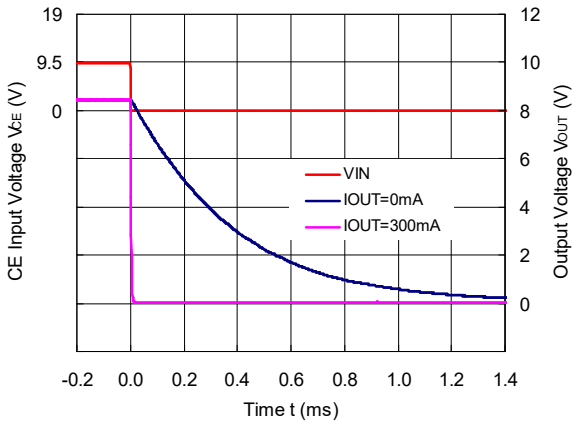


### R1518J251E/F (C2 = 0.1 µF, $C_D$ = 1 nF)

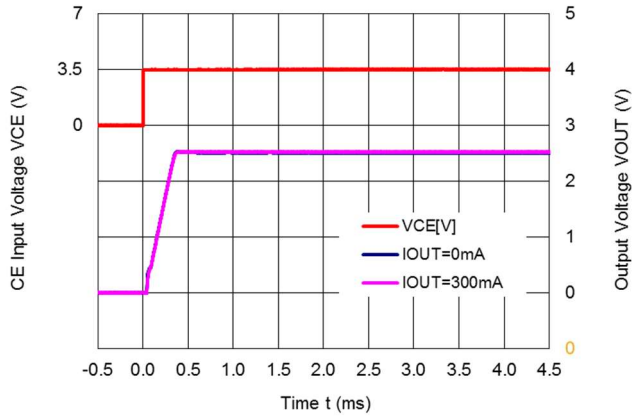


### R1518x25xF (C2 = 0.1 µF, $C_D$ = 1 nF)

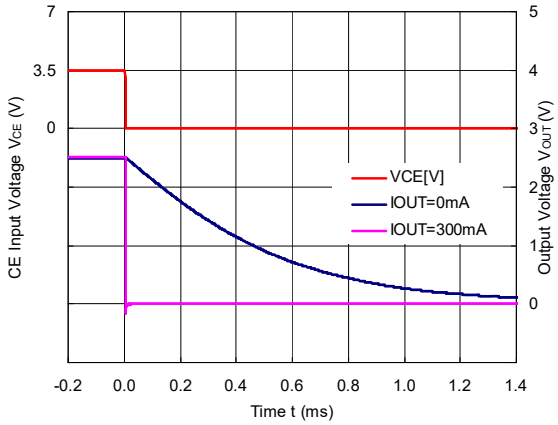


### R1518J331E/F (C2 = 0.1 µF, $C_D$ = 1 nF)

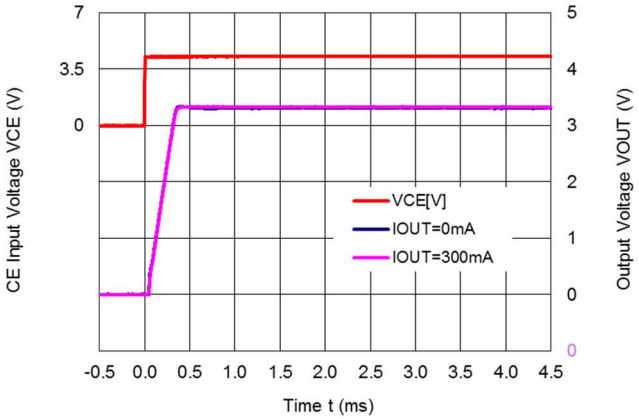


### R1518x33xF (C2 = 0.1 µF, $C_D$ = 1 nF)

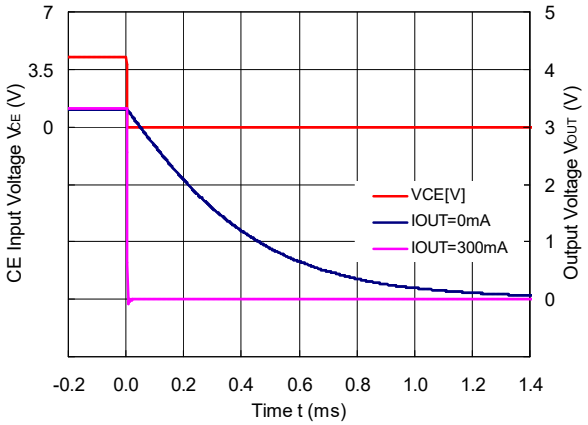

**R1518J501E/F (C2 = 0.1 µF, $C_D$ = 1 nF)**

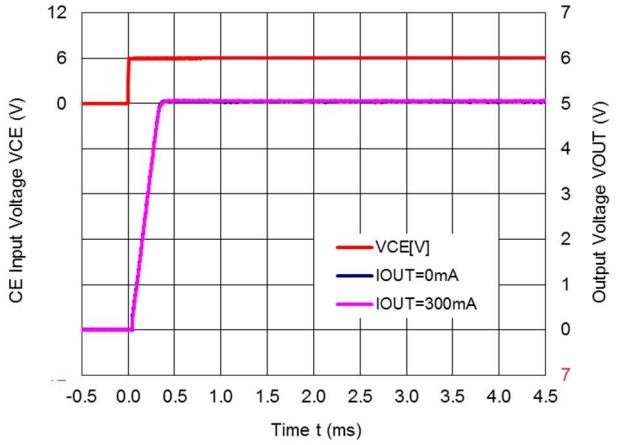


**R1518x50xF (C2 = 0.1 µF, $C_D$ = 1 nF)**

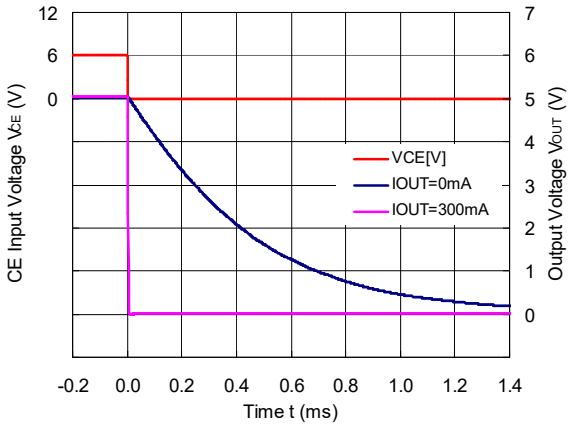


**R1518J851E/F (C2 = 0.1 µF, $C_D$ = 1 nF)**

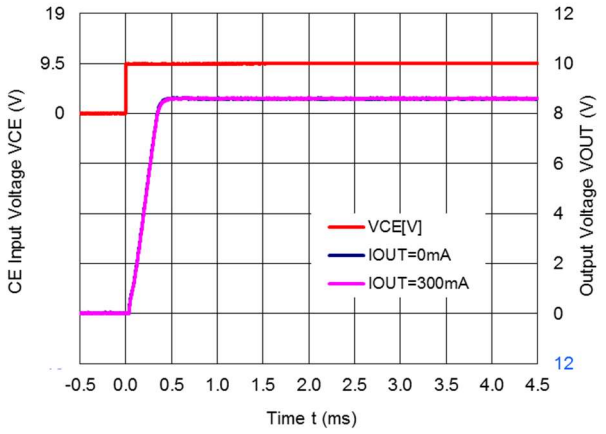


**R1518x85xF (C2 = 0.1 µF, CD = 1 nF)**

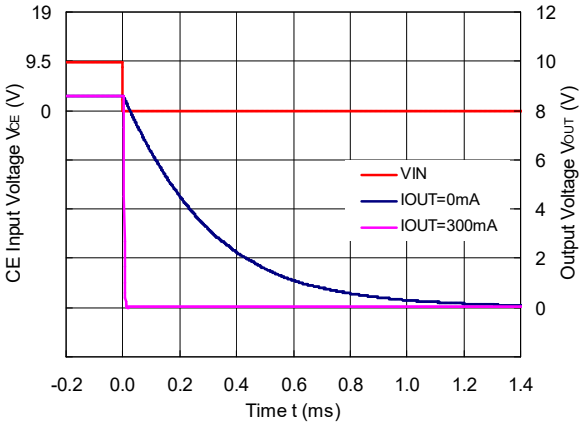

### 11) Inrush Current Prevention Circuit (Ta = 25°C, $I_{OUT}$ = 1 mA)

**R1518x25xB/D, R1518x001C**

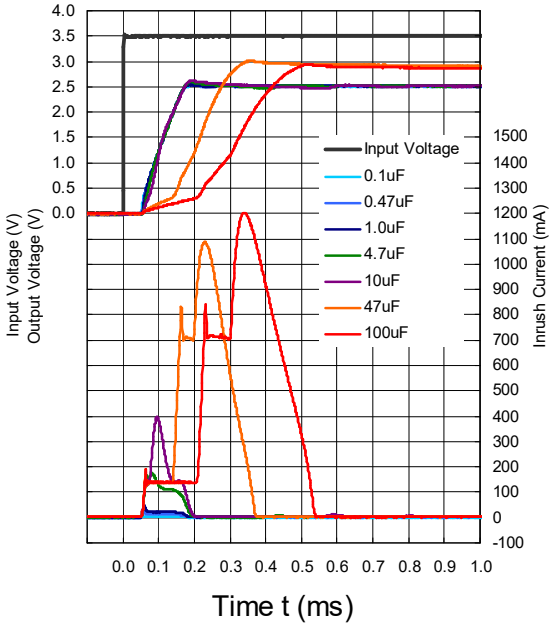


**R1518x33xB/D**

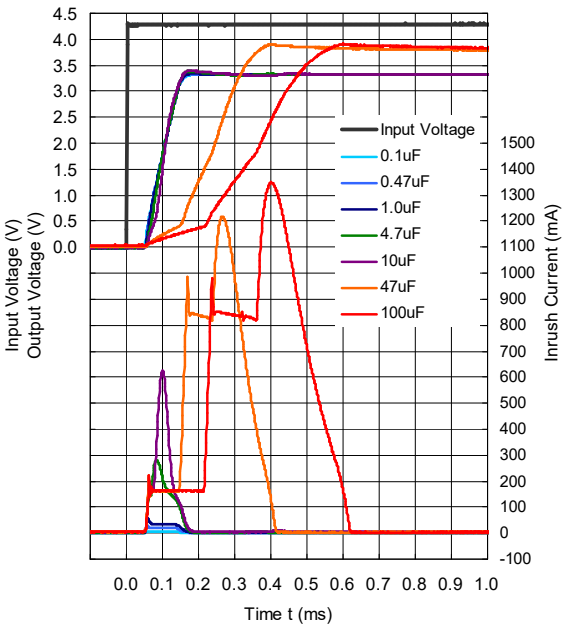


**R1518x50xB/D**

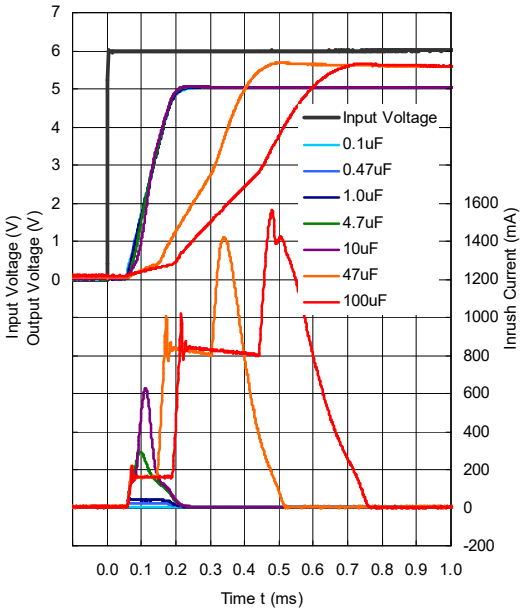


**R1518x85xB/D**

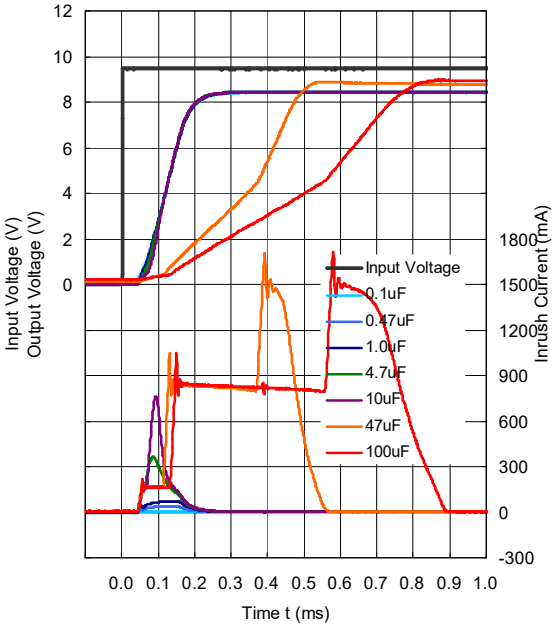

**R1518J251E/F ($C_D$ = 10 nF)**

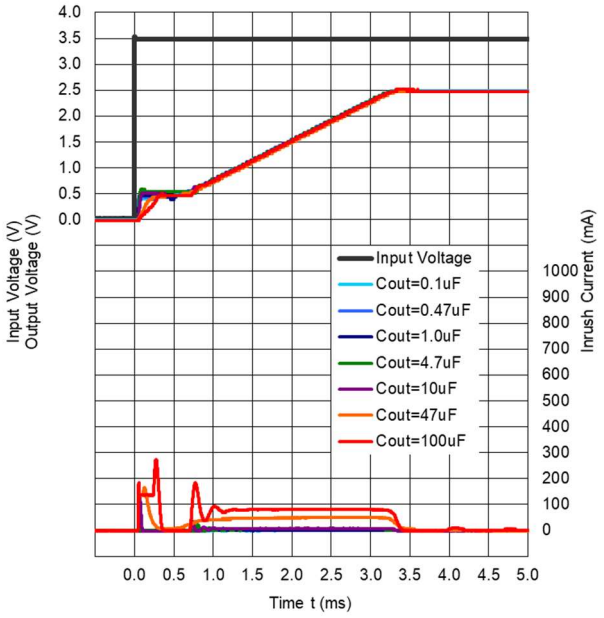


**R1518J331E/F ($C_D$ = 10 nF)**

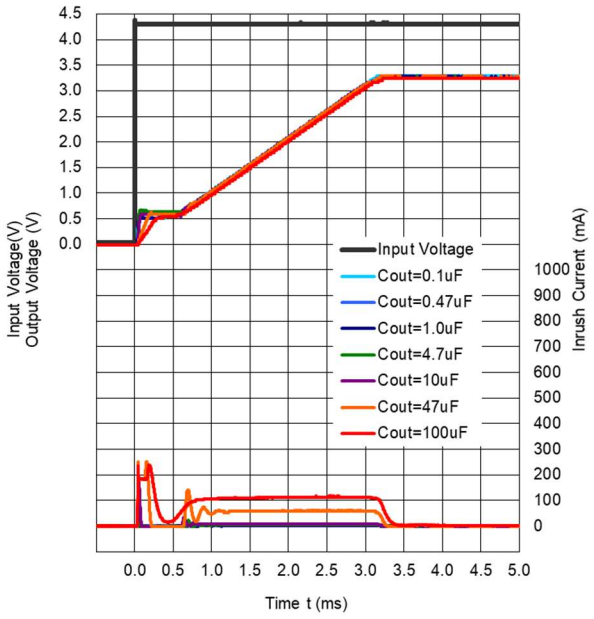


**R1518J501E/F ($C_D$ = 10 nF)**

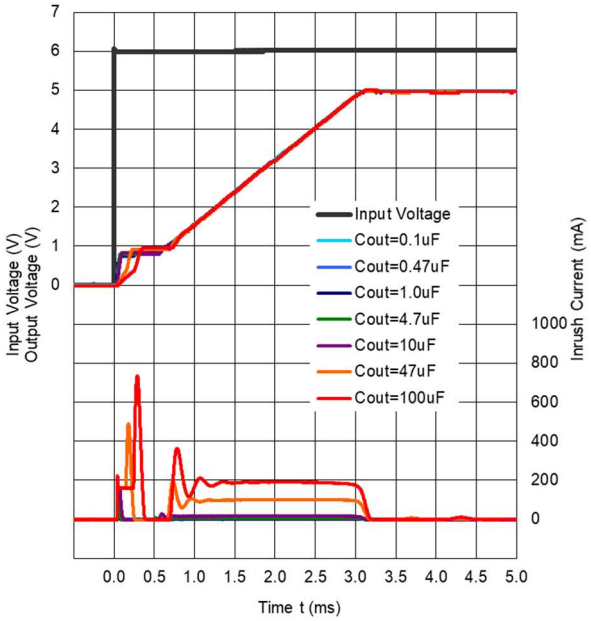


**R1518J851E/F ($C_D$ = 10 nF)**

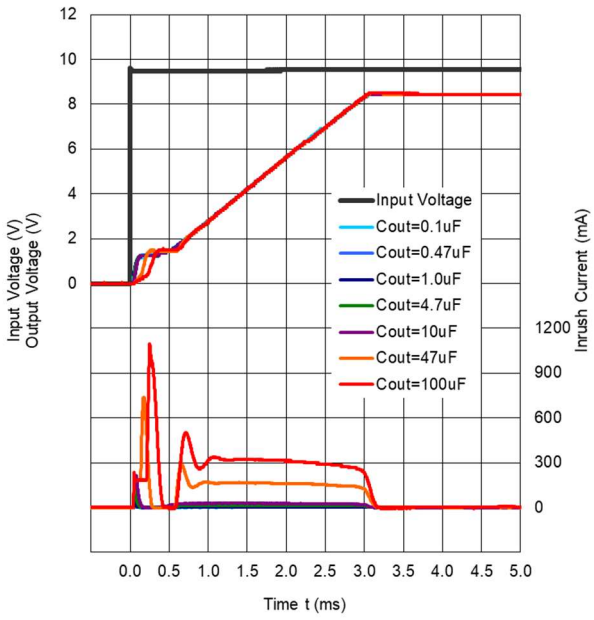

### Load Transient vs. Output Capacity (C2)

R1518 performs a stable operation by using 0.1 µF of ceramic capacitor as the output capacitor. However, the variation of output voltage may not meet the demand of the system when input voltage and load current vary. In such cases, the variation of output voltage can be minimized significantly by using 10 µF or higher ceramic capacitor. When using a high-capacity electrolytic capacitor for the output line, place the electrolytic capacitor a few centimeters apart from the IC after arranging the ceramic capacitor close to the IC.

Load Transient Response

**R1518x25xx**

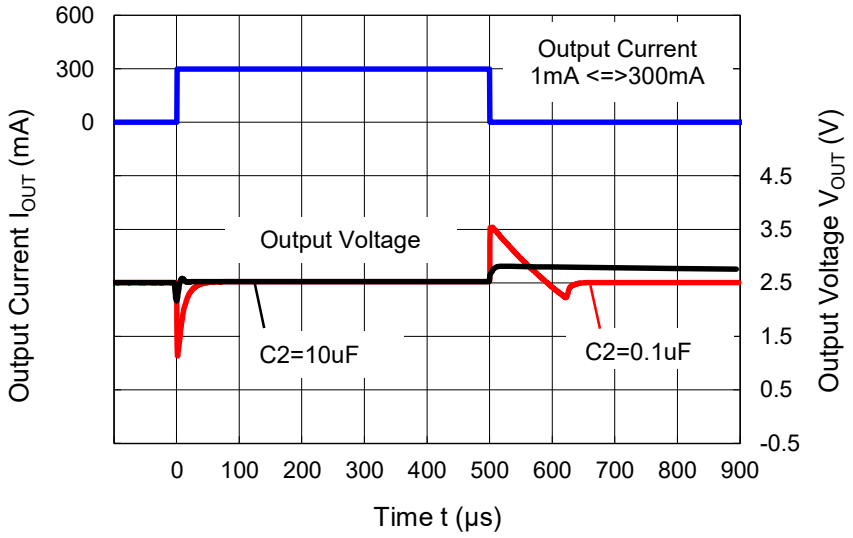

## ESR vs. Output Current

It is recommended that a ceramic type capacitor be used for this device. However, other types of capacitors having lower ESR can also be used. The relation between the output current ($I_{OUT}$) and the ESR of output capacitor is shown below.

**R1518xxxxB/D Test Circuit**

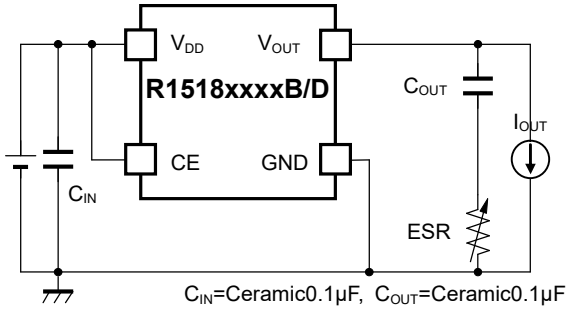


**R1518x001C Test Circuit**

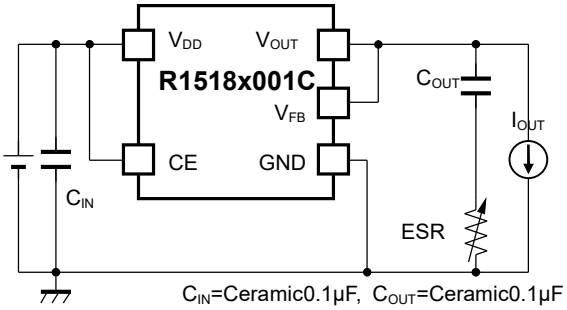


**R1518Jxx1E/F Test Circuit**

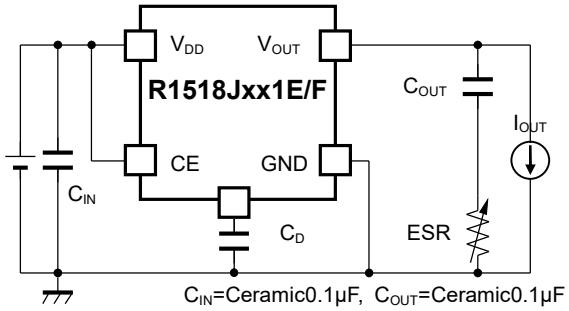


**Measurement conditions**

Frequency Band: 10 Hz to 2 MHz
Measurement Temperature: −40°C to 125°C
Hatched area: Noise level is 40 μV (average) or below
Capacitor: C1 = Ceramic 0.1 μF, C2 = 0.1 μF

**R1518x25xx Output Current $I_{OUT}$ vs. ESR**

Vin=2.5V to 36V

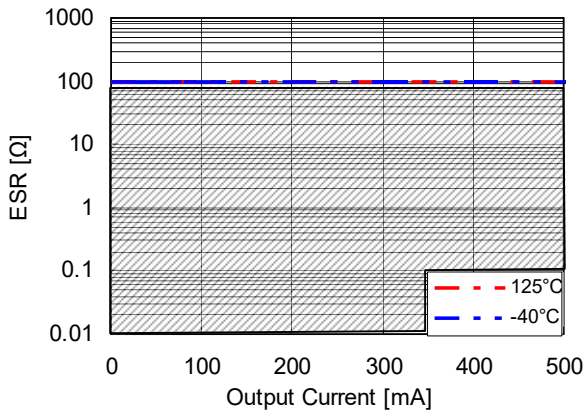


**R1518x85xx Output Current $I_{OUT}$ vs. ESR**

Vin=8.5V to 36V

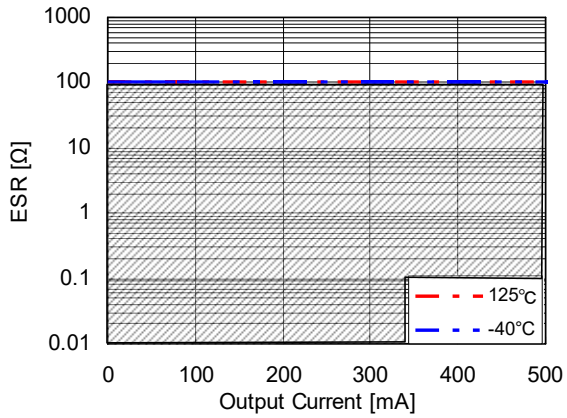

PD-HSOP-6J-(125150)-JE-A

The power dissipation of the package is dependent on PCB material, layout, and environmental conditions. The following measurement conditions are based on JEDEC STD. 51-7.

**Measurement Conditions**

| Item | Measurement Conditions |
|---|---|
| Environment | Mounting on Board (Wind Velocity = 0 m/s) |
| Board Material | Glass Cloth Epoxy Plastic (Four-Layer Board) |
| Board Dimensions | 76.2 mm × 114.3 mm × 0.8 mm |
| Copper Ratio | Outer Layer (First Layer): Less than 95% of 50 mm Square<br>Inner Layers (Second and Third Layers): Approx. 100% of 50 mm Square<br>Outer Layer (Fourth Layer): Approx. 100% of 50 mm Square |
| Through-holes | $\phi$ 0.3 mm × 28 pcs |

**Measurement Result** (Ta = 25°C, Tjmax = 150°C)

| Item | Measurement Result |
|---|---|
| Power Dissipation | 3400 mW |
| Thermal Resistance ($\theta$ja) | $\theta$ja = 37°C/W |
| Thermal Characterization Parameter ($\psi$jt) | $\psi$jt = 7°C/W |

$\theta$ja: Junction-to-Ambient Thermal Resistance

$\psi$jt: Junction-to-Top Thermal Characterization Parameter

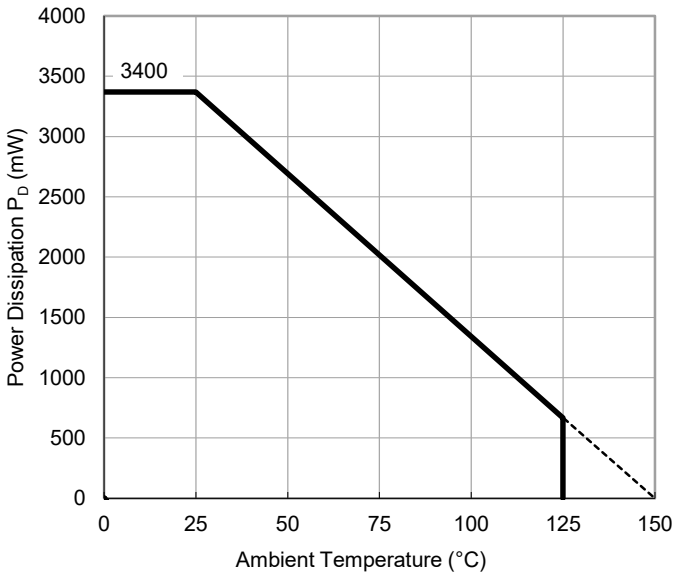


**Power Dissipation vs. Ambient Temperature**

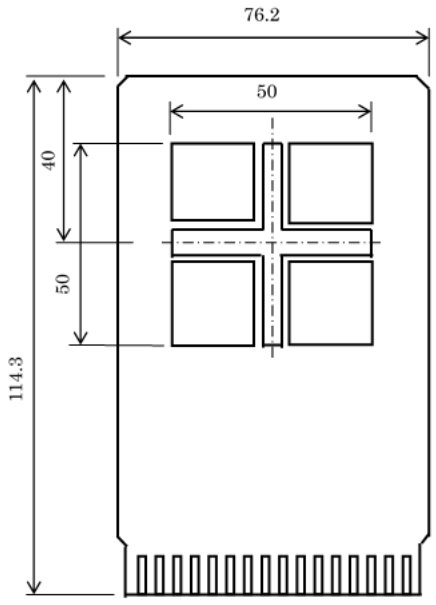


**Measurement Board Pattern**

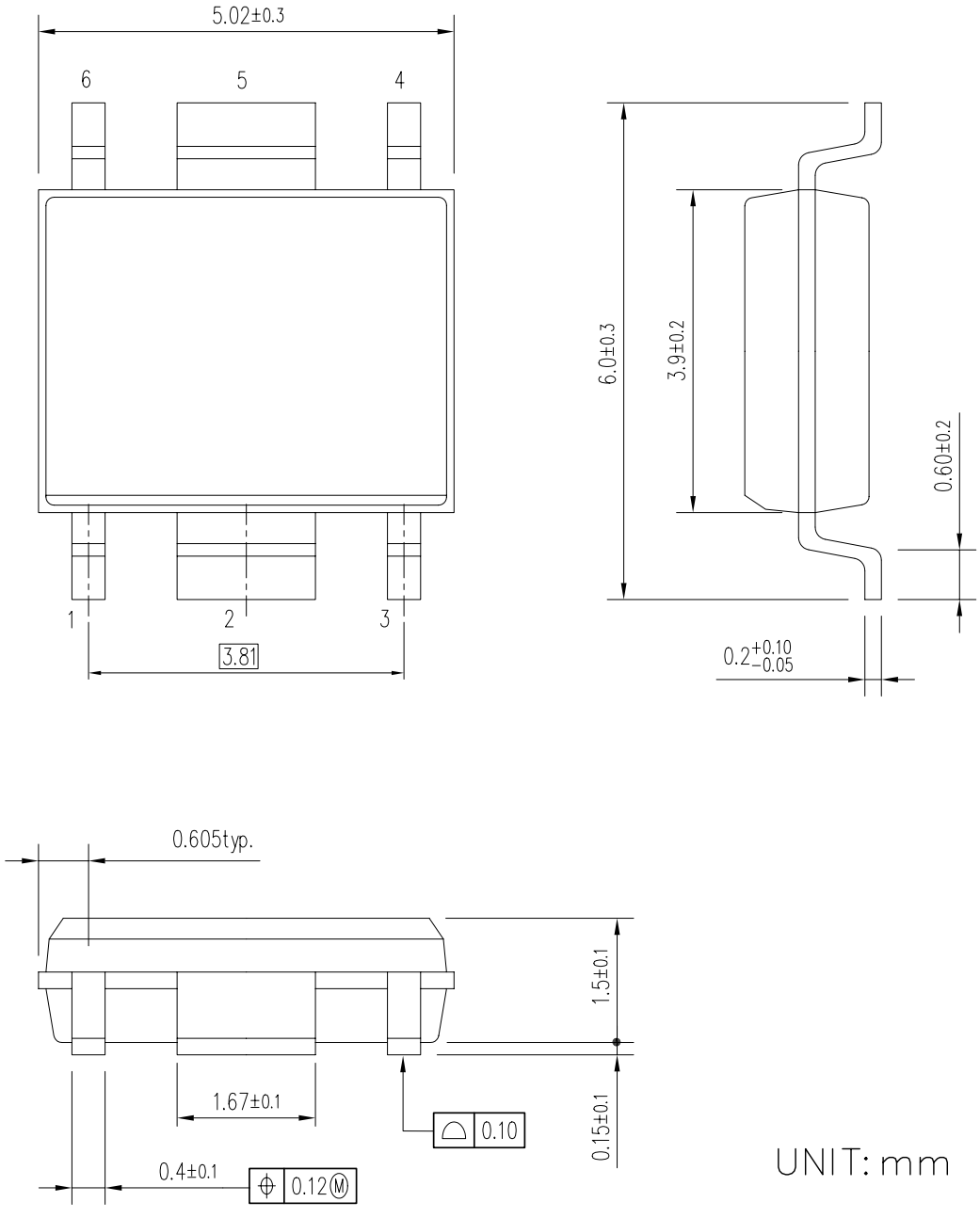


**HSOP-6J Package Dimensions**

MK-R1518S-JCEC-B

①②③④: Product Code … **Refer to "*R1518S MARK SPECIFICATION TABLE (HSOP-6J)*"**

⑤⑥: Lot Number … Alphanumeric Serial Number

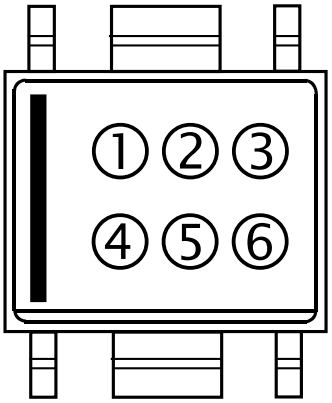


**HSOP-6J Part Markings**

| NOTICE |
| --- |
| There can be variation in the marking when different AOI (Automated Optical Inspection) equipment is used. In the case of recognizing the marking characteristic with AOI, please contact our sales or our distributor before attempting to use AOI. |

MK-R1518S-JCEC-B

**R1518S MARK SPECIFICATION TABLE (HSOP-6J)**

**R1518Sxx2B**

| Product Name | ①②③④ | $V_{SET}$ |
|---|---|---|
| R1518S252B | **W 6 2 5** | 2.5 V |
| R1518S282B | **W 6 2 8** | 2.8 V |
| R1518S302B | **W 6 3 0** | 3.0 V |
| R1518S332B | **W 6 3 3** | 3.3 V |
| R1518S342B | **W 6 3 4** | 3.4 V |
| R1518S502B | **W 6 5 0** | 5.0 V |
| R1518S602B | **W 6 6 0** | 6.0 V |
| R1518S802B | **W 6 8 0** | 8.0 V |
| R1518S852B | **W 6 8 5** | 8.5 V |
| R1518S902B | **W 6 9 0** | 9.0 V |

**R1518Sxx2D**

| Product Name | ①②③④ | $V_{SET}$ |
|---|---|---|
| R1518S252D | **W 7 2 5** | 2.5 V |
| R1518S282D | **W 7 2 8** | 2.8 V |
| R1518S302D | **W 7 3 0** | 3.0 V |
| R1518S332D | **W 7 3 3** | 3.3 V |
| R1518S342D | **W 7 3 4** | 3.4 V |
| R1518S502D | **W 7 5 0** | 5.0 V |
| R1518S602D | **W 7 6 0** | 6.0 V |
| R1518S802D | **W 7 8 0** | 8.0 V |
| R1518S852D | **W 7 8 5** | 8.5 V |
| R1518S902D | **W 7 9 0** | 9.0 V |

**R1518S001C (Adjustable Output Voltage Setting Type)**

| Product Name | ①②③④ | $V_{SET}$ |
|---|---|---|
| R1518S001C | **W 2 0 1** | - |

PD-TO-252-5-P2-(125150)-JE-B

The power dissipation of the package is dependent on PCB material, layout, and environmental conditions. The following measurement conditions are based on JEDEC STD. 51.

**Measurement Conditions**

| Item | Measurement Conditions |
|---|---|
| Environment | Mounting on Board (Wind Velocity = 0 m/s) |
| Board Material | Glass Cloth Epoxy Plastic (Four-Layer Board) |
| Board Dimensions | 76.2 mm × 114.3 mm × 0.8 mm |
| Copper Ratio | Outer Layer (First Layer): Less than 95% of 50 mm Square<br>Inner Layers (Second and Third Layers): Approx. 100% of 50 mm Square<br>Outer Layer (Fourth Layer): Approx. 100% of 50 mm Square |
| Through-holes | ϕ 0.4 mm × 30 pcs |

**Measurement Result** (Ta = 25°C, Tjmax = 150°C)

| Item | Measurement Result |
|---|---|
| Power Dissipation | 4800 mW |
| Thermal Resistance (θja) | θja = 26°C/W |
| Thermal Characterization Parameter (ψjt) | ψjt = 7°C/W |

θja: Junction-to-Ambient Thermal Resistance

ψjt: Junction-to-Top Thermal Characterization Parameter

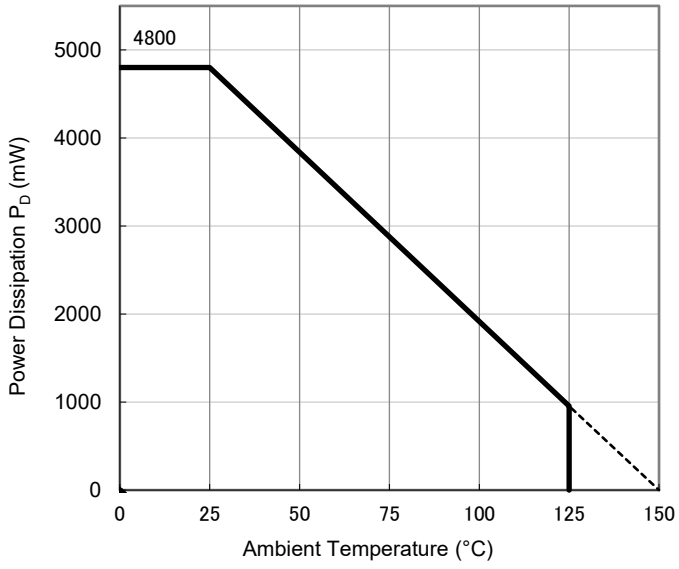


**Power Dissipation vs. Ambient Temperature**

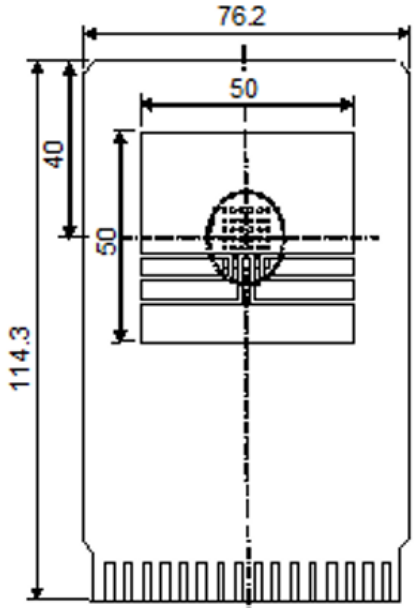


**Measurement Board Pattern**

DM-TO-252-5-P2-JE-C

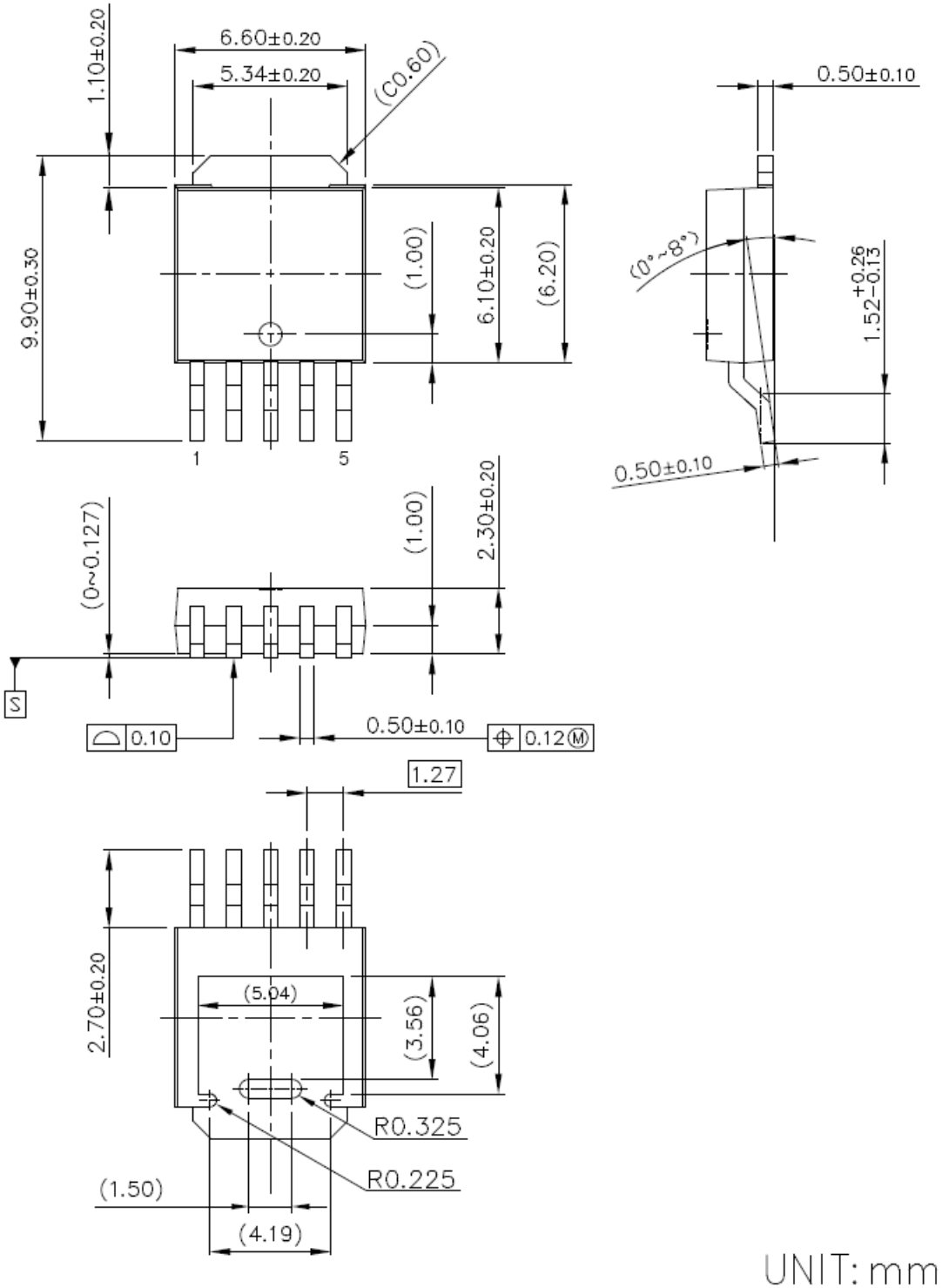


UNIT: mm

MK-R1518J-JCEC-B

①②③④⑤⑥⑦⑧: Product Code … Refer to “R1518J MARK SPECIFICATION TABLE (TO-252-5-P2)”
⑨⑩: Lot Number … Alphanumeric Serial Number

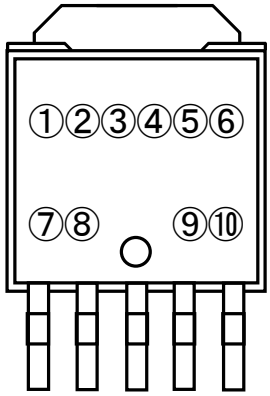


**TO-252-5-P2 Part Markings**

| NOTICE |
| --- |
| There can be variation in the marking when different AOI (Automated Optical Inspection) equipment is used. In the case of recognizing the marking characteristic with AOI, please contact our sales or our distributor before attempting to use AOI. |

MK-R1518J-JCEC-B

## R1518J MARK SPECIFICATION TABLE (TO-252-5-P2)

**Note: ⑧Underbar indicates a blank**

**R1518Jxx1B**

| Product Name | ①②③④⑤⑥⑦⑧ | $V_{SET}$ |
|---|---|---|
| R1518J251B | L 1 J 2 5 1 B _ | 2.5 V |
| R1518J281B | L 1 J 2 8 1 B _ | 2.8 V |
| R1518J301B | L 1 J 3 0 1 B _ | 3.0 V |
| R1518J331B | L 1 J 3 3 1 B _ | 3.3 V |
| R1518J341B | L 1 J 3 4 1 B _ | 3.4 V |
| R1518J501B | L 1 J 5 0 1 B _ | 5.0 V |
| R1518J601B | L 1 J 6 0 1 B _ | 6.0 V |
| R1518J801B | L 1 J 8 0 1 B _ | 8.0 V |
| R1518J851B | L 1 J 8 5 1 B _ | 8.5 V |
| R1518J901B | L 1 J 9 0 1 B _ | 9.0 V |

**R1518J001C (Adjustable Output Voltage Setting Type)**

| Product Name | ①②③④⑤⑥⑦⑧ | $V_{SET}$ |
|---|---|---|
| R1518J001C | L 2 J 0 0 1 C _ | - |

**R1518Jxx1D**

| Product Name | ①②③④⑤⑥⑦⑧ | $V_{SET}$ |
|---|---|---|
| R1518J251D | L 3 J 2 5 1 D _ | 2.5 V |
| R1518J281D | L 3 J 2 8 1 D _ | 2.8 V |
| R1518J301D | L 3 J 3 0 1 D _ | 3.0 V |
| R1518J331D | L 3 J 3 3 1 D _ | 3.3 V |
| R1518J341D | L 3 J 3 4 1 D _ | 3.4 V |
| R1518J501D | L 3 J 5 0 1 D _ | 5.0 V |
| R1518J601D | L 3 J 6 0 1 D _ | 6.0 V |
| R1518J801D | L 3 J 8 0 1 D _ | 8.0 V |
| R1518J851D | L 3 J 8 5 1 D _ | 8.5 V |
| R1518J901D | L 3 J 9 0 1 D _ | 9.0 V |

**R1518Jxx1E**

| Product Name | ①②③④⑤⑥⑦⑧ | $V_{SET}$ |
|---|---|---|
| R1518J251E | L 4 J 2 5 1 E _ | 2.5 V |
| R1518J281E | L 4 J 2 8 1 E _ | 2.8 V |
| R1518J301E | L 4 J 3 0 1 E _ | 3.0 V |
| R1518J331E | L 4 J 3 3 1 E _ | 3.3 V |
| R1518J341E | L 4 J 3 4 1 E _ | 3.4 V |
| R1518J501E | L 4 J 5 0 1 E _ | 5.0 V |
| R1518J601E | L 4 J 6 0 1 E _ | 6.0 V |
| R1518J801E | L 4 J 8 0 1 E _ | 8.0 V |
| R1518J851E | L 4 J 8 5 1 E _ | 8.5 V |
| R1518J901E | L 4 J 9 0 1 E _ | 9.0 V |

**R1518Jxx1F**

| Product Name | ①②③④⑤⑥⑦⑧ | $V_{SET}$ |
|---|---|---|
| R1518J251F | L 5 J 2 5 1 F _ | 2.5 V |
| R1518J281F | L 5 J 2 8 1 F _ | 2.8 V |
| R1518J301F | L 5 J 3 0 1 F _ | 3.0 V |
| R1518J331F | L 5 J 3 3 1 F _ | 3.3 V |
| R1518J341F | L 5 J 3 4 1 F _ | 3.4 V |
| R1518J501F | L 5 J 5 0 1 F _ | 5.0 V |
| R1518J601F | L 5 J 6 0 1 F _ | 6.0 V |
| R1518J801F | L 5 J 8 0 1 F _ | 8.0 V |
| R1518J851F | L 5 J 8 5 1 F _ | 8.5 V |
| R1518J901F | L 5 J 9 0 1 F _ | 9.0 V |

1. The products and the product specifications described in this document are subject to change or discontinuation of production without notice for reasons such as improvement. Therefore, before deciding to use the products, please refer to our sales representatives for the latest information thereon.
2. The materials in this document may not be copied or otherwise reproduced in whole or in part without the prior written consent of us.
3. This product and any technical information relating thereto are subject to complementary export controls (so-called KNOW controls) under the Foreign Exchange and Foreign Trade Law, and related politics ministerial ordinance of the law. (Note that the complementary export controls are inapplicable to any application-specific products, except rockets and pilotless aircraft, that are insusceptible to design or program changes.) Accordingly, when exporting or carrying abroad this product, follow the Foreign Exchange and Foreign Trade Control Law and its related regulations with respect to the complementary export controls.
4. The technical information described in this document shows typical characteristics and example application circuits for the products. The release of such information is not to be construed as a warranty of or a grant of license under our or any third party's intellectual property rights or any other rights.
5. The products listed in this document are intended and designed for automotive applications. Those customers intending to use a product in an application requiring extreme quality and reliability, for example, in a highly specific application where the failure or misoperation of the product could result in human injury or death should first contact us.
    - Aerospace Equipment
    - Equipment Used in the Deep Sea
    - Power Generator Control Equipment (nuclear, steam, hydraulic, etc.)
    - Life Maintenance Medical Equipment
    - Fire Alarms / Intruder Detectors
    - Vehicle Control Equipment (airplane, railroad, ship, etc.)
    - Various Safety Devices
    - Traffic control system
    - Combustion equipment

    In case your company desires to use this product for any applications other than general electronic equipment mentioned above, make sure to contact our company in advance. Note that the important requirements mentioned in this section are not applicable to cases where operation requirements such as application conditions are confirmed by our company in writing after consultation with your company.
6. We are making our continuous effort to improve the quality and reliability of our products, but semiconductor products are likely to fail with certain probability. In order to prevent any injury to persons or damages to property resulting from such failure, customers should be careful enough to incorporate safety measures in their design, such as redundancy feature, fire containment feature and fail-safe feature. We do not assume any liability or responsibility for any loss or damage arising from misuse or inappropriate use of the products.
7. The products have been designed and tested to function within controlled environmental conditions. Do not use products under conditions that deviate from methods or applications specified in this datasheet. Failure to employ the products in the proper applications can lead to deterioration, destruction or failure of the products. We shall not be responsible for any bodily injury, fires or accident, property damage or any consequential damages resulting from misuse or misapplication of the products.
8. Quality Warranty

    8-1. Quality Warranty Period

    In the case of a product purchased through an authorized distributor or directly from us, the warranty period for this product shall be one (1) year after delivery to your company. For defective products that occurred during this period, we will take the quality warranty measures described in section 8-2. However, if there is an agreement on the warranty period in the basic transaction agreement, quality assurance agreement, delivery specifications, etc., it shall be followed.

    8-2. Quality Warranty Remedies

    When it has been proved defective due to manufacturing factors as a result of defect analysis by us, we will either deliver a substitute for the defective product or refund the purchase price of the defective product.
    Note that such delivery or refund is sole and exclusive remedies to your company for the defective product.

    8-3. Remedies after Quality Warranty Period

    With respect to any defect of this product found after the quality warranty period, the defect will be analyzed by us. On the basis of the defect analysis results, the scope and amounts of damage shall be determined by mutual agreement of both parties. Then we will deal with upper limit in Section 8-2. This provision is not intended to limit any legal rights of your company.
9. Anti-radiation design is not implemented in the products described in this document.
10. The X-ray exposure can influence functions and characteristics of the products. Confirm the product functions and characteristics in the evaluation stage.
11. WLCSP products should be used in light shielded environments. The light exposure can influence functions and characteristics of the products under operation or storage.
12. Warning for handling Gallium and Arsenic (GaAs) products (Applying to GaAs MMIC, Photo Reflector). These products use Gallium (Ga) and Arsenic (As) which are specified as poisonous chemicals by law. For the prevention of a hazard, do not burn, destroy, or process chemically to make them as gas or power. When the product is disposed of, please follow the related regulation and do not mix this with general industrial waste or household waste.
13. Please contact our sales representatives should you have any questions or comments concerning the products or the technical information.

NISSHINBO

**Nisshinbo Micro Devices Inc.**

**Official website**
**https://www.nisshinbo-microdevices.co.jp/en/**

**Purchase information**
**https://www.nisshinbo-microdevices.co.jp/en/buy/**

ENTEGRECİ

Bu belge www.entegreci.com üzerinden sunulmaktadır.

# Elektronik komponent tedarikinde Entegreci

Entegreci, Eskişehir merkezli, Türkiye geneline satış yapan bir elektronik komponent mağazasıdır. Entegreler (IC), mikrodenetleyiciler, transistörler, diyotlar, pasif elemanlar, konnektörler, modüller ve geliştirme kartları tek adetten seri üretim adetlerine kadar satılır. Ürün sayfalarında güncel stok durumunu, fiyatı ve datasheet bağlantısını bulabilirsiniz.

### Parça koduyla arama

Üretici parça numarasını yazın; stok ve fiyatı hemen görün.

**www.entegreci.com**

### Ürün kategorileri

Entegreden kapasitöre tüm elektronik komponent kategorileri.

**Kategorilere göz atın**

### Üreticiler

Aradığınız üreticinin ürünlerini tek sayfada inceleyin.

**Üreticileri görün**

### Toplu alım ve teklif

Listede olmayan ya da yüksek adetli parçalar için teklif isteyin.

**Teklif isteyin**

**www.entegreci.com** | **destek@entegreci.com** | **0850 305 90 34**

Entegreci is an online electronic components store based in Türkiye. Search by manufacturer part number to see stock, prices and datasheets for integrated circuits, microcontrollers, transistors, passive components and connectors, or request a quote for parts that are not listed.

Bu sayfa Entegreci tarafından eklenmiştir. Belgenin önceki sayfaları asıl yayıncısına aittir ve içeriği değiştirilmemiştir; en güncel sürüm için belgenin yayıncısına başvurun.