200 mA 36 V Input Ultra Low Supply Current VR

No. EA-332-250609

OUTLINE

The R1524x is an ultra-low supply current voltage regulator featuring 200 mA output current and 36 V input voltage. This device consists of an Output Short-circuit Protection Circuit, an Over-current Protection Circuit, and a Thermal Shutdown Circuit in addition to the basic regulator circuits. The operating temperature range is from −40°C to 105°C, and the maximum input voltage is 36 V. All these features allow the R1524x to become an ideal power source of electric home appliances.

The output voltages are internally fixed (refer to *SELECTION GUIDE*). The output voltage accuracy is ±0.6%. The packages for this device range from high-density mounting to ultra high wattage. The R1524x is offered in five packages; a 5-pin SOT-23-5, a 5-pin SOT-89-5, a 6-pin HSOP-6J, a 6-pin DFN(PL)1820-6, and an 8-pin HSOP-8E package.

FEATURES

- Input Voltage Range (Maximum Rating) ····· 3.5 V to 36 V (50 V)
- Operating Temperature Range ····· –40°C to 105°C
- Supply Current ····· Typ. 2.2 µA
- Standby Current ····· Typ. 0.1 µA
- Dropout Voltage ····· Typ. 0.6 V (I_{OUT} = 200 mA, V_{OUT} = 5.0 V)
- Output Voltage Range ····· 1.8 V / 2.5 V / 2.8 V / 3.0 V / 3.3 V / 3.4V / 5.0 V / 5.5 V / 6.0 V / 6.4 V / 7.0 V / 8.0 V / 8.5 V / 9.0 V / 10.0 V / 10.5 V / 11.0 V / 12.0 V
  *Contact our sales representatives for other voltages.
- Output Voltage Accuracy ····· ±0.6% (Ta = 25°C)
- Output Voltage Temperature-Drift Coefficient ····· Typ. ±60 ppm/°C
- Line Regulation ····· Typ. 0.01%/V (V_{SET} + 1 V ≤ V_{IN} ≤ 36 V)
- Built-in Output Short-circuit Protection Circuit ····· Typ. 80 mA
- Built-in Over-current Protection Circuit ····· Typ. 350 mA
- Built-in Thermal Shutdown Circuit ····· Thermal Shutdown Temperature: Typ. 160°C
- Ceramic capacitors are recommended to be used with this device ····· C_{OUT} = 0.1 µF or more
- Packages ····· SOT-23-5, SOT-89-5, HSOP-6J, DFN(PL)1820-6, HSOP-8E

APPLICATIONS

- Power source for home appliances such as refrigerators, rice cookers, and electric hot-water pot.
- Power source for notebook PCs, digital TVs, cordless phones, and private LAN system.
- Power source for office equipment machines such as copiers, printers, facsimiles, scanners, and projectors.

SELECTION GUIDE

The set output voltage and the package type are user-selectable.

Selection Guide

Product Name	Package	Quantity per Reel	Pb Free	Halogen Free
R1524NxxxB-TR-FE	SOT-23-5	3,000 pcs	Yes	Yes
R1524HxxxB-T1-FE	SOT-89-5	1,000 pcs	Yes	Yes
R1524SxxxB-E2-FE	HSOP-6J	1,000 pcs	Yes	Yes
R1524KxxxB-TR	DFN(PL)1820-6	5,000 pcs	Yes	Yes
R1524SxxxH-E2-FE	HSOP-8E	1,000 pcs	Yes	Yes

xxx: Specify the set output voltage (V_{SET})
1.8 V (018) / 2.5 V (025) / 2.8 V (028) / 3.0 V (030) / 3.3 V (033) / 3.4 V (034) / 5.0 V (050) / 5.5 V (055) / 6.0 V (060) / 6.4 V (064) / 7.0 V (070) / 8.0 V (080) / 8.5 V (085) / 9.0 V (090) / 10.0 V (100) / 10.5 V (105) / 11.0 V (110) / 12.0 V (120)
*Contact our sales representatives for other voltages.

BLOCK DIAGRAM

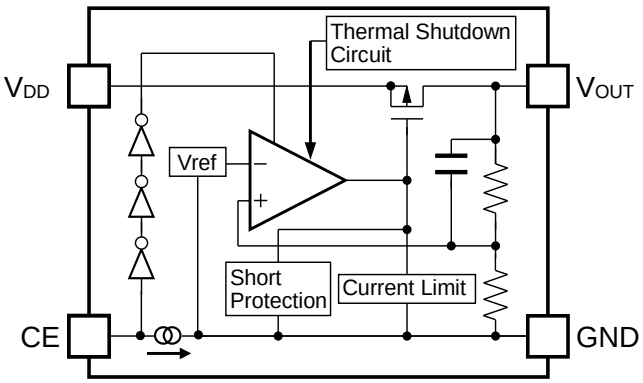

R1524x Block Diagram

PIN DESCRIPTIONS

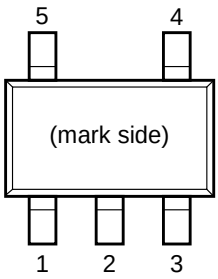

SOT-23-5 Pin Configuration

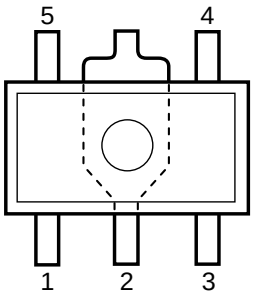

SOT-89-5 Pin Configuration

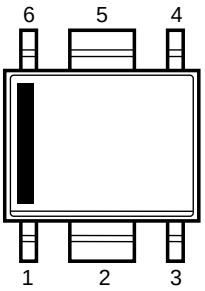

HSOP-6J Pin Configuration

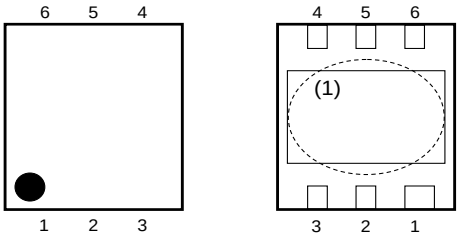

DFN(PL)1820-6 Pin Configuration

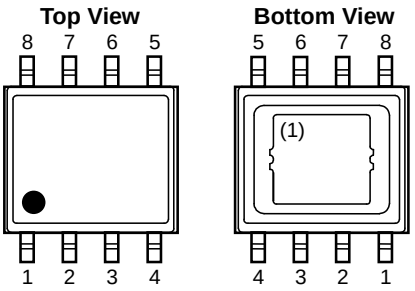

HSOP-8E Pin Configuration

SOT-23-5 Pin Descriptions

Pin No.	Symbol	Description
1	GND(2)	Ground Pin
2	GND(2)	Ground Pin
3	CE	Chip Enable Pin (Active-high)
4	V_{OUT}	Output Pin
5	V_{DD}	Input Pin

SOT-89-5 Pin Descriptions

Pin No.	Symbol	Description
1	V_{OUT}	Output Pin
2	GND(3)	Ground Pin
3	CE	Chip Enable Pin (Active-high)
4	GND(3)	Ground Pin
5	V_{DD}	Input Pin

(1) The tab on the bottom of the package enhances thermal performance and is electrically connected to GND (substrate level). It is recommended that the tab be connected to the ground plane on the board, or otherwise be left open.
(2) The GND pin must be wired together when it is mounted on board.
(3) The GND pin must be wired together when it is mounted on board.

HSOP-6J Pin Descriptions

Pin No.	Symbol	Description
1	V_{OUT}	Output Pin
2	GND(1)	Ground Pin
3	CE	Chip Enable Pin (Active-high)
4	GND(1)	Ground Pin
5	GND(1)	Ground Pin
6	V_{DD}	Input Pin

DFN(PL)1820-6 Pin Descriptions

Pin No.	Symbol	Description
1	CE	Chip Enable Pin (Active-high)
2	NC	No Connection
3	GND	Ground Pin
4	V_{DD}	Input Pin
5	NC	No Connection
6	V_{OUT}	Output Pin

HSOP-8E Pin Descriptions

Pin No.	Symbol	Description
1	V_{OUT}	Output Pin
2	NC	No Connection
3	NC	No Connection
4	CE	Chip Enable Pin (Active-high)
5	GND	Ground Pin
6	NC	No Connection
7	NC	No Connection
8	V_{DD}	Input Pin

PIN EQUIVALENT CIRCUIT DIAGRAMS

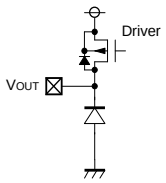

V_{OUT} Pin

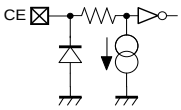

CE Pin

(1) The GND pin must be wired together when it is mounted on board.

ABSOLUTE MAXIMUM RATINGS

Absolute Maximum Ratings

Symbol	Item		Rating	Unit
V_{IN}	Input Voltage		−0.3 to 50	V
V_{IN}	Peak Input Voltage(1)		60	V
V_{CE}	Input Voltage (CE Pin)		−0.3 to 50	V
V_{OUT}	Output Voltage		−0.3 to V_{IN} + 0.3 ≤ 50	V
I_{OUT}	Output Current		300	mA
P_D	Power Dissipation(2) (JEDEC STD.51-7 Test Land Pattern)	SOT-23-5	660	mW
		SOT-89-5	2600	
		HSOP-6J	2700	
		DFN(PL)1820-6	2200	
		HSOP-8E	2900	
Tj	Junction Temperature Range		−40 to 125	°C
Tstg	Storage Temperature Range		−55 to 125	°C

ABSOLUTE MAXIMUM RATINGS

Electronic and mechanical stress momentarily exceeded absolute maximum ratings may cause permanent damage and may degrade the lifetime and safety for both device and system using the device in the field. The functional operation at or over these absolute maximum ratings are not assured.

RECOMMENDED OPERATING CONDITIONS

Recommended Operating Conditions

Symbol	Item	Rating	Unit
V_{IN}	Input Voltage	3.5 to 36	V
Ta	Operating Temperature Range	−40 to 105	°C

RECOMMENDED OPERATING CONDITIONS

All of electronic equipment should be designed that the mounted semiconductor devices operate within the recommended operating conditions. The semiconductor devices cannot operate normally over the recommended operating conditions, even if they are used over such conditions by momentary electronic noise or surge. And the semiconductor devices may receive serious damage when they continue to operate over the recommended operating conditions.

(1) Duration time: 200 ms
(2) Refer to *POWER DISSIPATION* for detailed information.

ELECTRICAL CHARACTERISTICS

C_{IN} = C_{OUT} = 0.1 µF, unless otherwise noted.

The specifications surrounded by ☐ are guaranteed by design engineering at -40°C ≤ Ta ≤ 105°C.

R1524x Electrical Characteristics (Ta = 25°C)

Symbol	Item	Conditions		Min.	Typ.	Max.	Unit
I_{SS}	Supply Current	V_{IN} = 14 V, I_{OUT} = 0 mA	V_{SET} ≤ 5.0 V		2.2	6.5	µA
			5.0 V < V_{SET}		2.5	6.8	
Istandby	Standby Current	V_{IN} = 36 V, V_{CE} = 0 V			0.1	1.0	µA
V_{OUT}	Output Voltage	V_{SET} + 1 V[1] ≤ V_{IN} ≤ 36 V, I_{OUT} = 1 mA	Ta = 25°C	×0.994		×1.006	V
			−40°C ≤ Ta ≤ 105°C	×0.984		×1.016	
ΔV_{OUT} /ΔI_{OUT}	Load Regulation	V_{IN} = V_{SET} + 3.0 V, 1 mA ≤ I_{OUT} ≤ 200 mA		Refer to the *Product-specific Electrical Characteristics*			
ΔV_{OUT} /ΔV_{IN}	Line Regulation	V_{SET} + 1 V[1] ≤ V_{IN} ≤ 36 V, I_{OUT} = 1 mA	V_{SET} < 3.3 V	-20	5	20	mV
			3.3 V ≤ V_{SET}	-0.02	0.01	0.02	%/V
V_{DIF}	Dropout Voltage	I_{OUT} = 200 mA		Refer to the *Product-specific Electrical Characteristics*			
I_{LIM}	Output Current Limit	V_{IN} = V_{SET} + 3.0 V		220	350		mA
I_{SC}	Short Current Limit	V_{IN} = 3.5 V, V_{OUT} = 0 V		60	80		mA
V_{CEH}	CE Pin Input Voltage, high	V_{IN} = V_{SET} + 1 V[1]		2.0		36	V
V_{CEL}	CE Pin Input Voltage, low	V_{IN} = 36 V		0		1.0	V
I_{PD}	CE Pull-down Current	V_{IN} = 36 V, V_{CE} = 2 V			0.2	0.6	µA
T_{TSD}	Thermal Shutdown Detection Temperature	Junction Temperature			160		°C
T_{TSR}	Thermal Shutdown Released Temperature	Junction Temperature			135		°C

All test items listed under Electrical Characteristics are done under the pulse load condition (Tj ≈ Ta = 25°C).

[1] V_{SET} ≤ 2.5 V, V_{IN} = 3.5 V

The specifications surrounded by ☐ are guaranteed by design engineering at -40°C ≤ Ta ≤ 105°C.

R1524x Product-specific Electrical Characteristics (Ta = 25°C)

Product Name	V_{OUT} (V) (Ta = 25°C)			V_{OUT} (V) (−40°C ≤ Ta ≤ 105°C)			$\Delta V_{OUT}/\Delta I_{OUT}$ (mV)			V_{DIF} (V)	
	MIN.	TYP.	MAX.	MIN.	TYP.	MAX.	MIN.	TYP.	MAX.	TYP.	MAX.
R1524x018x	1.7892	1.80	1.8108	1.7712	1.80	1.8288				1.6	2.5
R1524x025x	2.4850	2.50	2.5150	2.4600	2.50	2.5400					
R1524x028x	2.7832	2.80	2.8168	2.7552	2.80	2.8448				1.2	2.2
R1524x030x	2.9820	3.00	3.0180	2.9520	3.00	3.0480	-10	10	40		
R1524x033x	3.2802	3.30	3.3198	3.2472	3.30	3.3528				0.8	2.0
R1524x034x	3.3796	3.40	3.4204	3.3456	3.40	3.4544					
R1524x050x	4.9700	5.00	5.0300	4.9200	5.00	5.0800					
R1524x055x	5.4670	5.50	5.5330	5.4120	5.50	5.5880					
R1524x060x	5.9640	6.00	6.0360	5.9040	6.00	6.0960				0.6	
R1524x064x	6.3616	6.40	6.4384	6.2976	6.40	6.5024					
R1524x070x	6.9580	7.00	7.0420	6.8880	7.00	7.1120					
R1524x080x	7.9520	8.00	8.0480	7.8720	8.00	8.1280					1.2
R1524x085x	8.4490	8.50	8.5510	8.3640	8.50	8.6360	-18	18	72		
R1524x090x	8.9460	9.00	9.0540	8.8560	9.00	9.1440					
R1524x100x	9.9400	10.0	10.0600	9.8400	10.0	10.1600				0.5	
R1524x105x	10.4370	10.5	10.5630	10.3320	10.5	10.6680					
R1524x110x	10.9340	11.0	11.0660	10.8240	11.0	11.1760					
R1524x120x	11.9280	12.0	12.0720	11.8080	12.0	12.1920					

THEORY OF OPERATION

Thermal Shutdown

R1524x has a built-in thermal shutdown circuit, which stops the regulator operation if the junction temperature of this device increases to 160°C (Typ.) or higher. If the temperature drops to 135°C (Typ.) or lower, the regulator restarts the operation. Unless eliminating the overheating problem, the regulator turns on and off repeatedly and as a result, a pulse shaped output voltage is generated.

APPLICATION INFORMATION

TYPICAL APPLICATIONS

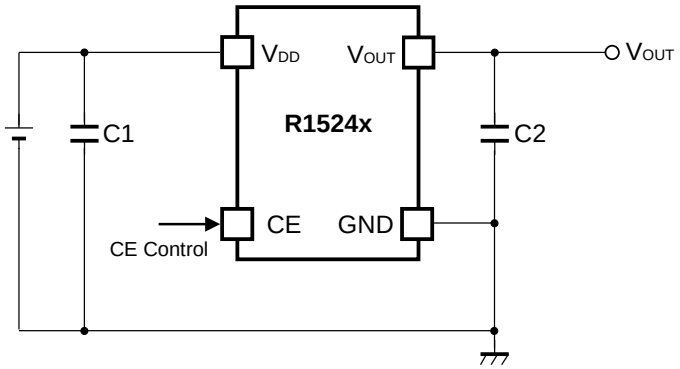

C1 = Ceramic 0.1 µF
C2 = Ceramic 0.1 µF

R1524x Typical Applications

TECHNICAL NOTES

Phase Compensation

In the R1524x, phase compensation is provided to secure stable operation even when the load current is varied. For this purpose, make sure to use 0.1 µF or more of a capacitor (C2).

In case of using a tantalum type capacitor and the ESR (Equivalent Series Resistance) value of the capacitor is large, the output might be unstable. Evaluate the circuit including consideration of frequency characteristics.

Connect 0.1 µF or more of a capacitor (C1) between V_{DD} and GND, and as close as possible to the pins.

PCB Layout

For SOT-23-5 package type, wire the following GND pins together: No. 1 and No. 2

For SOT-89-5 package type, wire the following GND pins together: No. 2 and No. 4.

For HSOP-6J package type, wire the following GND pins together: No. 2, No. 4, and No. 5.

TYPICAL CHARACTERISTICS

Note: Typical Characteristics are intended to be used as reference data; they are not guaranteed.

1) Output Voltage vs. Output Current (Ta = 25°C)

R1524x018B

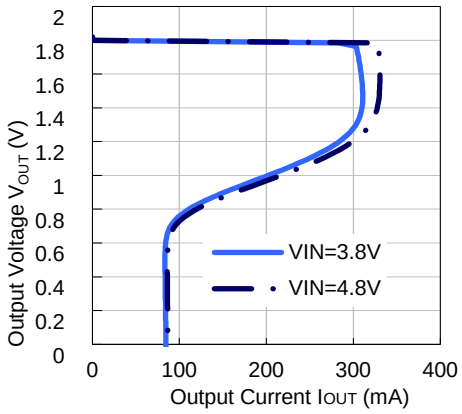

R1524x033B

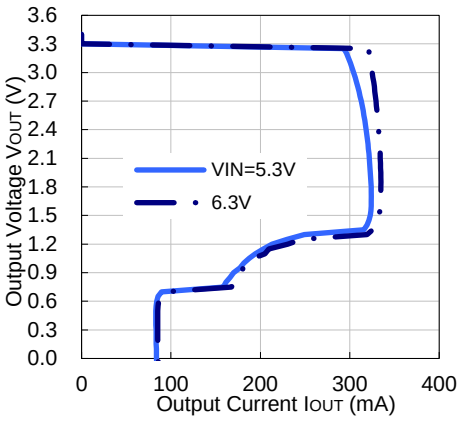

R1524x050B

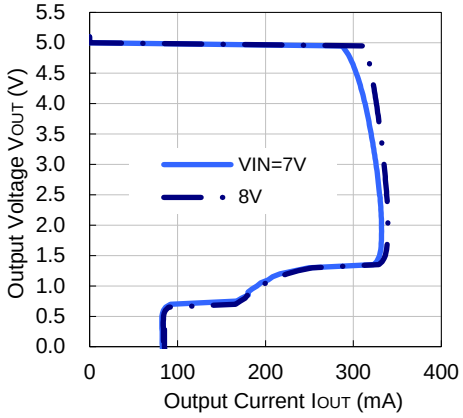

R1524x090B

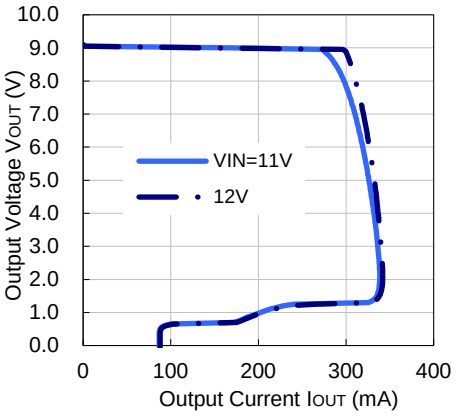

R1524x120B

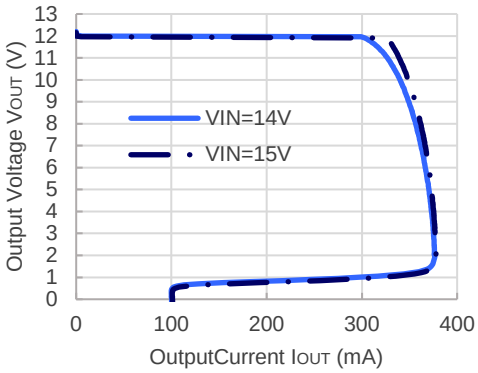

2) Output Voltage vs. Input Voltage (Ta = 25°C)

R1524x018B

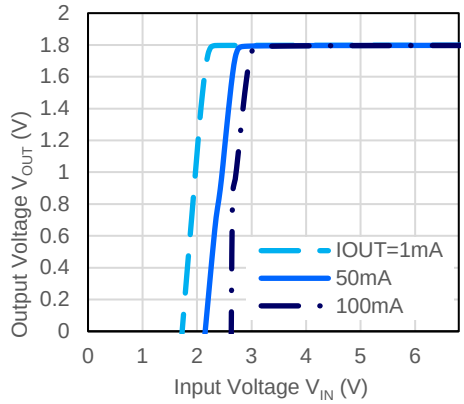

R1524x033B

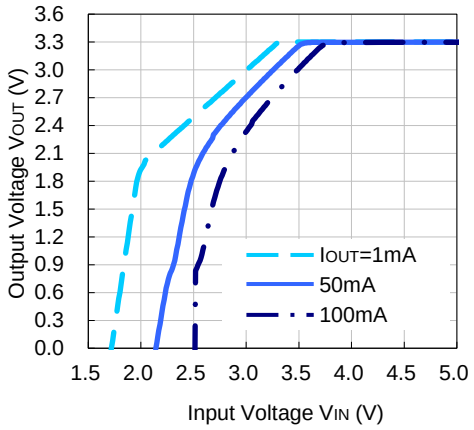

R1524x050B

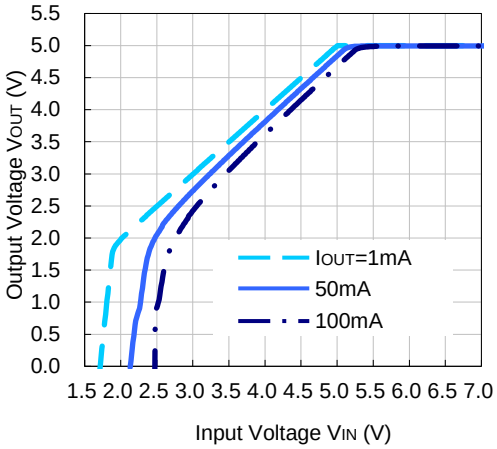

R1524x090B

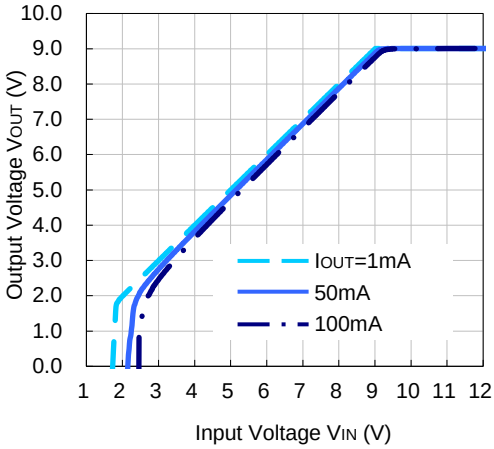

R1524x120B

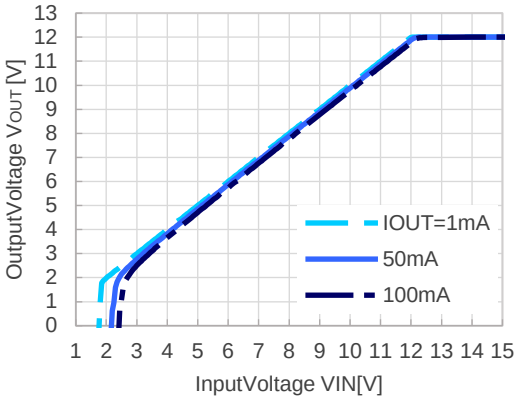

3) Supply Current vs. Temperature

R1524x018B

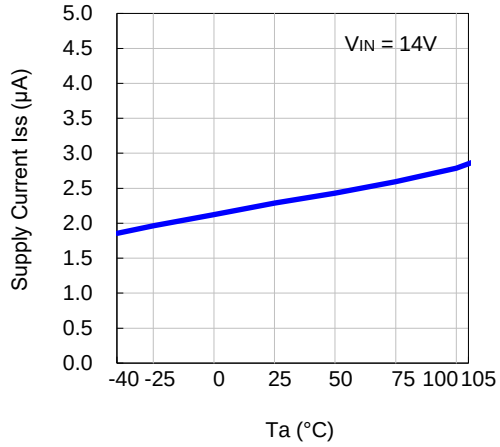

R1524x033B

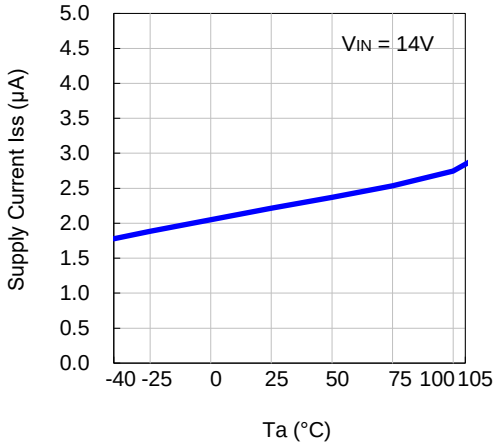

R1524x050B

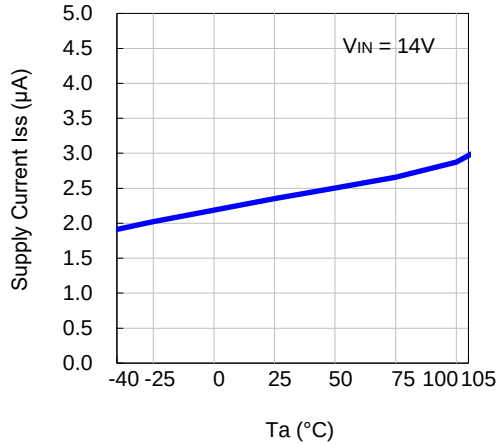

R1524x090B

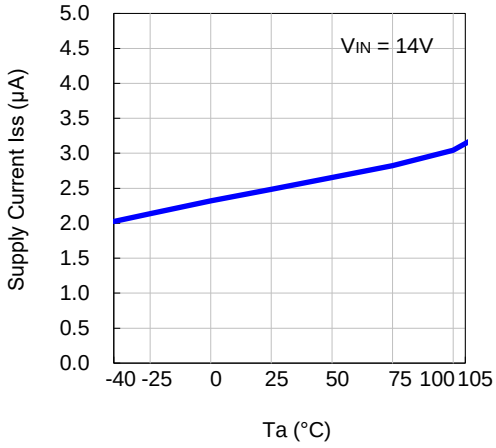

R1524x120B

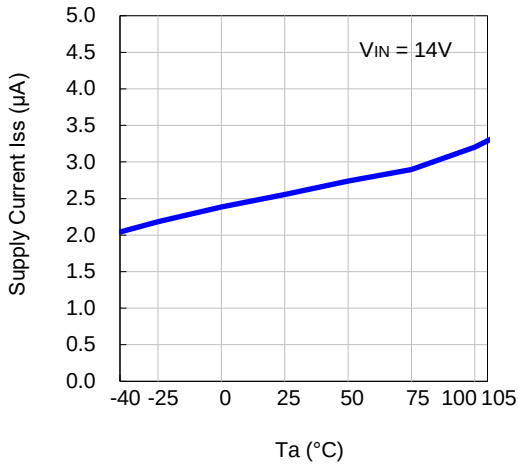

4) Supply Current vs. Input Voltage

R1524x018B

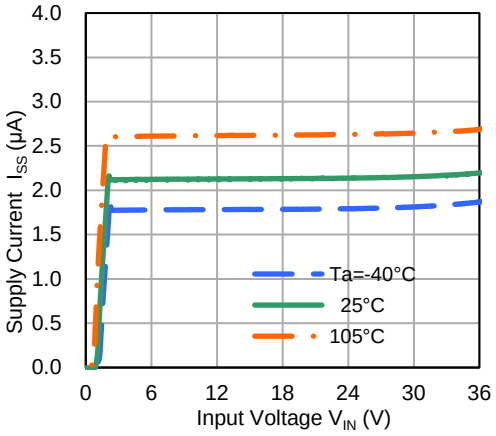

R1524x033B

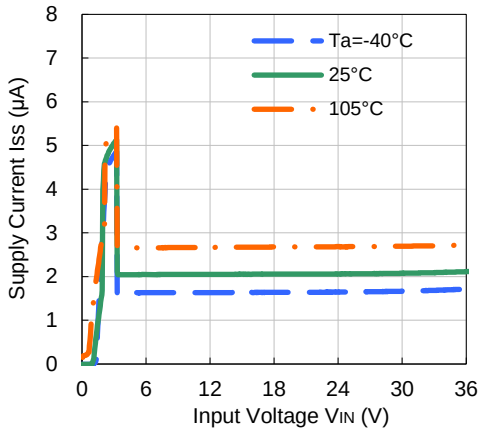

R1524x120B

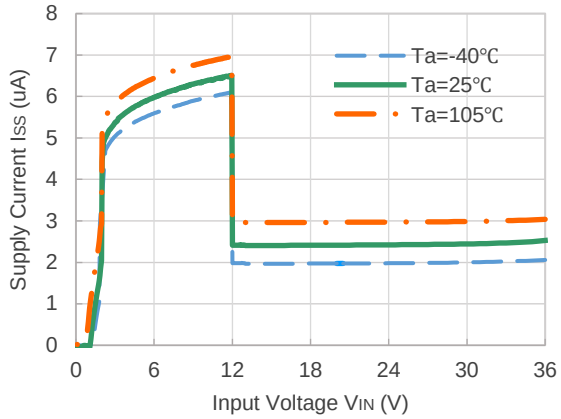

5) Output Voltage vs. Temperature (I_{OUT} = 1 mA)

R1524x018B

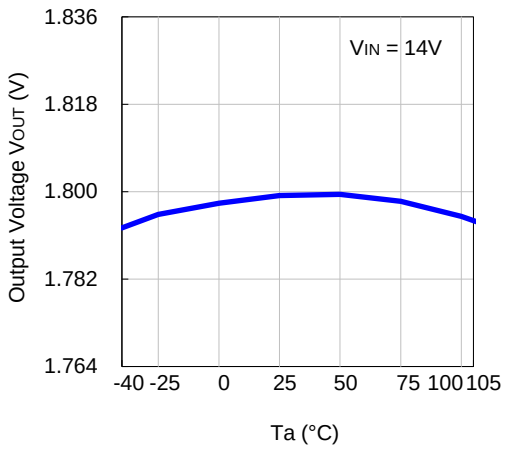

R1524x033B

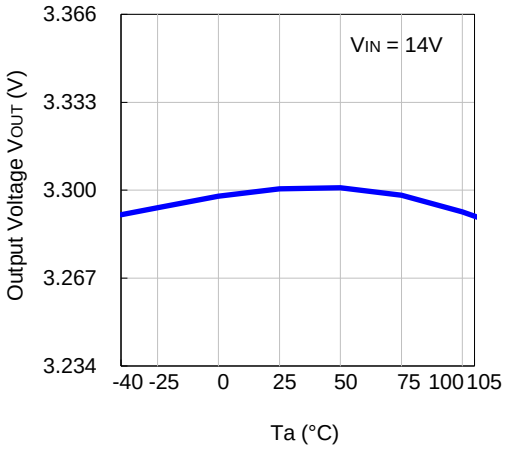

R1524x050B

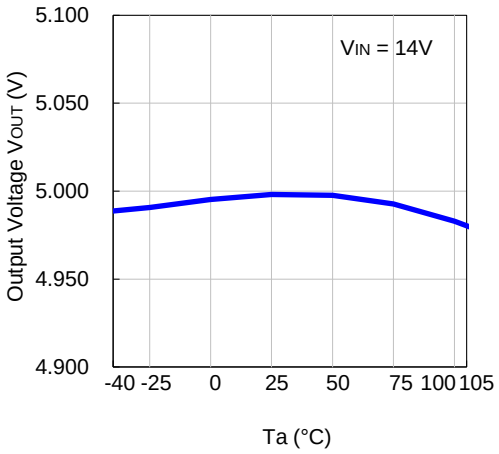

R1524x090B

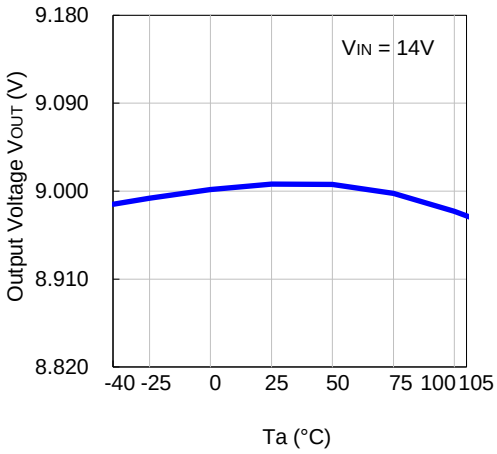

R1524x120B

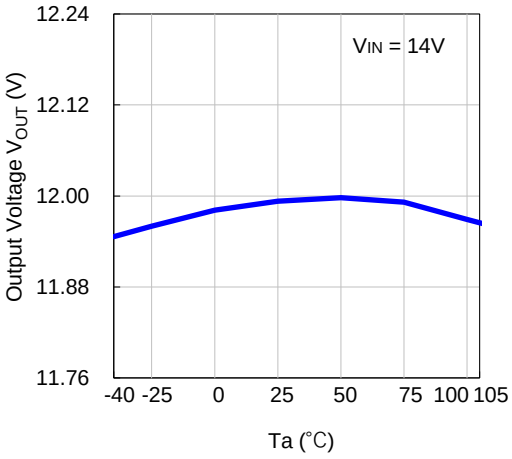

6) Dropout Voltage vs. Output Current

R1524x018B

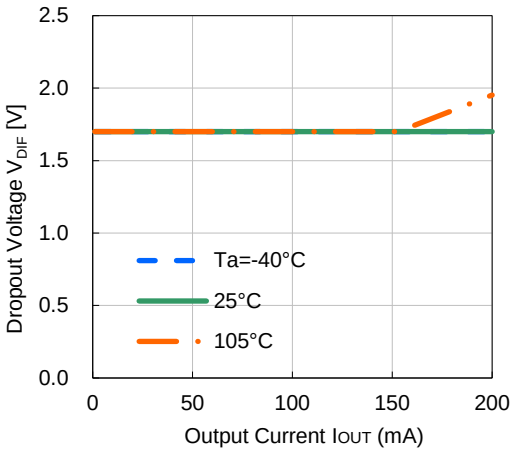

R1524x033B

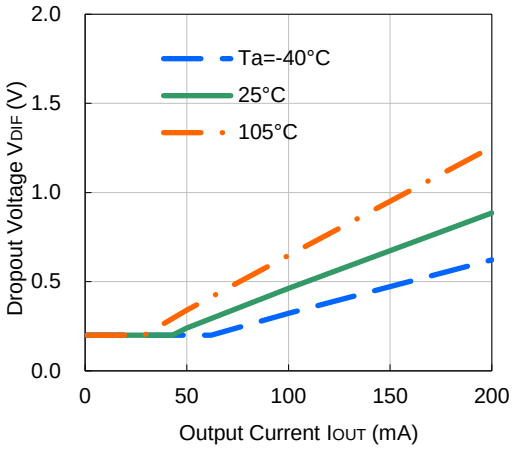

R1524x050B

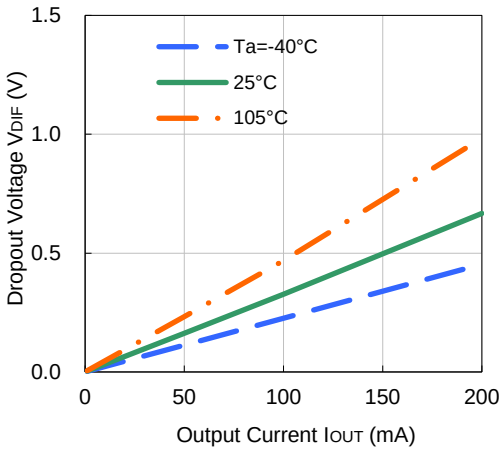

R1524x090B

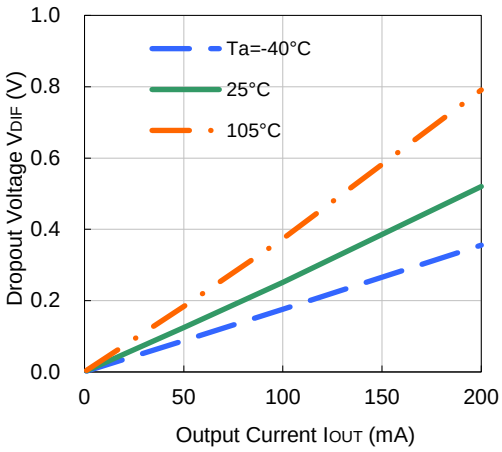

R1524x120B

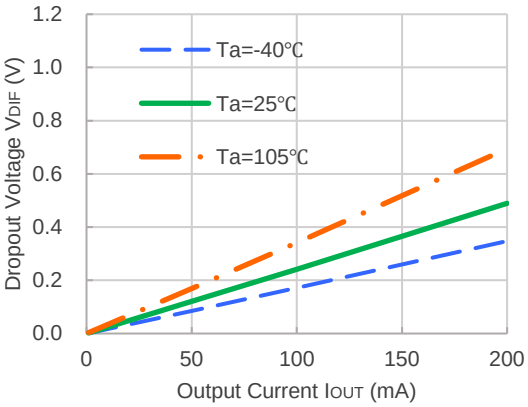

7) Dropout Voltage vs. Output Voltage (Ta = 25°C)

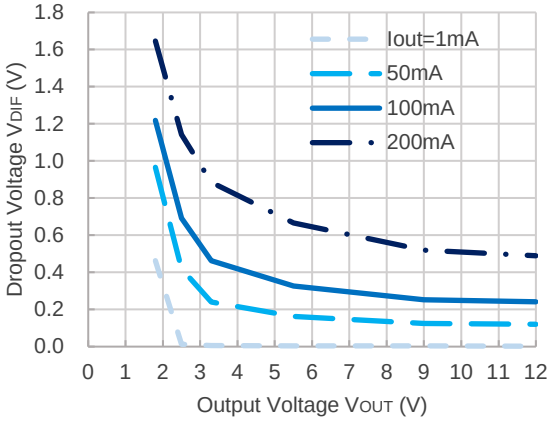

8) Ripple Rejection vs. Input Voltage (Ta = 25°C, Ripple = 0.2Vpp, Iout = 50mA)

R1524x018B (C_2 = 0.1µF)

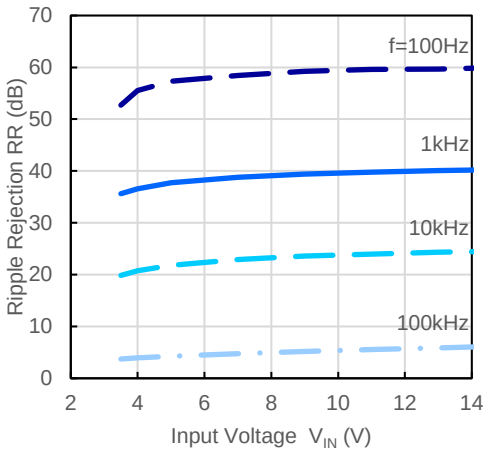

R1524x018B (C_2 = 10µF)

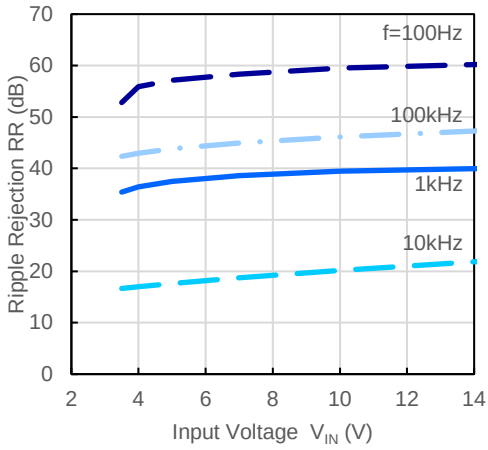

R1524x033B (C_2 = 0.1µF)

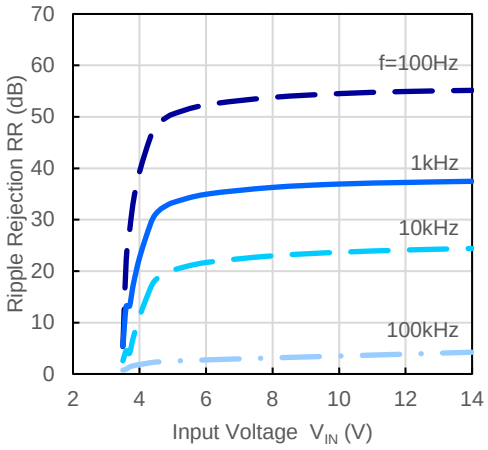

R1524x033B (C_2 = 10µF)

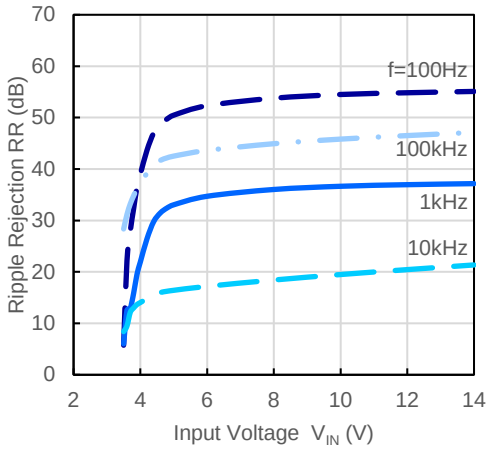

R1524x050B (C_2 = 0.1µF)

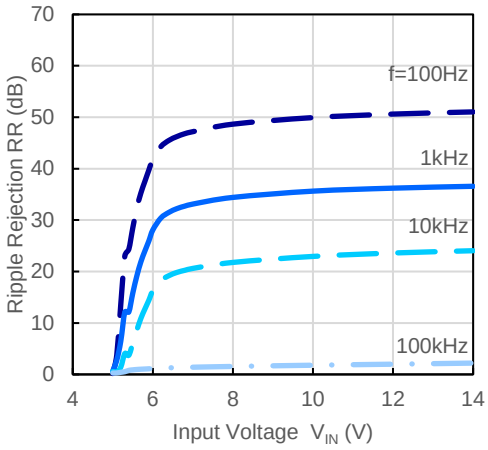

R1524x050B (C_2 = 10µF)

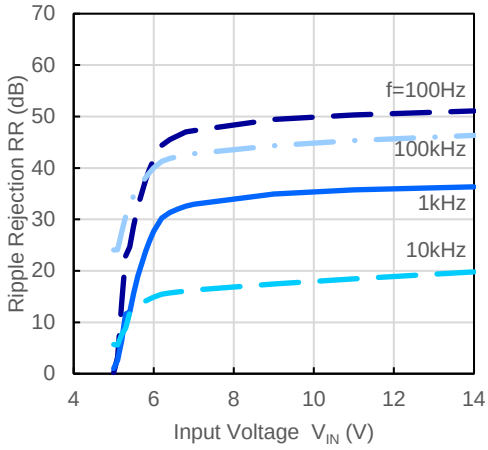

R1524x090B (C_2 = 0.1µF)

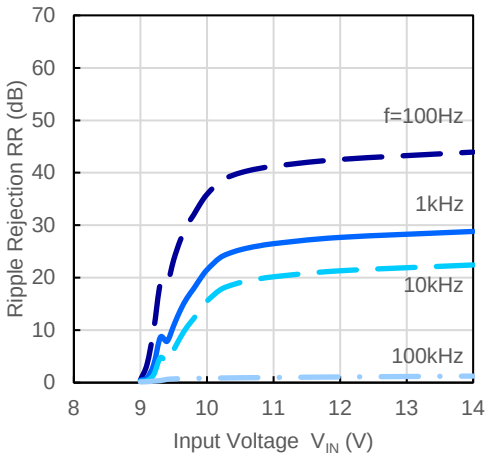

R1524x090B (C_2 = 10µF)

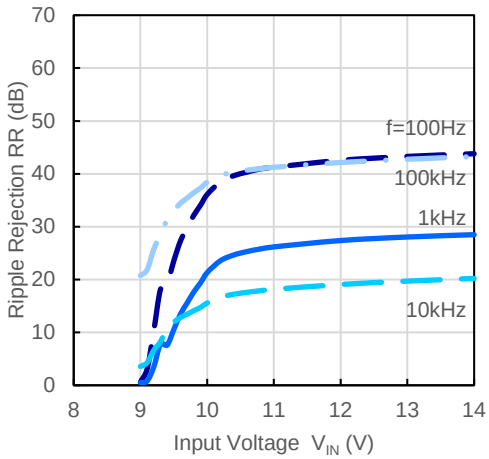

R1524x120B (C_2 = 0.1µF)

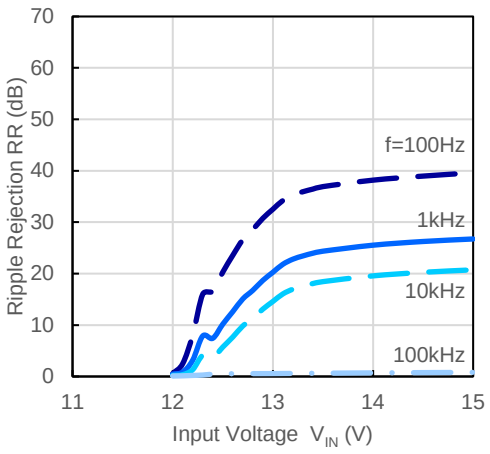

R1524x120B (C_2 = 10µF)

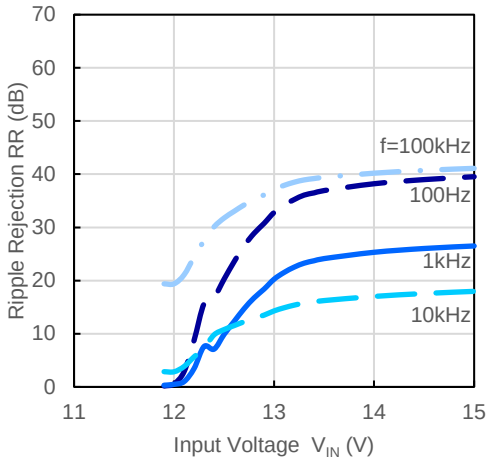

9) Ripple Rejection vs. Frequency (Ta = 25°C, Ripple = 0.2Vpp)

R1524x018B (C_2 = 0.1µF)

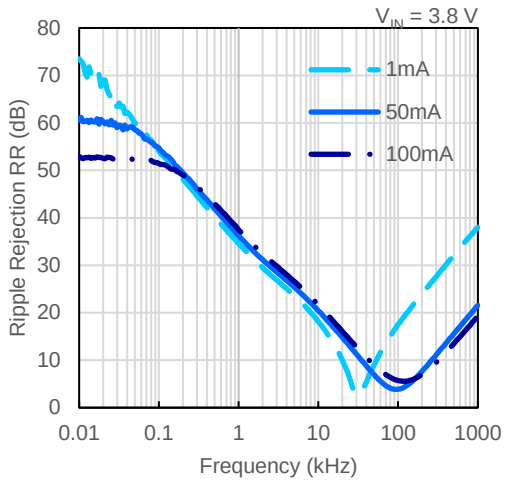

R1524x018B (C_2 = 10µF)

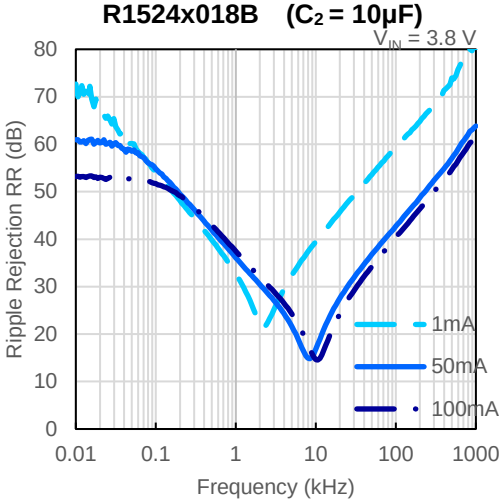

R1524x033B (C_2 = 0.1µF)

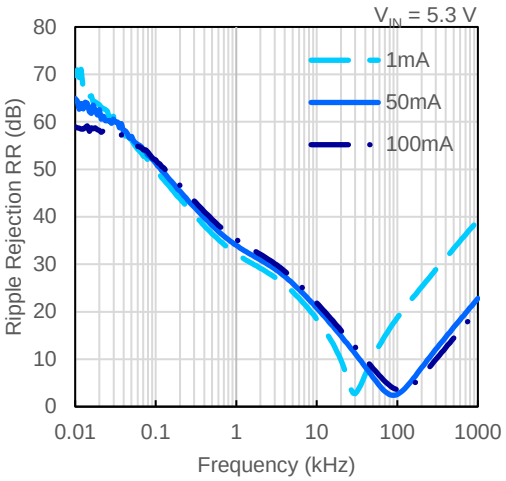

R1524x033B (C_2 = 10µF)

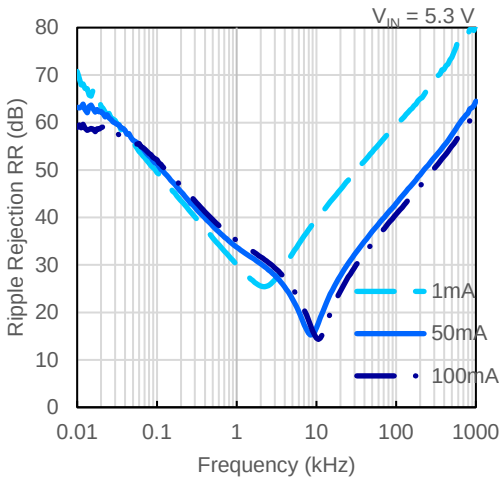

R1524x050B (C_2 = 0.1µF)

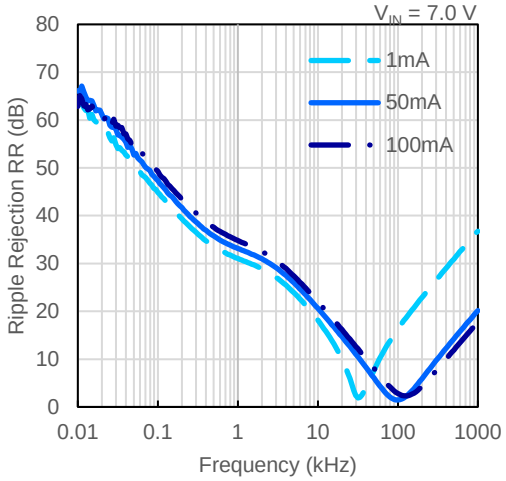

R1524x050B (C_2 = 10µF)

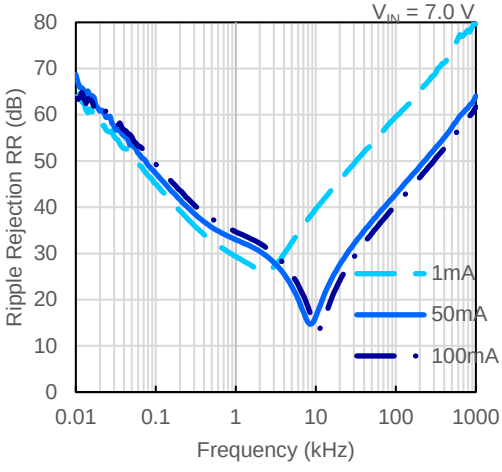

R1524x090B (C_2 = 0.1µF)

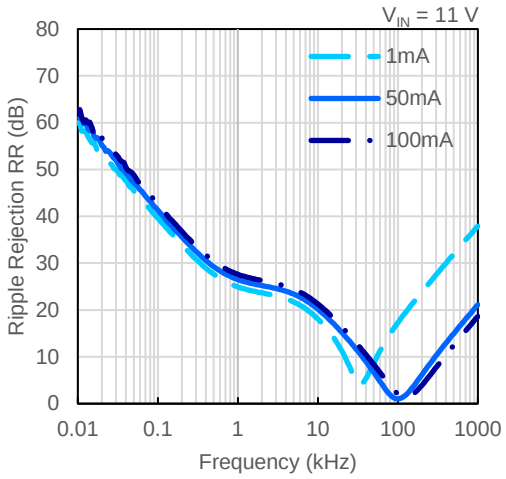

R1524x090B (C_2 = 10µF)

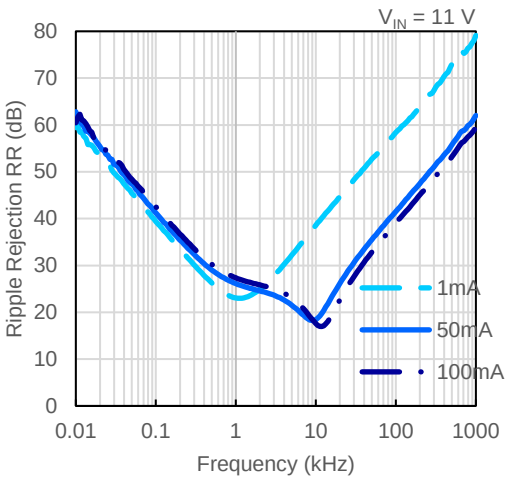

R1524x120B (C_2 = 0.1µF)

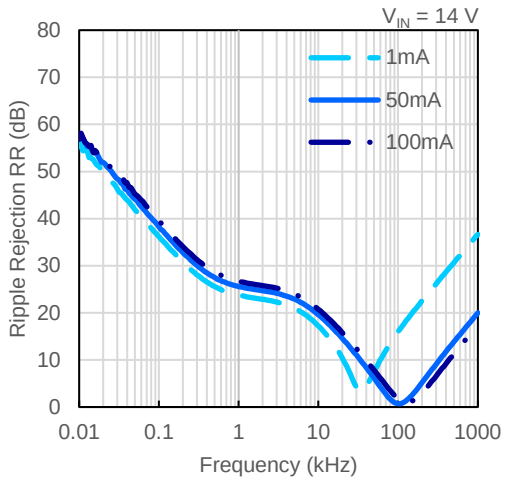

R1524x120B (C_2 = 10µF)

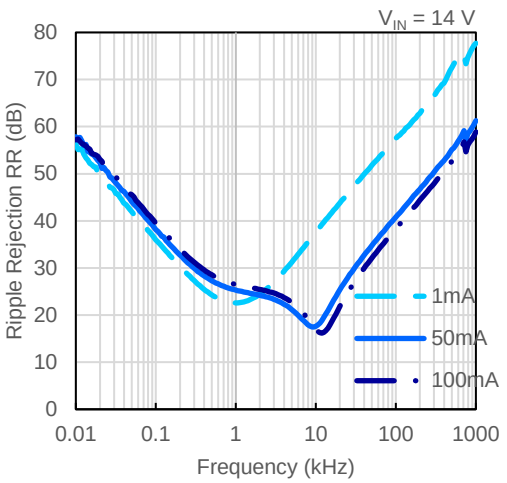

10) Input Transient Response (Ta = 25°C)

R1524x018B

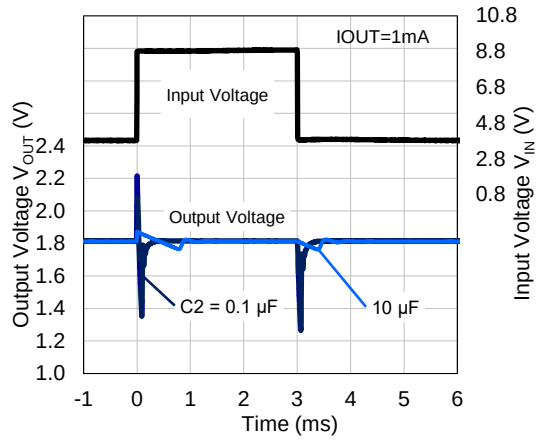

R1524x033B

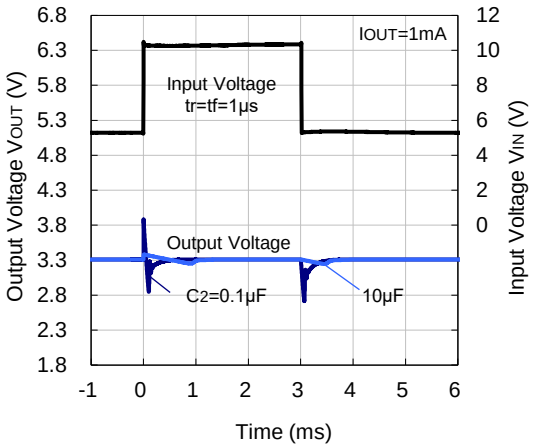

R1524x050B

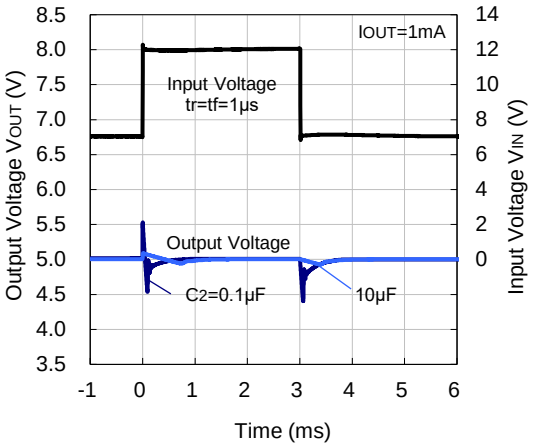

R1524x090B

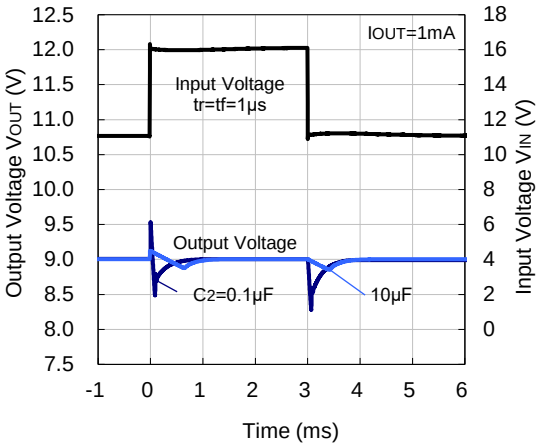

R1524x120B

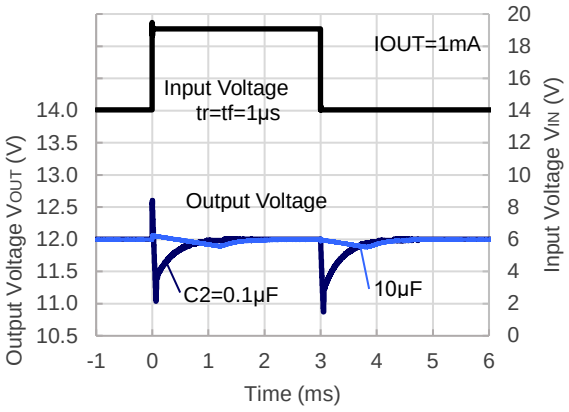

11) Load Transient Response (Ta = 25°C)

R1524x018B

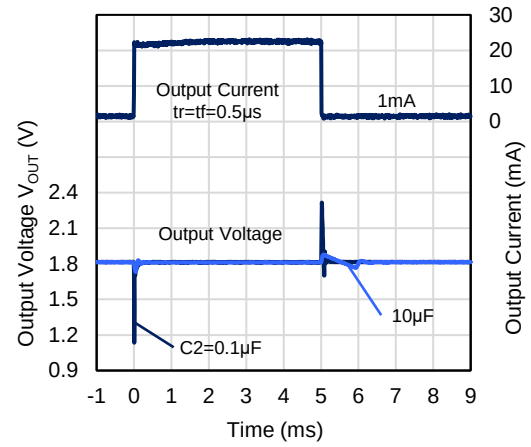

R1524x033B

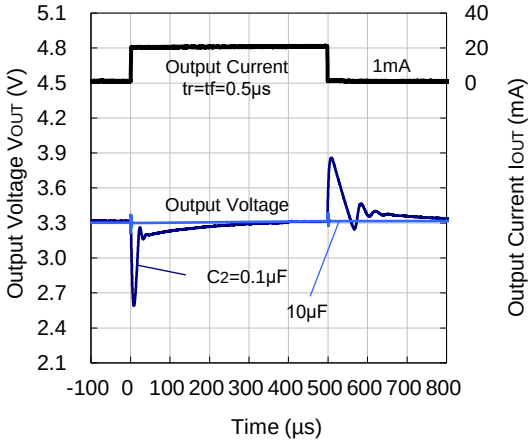

R1524x050B

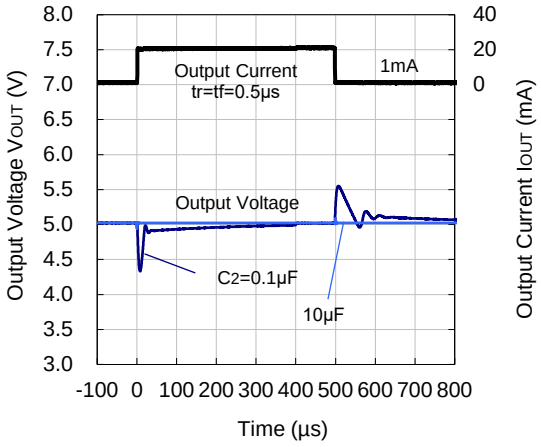

R1524x090B

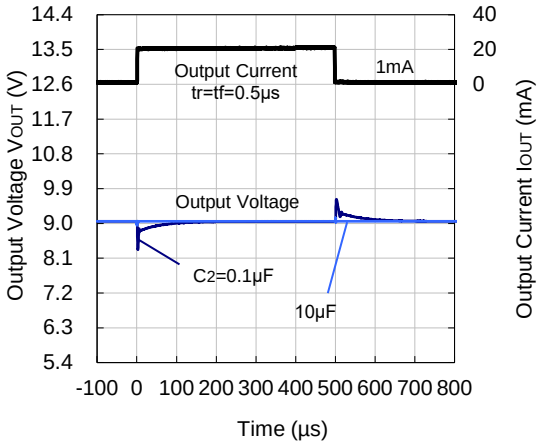

R1524x120B

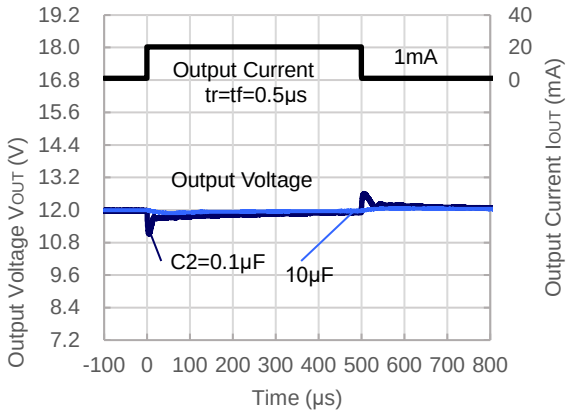

12) CE Transient Response (Ta = 25°C)

R1524x018B

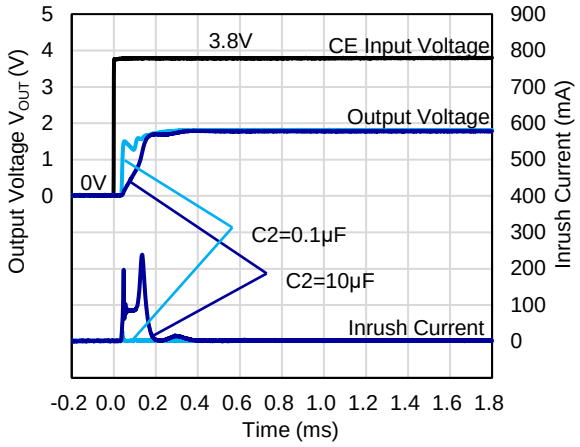

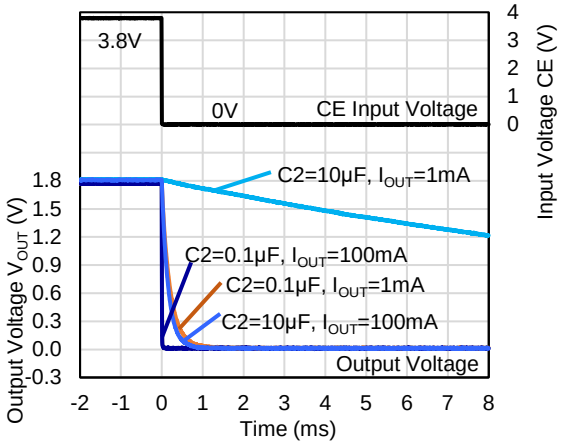

R1524x033B

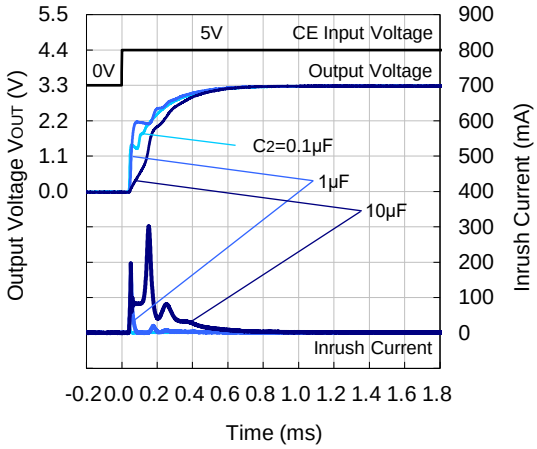

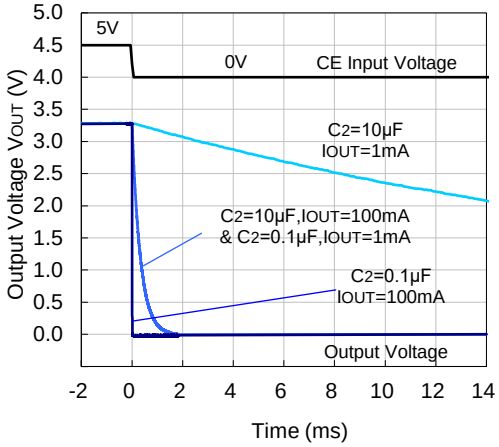

R1524x050B

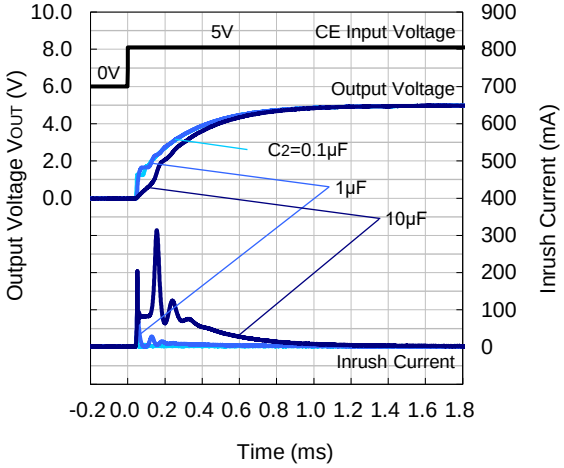

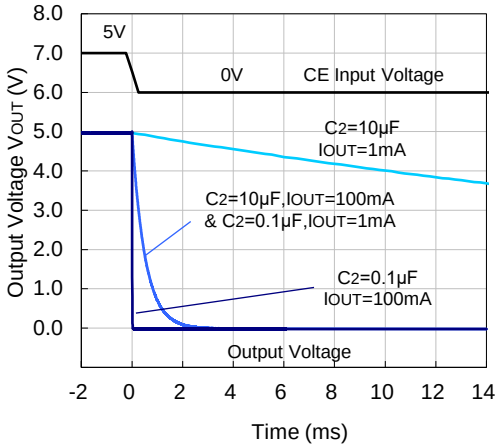

R1524x090B

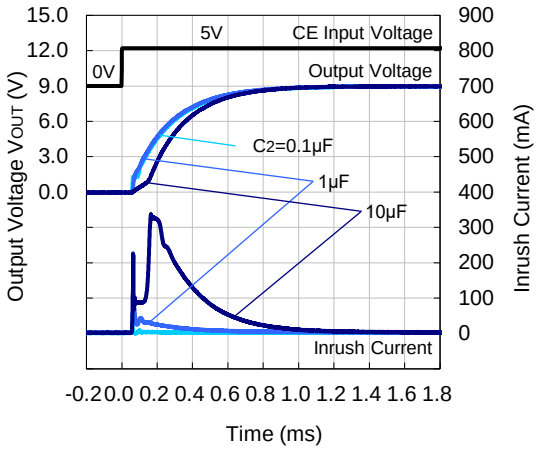

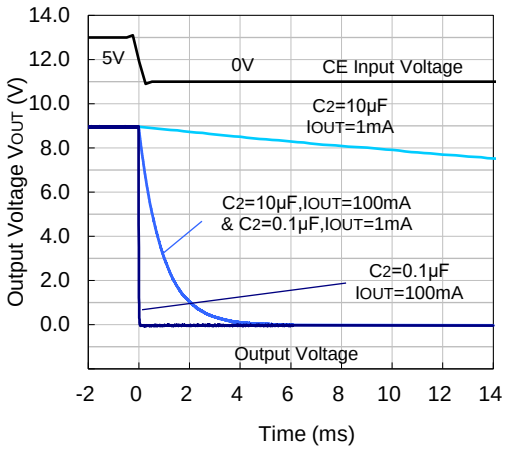

R1524x120B

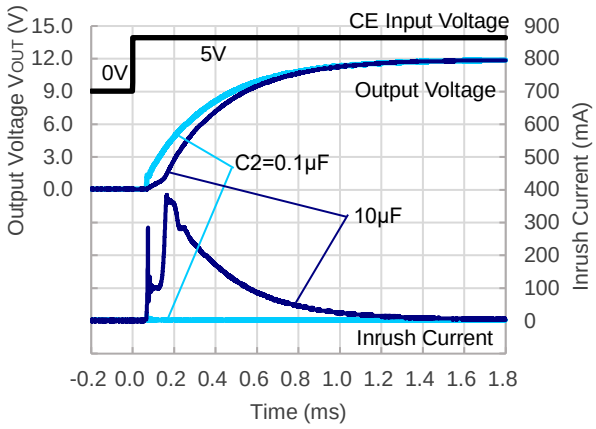

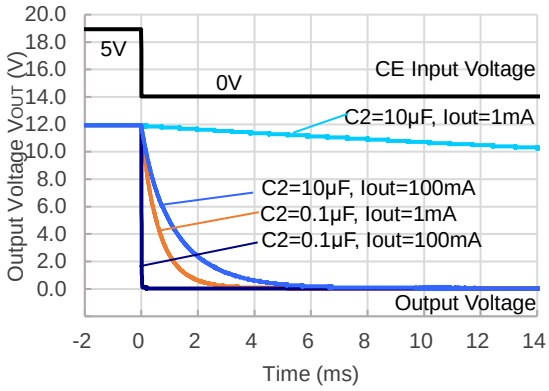

13) Power-on Transient Response (Ta = 25°C, V_{CE} = 5 V)

R1524x018B

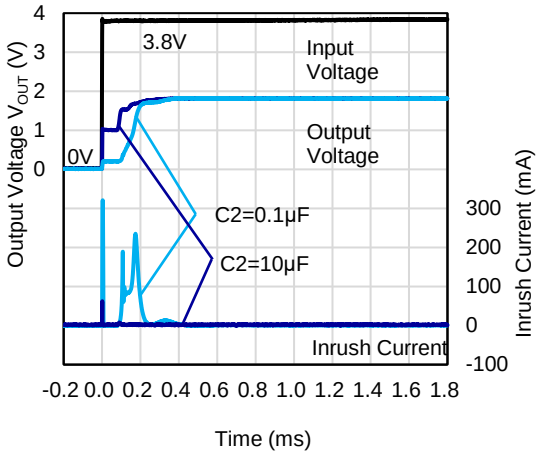

R1524x033B

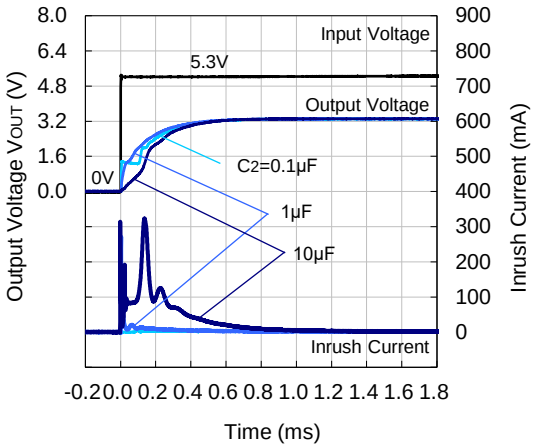

R1524x050B

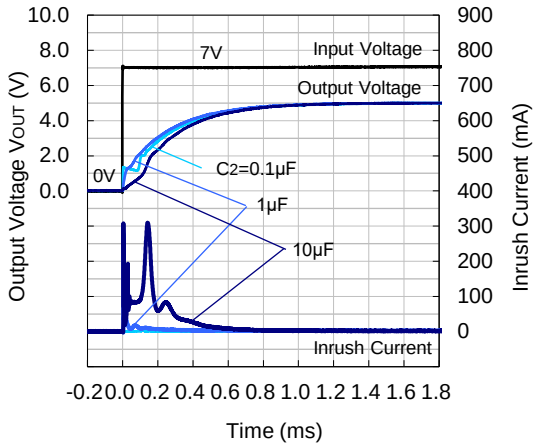

R1524x090B

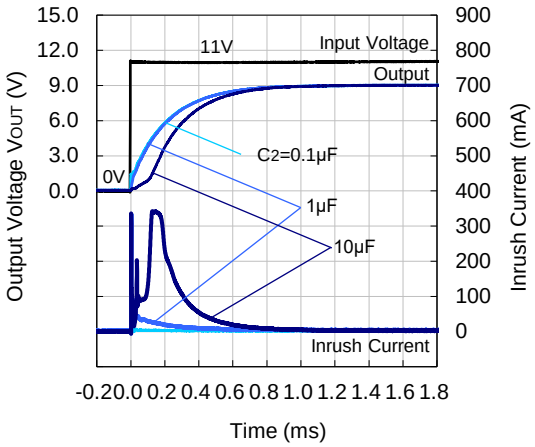

R1524x120B

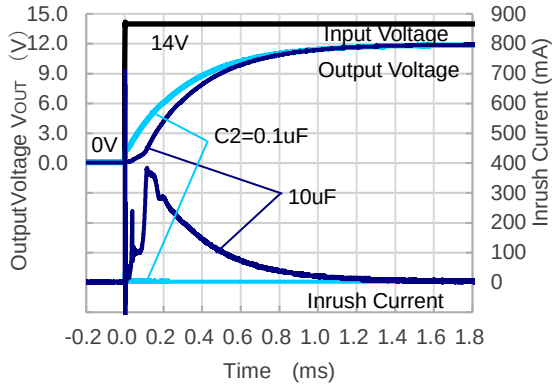

14) Load Dump (Ta = 25°C)

R1524x018B

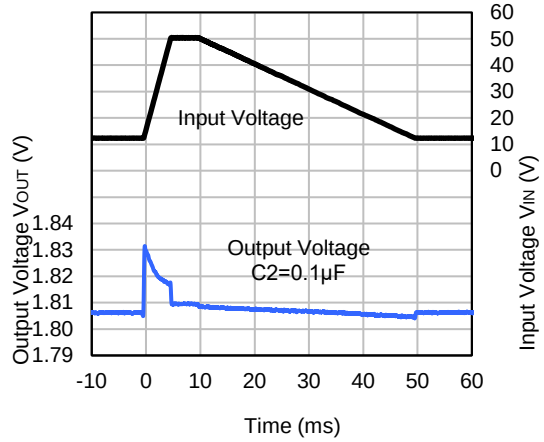

R1524x033B

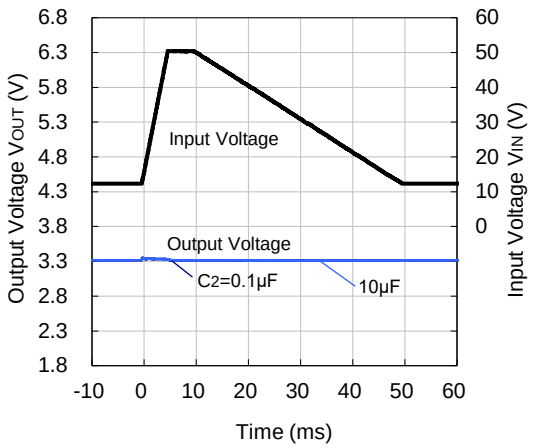

R1524x050B

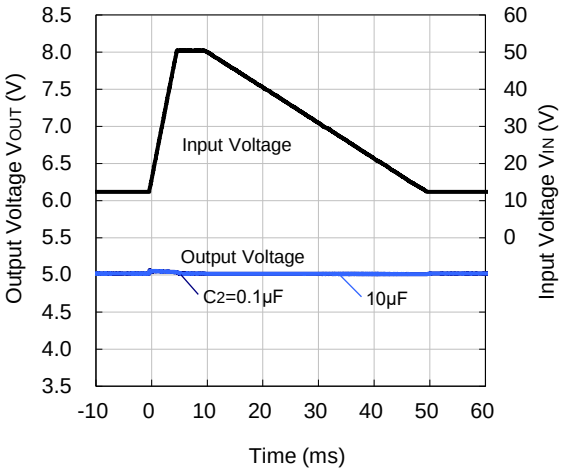

R1524x090B

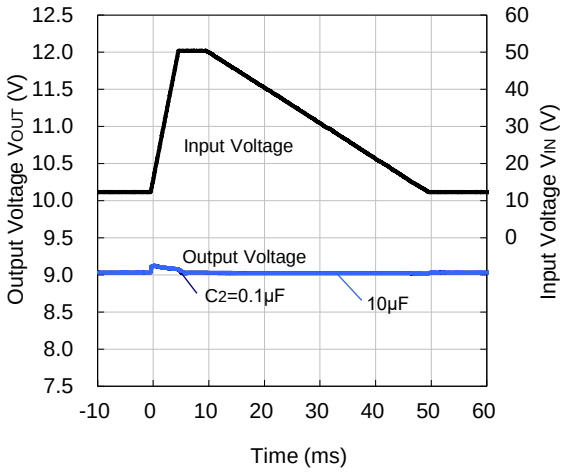

R1524x120B

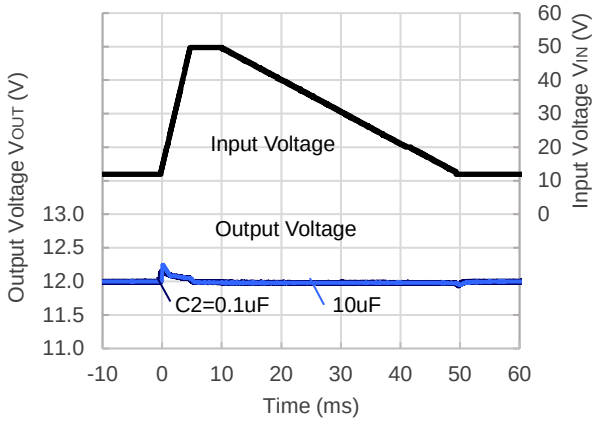

15) Cranking (Ta = 25°C)

R1524x050B

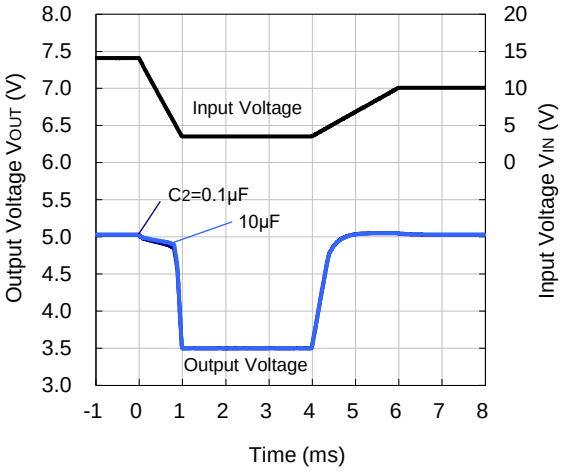

R1524x090B

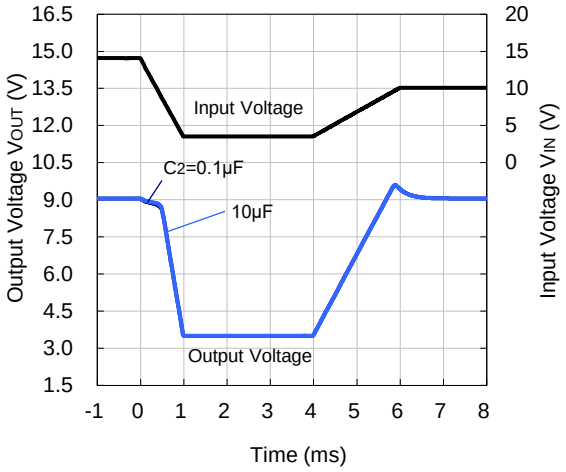

R1524x120B

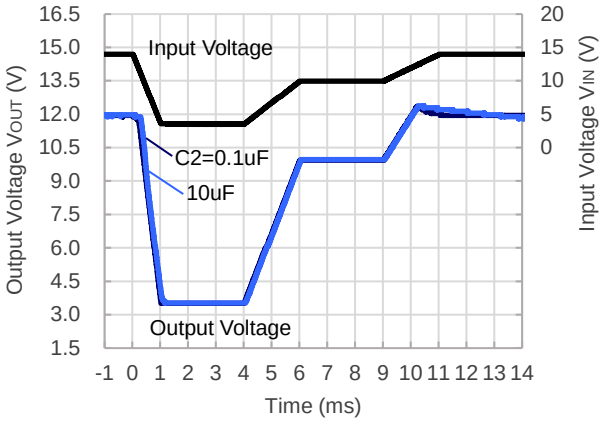

Input Transient/Load Transient vs. Output Capacity (C2)

R1524 performs a stable operation by using 0.1 µF of ceramic capacitor as the output capacitor. However, the variation of output voltage may not meet the demand of the system when input voltage and load current vary. In such cases, the variation of output voltage can be minimized significantly by using 10 µF or higher ceramic capacitor. When using an electrolytic capacitor for the output line, place the electrolytic capacitor outer side of the ceramic capacitor arranged close to the IC.

Input Transient Response

R1524x033B

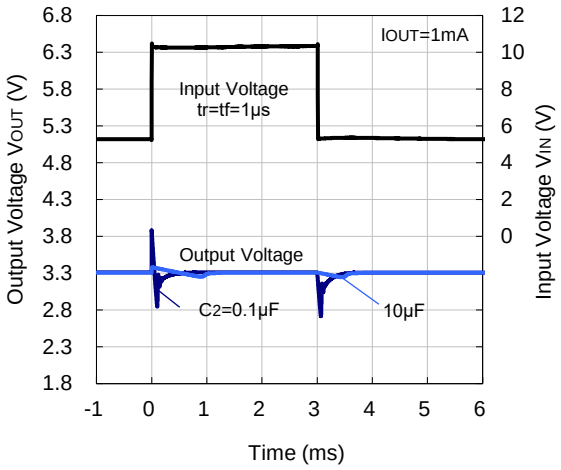

Load Transient Response

R1524x033B

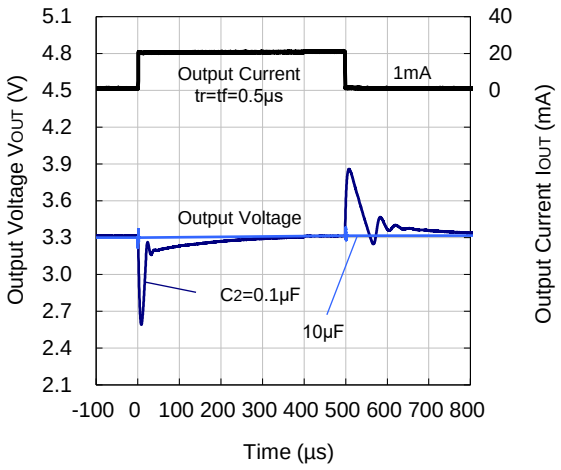

ESR vs. Output Current

It is recommended that a ceramic type capacitor be used for this device. However, other types of capacitors having lower ESR can also be used. The relation between the output current (I_{OUT}) and the ESR of output capacitor is shown below.

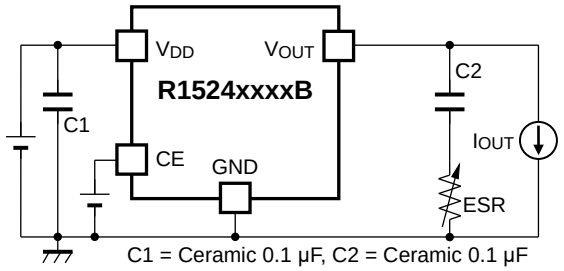

R1524x018B

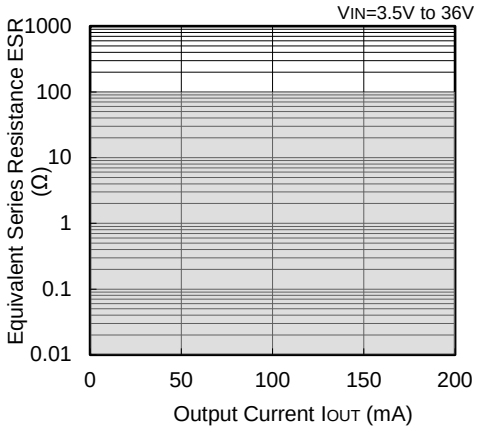

R1524x033B

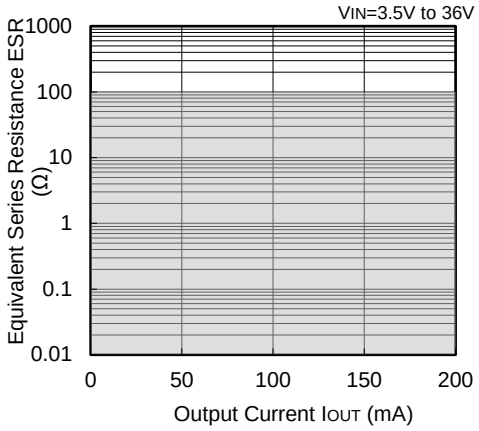

R1524x050B

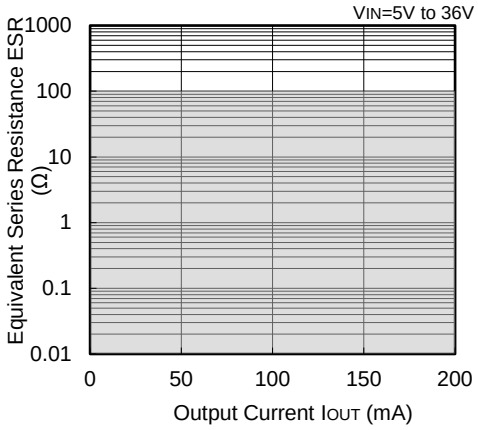

R1524x090B

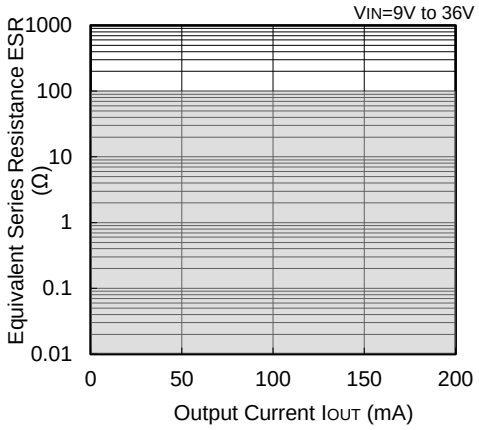

R1524x120B

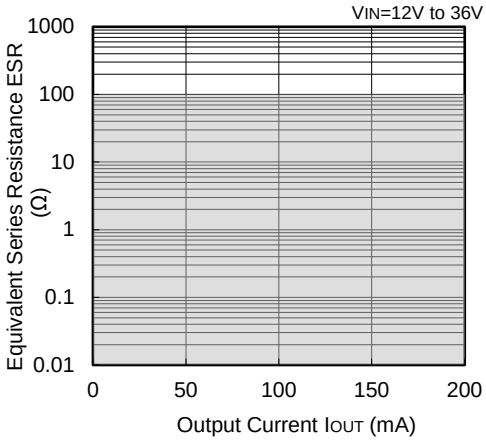

Measurement Conditions

Frequency Band: 10 Hz to 2 MHz

Measurement Temperature: −40°C to 105°C

Hatched area: Noise level is 40 μV (average) or below

Ceramic Capacitors:
C_{IN} = 0.1 μF, Murata, GRM188R71H104JA93D
C_{OUT} = 0.1 μF, TDK, CGA3E2X7R1E104K

PD-SOT-23-5-(105125150)-E-A

The power dissipation of the package is dependent on PCB material, layout, and environmental conditions. The following measurement conditions are based on JEDEC STD. 51-7.

Measurement Conditions

Item	Measurement Conditions
Environment	Mounting on Board (Wind Velocity = 0 m/s)
Board Material	Glass Cloth Epoxy Plastic (Four-Layer Board)
Board Dimensions	76.2 mm × 114.3 mm × 0.8 mm
Copper Ratio	Outer Layer (First Layer): Less than 95% of 50 mm Square Inner Layers (Second and Third Layers): Approx. 100% of 50 mm Square Outer Layer (Fourth Layer): Approx. 100% of 50 mm Square
Through-holes	ϕ 0.3 mm × 7 pcs

Measurement Result (Ta = 25°C, Tjmax = 125°C)

Item	Measurement Result
Power Dissipation	660 mW
Thermal Resistance (θja)	θja = 150°C/W
Thermal Characterization Parameter (ψjt)	ψjt = 51°C/W

θja: Junction-to-Ambient Thermal Resistance

ψjt: Junction-to-Top Thermal Characterization Parameter

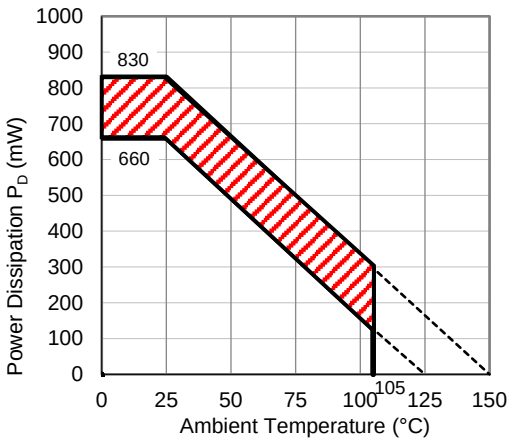

Power Dissipation vs. Ambient Temperature

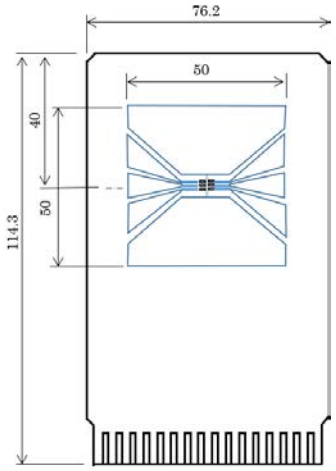

Measurement Board Pattern

The above graph shows the power dissipation of the package at Tjmax = 125°C and Tjmax = 150°C. Operating the device in the hatched range might have a negative influence on its lifetime. The total hours of use and the total years of use must be limited as follows:

Total Hours of Use	Total Years of Use (4 hours/day)
13,000 hours	9 years

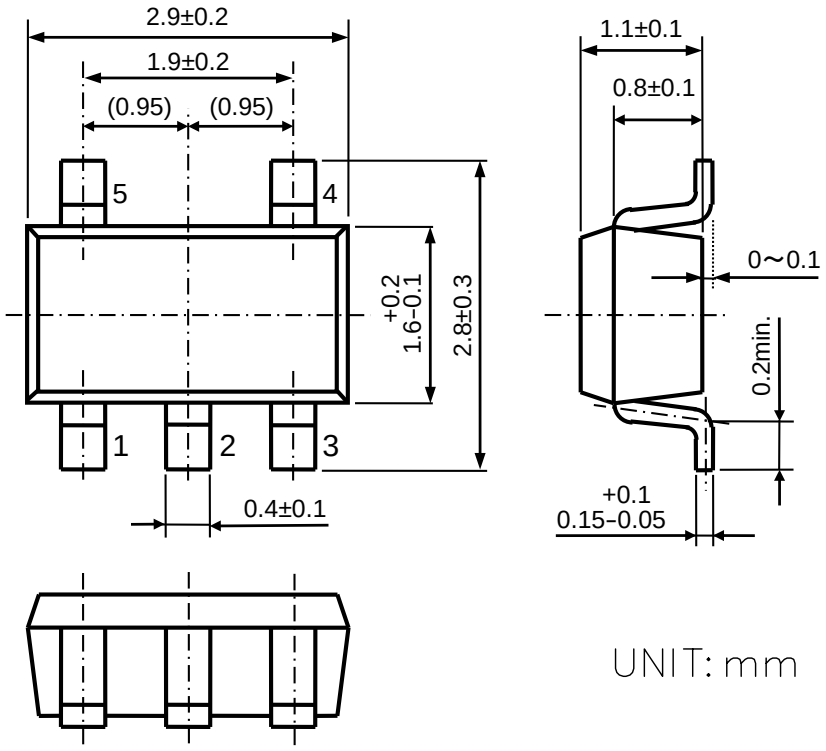

SOT-23-5 Package Dimensions

①②③: Product Code ⋯ Refer to *Part Marking List*

④⑤: Lot Number ⋯ Alphanumeric Serial Number

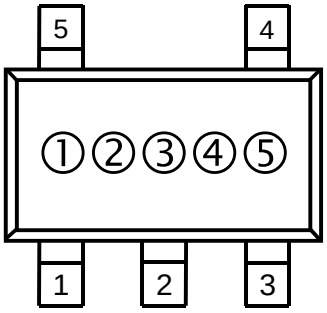

SOT-23-5 Part Markings

NOTICE
There can be variation in the marking when different AOI (Automated Optical Inspection) equipment is used. In the case of recognizing the marking characteristic with AOI, please contact our sales or our distributor before attempting to use AOI.

R1524NxxxB Part Marking List

Product Name	①	②	③	V_{SET}
R1524N018B	C	T	7	1.8 V
R1524N025B	C	T	8	2.5 V
R1524N028B	C	T	9	2.8 V
R1524N030B	C	S	0	3.0 V
R1524N033B	C	T	0	3.3 V
R1524N034B	C	T	1	3.4 V
R1524N050B	C	T	2	5.0 V
R1524N055B	C	S	1	5.5 V
R1524N060B	C	T	3	6.0 V
R1524N064B	C	S	2	6.4 V
R1524N070B	C	S	5	7.0 V
R1524N080B	C	T	4	8.0 V
R1524N085B	C	T	5	8.5 V
R1524N090B	C	T	6	9.0 V
R1524N100B	C	S	6	10.0 V
R1524N105B	C	S	7	10.5 V
R1524N110B	C	S	8	11.0 V
R1524N120B	C	S	9	12.0 V

PD-SOT-89-5-(105125150)-JE-A

The power dissipation of the package is dependent on PCB material, layout, and environmental conditions. The following measurement conditions are based on JEDEC STD. 51-7.

Measurement Conditions

Item	Measurement Conditions
Environment	Mounting on Board (Wind Velocity = 0 m/s)
Board Material	Glass Cloth Epoxy Plastic (Four-Layer Board)
Board Dimensions	76.2 mm × 114.3 mm × 0.8 mm
Copper Ratio	Outer Layer (First Layer): Less than 95% of 50 mm Square Inner Layers (Second and Third Layers): Approx. 100% of 50 mm Square Outer Layer (Fourth Layer): Approx. 100% of 50 mm Square
Through-holes	ϕ 0.3 mm × 13 pcs

Measurement Result (Ta = 25°C, Tjmax = 125°C)

Item	Measurement Result
Power Dissipation	2600 mW
Thermal Resistance (θja)	θja = 38°C/W
Thermal Characterization Parameter (ψjt)	ψjt = 13°C/W

θja: Junction-to-Ambient Thermal Resistance

ψjt: Junction-to-Top Thermal Characterization Parameter

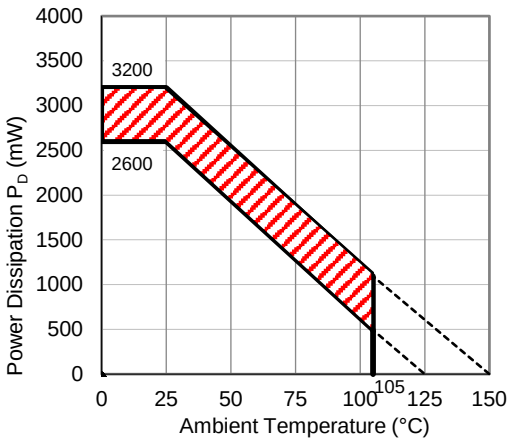

Power Dissipation vs. Ambient Temperature

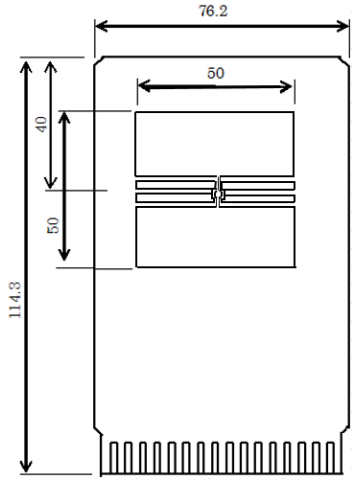

Measurement Board Pattern

The above graph shows the power dissipation of the package at Tjmax = 125°C and Tjmax = 150°C. Operating the device in the hatched range might have a negative influence on its lifetime. The total hours of use and the total years of use must be limited as follows:

Total Hours of Use	Total Years of Use (4 hours/day)
13,000 hours	9 years

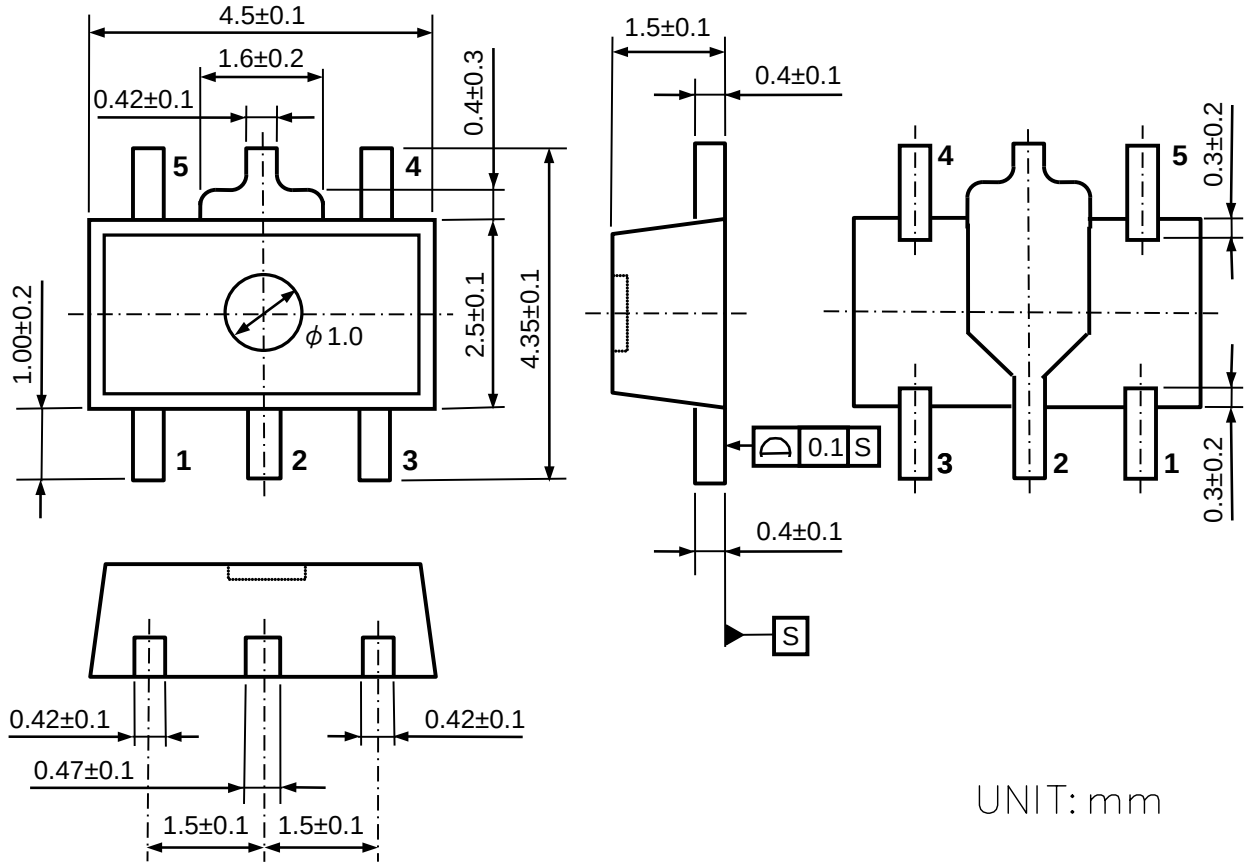

SOT-89-5 Package Dimensions

MK-R1524H-JAEA-E

①②③④: Product Code ⋯ Refer to *Part Marking List*

⑤⑥: Lot Number ⋯ Alphanumeric Serial Number

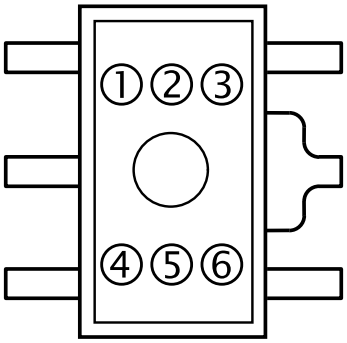

SOT-89-5 Part Markings

NOTICE
There can be variation in the marking when different AOI (Automated Optical Inspection) equipment is used. In the case of recognizing the marking characteristic with AOI, please contact our sales or our distributor before attempting to use AOI.

R1524HxxxB Part Marking List

Product Name	① ② ③	V_{SET}
R1524H018B	J 1 8 B	1.8 V
R1524H025B	J 2 5 B	2.5 V
R1524H028B	J 2 8 B	2.8 V
R1524H030B	J 3 0 B	3.0 V
R1524H033B	J 3 3 B	3.3 V
R1524H034B	J 3 4 B	3.4 V
R1524H050B	J 5 0 B	5.0 V
R1524H055B	J 5 5 B	5.5 V
R1524H060B	J 6 0 B	6.0 V
R1524H064B	J 6 4 B	6.4 V
R1524H070B	J 7 0 B	7.0 V
R1524H080B	J 8 0 B	8.0 V
R1524H085B	J 8 5 B	8.5 V
R1524H090B	J 9 0 B	9.0 V
R1524H100B	J A 0 B	10.0 V
R1524H105B	J A 5 B	10.5 V
R1524H110B	J B 0 B	11.0 V
R1524H120B	J C 0 B	12.0 V

PD-HSOP-6J-(105125150)-JE-A

The power dissipation of the package is dependent on PCB material, layout, and environmental conditions. The following measurement conditions are based on JEDEC STD. 51-7.

Measurement Conditions

Item	Measurement Conditions
Environment	Mounting on Board (Wind Velocity = 0 m/s)
Board Material	Glass Cloth Epoxy Plastic (Four-Layer Board)
Board Dimensions	76.2 mm × 114.3 mm × 0.8 mm
Copper Ratio	Outer Layer (First Layer): Less than 95% of 50 mm Square Inner Layers (Second and Third Layers): Approx. 100% of 50 mm Square Outer Layer (Fourth Layer): Approx. 100% of 50 mm Square
Through-holes	ϕ 0.3 mm × 28 pcs

Measurement Result (Ta = 25°C, Tjmax = 125°C)

Item	Measurement Result
Power Dissipation	2700 mW
Thermal Resistance (θja)	θja = 37°C/W
Thermal Characterization Parameter (ψjt)	ψjt = 7°C/W

θja: Junction-to-Ambient Thermal Resistance

ψjt: Junction-to-Top Thermal Characterization Parameter

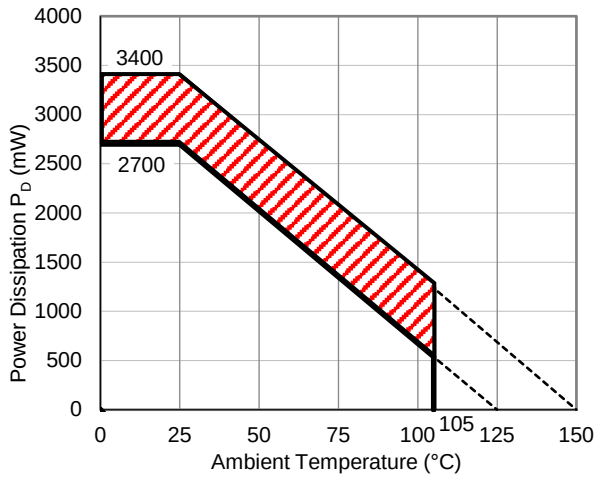

Power Dissipation vs. Ambient Temperature

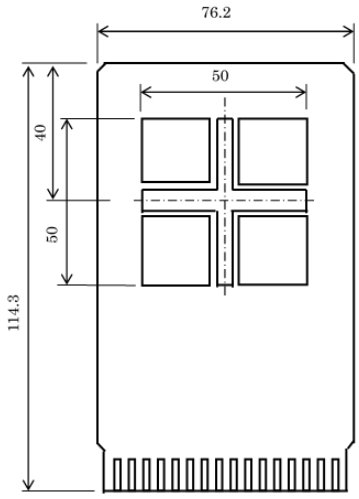

Measurement Board Pattern

The above graph shows the power dissipation of the package at Tjmax = 125°C and Tjmax = 150°C. Operating the device in the hatched range might have a negative influence on its lifetime. The total hours of use and the total years of use must be limited as follows:

Total Hours of Use	Total Years of Use (4 hours/day)
13,000 hours	9 years

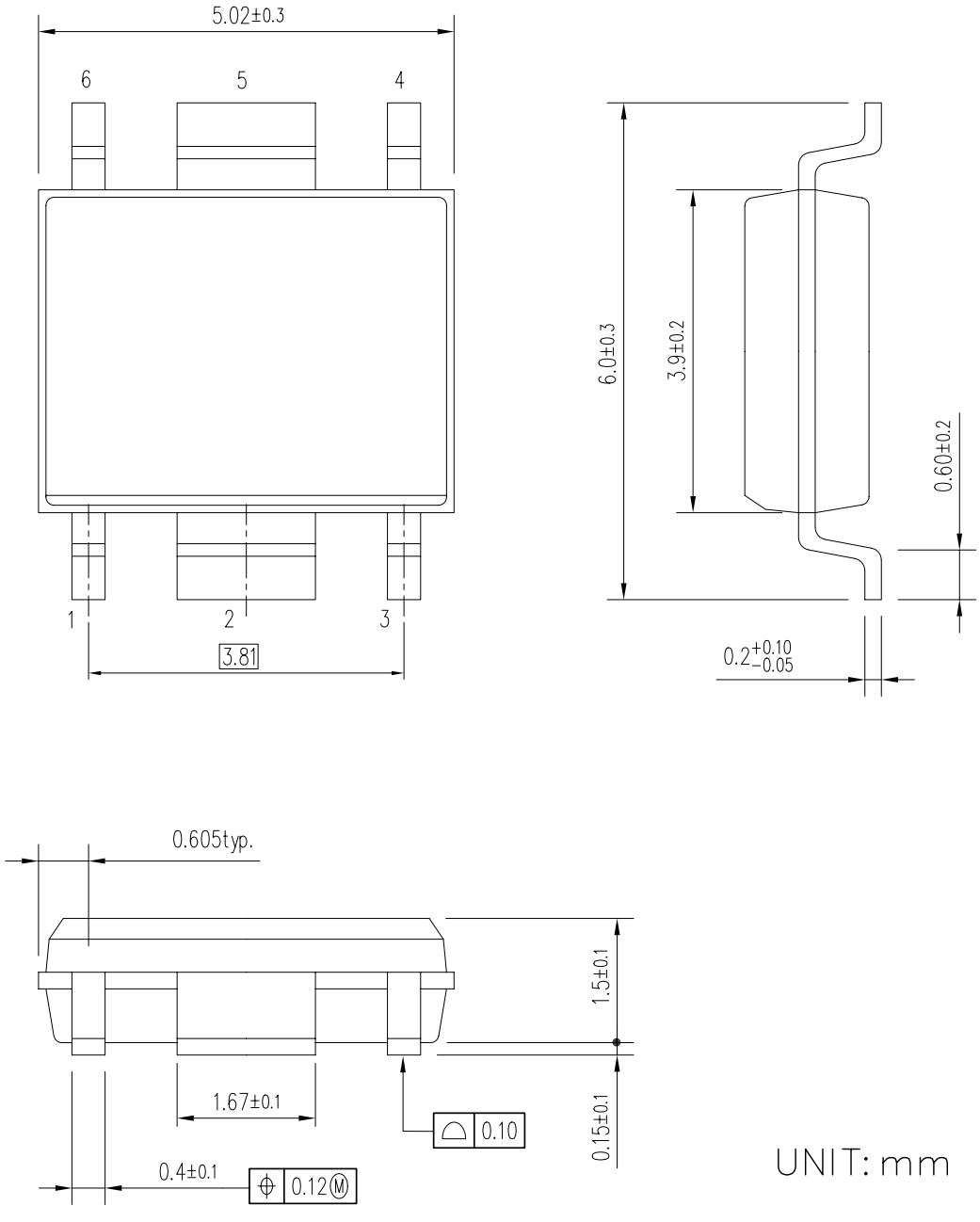

HSOP-6J Package Dimensions

①②③④: Product Code ⋯ Refer to *Part Marking List*

⑤⑥: Lot Number ⋯ Alphanumeric Serial Number

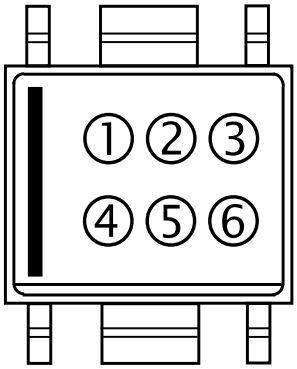

HSOP-6J Part Markings

NOTICE
There can be variation in the marking when different AOI (Automated Optical Inspection) equipment is used. In the case of recognizing the marking characteristic with AOI, please contact our sales or our distributor before attempting to use AOI.

R1524SxxxB Part Marking List

Product Name	①	②	③	④	V_{SET}
R1524S018B	A	1	8	B	1.8 V
R1524S025B	A	2	5	B	2.5 V
R1524S028B	A	2	8	B	2.8 V
R1524S030B	A	3	0	B	3.0 V
R1524S033B	A	3	3	B	3.3 V
R1524S034B	A	3	4	B	3.4 V
R1524S050B	A	5	0	B	5.0 V
R1524S055B	A	5	5	B	5.5 V
R1524S060B	A	6	0	B	6.0 V
R1524S064B	A	6	4	B	6.4 V
R1524S070B	A	7	0	B	7.0 V
R1524S080B	A	8	0	B	8.0 V
R1524S085B	A	8	5	B	8.5 V
R1524S090B	A	9	0	B	9.0 V
R1524S100B	A	A	0	B	10.0 V
R1524S105B	A	A	5	B	10.5 V
R1524S110B	A	B	0	B	11.0 V
R1524S120B	A	C	0	B	12.0 V

PD-DFN(PL)1820-6-(105125150)-JE-C

The power dissipation of the package is dependent on PCB material, layout, and environmental conditions. The following measurement conditions are based on JEDEC STD. 51.

Measurement Conditions

Item	Measurement Conditions
Environment	Mounting on Board (Wind Velocity = 0 m/s)
Board Material	Glass Cloth Epoxy Plastic (Four-Layer Board)
Board Dimensions	76.2 mm × 114.3 mm × 0.8 mm
Copper Ratio	Outer Layer (First Layer): Less than 95% of 50 mm Square Inner Layers (Second and Third Layers): Approx. 100% of 50 mm Square Outer Layer (Fourth Layer): Approx. 100% of 50 mm Square
Through-holes	ϕ 0.2 mm × 36 pcs

Measurement Result (Ta = 25°C, Tjmax = 125°C)

Item	Measurement Result
Power Dissipation	2200 mW
Thermal Resistance (θja)	θja = 45°C/W
Thermal Characterization Parameter (ψjt)	ψjt = 18°C/W

θja: Junction-to–ambient thermal resistance.

ψjt: Junction–to-top of package thermal characterization parameter.

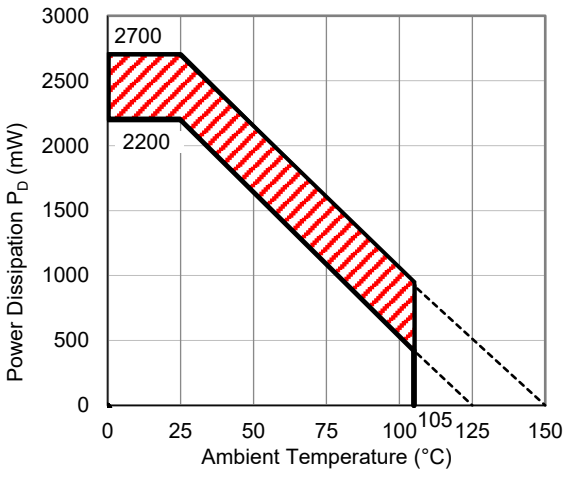

Power Dissipation vs. Ambient Temperature

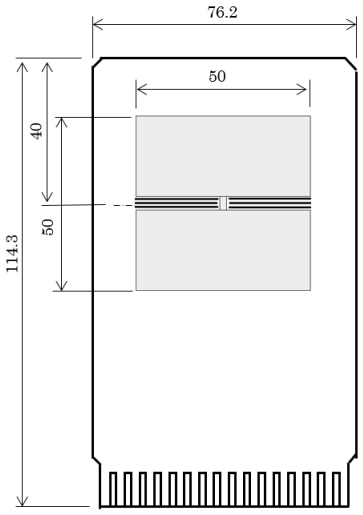

Measurement Board Pattern

The above graph shows the power dissipation of the package at Tjmax = 125°C and Tjmax = 150°C. Operating the device in the hatched range might have a negative influence on its lifetime. The total hours of use and the total years of use must be limited as follows:

Total Hours of Use	Total Years of Use (4 hours/day)
13,000 hours	9 years

DM-DFN(PL)1820-6-JE-B

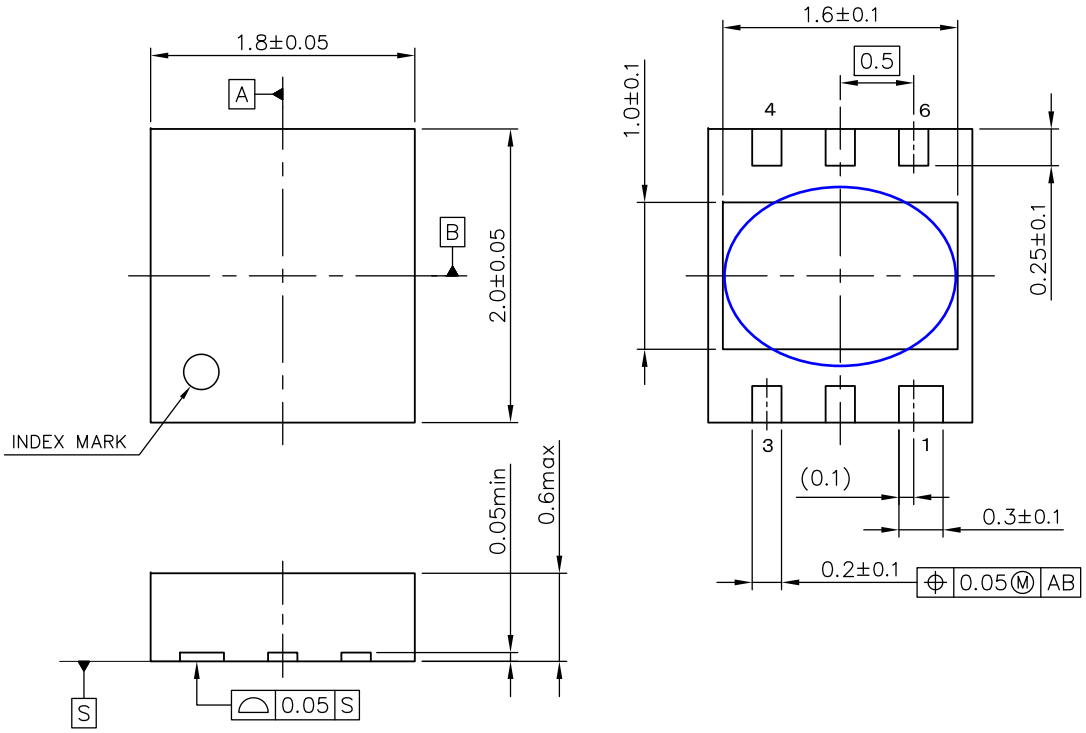

UNIT: mm

DFN(PL)1820-6 Package Dimensions

∗ The tab on the bottom of the package is substrate level (GND/V_{DD}). It is recommended that the tab be connected to the ground plane/the VDD pin on the board, or otherwise be left floating.

MK- R1524K-JAEA-D

①②③④: Product Code ⋯ Refer to *Part Marking List*

⑤⑥: Lot Number ⋯ Alphanumeric Serial Number

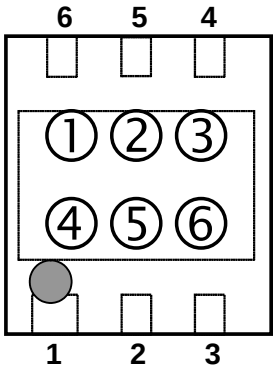

DFN(PL)1820-6 Part Markings

NOTICE
There can be variation in the marking when different AOI (Automated Optical Inspection) equipment is used. In the case of recognizing the marking characteristic with AOI, please contact our sales or our distributor before attempting to use AOI.

MK- R1524K-JAEA-D

R1524KxxxB Part Marking List

Product Name	①	②	③	④	V_{SET}
R1524K018B	F	A	1	8	1.8 V
R1524K025B	F	A	2	5	2.5 V
R1524K028B	F	A	2	8	2.8 V
R1524K030B	F	A	3	0	3.0 V
R1524K033B	F	A	3	3	3.3 V
R1524K034B	F	A	3	4	3.4 V
R1524K050B	F	A	5	0	5.0 V
R1524K055B	F	A	5	5	5.5 V
R1524K060B	F	A	6	0	6.0 V
R1524K064B	F	A	6	4	6.4 V
R1524K070B	F	A	7	0	7.0 V
R1524K080B	F	A	8	0	8.0 V
R1524K085B	F	A	8	5	8.5 V
R1524K090B	F	A	9	0	9.0 V
R1524K100B	F	A	A	0	10.0 V
R1524K105B	F	A	A	5	10.5 V
R1524K110B	F	A	B	0	11.0 V
R1524K120B	F	A	C	0	12.0 V

PD-HSOP-8E-(105125150)-JE-B

The power dissipation of the package is dependent on PCB material, layout, and environmental conditions. The following measurement conditions are based on JEDEC STD. 51-7.

Measurement Conditions

Item	Measurement Conditions
Environment	Mounting on Board (Wind Velocity = 0 m/s)
Board Material	Glass Cloth Epoxy Plastic (Four-Layer Board)
Board Dimensions	76.2 mm × 114.3 mm × 0.8 mm
Copper Ratio	Outer Layer (First Layer): Less than 95% of 50 mm Square Inner Layers (Second and Third Layers): Approx. 100% of 50 mm Square Outer Layer (Fourth Layer): Approx. 100% of 50 mm Square
Through-holes	ϕ 0.3 mm × 21 pcs

Measurement Result (Ta = 25°C, Tjmax = 125°C)

Item	Measurement Result
Power Dissipation	2900 mW
Thermal Resistance (θja)	θja = 34.5°C/W
Thermal Characterization Parameter (ψjt)	ψjt = 10 °C/W

θja: Junction-to–ambient thermal resistance.

ψjt: Junction–to-top of package thermal characterization parameter.

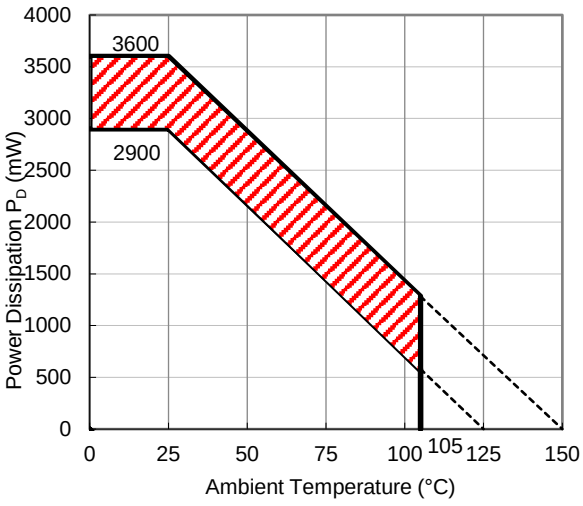

Power Dissipation vs. Ambient Temperature

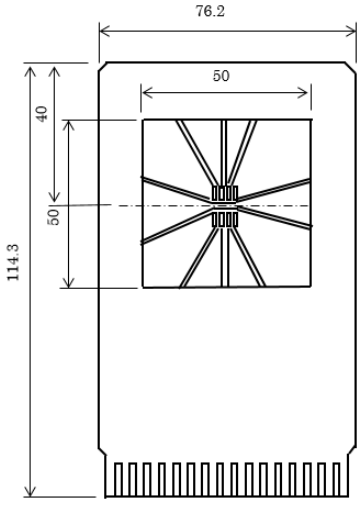

Measurement Board Pattern

The above graph shows the power dissipation of the package at Tjmax = 125°C and Tjmax = 150°C. Operating the device in the hatched range might have a negative influence on its lifetime. The total hours of use and the total years of use must be limited as follows:

Total Hours of Use	Total Years of Use (4 hours/day)
13,000 hours	9 years

DM-HSOP-8E-JE-B

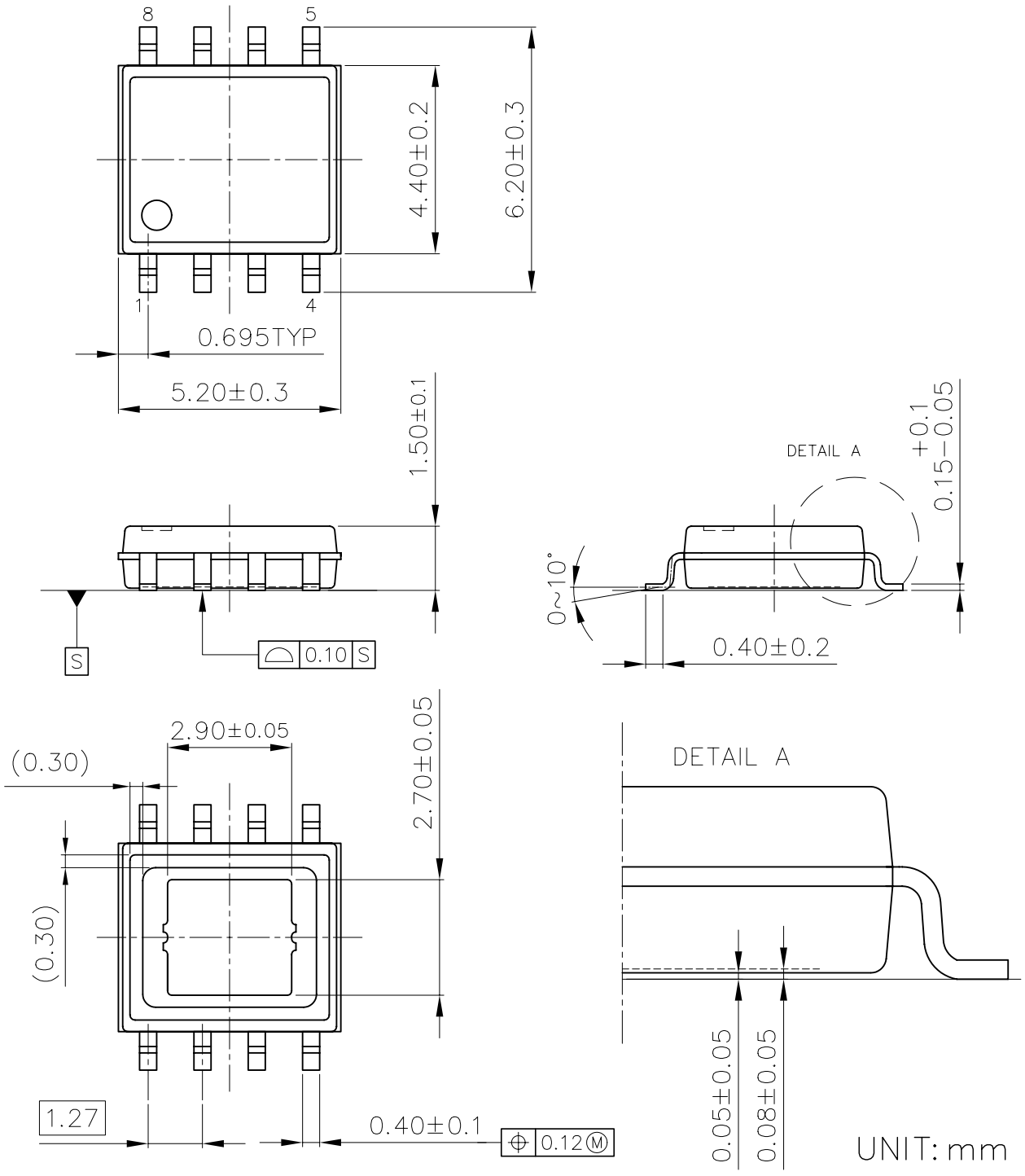

HSOP-8E Package Dimensions

①②③④⑤⑥: Product Code ⋯ Refer to *Part Marking List*

⑦⑧⑨: Lot Number ⋯ Alphanumeric Serial Number

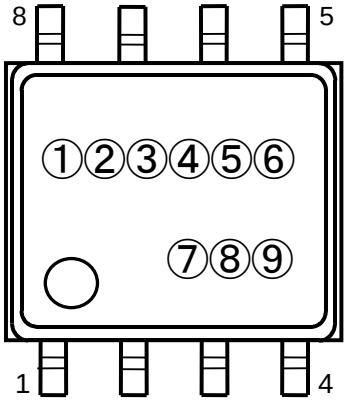

HSOP-8E Part Markings

NOTICE
There can be variation in the marking when different AOI (Automated Optical Inspection) equipment is used. In the case of recognizing the marking characteristic with AOI, please contact our sales or our distributor before attempting to use AOI.

R1524SxxxH Part Marking List

Product Name	① ② ③ ④ ⑤ ⑥	V_{SET}
R1524S018H	R S 0 1 7 A	1.8 V
R1524S025H	R S 0 1 7 B	2.5 V
R1524S028H	R S 0 1 7 C	2.8 V
R1524S030H	R S 0 1 7 D	3.0 V
R1524S033H	R S 0 1 7 E	3.3 V
R1524S034H	R S 0 1 7 F	3.4 V
R1524S050H	R S 0 1 7 H	5.0 V
R1524S055H	R S 0 1 7 J	5.5 V
R1524S060H	R S 0 1 7 K	6.0 V
R1524S064H	R S 0 1 7 L	6.4 V
R1524S070H	R S 0 1 7 S	7.0 V
R1524S080H	R S 0 1 7 M	8.0 V
R1524S085H	R S 0 1 7 N	8.5 V
R1524S090H	R S 0 1 7 P	9.0 V
R1524S100H	R S 0 1 7 T	10.0 V
R1524S105H	R S 0 1 7 U	10.5 V
R1524S110H	R S 0 1 7 V	11.0 V
R1524S120H	R S 0 1 7 W	12.0 V

1. The products and the product specifications described in this document are subject to change or discontinuation of production without notice for reasons such as improvement. Therefore, before deciding to use the products, please refer to our sales representatives for the latest information thereon.
2. The materials in this document may not be copied or otherwise reproduced in whole or in part without the prior written consent of us.
3. This product and any technical information relating thereto are subject to complementary export controls (so-called KNOW controls) under the Foreign Exchange and Foreign Trade Law, and related politics ministerial ordinance of the law. (Note that the complementary export controls are inapplicable to any application-specific products, except rockets and pilotless aircraft, that are insusceptible to design or program changes.) Accordingly, when exporting or carrying abroad this product, follow the Foreign Exchange and Foreign Trade Control Law and its related regulations with respect to the complementary export controls.
4. The technical information described in this document shows typical characteristics and example application circuits for the products. The release of such information is not to be construed as a warranty of or a grant of license under our or any third party's intellectual property rights or any other rights.
5. The products listed in this document are intended and designed for use as general electronic components in standard applications (office equipment, telecommunication equipment, measuring instruments, consumer electronic products, amusement equipment etc.). Those customers intending to use a product in an application requiring extreme quality and reliability, for example, in a highly specific application where the failure or misoperation of the product could result in human injury or death should first contact us.
    - Aerospace Equipment
    - Equipment Used in the Deep Sea
    - Power Generator Control Equipment (nuclear, steam, hydraulic, etc.)
    - Life Maintenance Medical Equipment
    - Fire Alarms / Intruder Detectors
    - Vehicle Control Equipment (automotive, airplane, railroad, ship, etc.)
    - Various Safety Devices
    - Traffic control system
    - Combustion equipment

    In case your company desires to use this product for any applications other than general electronic equipment mentioned above, make sure to contact our company in advance. Note that the important requirements mentioned in this section are not applicable to cases where operation requirements such as application conditions are confirmed by our company in writing after consultation with your company.
6. We are making our continuous effort to improve the quality and reliability of our products, but semiconductor products are likely to fail with certain probability. In order to prevent any injury to persons or damages to property resulting from such failure, customers should be careful enough to incorporate safety measures in their design, such as redundancy feature, fire containment feature and fail-safe feature. We do not assume any liability or responsibility for any loss or damage arising from misuse or inappropriate use of the products.
7. The products have been designed and tested to function within controlled environmental conditions. Do not use products under conditions that deviate from methods or applications specified in this datasheet. Failure to employ the products in the proper applications can lead to deterioration, destruction or failure of the products. We shall not be responsible for any bodily injury, fires or accident, property damage or any consequential damages resulting from misuse or misapplication of the products.
8. Quality Warranty
    8-1. Quality Warranty Period
    In the case of a product purchased through an authorized distributor or directly from us, the warranty period for this product shall be one (1) year after delivery to your company. For defective products that occurred during this period, we will take the quality warranty measures described in section 8-2. However, if there is an agreement on the warranty period in the basic transaction agreement, quality assurance agreement, delivery specifications, etc., it shall be followed.
    8-2. Quality Warranty Remedies
    When it has been proved defective due to manufacturing factors as a result of defect analysis by us, we will either deliver a substitute for the defective product or refund the purchase price of the defective product.
    Note that such delivery or refund is sole and exclusive remedies to your company for the defective product.
    8-3. Remedies after Quality Warranty Period
    With respect to any defect of this product found after the quality warranty period, the defect will be analyzed by us. On the basis of the defect analysis results, the scope and amounts of damage shall be determined by mutual agreement of both parties. Then we will deal with upper limit in Section 8-2. This provision is not intended to limit any legal rights of your company.
9. Anti-radiation design is not implemented in the products described in this document.
10. The X-ray exposure can influence functions and characteristics of the products. Confirm the product functions and characteristics in the evaluation stage.
11. WLCSP products should be used in light shielded environments. The light exposure can influence functions and characteristics of the products under operation or storage.
12. Warning for handling Gallium and Arsenic (GaAs) products (Applying to GaAs MMIC, Photo Reflector). These products use Gallium (Ga) and Arsenic (As) which are specified as poisonous chemicals by law. For the prevention of a hazard, do not burn, destroy, or process chemically to make them as gas or power. When the product is disposed of, please follow the related regulation and do not mix this with general industrial waste or household waste.
13. Please contact our sales representatives should you have any questions or comments concerning the products or the technical information.

NISSHINBO

Nisshinbo Micro Devices Inc.

Official website

https://www.nisshinbo-microdevices.co.jp/en/

Purchase information

https://www.nisshinbo-microdevices.co.jp/en/buy/

ENTEGRECİ

Bu belge www.entegreci.com üzerinden sunulmaktadır.

Elektronik komponent tedarikinde Entegreci

Entegreci, Eskişehir merkezli, Türkiye geneline satış yapan bir elektronik komponent mağazasıdır. Entegreler (IC), mikrodenetleyiciler, transistörler, diyotlar, pasif elemanlar, konnektörler, modüller ve geliştirme kartları tek adetten seri üretim adetlerine kadar satılır. Ürün sayfalarında güncel stok durumunu, fiyatı ve datasheet bağlantısını bulabilirsiniz.

Parça koduyla arama

Üretici parça numarasını yazın; stok ve fiyatı hemen görün.

www.entegreci.com

Ürün kategorileri

Entegreden kapasitöre tüm elektronik komponent kategorileri.

Kategorilere göz atın

Üreticiler

Aradığınız üreticinin ürünlerini tek sayfada inceleyin.

Üreticileri görün

Toplu alım ve teklif

Listede olmayan ya da yüksek adetli parçalar için teklif isteyin.

Teklif isteyin

www.entegreci.com | **destek@entegreci.com** | **0850 305 90 34**

Entegreci is an online electronic components store based in Türkiye. Search by manufacturer part number to see stock, prices and datasheets for integrated circuits, microcontrollers, transistors, passive components and connectors, or request a quote for parts that are not listed.

Bu sayfa Entegreci tarafından eklenmiştir. Belgenin önceki sayfaları asıl yayıncısına aittir ve içeriği değiştirilmemiştir; en güncel sürüm için belgenin yayıncısına başvurun.