High Noise Immunity 42 V Input Voltage 70 mA Voltage Tracker

NO.EA-513-200728

OVERVIEW

The R1540x is a voltage tracker featuring input voltage in the range of 3.5 V to 42 V. Highly accurate output voltage which attributes to CE/ADJ pin achieves successful sequence control of the integrated off-board sensor module. Strong enough not to require the circuit to avoid external electromagnetic interference (EMI) and this contributes space saving.

KEY BENEFITS

- Excellent noise immunity provides effective shielding against EMI.
- Lower stand-by current consumption leads to energy saving of the whole system to prolong battery life.
- Response to requirements for sequence control in the system with integrated sensors.

KEY SPECIFICATIONS

- Input Voltage Range (Maximum Rating): 3.5 V to 42.0 V (50.0 V)
- Supply Current: Typ. 60 µA
- Standby Current: Typ. 0.1 µA
- Tracking Voltage Range: 2.2 V to 14 V
- Tracking Voltage Accuracy: ± 15 mV
  (−40°C ≤ Ta ≤ 105°C, $V_{CE/ADJ}$ = 5 V)
- Output Current 70 mA
- Ripple Rejection: Typ. 80 dB (f = 100 Hz)
- Protections: Thermal Shutdown, Output Current Limiting and Short-circuit Current Limiting

PACKAGE

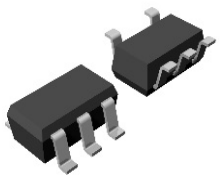

SOT-23-5
2.9 x 2.8 x 1.1 (mm)

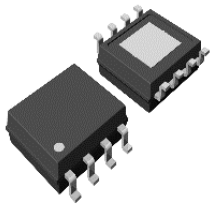

HSOP-8E
5.2 x 6.2 x 1.45 (mm)

TYPICAL APPLICATION

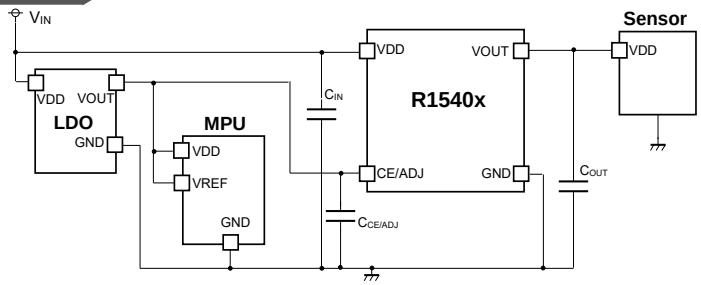

C_{IN}: 0.1uF, C_{OUT}: 10µF, $C_{CE/ADJ}$: 0.1uF, Ceramic capacitor

SELECTION GUIDE

Product Name	Package	Quantity per Reel
R1540N001B-TR-FE	SOT-23-5	3,000 pcs
R1540S001B-E2-FE	HSOP-8E	1,000 pcs

APPLICATIONS

- Off-board sensors and power supply systems for analog to digital converters (ADC)

SELECTION GUIDE

R1540x offers selectable packages corresponding to user's purpose.

Selection Guide

Product Name	Package	Quantity per Reel	Pb Free	Halogen Free
R1540N001B-TR-FE	SOT-23-5	3,000 pcs	Yes	Yes
R1540S001B-E2-FE	HSOP-8E	1,000 pcs	Yes	Yes

BLOCK DIAGRAM

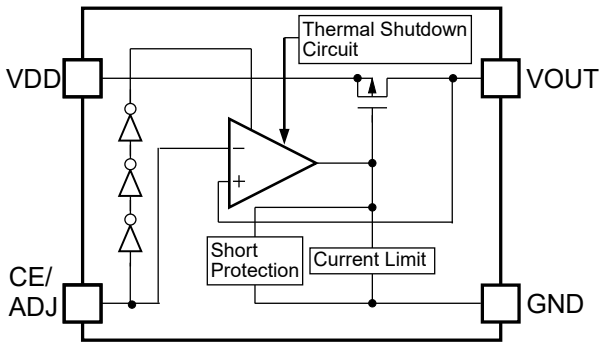

R1540x001B Block Diagram

PIN DESCRIPTIONS

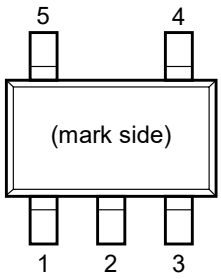

R1540N (SOT-23-5) Pin Configuration

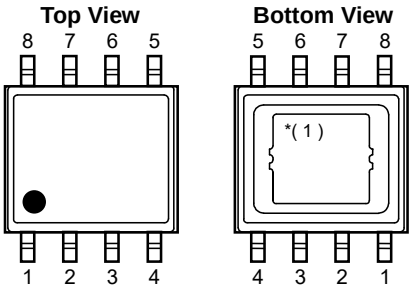

R1540S (HSOP-8E) Pin Configuration

R1540N Pin Descriptions

Pin No.	Symbol	Description
1	CE/ADJ	Chip Enable and Adjustment Pin (Active - High)
2	GND(2)	Ground Pin
3	VDD	Input Pin
4	VOUT	Output Pin
5	GND(2)	Ground Pin

R1540S Pin Descriptions

Pin No.	Symbol	Description
1	VDD	Input Pin
2	VDD	Input Pin
3	NC	No Contact
4	CE/ADJ	Chip Enable and Adjustment Pin (Active - High)
5	GND(2)	Ground Pin
6	GND(2)	Ground Pin
7	NC	No Contact
8	VOUT	Output Pin

(1) The tab on the bottom of the package is substrate potential (GND). It is recommended that this tab to be connected to the ground plane on the board.
(2) The GND pins must be wired together on the board.

INTERNAL EQUIVALENT CIRCUIT FOR EACH PIN

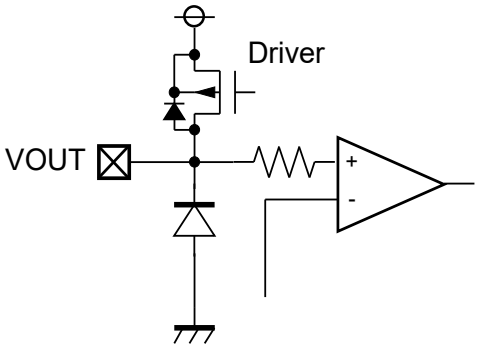

VOUT Pin Internal Equivalent Circuit Diagrams

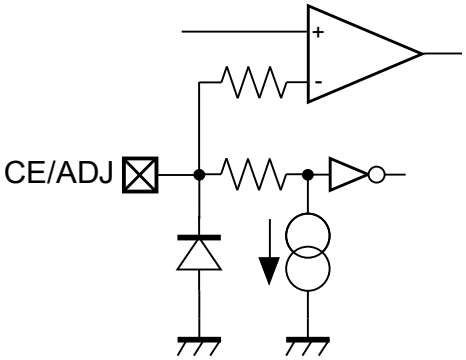

CE/ADJ Pin Internal Equivalent Circuit Diagrams

ABSOLUTE MAXIMUM RATINGS

Symbol	Parameter		Rating	Unit
V_{IN}	Input Voltage		−0.3 to 50	V
	Peak Voltage (1)		60	V
$V_{CE/ADJ}$	CE/ADJ Pin Input Voltage		−0.3 to 50	V
V_{OUT}	VOUT Pin Output Voltage		−0.3 to V_{IN} + 0.3 ≤ 50	V
I_{OUT}	Output Current		95	mA
P_D	Power Dissipation (2)	SOT-23-5	660	mW
	JEDEC STD. 51	HSOP-8E	2900	
Tj	Junction Temperature Range		−40 to 125	°C
Tstg	Storage Temperature Range		−55 to 125	°C

ABSOLUTE MAXIMUM RATINGS

Electronic and mechanical stress momentarily exceeded absolute maximum ratings may cause permanent damage and may degrade the life time and safety for both device and system using the device in the field. The functional operation at or over these absolute maximum ratings are not assured.

RECOMMENDED OPERATING CONDITIONS

Symbol	Parameter	Rating	Unit
V_{IN}	Input Voltage	3.5 to 42	V
$V_{CE/ADJ}$	CE/ADJ Input Pin Voltage	0 to 14	V
Ta	Operating Temperature Range	−40 to 105	°C

RECOMMENDED OPERATING CONDITIONS

All of electronic equipment should be designed that the mounted semiconductor devices operate within the recommended operating conditions. The semiconductor devices cannot operate normally over the recommended operating conditions, even if they are used over such ratings by momentary electronic noise or surge. And the semiconductor devices may receive serious damage when they continue to operate over the recommended operating conditions.

(1) Duration time: 200 ms.

(2) Refer to POWER DISSIPIATION for detailed information

ELECTRICAL CHARACTERISTICS

C_{IN} = 0.1 µF, C_{OUT} = 10 µF, $V_{CE/ADJ}$ = 5.0 V and V_{IN} = 14.0 V, unless otherwise noted.

The specifications surrounded by ☐ are guaranteed by design engineering at -40°C ≤ Ta ≤ 105°C.

R1540x001B Electrical Characteristics (Ta = 25°C)

Symbol	Parameter	Conditions		Min.	Typ.	Max.	Unit
I_{SS}	Supply Current	V_{IN} = 14 V, I_{OUT} = 0 mA			60	100	µA
Istandby	Standby Current	V_{IN} = 42 V, $V_{CE/ADJ}$ = 0 V			0.1	1.0	µA
ΔV_O	Tracking Voltage Accuracy	8 V ≤ V_{IN} ≤ 24 V 1 mA ≤ I_{OUT} ≤ 70 mA	$V_{CE/ADJ}$ = 5.0 V	-15		15	mV
		6 V ≤ V_{IN} ≤ 42 V 1 mA ≤ I_{OUT} ≤ 10 mA					
		V_{IN} = 15 V I_{OUT} = 1 mA	2.2 V ≤ $V_{CE/ADJ}$ ≤ 5.0 V	-15		15	mV
			5.0 V < $V_{CE/ADJ}$ ≤ 14.0 V	-18		18	
ΔV_{OUT} /ΔI_{OUT}	Load Regulation	V_{IN} = 8 V, 1 mA ≤ I_{OUT} ≤ 70 mA		-2		2	mV
ΔV_{OUT} /ΔV_{IN}	Line Regulation	6 V ≤ V_{IN} ≤ 42 V, I_{OUT} = 1 mA		-8		8	mV
ΔV_{OUT} /$\Delta V_{CE/ADJ}$	CE/ADJ Regulation	2.2 V ≤ $V_{CE/ADJ}$ ≤ 14 V, I_{OUT} = 1 mA, V_{IN} = 15 V		-1		1	mV/V
V_{DIF}	Dropout Voltage	I_{OUT} = 70 mA			1.3	2.1	V
I_{LIM}	Output Current Limit	V_{IN} = 8 V		80	120		mA
I_{SC}	Short Current Limit	V_{IN} = 8 V , V_{OUT} = 0 V		20	40		mA
$V_{CE/ADJH}$	CE/ADJ Pin Input Voltage, high	V_{IN} = 15 V		2.0		14	V
$V_{CE/ADJL}$	CE/ADJ Pin Input Voltage, low	V_{IN} = 42 V		0		1.0	V
I_{PD}	CE/ADJ Pin Pull Down Current	V_{IN} = 42 V, $V_{CE/ADJ}$ = 2 V			0.2	1.0	µA
T_{TSD}	Thermal Shutdown Detection Temperature	Junction Temperature		150	165		°C
T_{TSR}	Thermal Shutdown Released Temperature	Junction Temperature		128	135		°C

All test items listed under Electrical Characteristics are done under the pulse load condition (Tj ≈ Ta = 25°C).

TYPICAL APPLICATION

TYPICAL APPLICATION

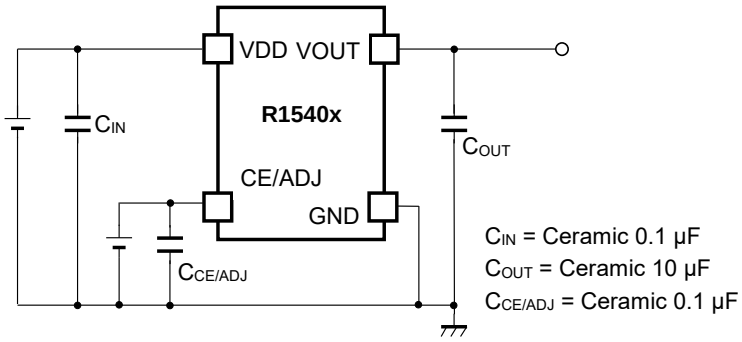

R1540x Typical Application

TECHNICAL NOTES

Phase Compensation

R1540x adopts capacitance and Equivalent Series Resistance (ESR) for phase compensation to ensure stable operation even with load varying current. For this end, the capacitor of 10 µF or more is essential. A certain amount of ESR may cause unstable output voltage. Fully take temperature and frequency characteristics into consideration when evaluating the circuit. Place the capacitor of 0.1 µF or more between VDD and GND with using short leads and short printed circuit traces.

PCB Layout

SOT-23-5 package: connect Nos. 2 and 5 of GND pin together.
HSOP-8E package: connect Nos. 5 and 6 of GND pin together.

ESR vs. output current characteristics

Using ceramic output capacitor is highly recommended although availability of another low-ESR capacitors. The mutual relations between the output current (I_{OUT}) causes noise under the specified value and the ESR are indicated below for reference.

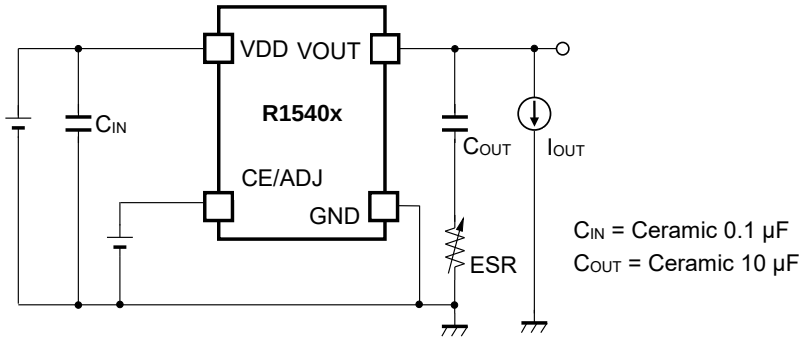

Measurement Conditions

Frequency Band: 10 Hz to 2 MHz

Temperature: −40°C to 105°C

Shaded portion: Noise level is 40 µV (average) or below

Capacitors: C_{IN} = 0.1 µF of Ceramic, C_{OUT} = 10 µF of Ceramic

R1540x001B

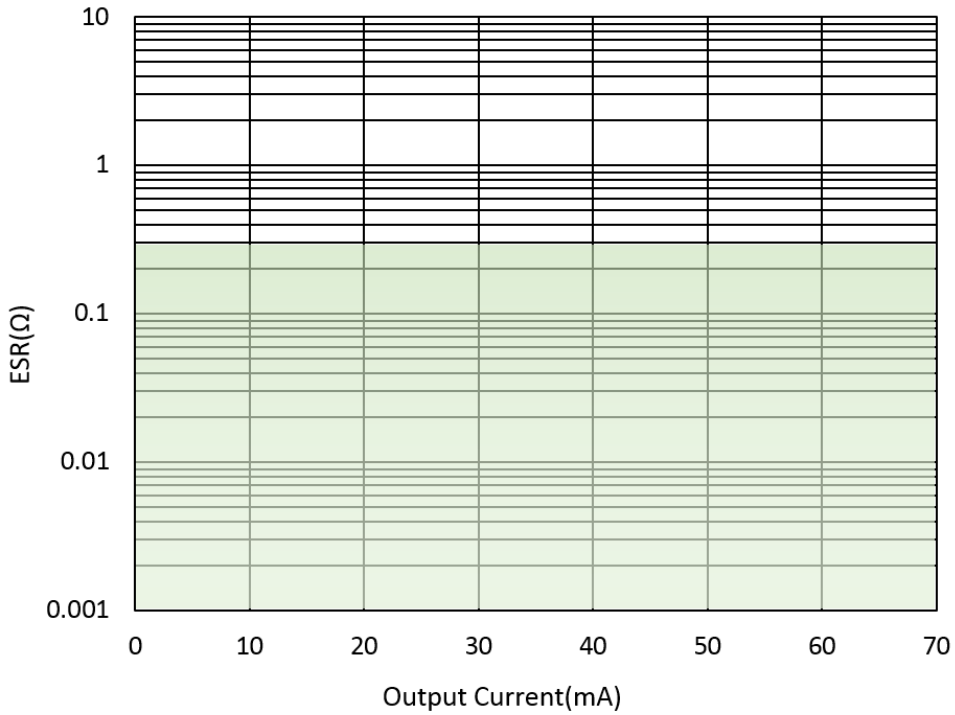

THEORY OF OPERATION

Thermal Shutdown

Thermal Shutdown occurs when the device's junction temperature reaches 165°C (Typ.) at which point the regulator will automatically shut down. Then the regulator resumes from the stand-by state when the junction temperature decreases below 135°C (Typ.). Unless the cause of overheating is eliminated, the device cycles on and off to generate pulse output.

APPLICATION INFORMATION

Typical Application for IC Chip Breakdown Prevention

A sudden surge of current flowing through the VOUT pin during a short to GND leads to negative voltage due to resonance generated between the impedance of the wire and the output capacitor, C2. Consequently, large short-circuit current may destroy the IC or a load device in some types of pattern boards. It is highly recommended to connect schottky diode, D1, between VOUT pin and GND to prevent the IC from being destroyed.

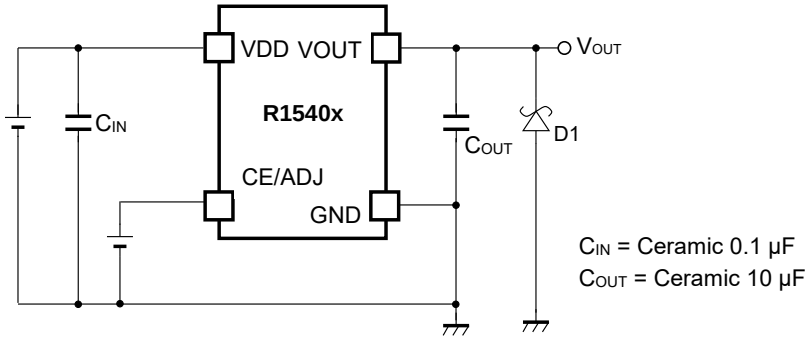

R1540x Typical Application for IC Chip Breakdown Prevention

Electromagnetic Noise Immunity

An output voltage may linearly varies in some regulators due to electromagnetic noise. R1540x adopts the techniques on its circuits to prevent this voltage variation. The noise immunity test indicated below was conducted to confirm that R1540x is fairly robust to electromagnetic noise over a broad frequency band.

DC power supply：apply V_{IN} = 14 V, $V_{CE/ADJ}$ = 5 V
Digital multi meter：measure the output DC voltage of R1540
Signal generator：apply high frequency signal of 150 kHz to1 GHz
Power meter：measure the intensity of signal so as to sense the surface electric field intensity of 800 V/m

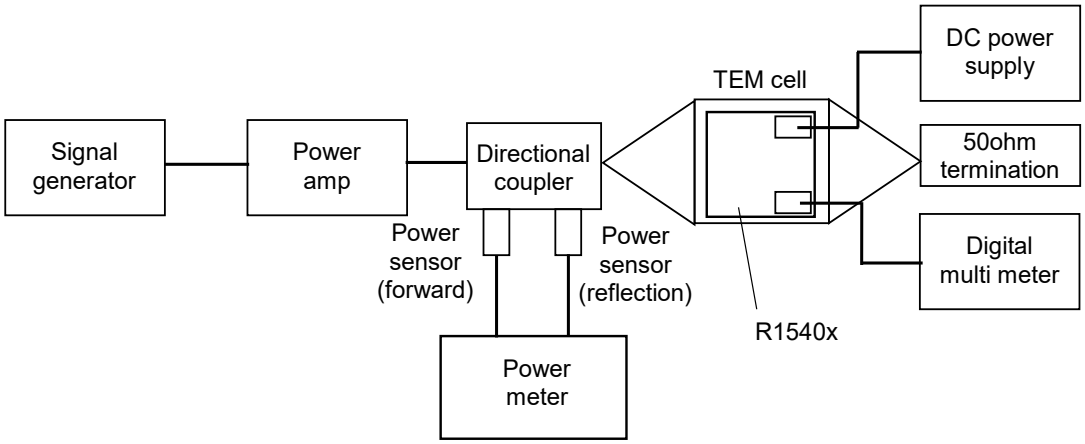

Block Diagram for Immunity Test Based on IEC 62132-2 TEM cell

EMS Characteristics (TEMcell Applied：800 V/m)
V_{IN} = 14 V, $V_{CE/ADJ}$ = 5 V,
Surface Electric Field Intensity = 800 V/m

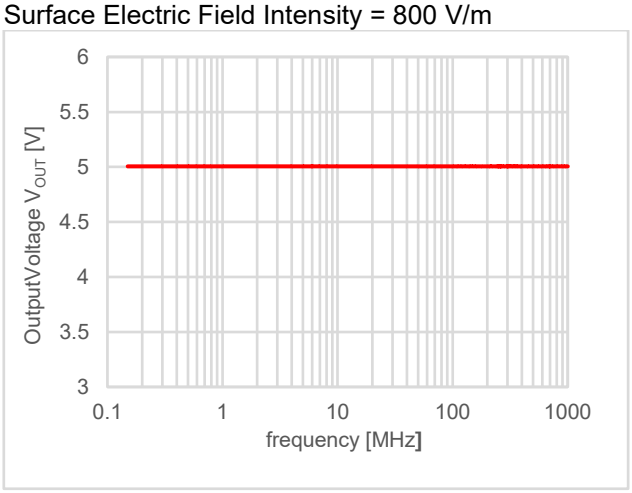

TYPICAL CHARACTERISTICS

Typical Characteristics are intended to be used as reference data, they are not guaranteed

1) Output voltage vs Output Current

C_{IN} = Ceramic 0.1 µF, C_{OUT} = Ceramic 10 µF, Ta = 25°C

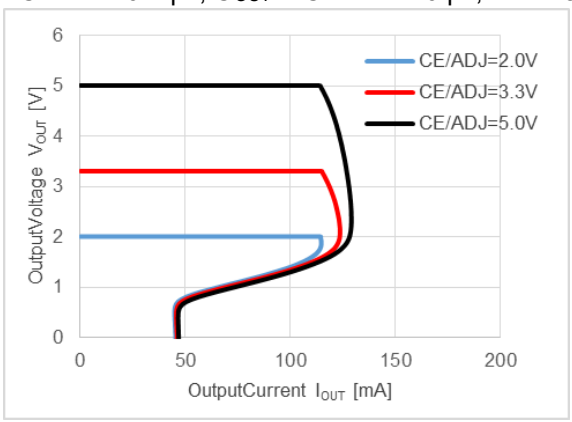

2) Output voltage vs Input Voltage

C_{IN} = Ceramic 0.1 µF, C_{OUT} = Ceramic 10 µF , Ta=25°C

V_{IN} = 0 V,<=>42 V, $V_{CE/ADJ}$ = 5 V

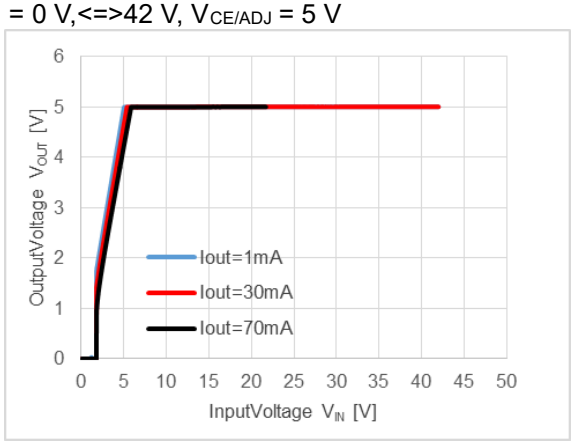

V_{IN} = 0 V,<=> 8 V, $V_{CE/ADJ}$ = 5 V

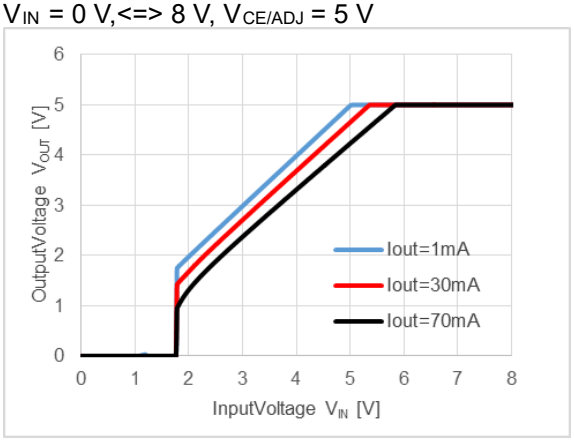

3) Supply Current vs Input Voltage

C_{IN} = Ceramic 0.1 µF, C_{OUT} = Ceramic 10 µF , Ta = 25°C

V_{IN} = 0 V <=>42 V, $V_{CE/ADJ}$ = 5 V, I_{OUT} = 0 mA

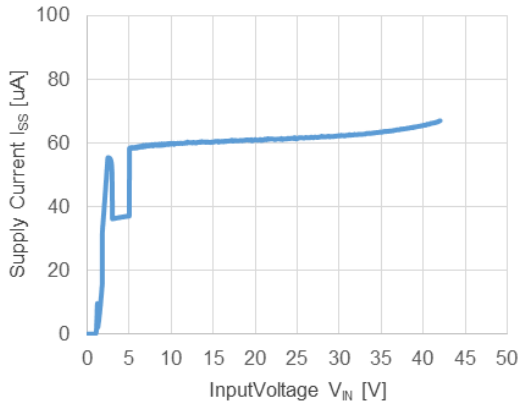

4) Supply Current vs Temperature
C_{IN} = Ceramic 0.1 µF, C_{OUT} = Ceramic 10 µF
V_{IN} = 14 V, $V_{CE/ADJ}$ = 5 V, I_{OUT} = 0 mA

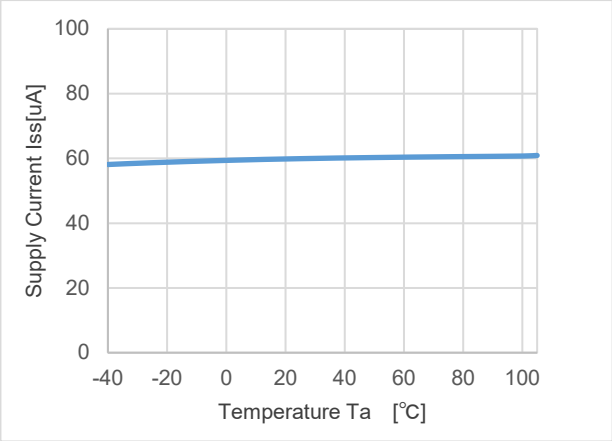

5) Tracking Accuracy vs Temperature
C_{IN} = Ceramic 0.1 µF, C_{OUT} = Ceramic 10 µF
V_{IN} = 14 V, $V_{CE/ADJ}$ = 5 V, I_{OUT} = 1 mA

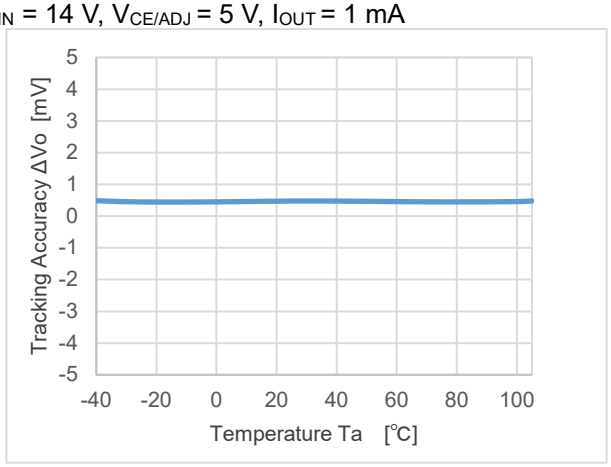

6) Tracking Accuracy vs Input Voltage
C_{IN} = Ceramic 0.1 µF, C_{OUT} = Ceramic 10 µF, Ta=25°C
$V_{CE/ADJ}$ = 2 V, V_{IN} = 3 V <=> 42 V

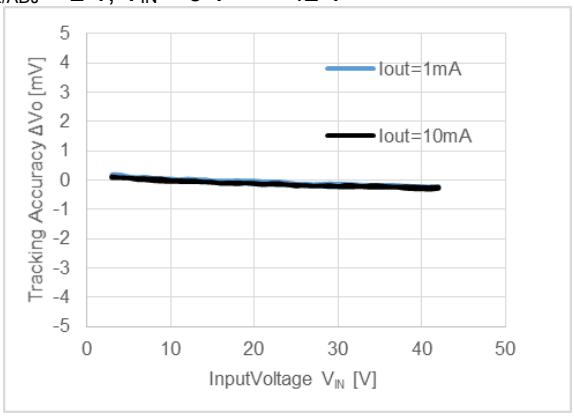

$V_{CE/ADJ}$ = 5 V, V_{IN} = 6 V <=> 42 V

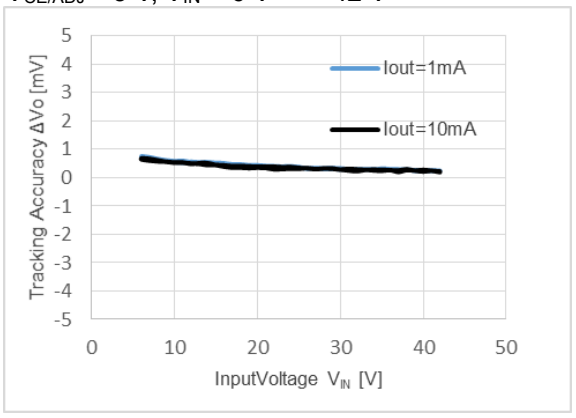

7) Tracking Accuracy vs Load Current
C_{IN} = Ceramic 0.1 µF, C_{OUT} = Ceramic 10 µF, Ta = 25°C
$V_{CE/ADJ}$ = 2 V, I_{OUT} = 1mA <=> 70 mA

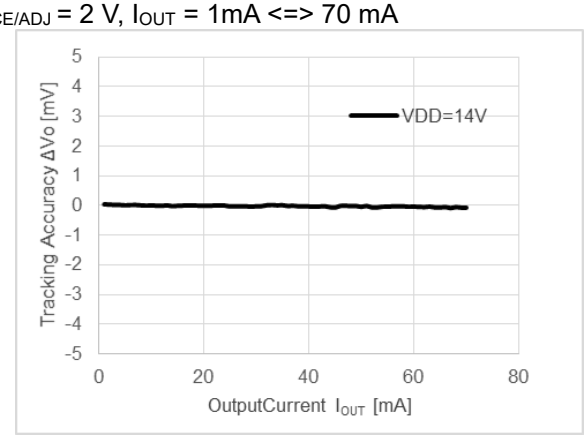

$V_{CE/ADJ}$ = 5 V, I_{OUT} = 1mA <=> 70 mA

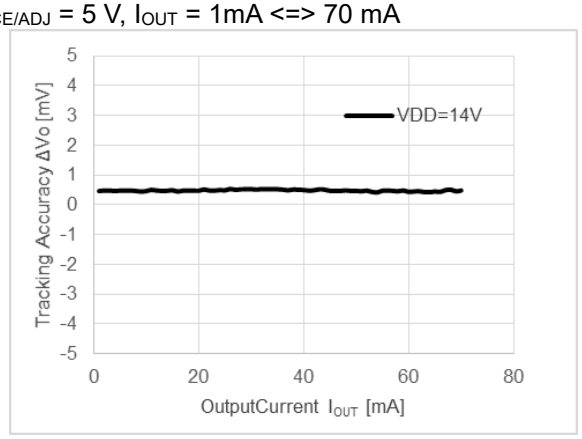

8) Tracking Accuracy vs CE/ADJ Voltage
C_{IN} = Ceramic 0.1 µF, C_{OUT} = Ceramic 10 µF, Ta = 25°C
V_{IN} = 15 V, $V_{CE/ADJ}$ = 2.4 V <=> 14 V, I_{OUT} = 1 mA

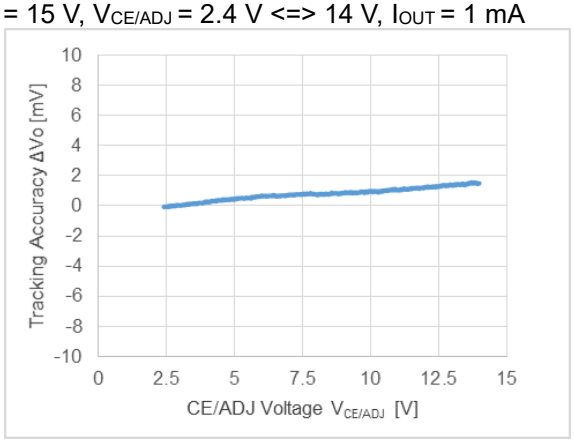

9) Dropout Voltage vs Output Current
C_{IN} = Ceramic 0.1 µF, C_{OUT} = Ceramic 10 µF, Ta=25°C
V_{IN} = 0 V <=> 22 V, $V_{CE/ADJ}$ = 5 V

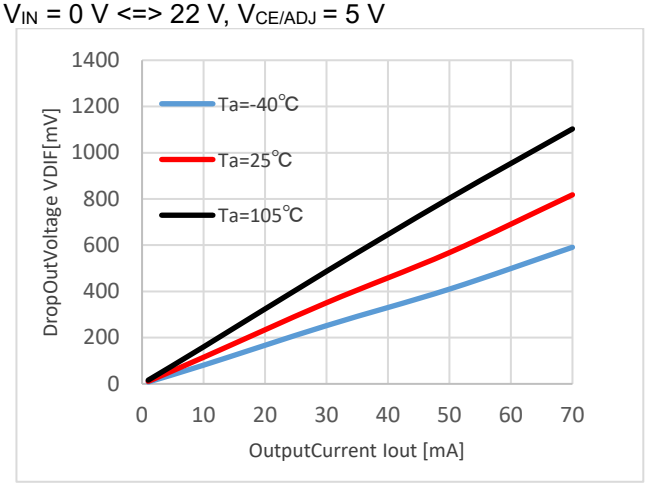

10) Dropout Voltage vs CE/ADJ Voltage
C_{IN} = Ceramic 0.1 µF, C_{OUT} = Ceramic 10 µF, Ta=25°C
V_{IN} = 0 V <=>22 V, I_{OUT}=70 mA

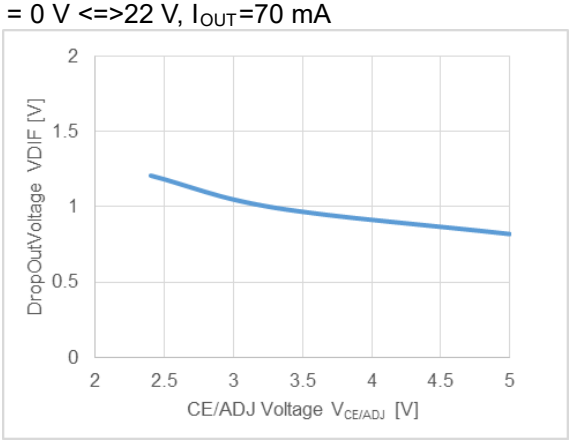

11) Equivalent Series Resistance vs Output Current
C_{IN} = Ceramic 0.1 µF, C_{OUT} = Ceramic 10µF, Ta=25°C
V_{IN} = 4 V <=> 42 V, $V_{CE/ADJ}$ = 2 V
Ta =-40°C / 25°C / 105°C

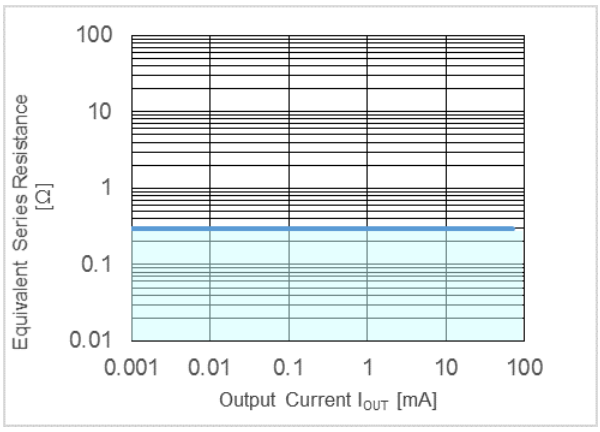

V_{IN} = 7 V <=> 42 V, $V_{CE/ADJ}$ = 5 V
Ta=-40°C / 25°C / 105°C

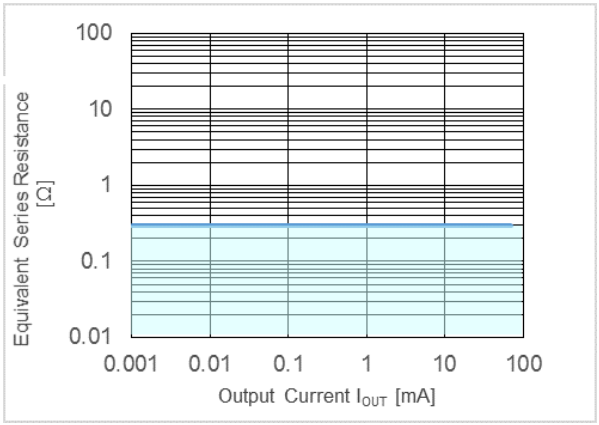

12) Ripple Rejection vs Input Voltage
C_{IN} = none, C_{OUT} = Ceramic 10 µF, Ta = 25°C
V_{IN} = 5 V <=> 15 V, $V_{CE/ADJ}$ = 5 V

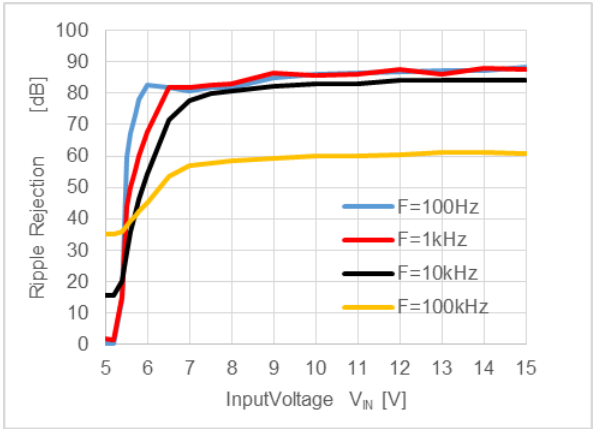

13) Ripple Rejection vs Frequency
C_{IN} = none, C_{OUT} = Ceramic 10 µF, Ta = 25°C
V_{IN} = 14 V, $V_{CE/ADJ}$ = 2 V

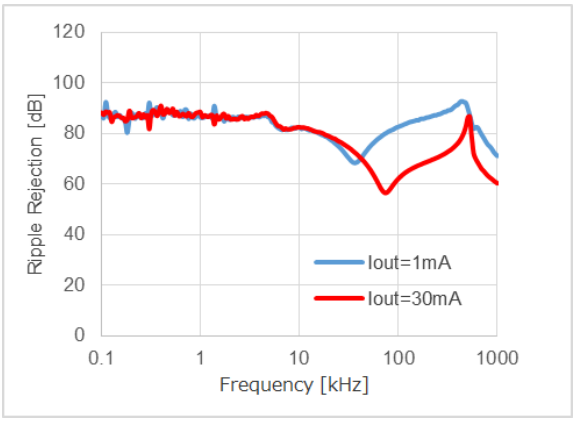

14) Load Transient Response
C_{IN} = Ceramic 0.1 µF, C_{OUT} = Ceramic 10 µF, Ta = 25°C
V_{IN}=14 V, I_{OUT} = 1 mA <=> 50 mA, tR = tF = 1us

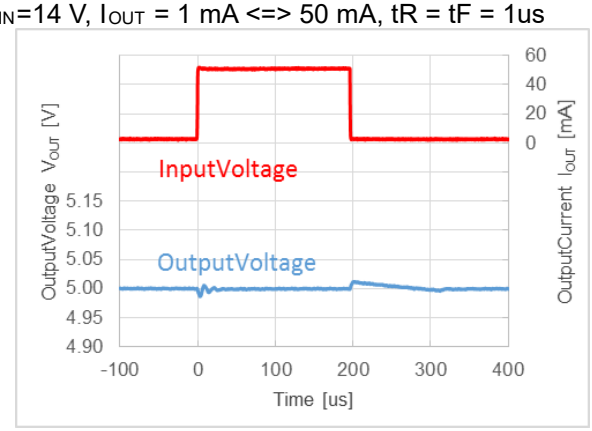

15) Input Transient Response
C_{IN} = none, C_{OUT} = Ceramic 10 µF, Ta = 25°C

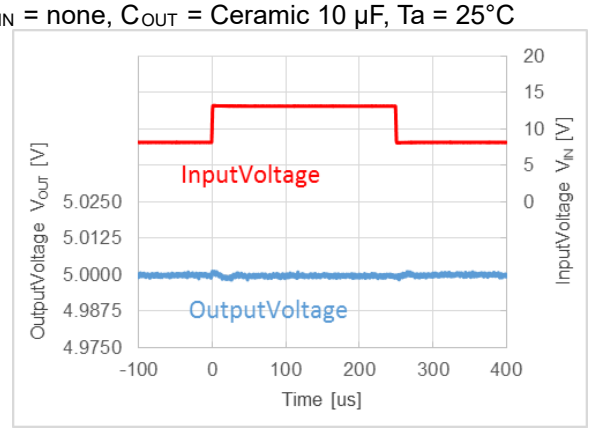

16) Turn-on Speed with CE/ADJ pin
C_{IN} = Ceramic 0.1 µF, C_{OUT} = Ceramic 10 µF, Ta = 25°C
V_{IN}=14 V, $V_{CE/ADJ}$ = 0 V => 5 V

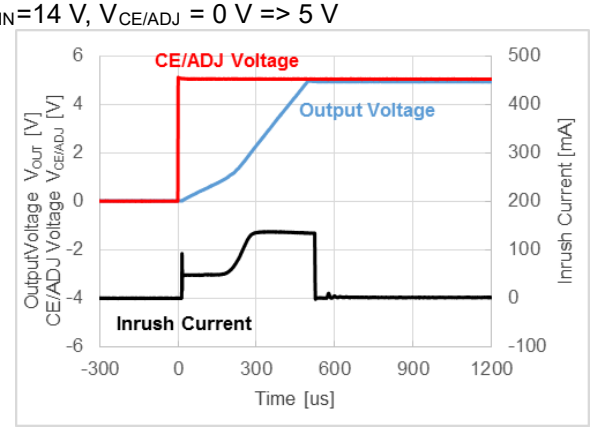

17) Turn-off Speed with CE/ADJ pin
C_{IN} = Ceramic 0.1 µF, C_{OUT} = Ceramic 10µF, Ta = 25°C
V_{IN}=14 V, $V_{CE/ADJ}$ = 5 V => 0 V

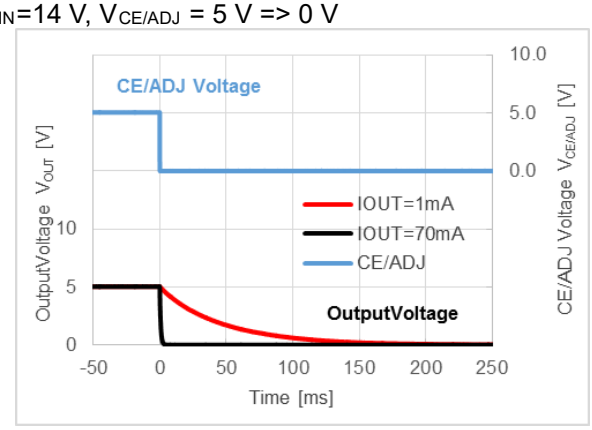

18) CE/ADJ Excess/Inrush Current
C_{IN} = none, C_{OUT} = Ceramic 10µF, Ta = 25°C
V_{IN} = 8 V, $V_{CE/ADJ}$ = 2.4 V => 5 V

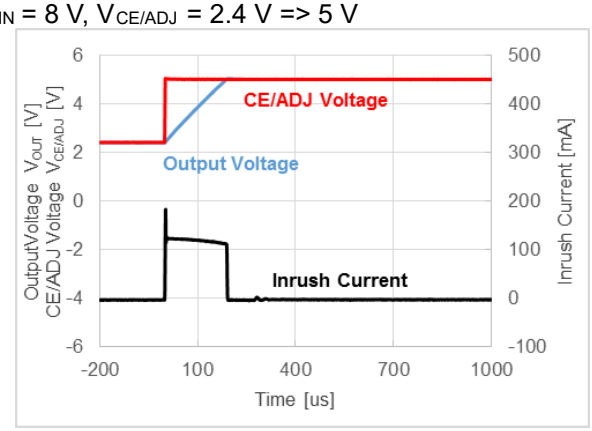

V_{IN} = 8 V, $V_{CE/ADJ}$ = 5 V=> 2.4 V

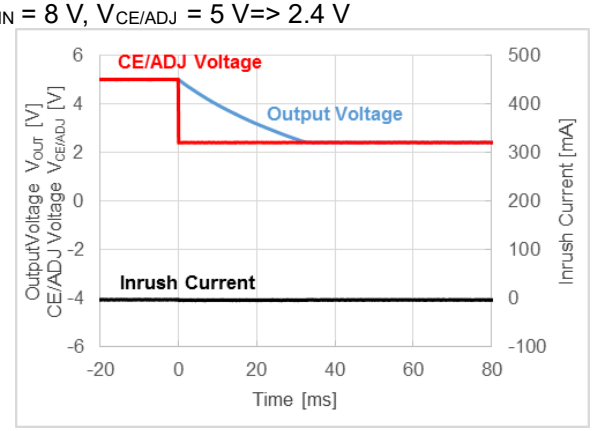

19) Load Dump

C_{IN} = Ceramic 0.1 µF, C_{OUT} = Ceramic 10 µF, Ta = 25°C

$V_{CE/ADJ}$ = 5 V

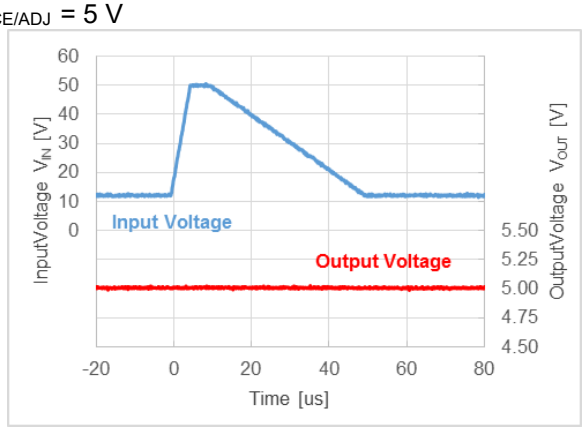

20) Cranking

C_{IN} = Ceramic 0.1 µF, C_{OUT} = Ceramic 10 µF, Ta = 25°C

$V_{CE/ADJ}$ = 5 V, I_{OUT} = 1 mA

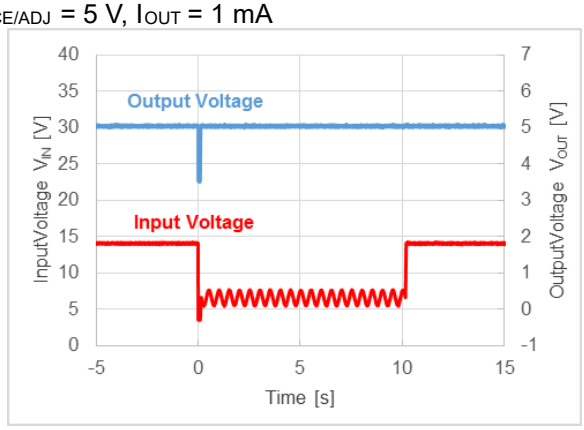

$V_{CE/ADJ}$ = 5 V, I_{OUT} = 50 mA

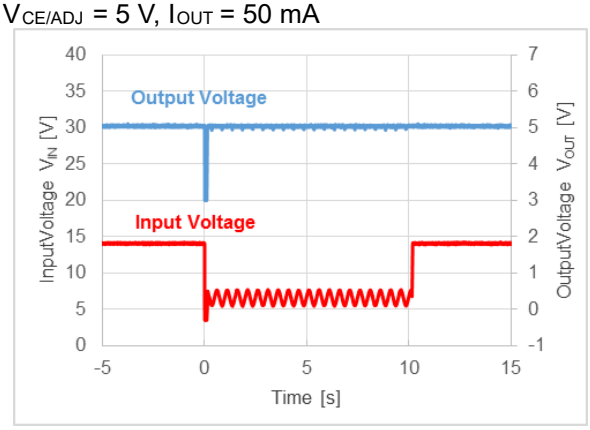

$V_{CE/ADJ}$ = 5 V, I_{OUT} = 1 mA

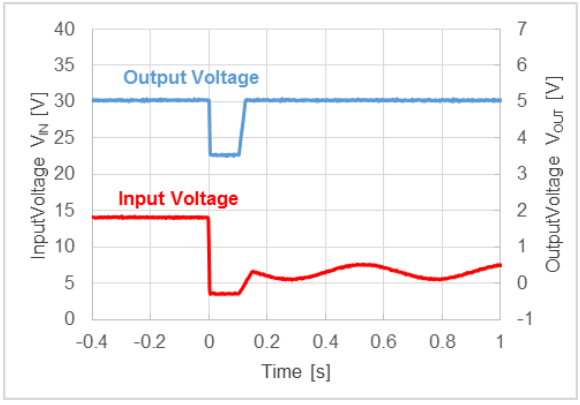

$V_{CE/ADJ}$ = 5 V, I_{OUT} = 50 mA

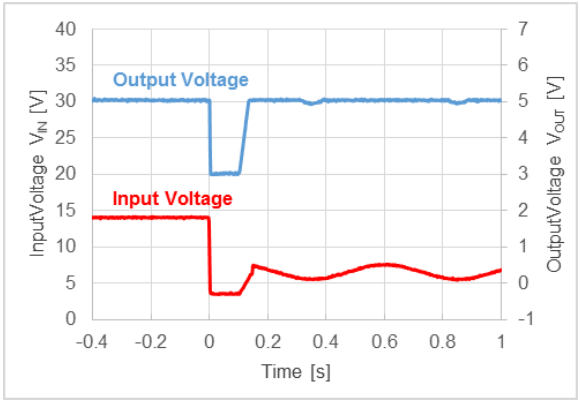

Test Circuit

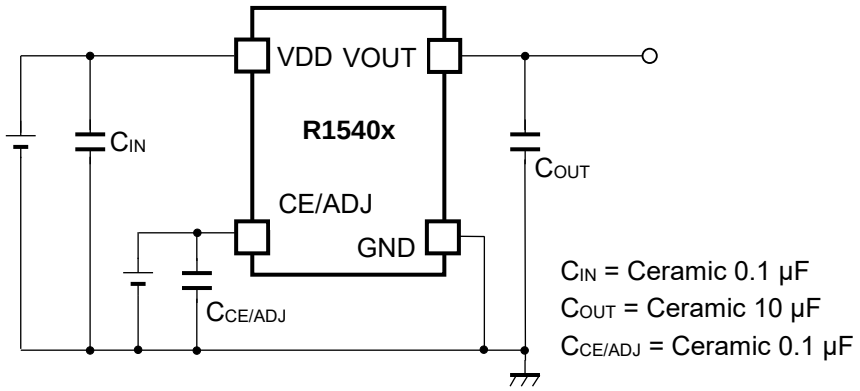

R1540x circuit for measuring Typical Characteristics

Measurement Components of Typical Characteristics

Symbol	Capacitance	Measurement item	Manufacturer	Parts number
C_{IN}	0.1 µF	All	TDK	CGA4J2X7R2A104K125AA
C_{OUT}	10 µF	All	TDK	CGA6P1X7R1E106K

Ver. A

The power dissipation of the package is dependent on PCB material, layout, and environmental conditions. The following measurement conditions are based on JEDEC STD. 51-7.

Measurement Conditions

Item	Measurement Conditions
Environment	Mounting on Board (Wind Velocity = 0 m/s)
Board Material	Glass Cloth Epoxy Plastic (Four-Layer Board)
Board Dimensions	76.2 mm × 114.3 mm × 0.8 mm
Copper Ratio	Outer Layer (First Layer): Less than 95% of 50 mm Square Inner Layers (Second and Third Layers): Approx. 100% of 50 mm Square Outer Layer (Fourth Layer): Approx. 100% of 50 mm Square
Through-holes	ϕ 0.3 mm × 7 pcs

Measurement Result (Ta = 25°C, Tjmax = 125°C)

Item	Measurement Result
Power Dissipation	660 mW
Thermal Resistance (θja)	θja = 150°C/W
Thermal Characterization Parameter (ψjt)	ψjt = 51°C/W

θja: Junction-to-Ambient Thermal Resistance

ψjt: Junction-to-Top Thermal Characterization Parameter

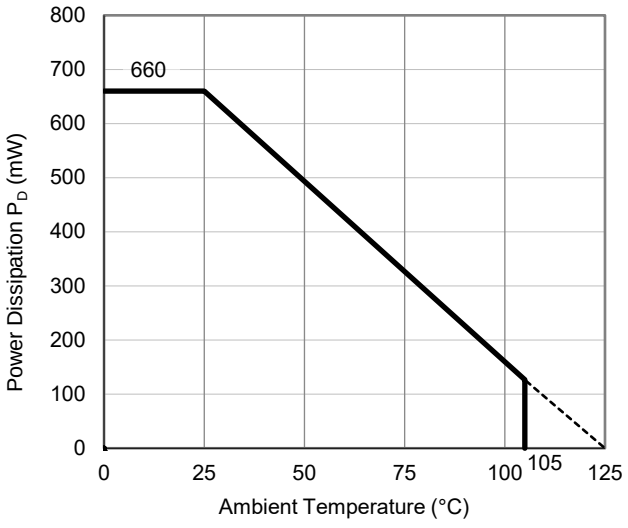

Power Dissipation vs. Ambient Temperature

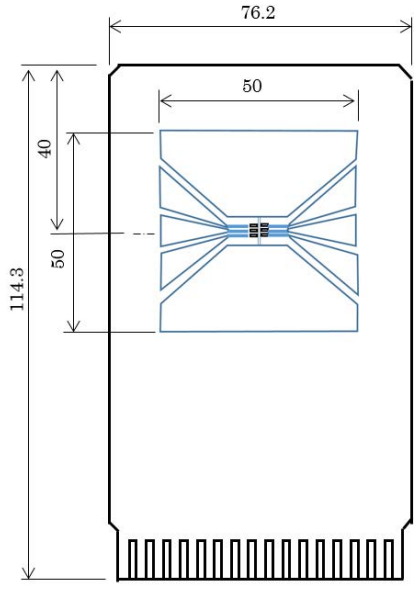

Measurement Board Pattern

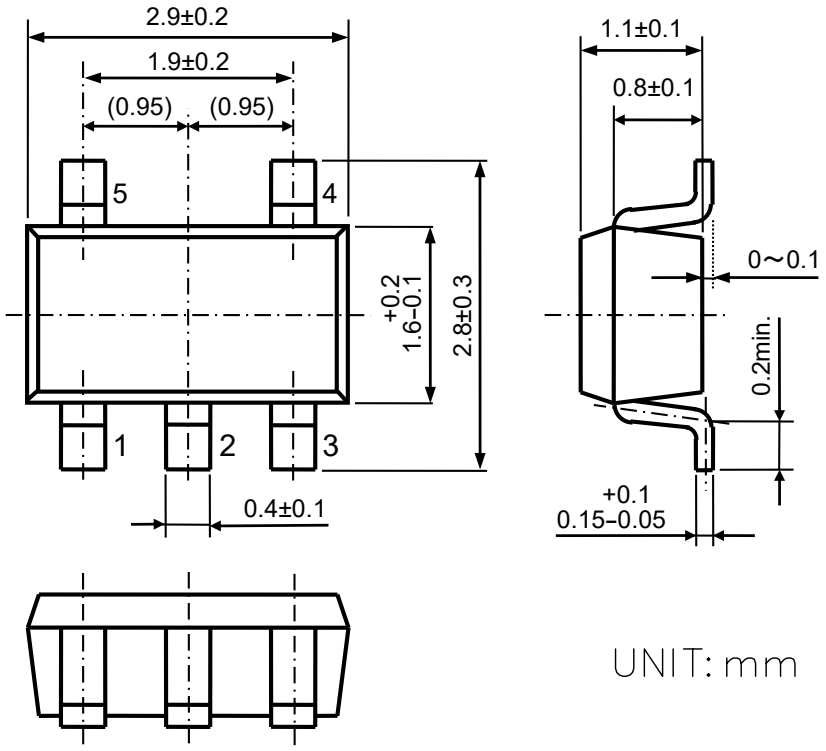

SOT-23-5 Package Dimensions

Ver. A

The power dissipation of the package is dependent on PCB material, layout, and environmental conditions. The following measurement conditions are based on JEDEC STD. 51-7.

Measurement Conditions

Item	Measurement Conditions
Environment	Mounting on Board (Wind Velocity = 0 m/s)
Board Material	Glass Cloth Epoxy Plastic (Four-Layer Board)
Board Dimensions	76.2 mm × 114.3 mm × 0.8 mm
Copper Ratio	Outer Layer (First Layer): Less than 95% of 50 mm Square Inner Layers (Second and Third Layers): Approx. 100% of 50 mm Square Outer Layer (Fourth Layer): Approx. 100% of 50 mm Square
Through-holes	ϕ 0.3 mm × 21 pcs

Measurement Result (Ta = 25°C, Tjmax = 125°C)

Item	Measurement Result
Power Dissipation	2900 mW
Thermal Resistance (θja)	θja = 34.5°C/W
Thermal Characterization Parameter (ψjt)	ψjt = 10°C/W

θja: Junction-to–ambient thermal resistance.

ψjt: Junction–to-top of package thermal characterization parameter

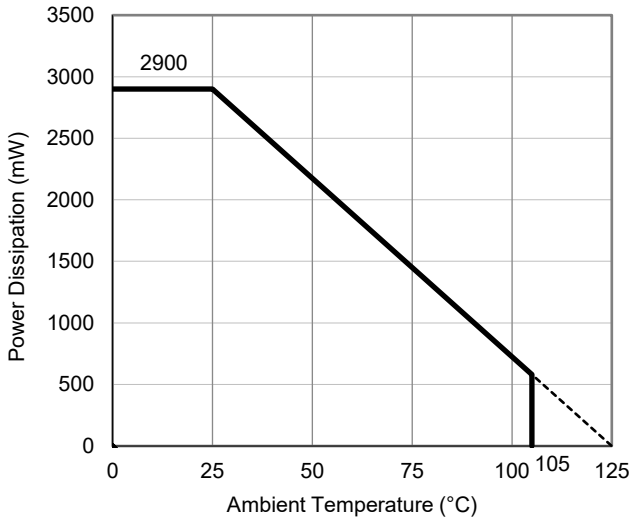

Power Dissipation vs. Ambient Temperature

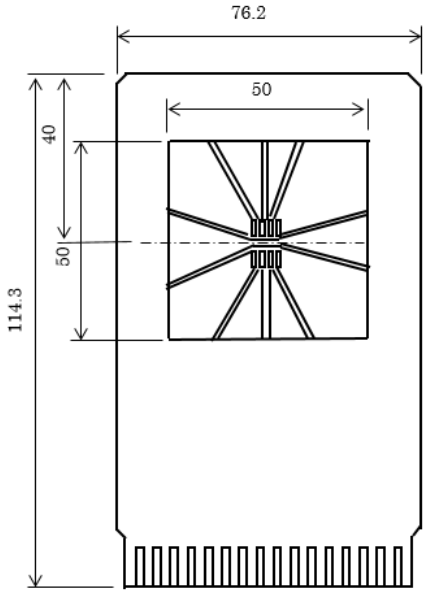

Measurement Board Pattern

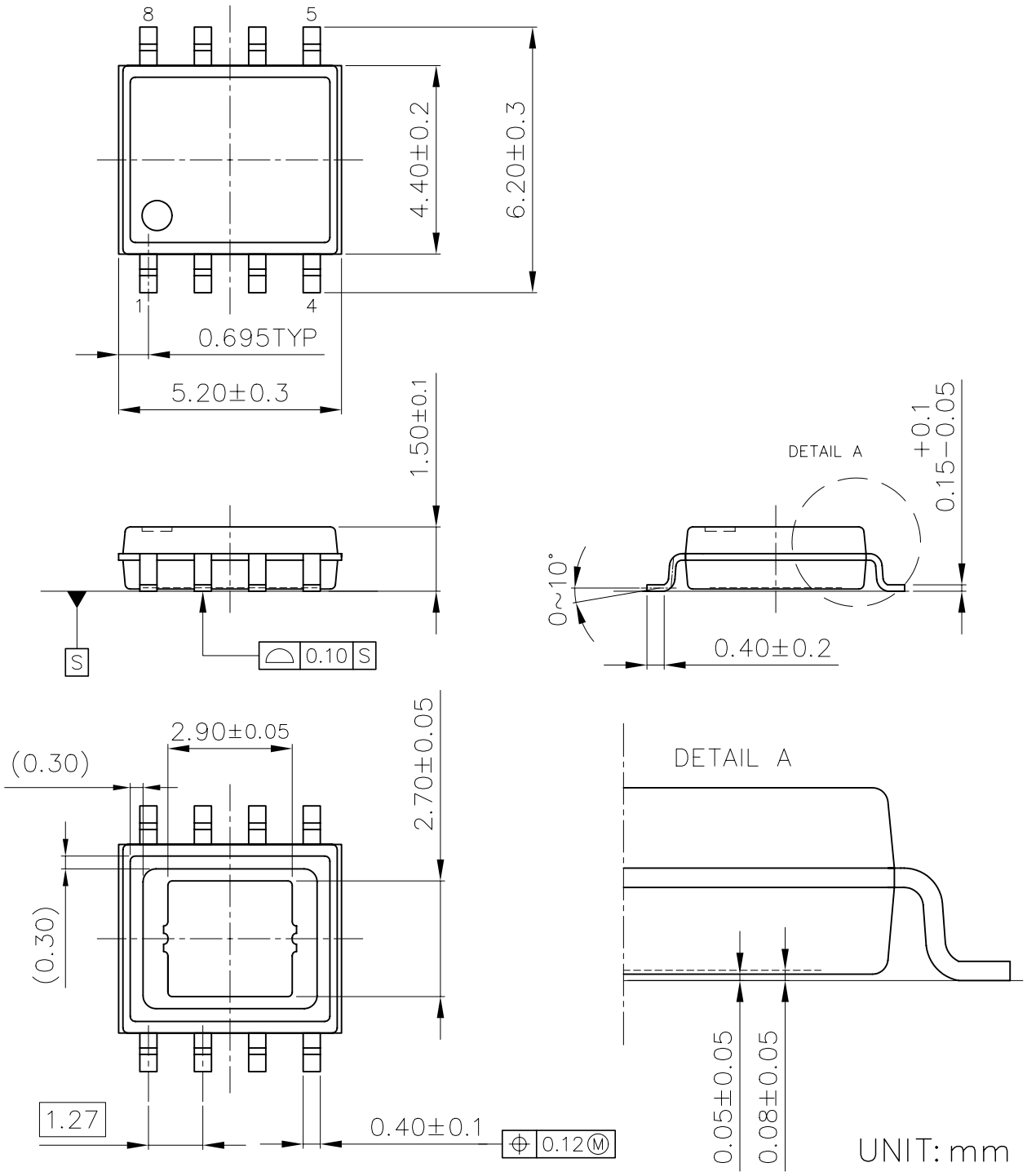

HSOP-8E Package Dimensions

1. The products and the product specifications described in this document are subject to change or discontinuation of production without notice for reasons such as improvement. Therefore, before deciding to use the products, please refer to our sales representatives for the latest information thereon.
2. The materials in this document may not be copied or otherwise reproduced in whole or in part without prior written consent of our company.
3. Please be sure to take any necessary formalities under relevant laws or regulations before exporting or otherwise taking out of your country the products or the technical information described herein.
4. The technical information described in this document shows typical characteristics of and example application circuits for the products. The release of such information is not to be construed as a warranty of or a grant of license under our company's or any third party's intellectual property rights or any other rights.
5. The products listed in this document are intended and designed for use as general electronic components in standard applications (office equipment, telecommunication equipment, measuring instruments, consumer electronic products, amusement equipment etc.). Those customers intending to use a product in an application requiring extreme quality and reliability, for example, in a highly specific application where the failure or misoperation of the product could result in human injury or death (aircraft, spacevehicle, nuclear reactor control system, traffic control system, automotive and transportation equipment, combustion equipment, safety devices, life support system etc.) should first contact us.
6. We are making our continuous effort to improve the quality and reliability of our products, but semiconductor products are likely to fail with certain probability. In order to prevent any injury to persons or damages to property resulting from such failure, customers should be careful enough to incorporate safety measures in their design, such as redundancy feature, fire containment feature and fail-safe feature. We do not assume any liability or responsibility for any loss or damage arising from misuse or inappropriate use of the products.
7. Anti-radiation design is not implemented in the products described in this document.
8. The X-ray exposure can influence functions and characteristics of the products. Confirm the product functions and characteristics in the evaluation stage.
9. WLCSP products should be used in light shielded environments. The light exposure can influence functions and characteristics of the products under operation or storage.
10. There can be variation in the marking when different AOI (Automated Optical Inspection) equipment is used. In the case of recognizing the marking characteristic with AOI, please contact our sales or our distributor before attempting to use AOI.
11. Please contact our sales representatives should you have any questions or comments concerning the products or the technical information.

NISSHINBO

Nisshinbo Micro Devices Inc.

Official website
https://www.nisshinbo-microdevices.co.jp/en/
Purchase information
https://www.nisshinbo-microdevices.co.jp/en/buy/

ENTEGRECİ

Bu belge www.entegreci.com üzerinden sunulmaktadır.

Elektronik komponent tedarikinde Entegreci

Entegreci, Eskişehir merkezli, Türkiye geneline satış yapan bir elektronik komponent mağazasıdır. Entegreler (IC), mikrodenetleyiciler, transistörler, diyotlar, pasif elemanlar, konnektörler, modüller ve geliştirme kartları tek adetten seri üretim adetlerine kadar satılır. Ürün sayfalarında güncel stok durumunu, fiyatı ve datasheet bağlantısını bulabilirsiniz.

Parça koduyla arama

Üretici parça numarasını yazın; stok ve fiyatı hemen görün.

www.entegreci.com

Ürün kategorileri

Entegreden kapasitöre tüm elektronik komponent kategorileri.

Kategorilere göz atın

Üreticiler

Aradığınız üreticinin ürünlerini tek sayfada inceleyin.

Üreticileri görün

Toplu alım ve teklif

Listede olmayan ya da yüksek adetli parçalar için teklif isteyin.

Teklif isteyin

www.entegreci.com | **destek@entegreci.com** | **0850 305 90 34**

Entegreci is an online electronic components store based in Türkiye. Search by manufacturer part number to see stock, prices and datasheets for integrated circuits, microcontrollers, transistors, passive components and connectors, or request a quote for parts that are not listed.

Bu sayfa Entegreci tarafından eklenmiştir. Belgenin önceki sayfaları asıl yayıncısına aittir ve içeriği değiştirilmemiştir; en güncel sürüm için belgenin yayıncısına başvurun.