NISSHINBO

R5326x SERIES

Automatic Mode Shift Dual 150mA LDO

NO.EA-138-140530

OUTLINE

The R5326x Series are CMOS-based voltage regulator ICs with high output voltage accuracy, Typ. 5.5μA low supply current, and remarkably improved transient response compared with the conventional low supply current voltage regulators. The supply current of IC itself is automatically shifts between fast mode and low power mode depending on the load current. (The current threshold is fixed internally.) Each of these voltage regulator ICs consists of a voltage reference unit, an error amplifier, resistors for setting the output voltage, a current limit circuit for preventing from the destruction by an over current, and so on.

The chip enable function realizes the standby mode with ultra low supply current.
Since the packages for these ICs are SOT-23-6 and DFN(PL)1820-6, and chip size package, WLCSP-6-P1, dual LDO regulators are included in each package, high density mounting of the ICs on boards is possible.

FEATURES

- Supply Current (Low Power Mode).....Typ. 5.5μA×2 (VR1&VR2) (I_{OUT}=0mA)
- Supply Current (Fast Mode).....Typ. 50μA×2 (VR1&VR2) (I_{OUT}=10mA)
- Standby Current .....Typ. 0.1μA (VR1&VR2)
- Dropout Voltage .....Typ. 0.19V (I_{OUT}=150mA, V_{OUT}=2.8V)
- Ripple Rejection.....Typ. 70dB (f=1kHz)
  Typ. 60dB (f=10kHz)
- Input Voltage Range .....1.4V to 6.0V
- Output Voltage Range.....0.8V to 4.2V (0.1V steps)
  (For details, please refer to MARK INFORMATIONS.)
- Output Voltage Accuracy.....±1.0% (V_{OUT}>1.5V)
- Line Regulation .....Typ. 0.02%/V
- Packages .....WLCSP-6-P1, DFN(PL)1820-6,
  SOT-23-6
- Built-in fold-back protection circuit .....Typ. 50mA (Current at short mode)
- Ceramic Capacitor is recommended. .....1.0μF to 3.3μF
  (Depending on V_{IN} and set V_{OUT}. Refer to the electrical characteristics table.)

APPLICATIONS

- Power source for handheld communication equipment.
- Power source for electrical appliances such as cameras, VCRs and camcorders.
- Power source for battery-powered equipment.

BLOCK DIAGRAMS

R5326xxxxA

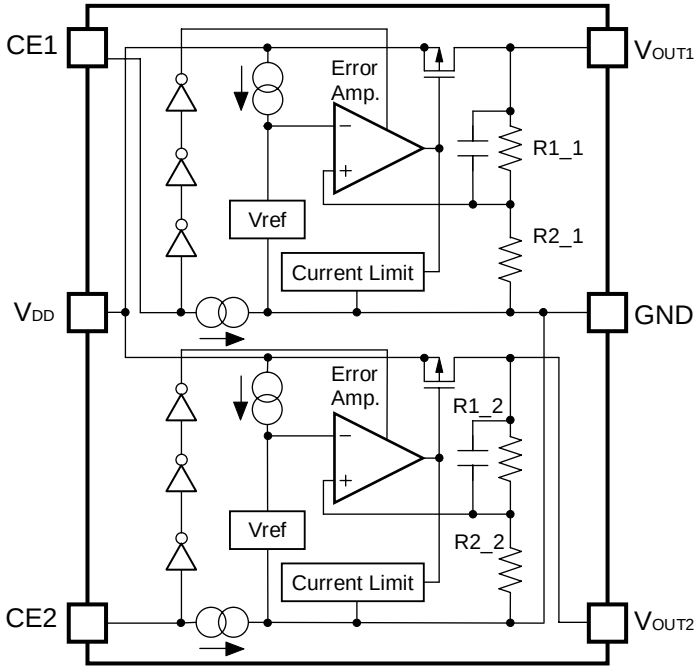

R5326xxxxB

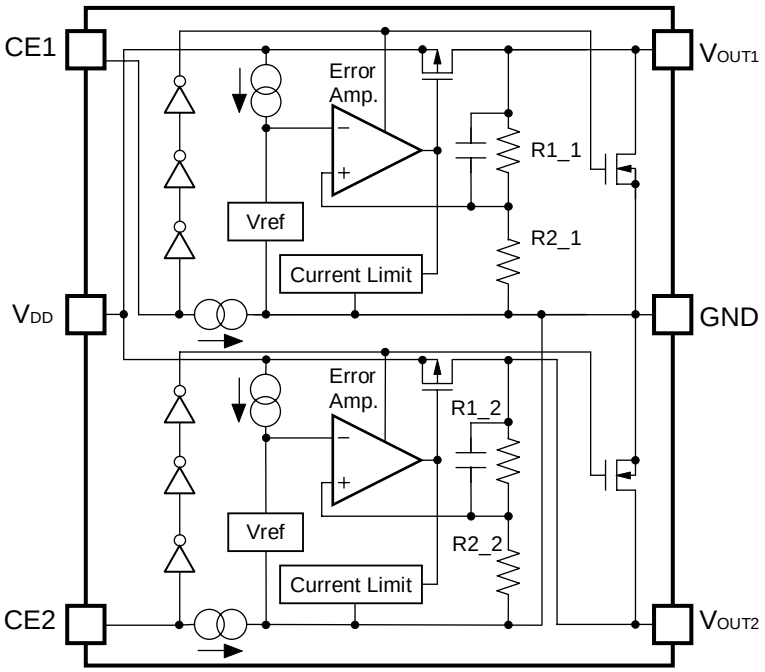

SELECTION GUIDE

The output voltage, auto discharge function, package for the ICs can be selected at the user's request.

Product Name	Package	Quantity per Reel	Pb Free	Halogen Free
R5326Zxxx∗-E2-F	WLCSP-6-P1	5,000 pcs	Yes	Yes
R5326Kxxx∗-TR	DFN(PL)1820-6	5,000 pcs	Yes	Yes
R5326Nxxx∗-TR-FE	SOT-23-6	3,000 pcs	Yes	Yes

xxx : The combination of output voltage for each channel can be designated by serial numbers. (from 001)
The output voltage for each channel can be set in the range from 0.8V to 4.2V in 0.1V steps.
(For details, please refer to MARK INFORMATIONS.)

∗ : The auto discharge function at off state are options as follows.
(A) without auto discharge function at off state
(B) with auto discharge function at off state

PIN CONFIGURATIONS

WLCSP-6-P1

Mark Side

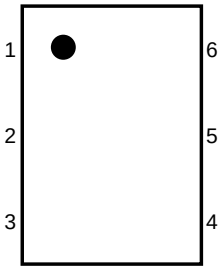

Bump Side

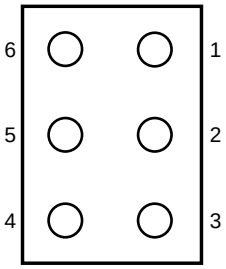

DFN(PL)1820-6

Top View

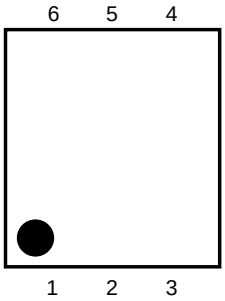

Bottom View

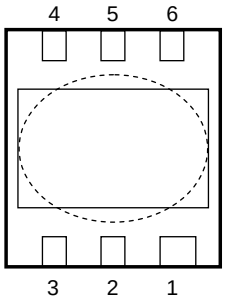

SOT-23-6

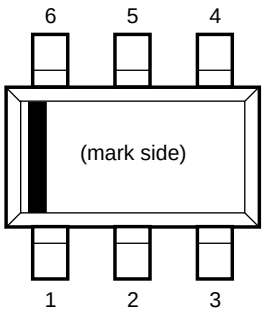

PIN DESCRIPTIONS

- **WLCSP-6-P1, SOT-23-6**

Pin No	Symbol	Pin Description
1	V_{OUT1}	Output Pin 1
2	V_{DD}	Input Pin
3	V_{OUT2}	Output Pin 2
4	CE2	Chip Enable Pin 2 ("H" Active)
5	GND	Ground Pin
6	CE1	Chip Enable Pin 1 ("H" Active)

- **DFN(PL)1820-6**

Pin No	Symbol	Pin Description
1	V_{OUT2}	Output Pin 2
2	V_{DD}	Input Pin
3	V_{OUT1}	Output Pin 1
4	CE1	Chip Enable Pin 1 ("H" Active)
5	GND	Ground Pin
6	CE2	Chip Enable Pin 2 ("H" Active)

∗) Tab is GND level. (They are connected to the reverse side of this IC.)
The tab is better to be connected to the GND, but leaving it open is also acceptable.

ABSOLUTE MAXIMUM RATINGS

Symbol	Item	Rating	Unit
V_{IN}	Input Voltage	6.5	V
V_{CE}	Input Voltage (CE Pin)	−0.3 to 6.5	V
V_{OUT}	Output Voltage	−0.3 to V_{IN}+0.3	V
I_{OUT1}, I_{OUT2}	Output Current	200	mA
P_D	Power Dissipation (WLCSP-6-P1) *	633	mW
	Power Dissipation (DFN(PL)1820-6) *	880	
	Power Dissipation (SOT-23-6) *	420	
Topt	Operating Temperature Range	−40 to 85	°C
Tstg	Storage Temperature Range	−55 to 125	°C

∗) For Power Dissipation, please refer to PACKAGE INFORMATION.

ABSOLUTE MAXIMUM RATINGS

Electronic and mechanical stress momentarily exceeded absolute maximum ratings may cause the permanent damages and may degrade the life time and safety for both device and system using the device in the field. The functional operation at or over these absolute maximum ratings is not assured.

RECOMMENDED OPERATING CONDITIONS (ELECTRICAL CHARACTERISTICS)

All of electronic equipment should be designed that the mounted semiconductor devices operate within the recommended operating conditions. The semiconductor devices cannot operate normally over the recommended operating conditions, even if when they are used over such conditions by momentary electronic noise or surge. And the semiconductor devices may receive serious damage when they continue to operate over the recommended operating conditions.

ELECTRICAL CHARACTERISTICS

- **R5326xxxxA/B**

VR1/VR2 Topt=25°C

Symbol	Item	Conditions		MIN.	TYP.	MAX.	Unit
V_{OUT}	Output Voltage	V_{IN}–V_{OUT}=1V, I_{OUT}=1mA	V_{OUT} > 1.5V	×0.99		×1.01	V
			V_{OUT} ≦ 1.5V	–15		+15	mV
I_{OUT}	Output Current	V_{IN}–V_{OUT}=1V		150			mA
$\Delta V_{OUT}/\Delta I_{OUT}$	Load Regulation	V_{IN}–V_{OUT}=1V, 1mA ≦ I_{OUT} ≦ 150mA				80	mV
V_{DIF}	Dropout Voltage	I_{OUT}=150mA	0.8V ≦ V_{OUT}<0.9V		0.62	0.87	V
			0.9V ≦ V_{OUT}<1.0V		0.58	0.78	
			1.0V ≦ V_{OUT}<1.2V		0.48	0.69	
			1.2V ≦ V_{OUT}<1.5V		0.40	0.59	
			1.5V ≦ V_{OUT}<2.0V		0.31	0.48	
			2.0V ≦ V_{OUT}<2.8V		0.22	0.37	
			2.8 ≦ V_{OUT}		0.19	0.27	
I_{SS1}	Supply Current (Low Power Mode)	V_{IN}–V_{OUT}=1V, I_{OUT}=0mA			5.5	16	µA
I_{SS2}	Supply Current (Fast Mode)	V_{IN}–V_{OUT}=1V, I_{OUT}=10mA			50	105	µA
Istandby	Standby Current	V_{IN}=6V, V_{CE1}=V_{CE2}=GND			0.1	1.0	µA
I_{OUTL}	Low Power Mode Current threshold	V_{IN}–V_{OUT}=1V, I_{OUT}=30mA to 1µA			0.6		mA
I_{OUTH}	Fast Response Mode Current threshold	V_{IN}–V_{OUT}=1V, I_{OUT}=1µA to 30mA			3		mA
$\Delta V_{OUT}/\Delta V_{IN}$	Line Regulation	V_{OUT}+0.5V ≦ V_{IN} ≦ 6V, I_{OUT}=30mA (∗V_{IN} ≧ 1.8V)			±0.02	±0.2	%/V
RR	Ripple Rejection	Ripple 0.2Vp-p, V_{IN}–V_{OUT}=1V, I_{OUT}=30mA (In case that V_{OUT}<1.5V, V_{IN}–V_{OUT}=1.5V)	f=1kHz		70		dB
			f=10kHz		60		
V_{IN}	Input Voltage			1.4		6.0	V
$\Delta V_{OUT}/\Delta Topt$	Output Voltage Temperature Coefficient	I_{OUT}=30mA, –40°C ≦ Topt ≦ 85°C			±100		ppm/°C
I_{SC}	Short Current Limit	V_{OUT}=0V			50		mA
I_{PD}	CE Pull-down Current			0.15	0.30	0.45	µA
V_{CEH}	CE Input Voltage "H"			1.0		6.0	V
V_{CEL}	CE Input Voltage "L"			0		0.4	V
en	Output Noise	BW=10Hz to 100kHz			30		µVrms
R_{LOW}	Low Output Nch Tr. ON Resistance (of B version)				40		Ω

TYPICAL APPLICATION

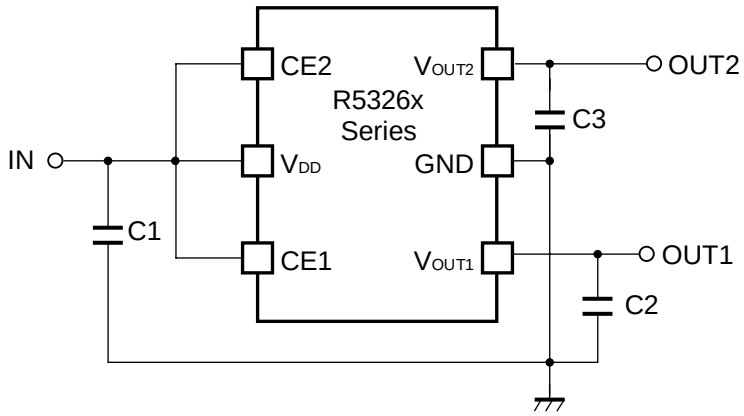

(External Components)
Capacitor; Ceramic Type
C1 : 1.0µF Ceramic
C2, C3 : Refer to the following table

Recommended Ceramic capacitor for Output (C2, C3)

Output Voltage Range	Minimum Input Voltage	
	1.4V ≦ V_{IN} < 1.65V	1.65V ≦ V_{IN}
0.8V ≦ V_{OUT} < 1.2V	3.3µF or more	2.2µF or more
1.2V ≦ V_{OUT} ≦ 4.2V	3.3µF or more	1.0µF or more

Output Capacitors
3.3µF (Murata) GRM219B31A335KE18B
2.2µF (Murata) GRM155B30J225M
1.0µF (Murata) GRM155B31A105KE15

TECHNICAL NOTES

When using these ICs, consider the following points:

Mounting on PCB

Make V_{DD} and GND lines sufficient. If their impedance is high, noise pickup or unstable operation may result. Connect a capacitor with a capacitance value as much as 1.0μF or more as C1 between V_{DD} and GND pin, and as close as possible to the pins.

Set external components, especially the output capacitor, as close as possible to the ICs, and make wiring as short as possible.

Phase Compensation

In these ICs, phase compensation is made for securing stable operation even if the load current is varied. For this purpose, use capacitors C2 and C3 which are shown below table “Recommended Ceramic capacitor for output “If you use a tantalum type capacitor and ESR value of the capacitor is large, output might be unstable. Evaluate your circuit with considering frequency characteristics.

TEST CIRCUITS

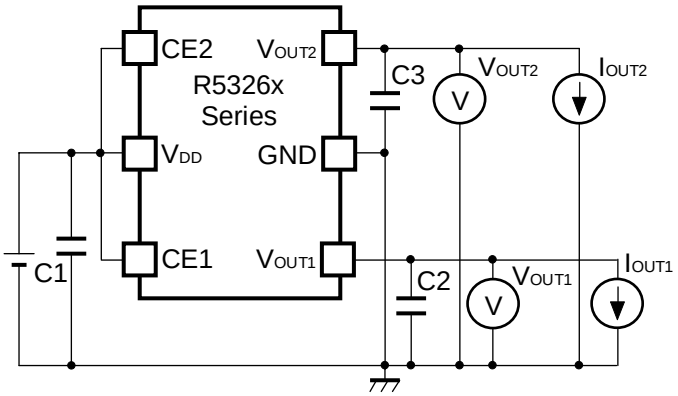

C1=Ceramic 1.0μF
C2,C3=refer to the term of the external capacitors

Fig.1 Standard test Circuit

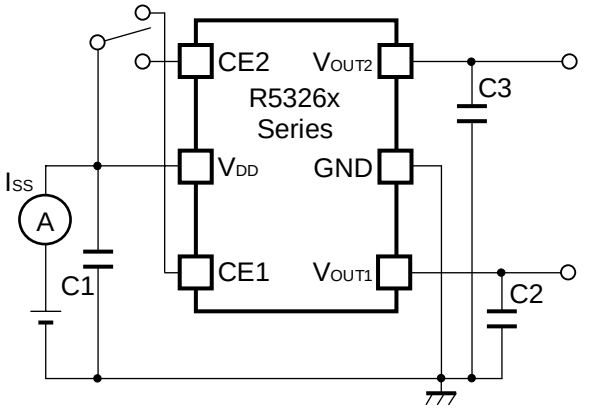

C1=Ceramic 1.0μF
C2,C3=refer to the term of the external capacitors

Fig.2 Supply Current Test Circuit

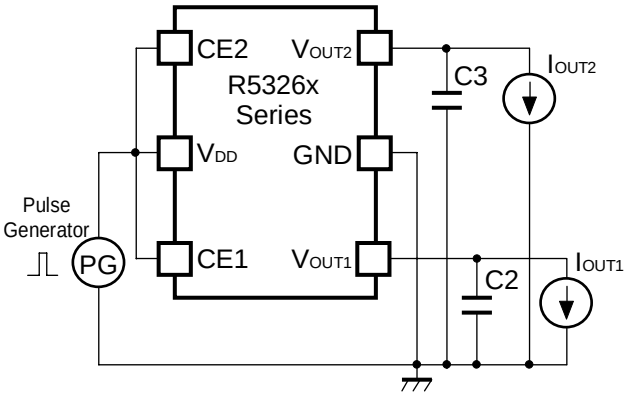

C2,C3= refer to the term of the external capacitors

Fig.3 Ripple Rejection, Line Transient Response Test Circuit

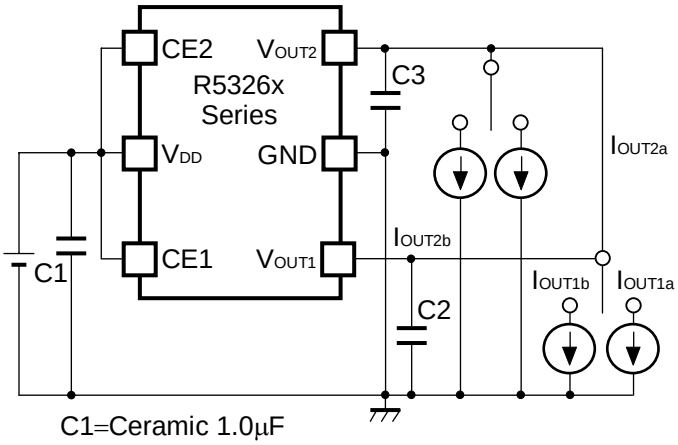

C1=Ceramic 1.0μF
C2,C3= refer to the term of the external capacitors

Fig.4 Load Transient Response Test Circuit

TYPICAL CHARACTERISTICS

1) Output Voltage vs. Output Current

0.8V(VR1/VR2)

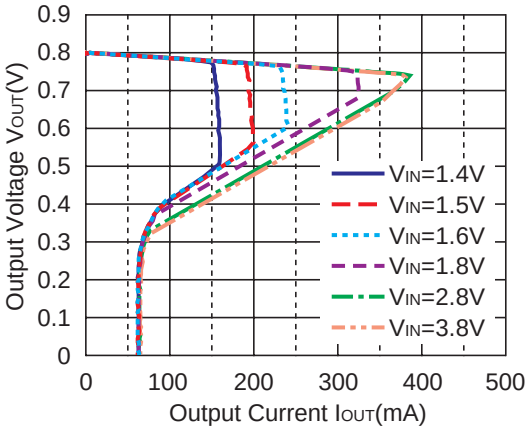

1.5V(VR1/VR2)

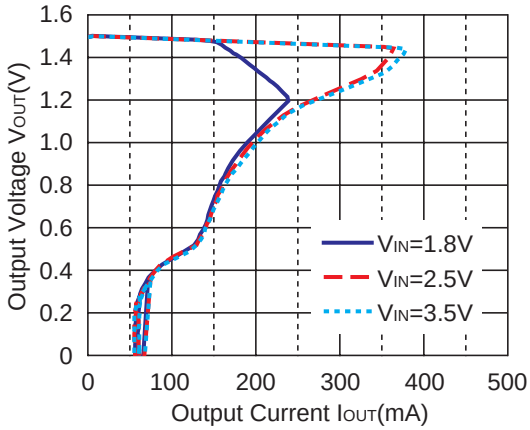

2.8V(VR1/VR2)

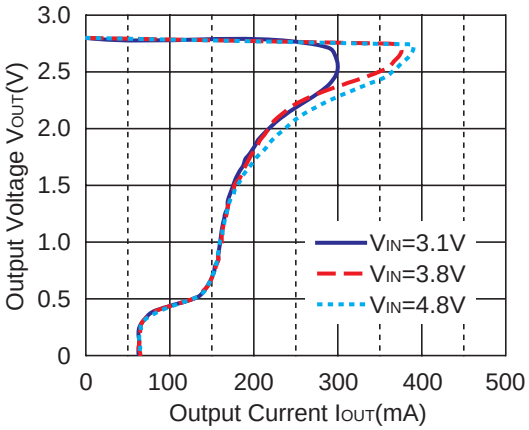

4.0V(VR1/VR2)

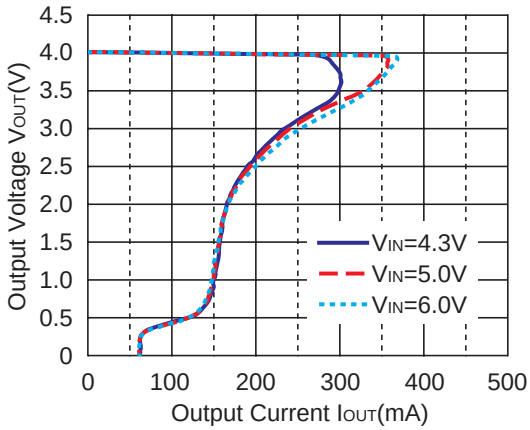

2) Input Voltage vs. Output Voltage

0.8V(VR1/VR2)

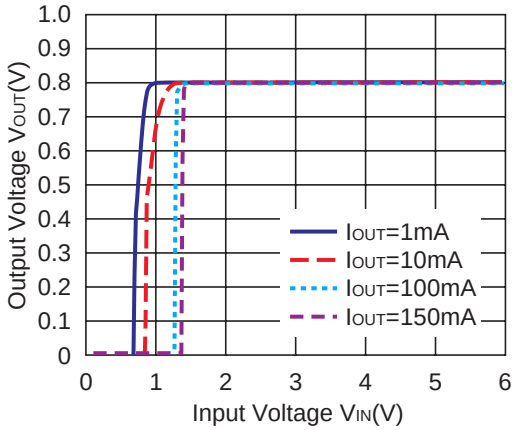

1.5V(VR1/VR2)

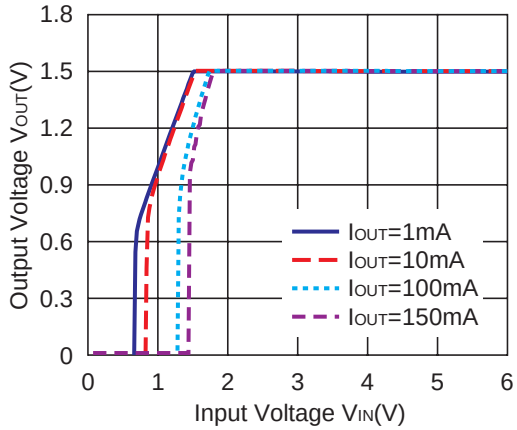

2.8V(VR1/VR2)

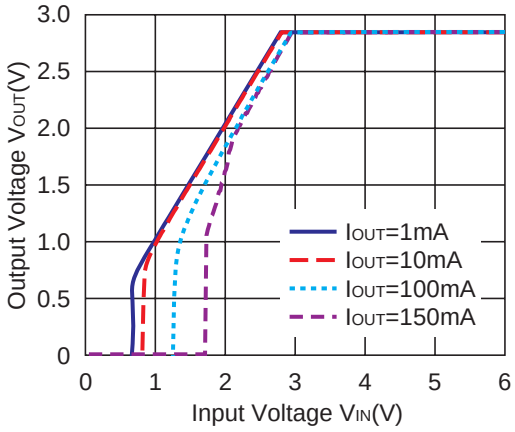

4.0V(VR1/VR2)

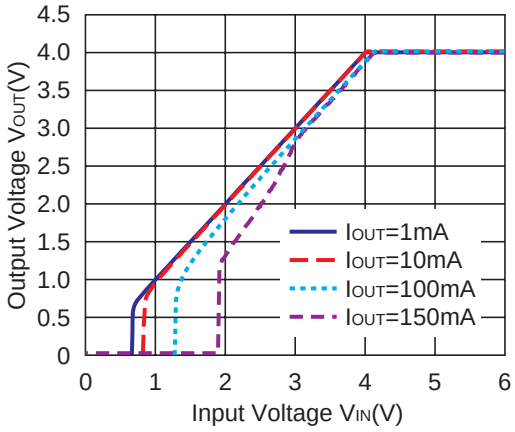

3) Supply Current vs. Input Voltage

0.8V(VR1/VR2)

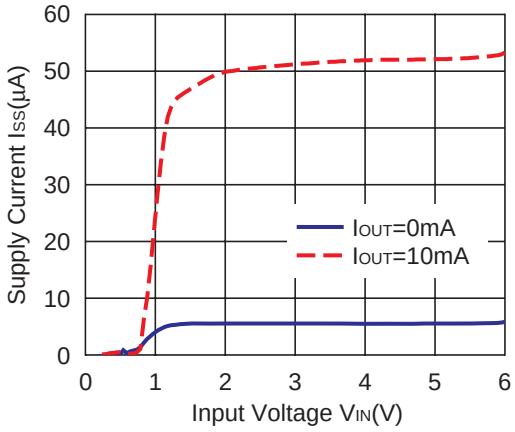

1.5V(VR1/VR2)

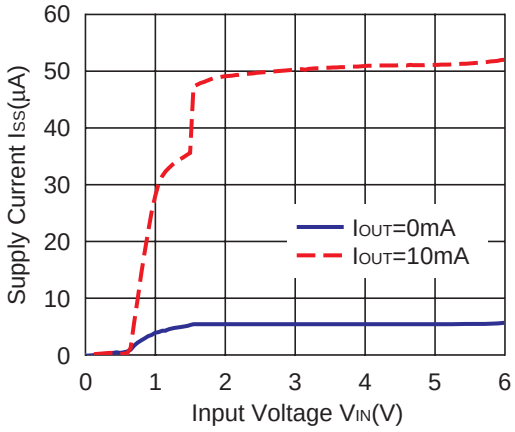

2.8V(VR1/VR2)

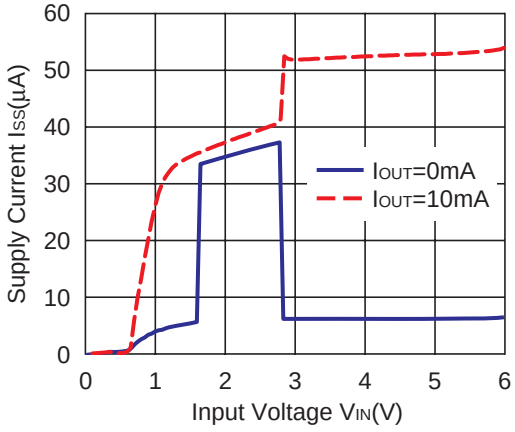

4.0V(VR1/VR2)

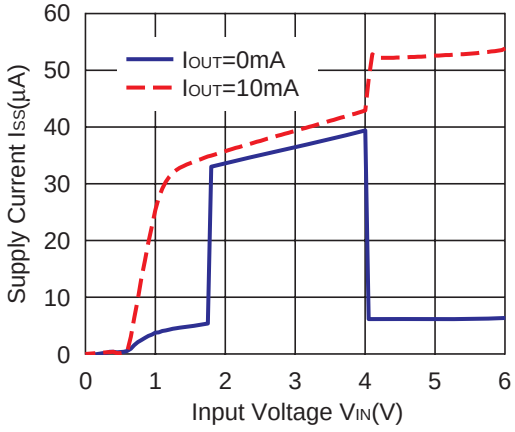

4) Supply current vs. Output current

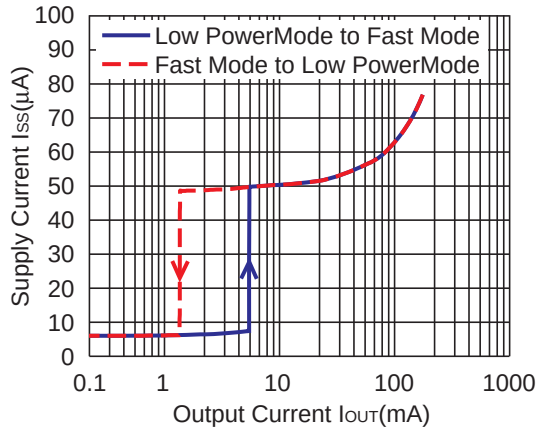

5) Output Voltage vs. Temperature

0.8V(VR1/VR2)

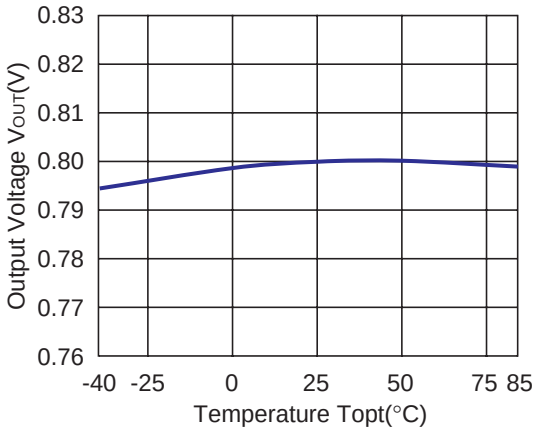

1.5V(VR1/VR2)

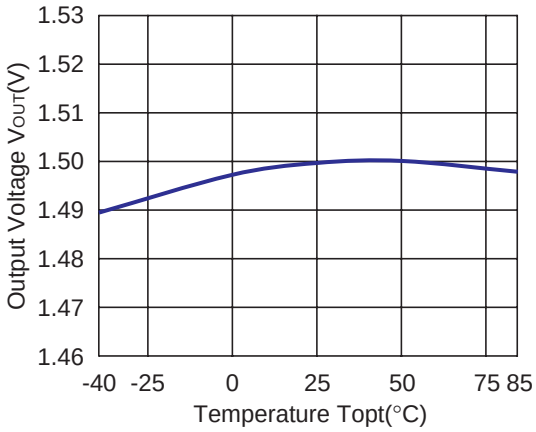

2.8V(VR1/VR2)

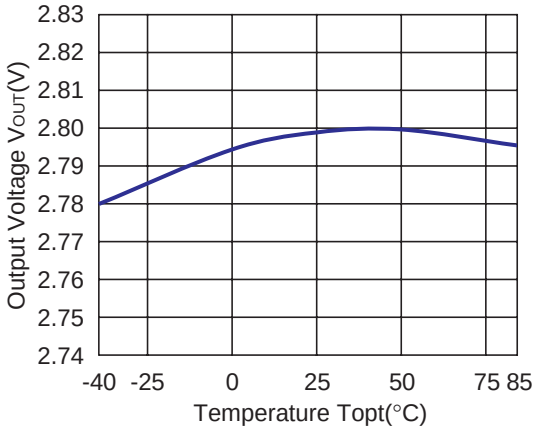

4.0V(VR1/VR2)

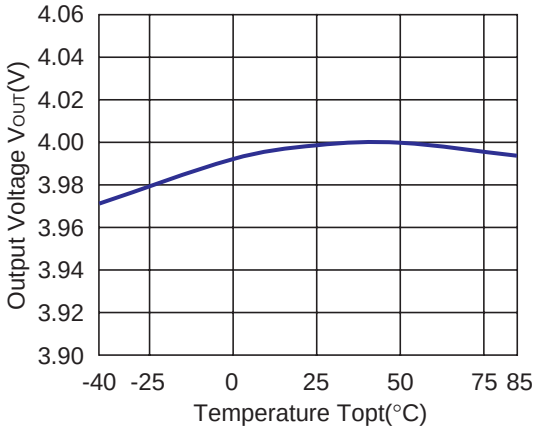

6) Supply Current vs. Temperature

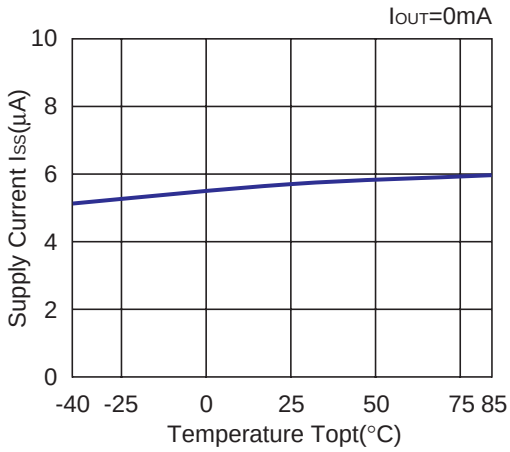

7) Dropout Voltage vs. Output Current

0.8V(VR1/VR2)

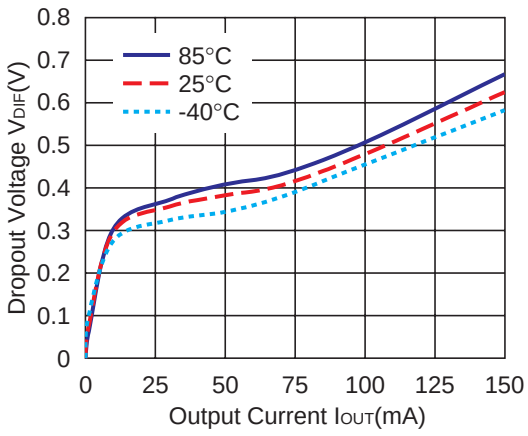

0.9V(VR1/VR2)

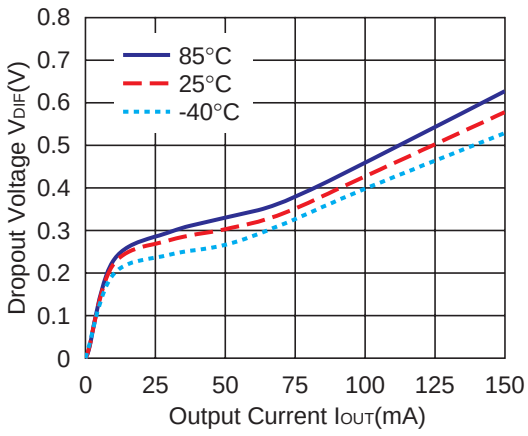

1.0V(VR1/VR2)

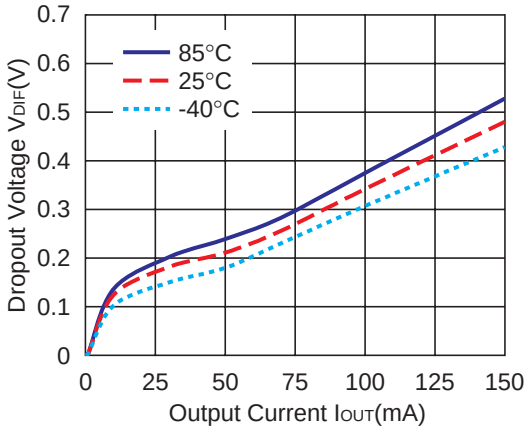

1.2V(VR1/VR2)

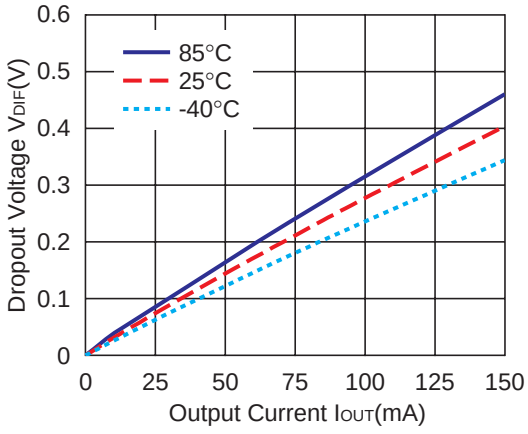

1.5V(VR1/VR2)

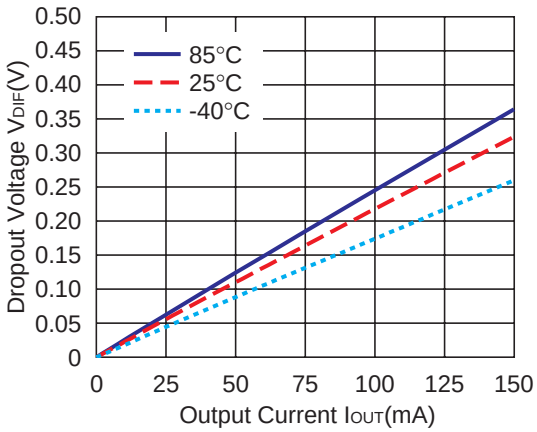

2.0V(VR1/VR2)

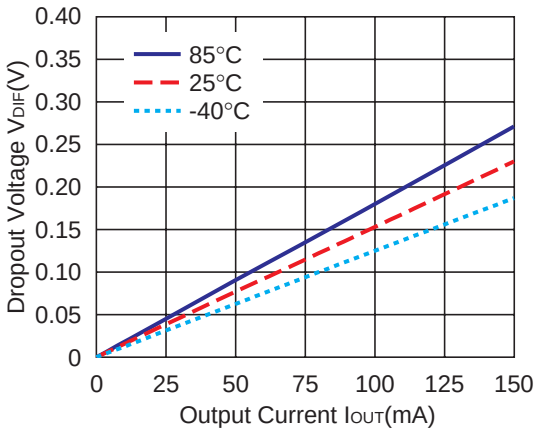

2.8V(VR1/VR2)

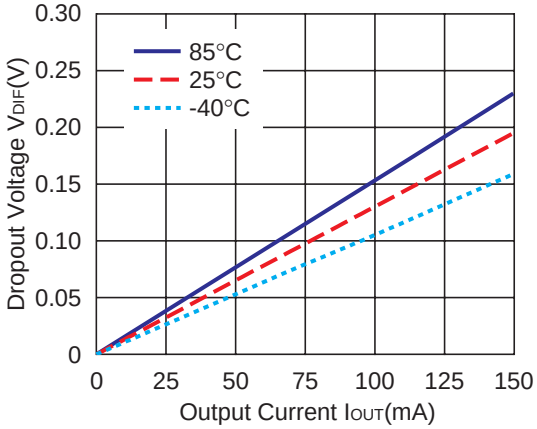

4.0V(VR1/VR2)

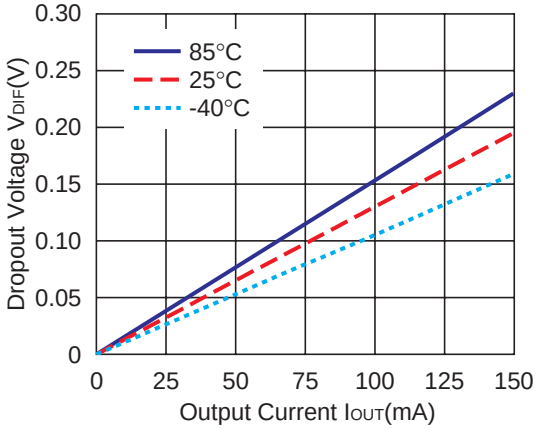

8) Dropout Voltage vs. Set Output Voltage

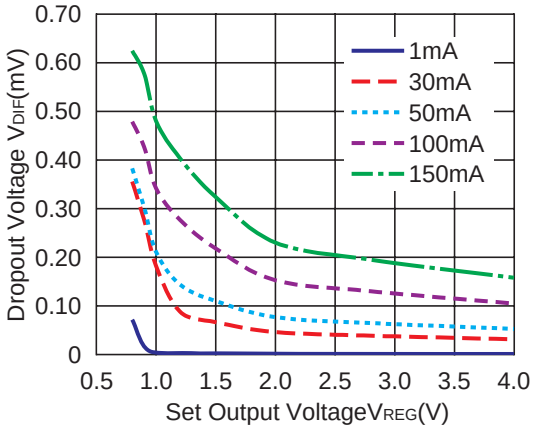

9) Ripple Rejection vs. Input Voltage

(Topt=25°C, Ripple 0.5Vp-p, CIN=none, COUT=Ceramic 1.0µF)

2.8V(VR1/VR2)

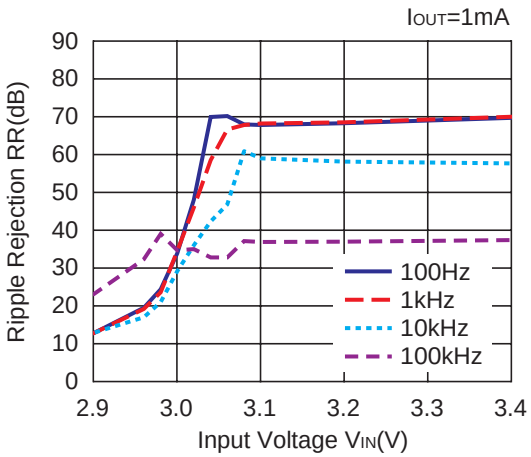

2.8V(VR1/VR2)

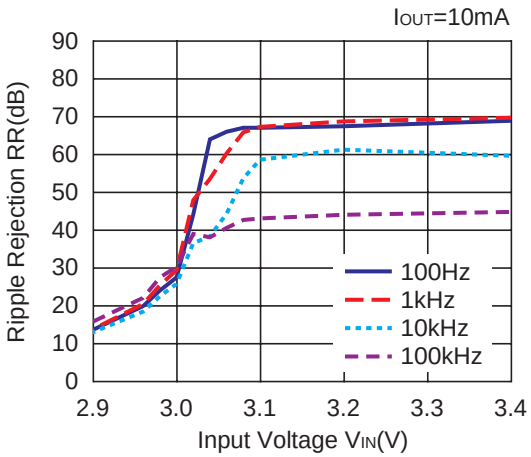

2.8V(VR1/VR2)

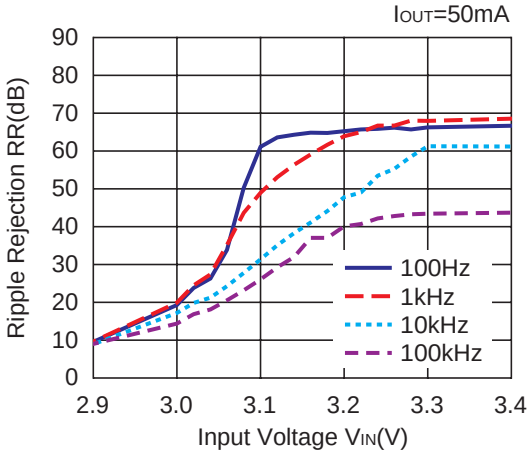

10) Minimum Operating Voltage

0.8V(VR1/VR2)

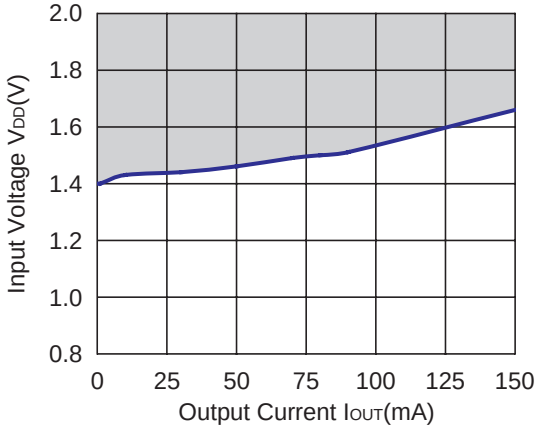

Hatched area is available for 0.8V output

11) Ripple Rejection vs Frequency (C_{IN}=none)

0.8V(VR1/VR2)

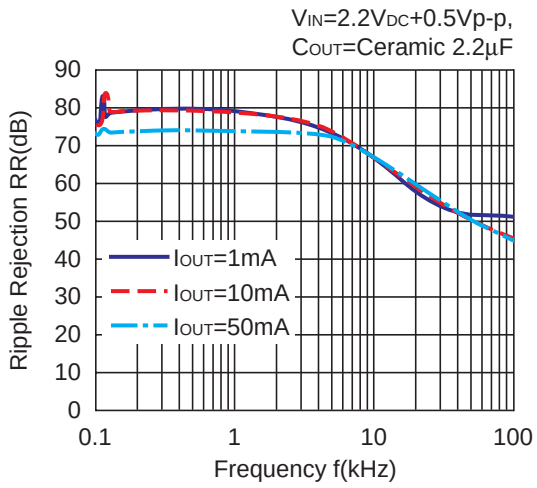

0.8V(VR1/VR2)

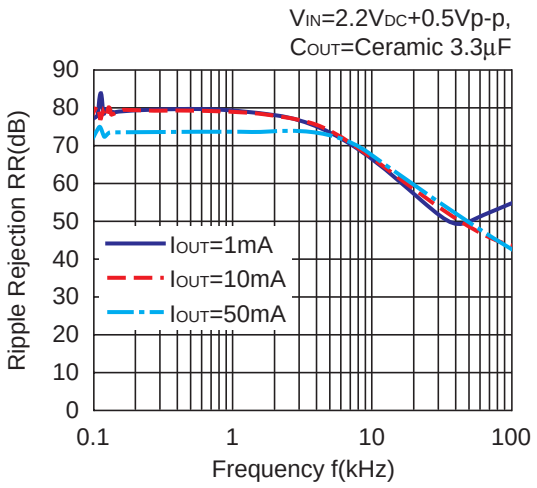

1.5V(VR1/VR2)

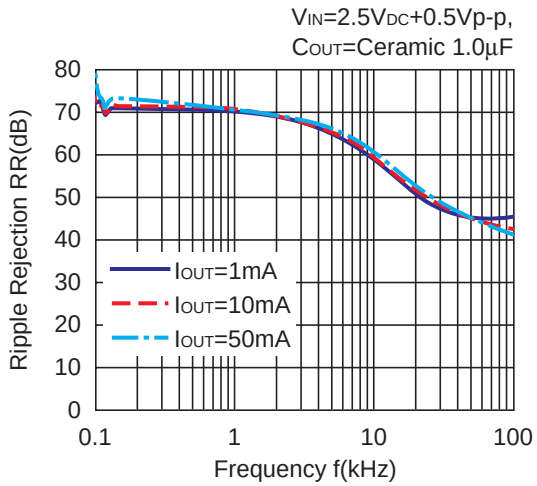

1.5V(VR1/VR2)

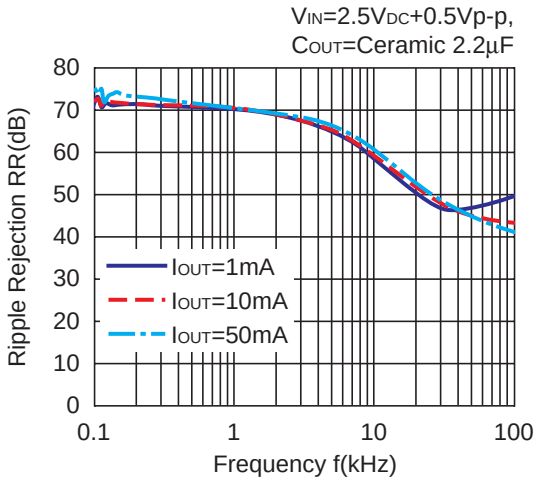

2.8V(VR1/VR2)

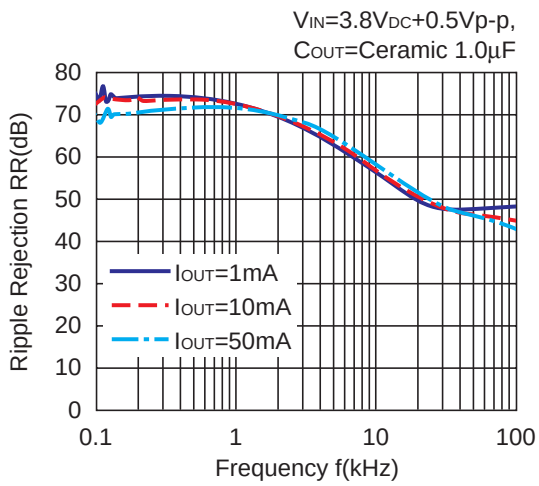

2.8V(VR1/VR2)

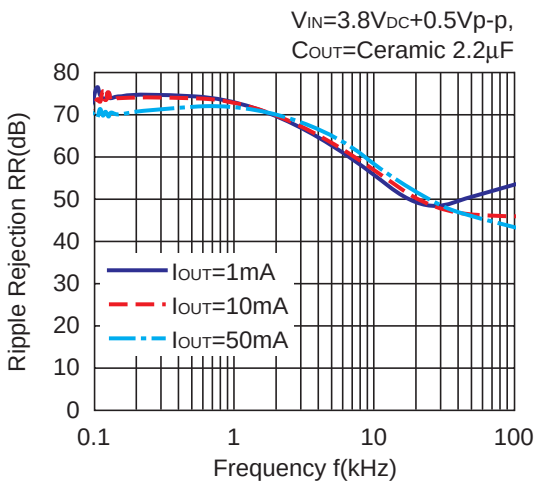

4.0V(VR1/VR2)

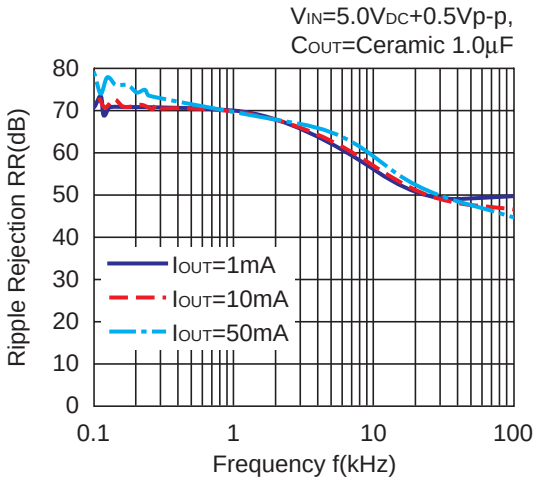

4.0V(VR1/VR2)

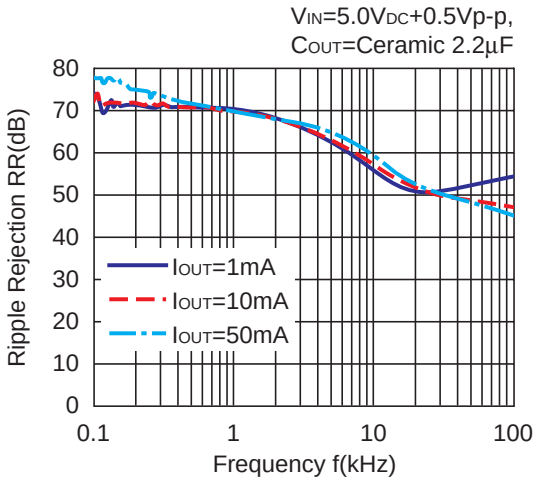

12) Input Transient Response (IOUT=30mA,tr=tf=5µs, CIN=none)

0.8V(VR1/VR2)

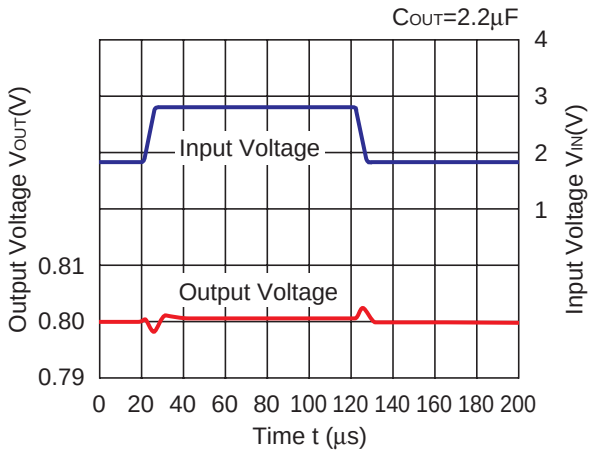

1.5V(VR1/VR2)

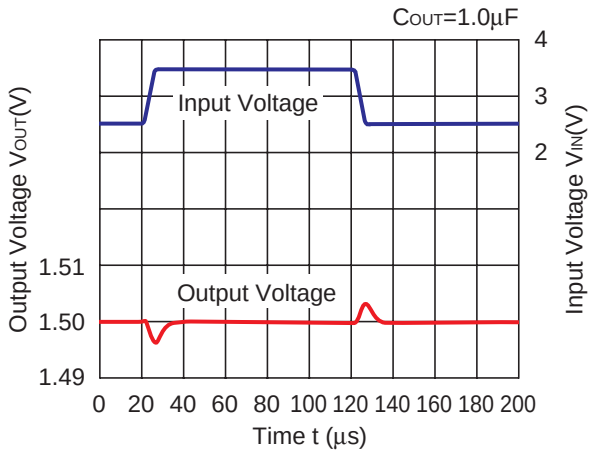

2.8V(VR1/VR2)

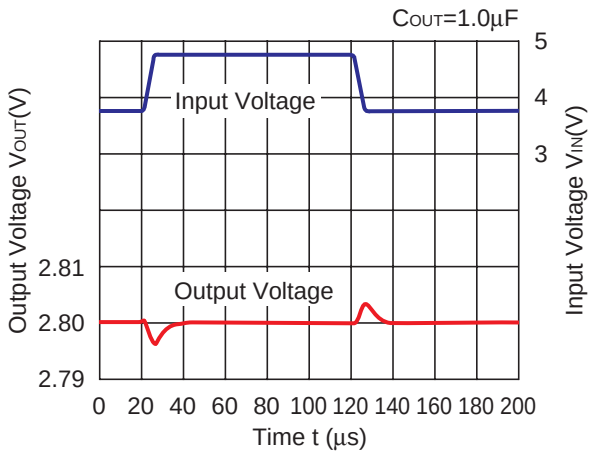

4.0V(VR1/VR2)

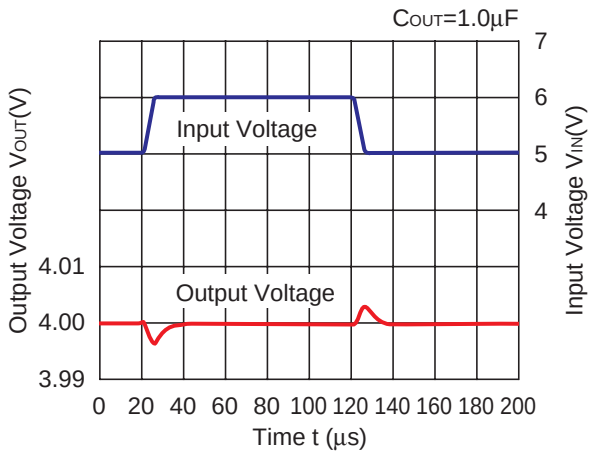

13) Load Transient Response1 (tr=tf=0.5µs, CIN=1.0µF)

0.8V(VR1/VR2)

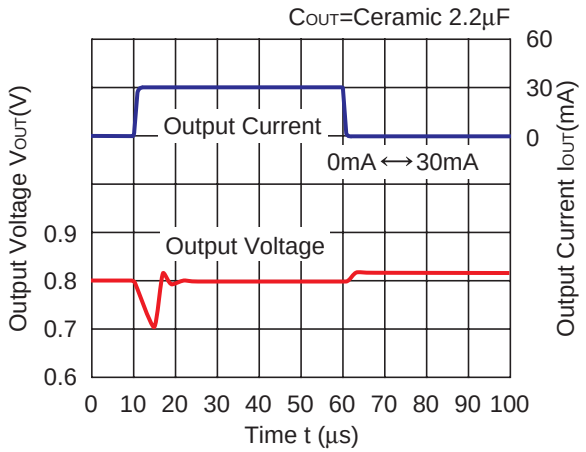

0.8V(VR1/VR2)

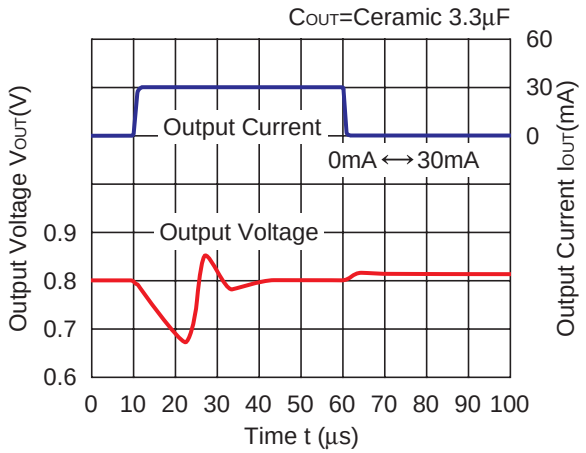

0.8V(VR1/VR2)

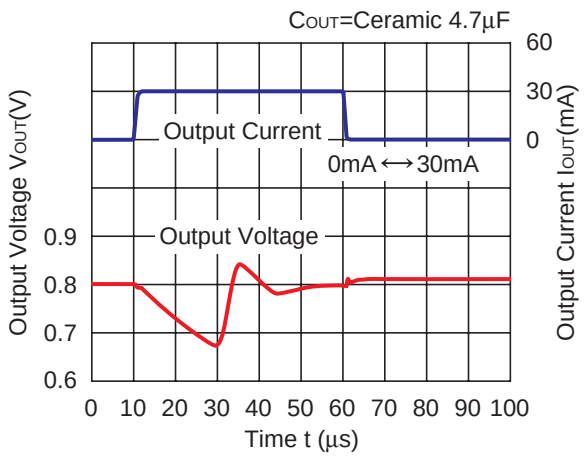

0.8V(VR1/VR2)

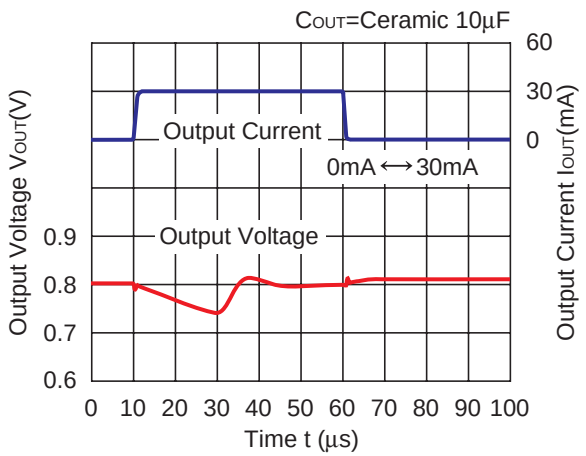

0.8V(VR1/VR2)

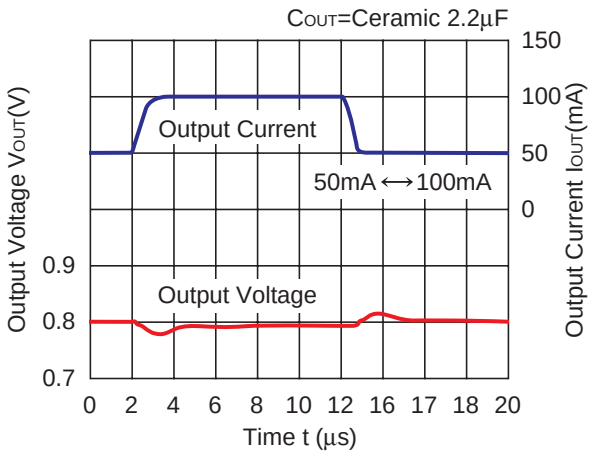

0.8V(VR1/VR2)

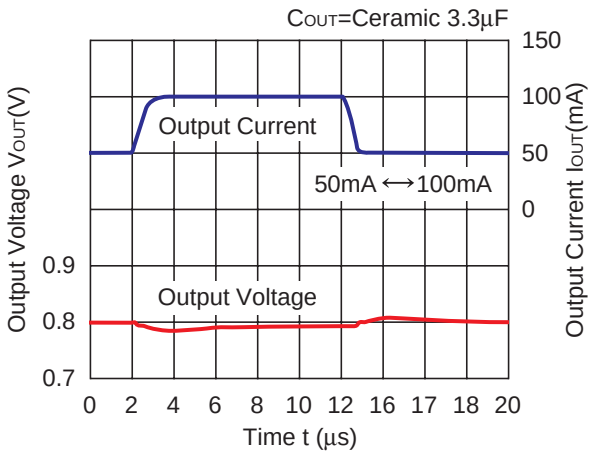

R5326x

1.5V (VR1/VR2)

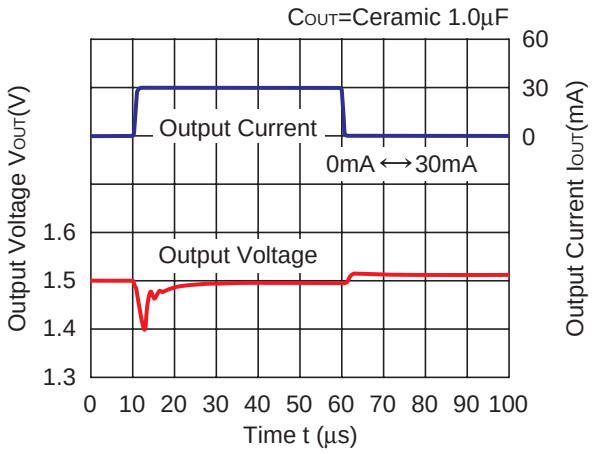

1.5V (VR1/VR2)

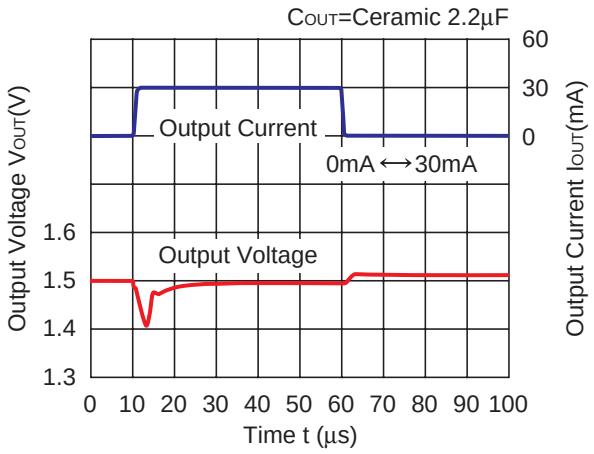

1.5V (VR1/VR2)

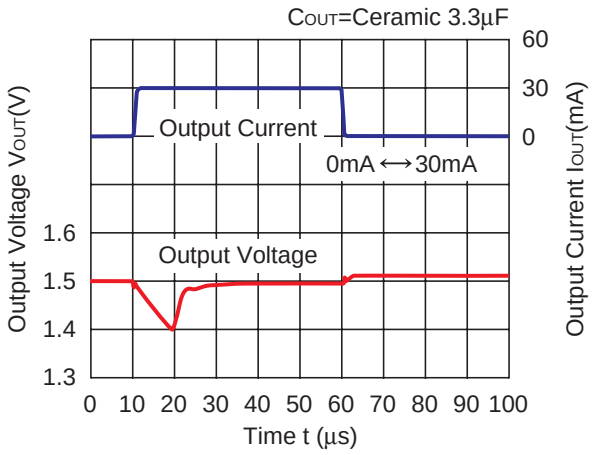

1.5V (VR1/VR2)

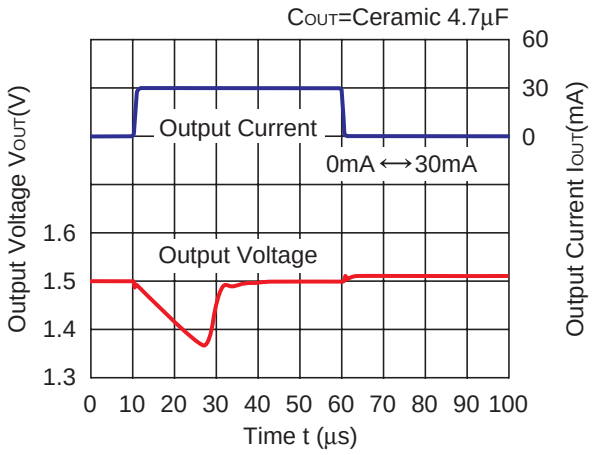

1.5V (VR1/VR2)

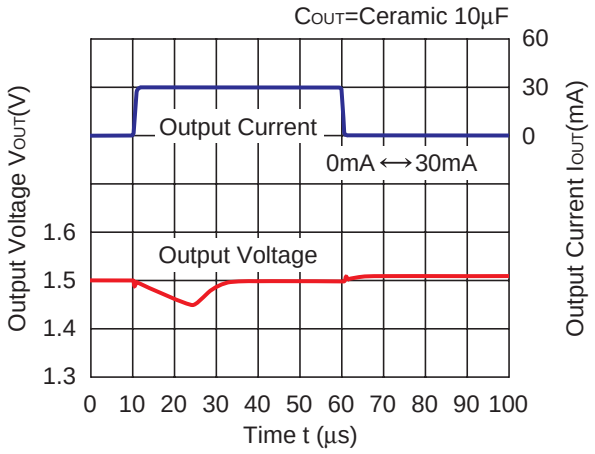

1.5V (VR1/VR2)

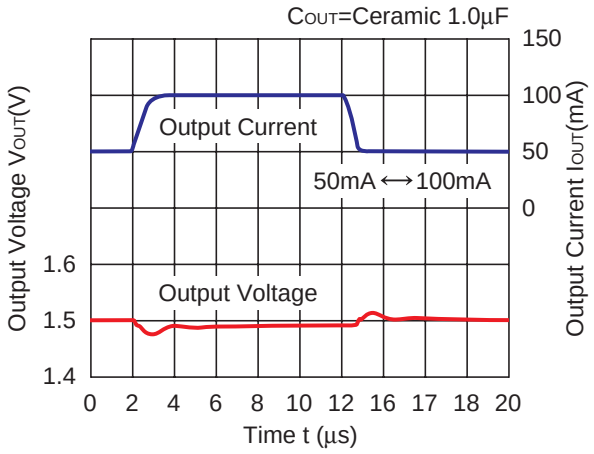

2.8V (VR1/VR2)

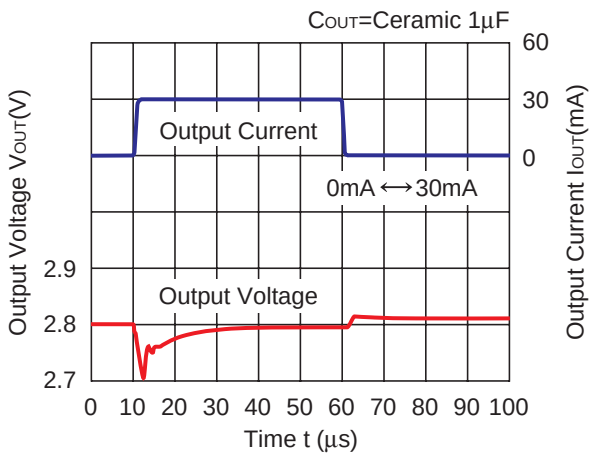

2.8V (VR1/VR2)

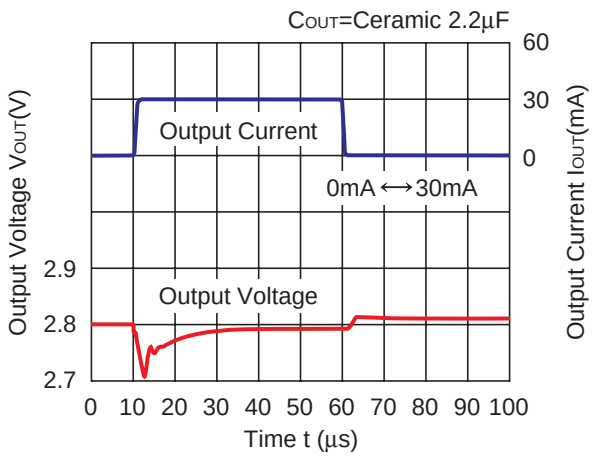

2.8V (VR1/VR2)

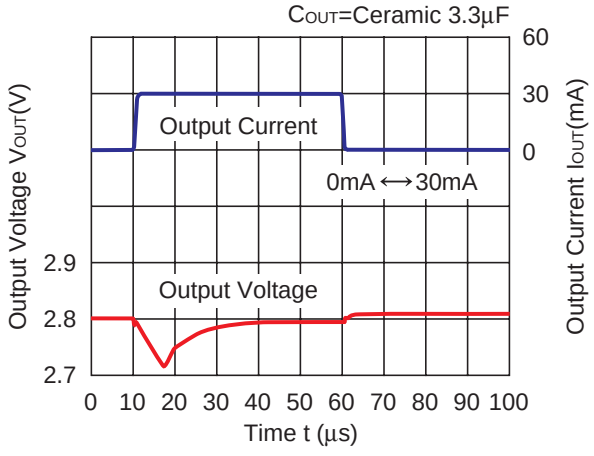

2.8V (VR1/VR2)

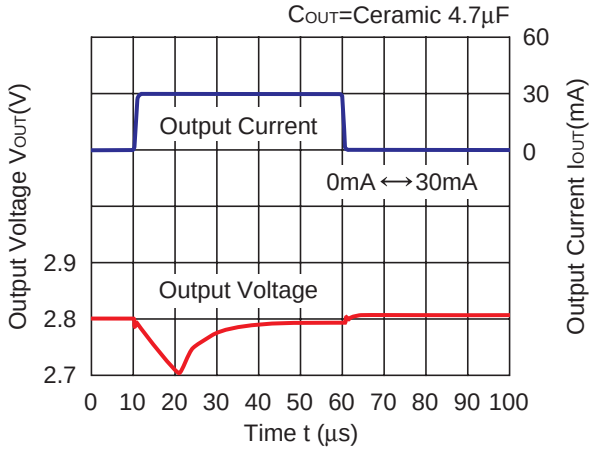

2.8V (VR1/VR2)

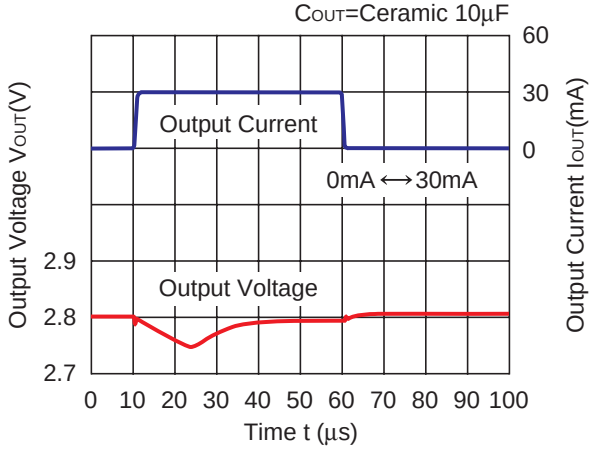

2.8V (VR1/VR2)

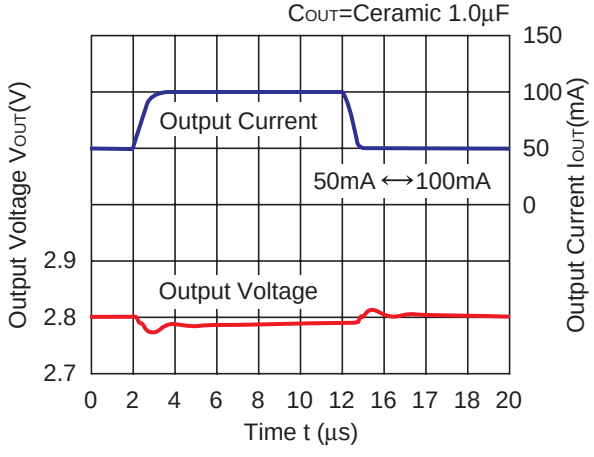

4.0V (VR1/VR2)

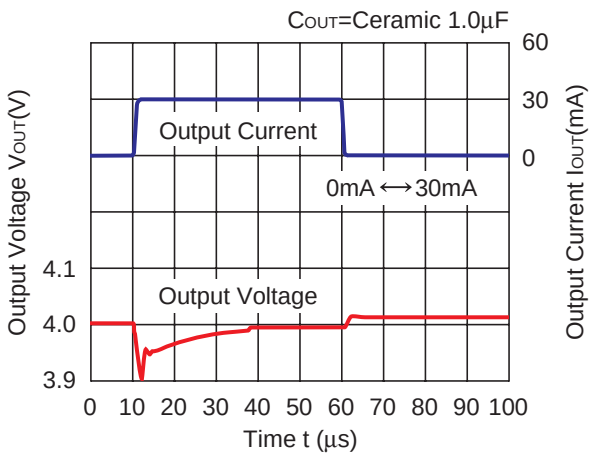

4.0V (VR1/VR2)

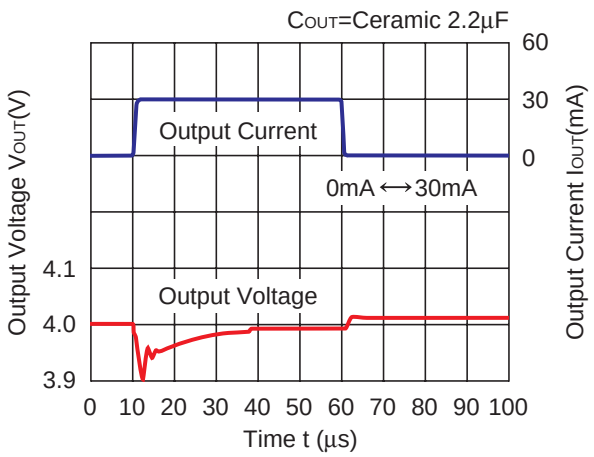

4.0V (VR1/VR2)

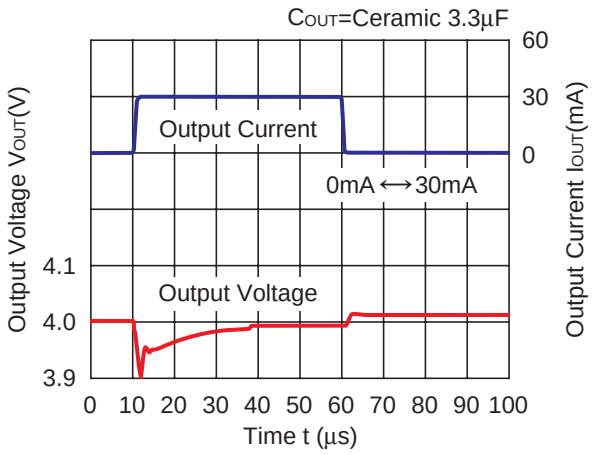

4.0V (VR1/VR2)

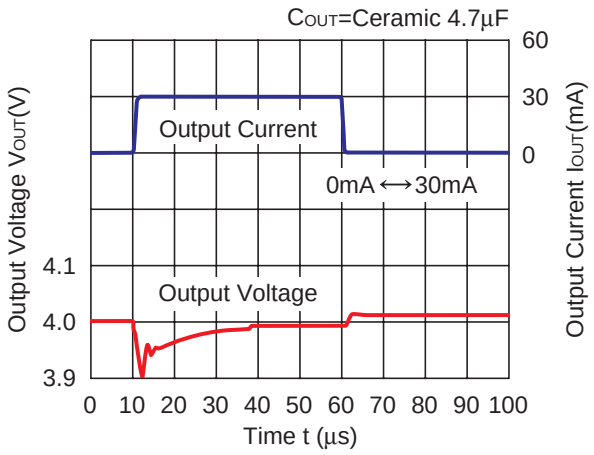

4.0V (VR1/VR2)

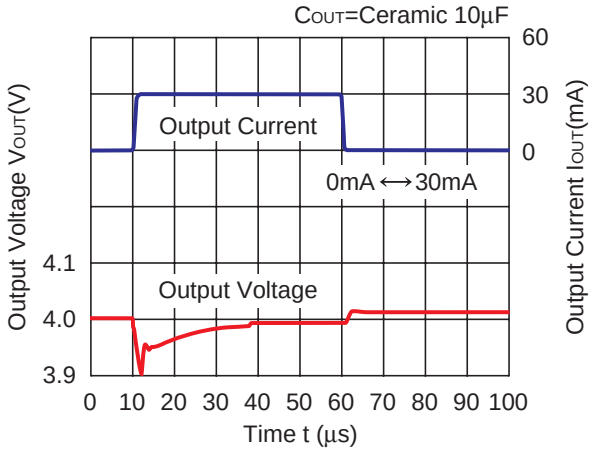

4.0V (VR1/VR2)

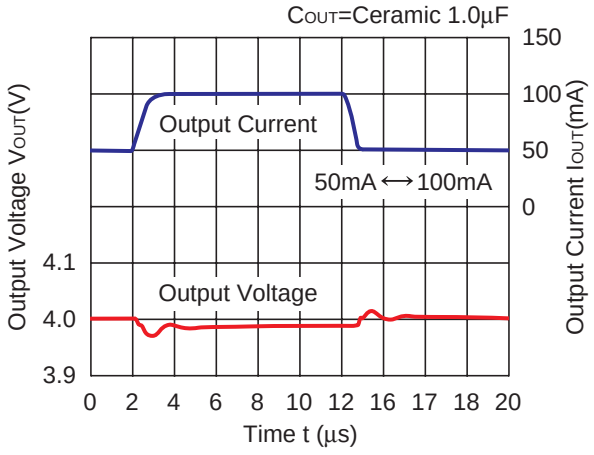

14) Load Transient Response2 (tr=tf=0.5µs, CIN=1.0µF)

2.8V(VR1/VR2)

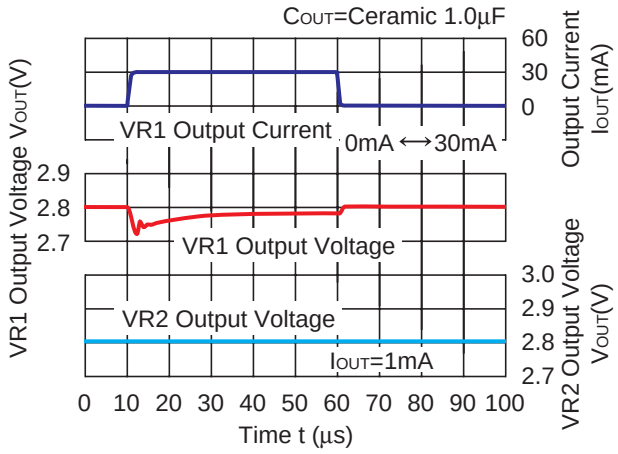

2.8V(VR1/VR2)

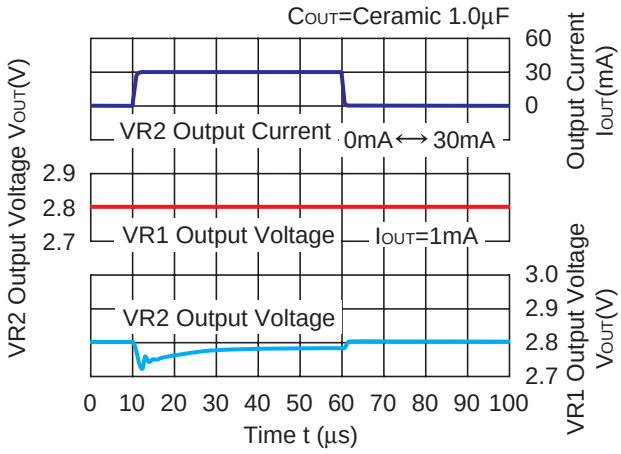

2.8V(VR1/VR2)

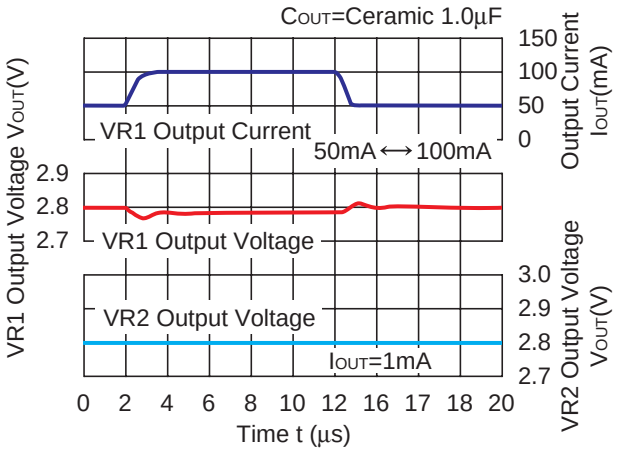

2.8V(VR1/VR2)

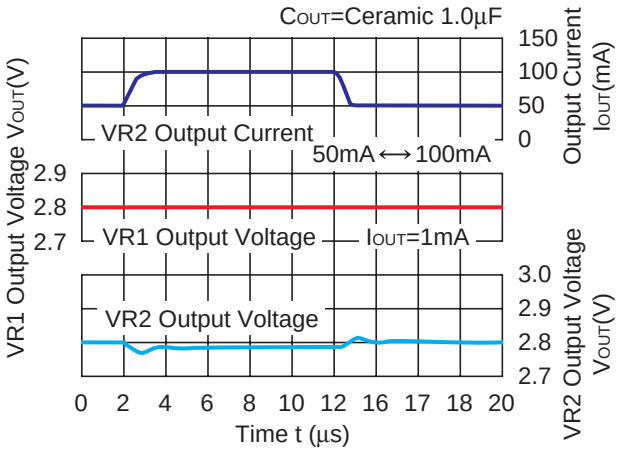

15) Load Transient Response3 (tr=tf=10ns)

3.0V(VR1/VR2)

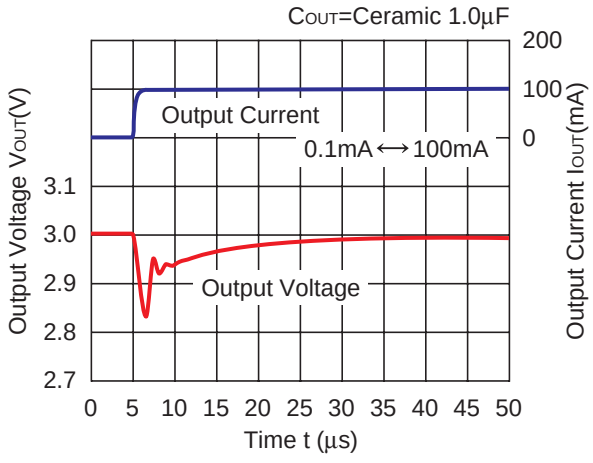

16) Turn on speed with CE Pin (C_{IN}=Ceramic 1.0µF)

0.8V(VR1/VR2)

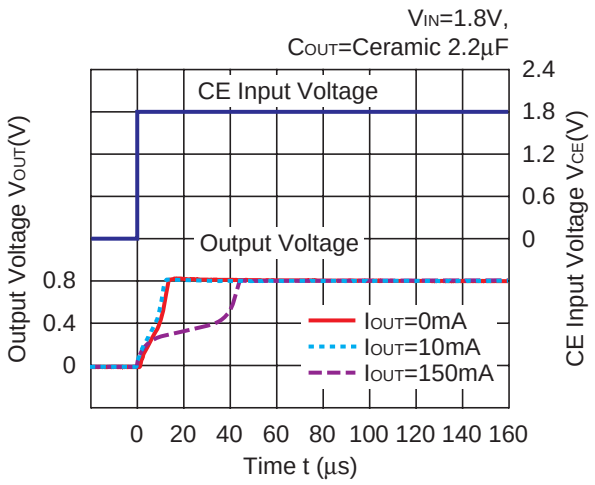

1.5V(VR1/VR2)

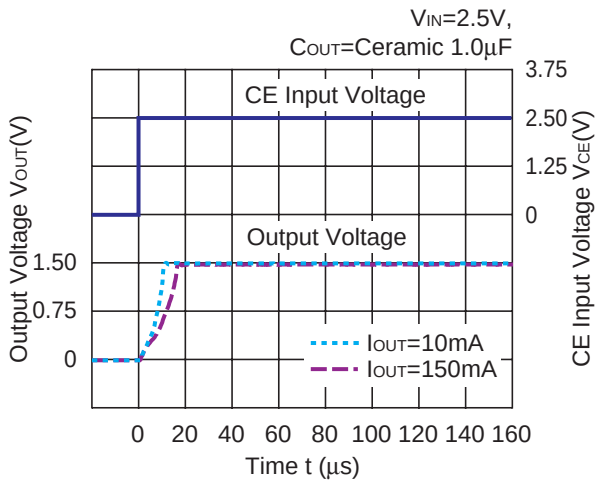

2.8V(VR1/VR2)

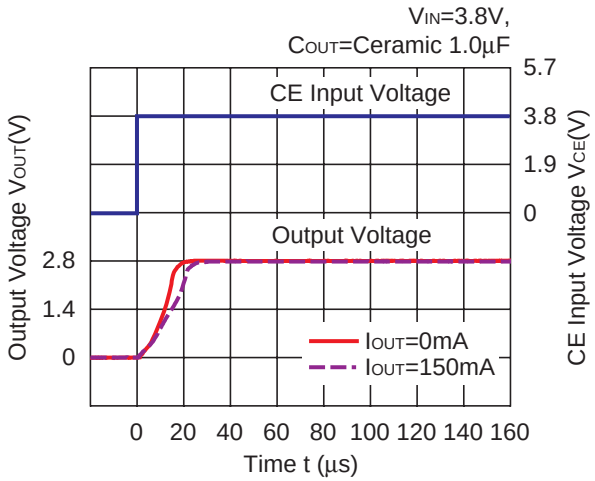

4.0V(VR1/VR2)

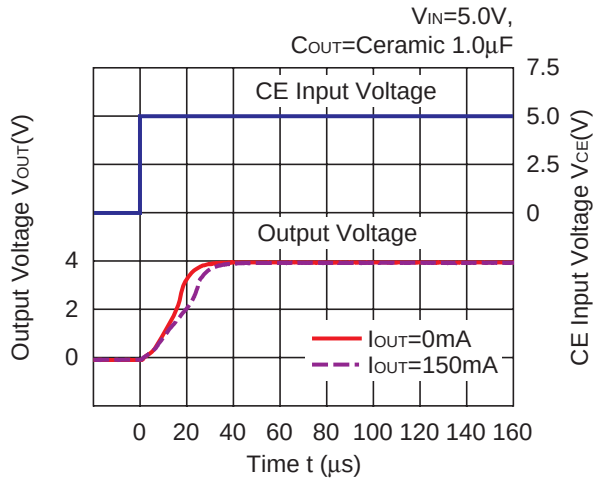

17) Turn off speed with CE Pin (C_{IN}=Ceramic 1.0µF)

0.8V(VR1/VR2)

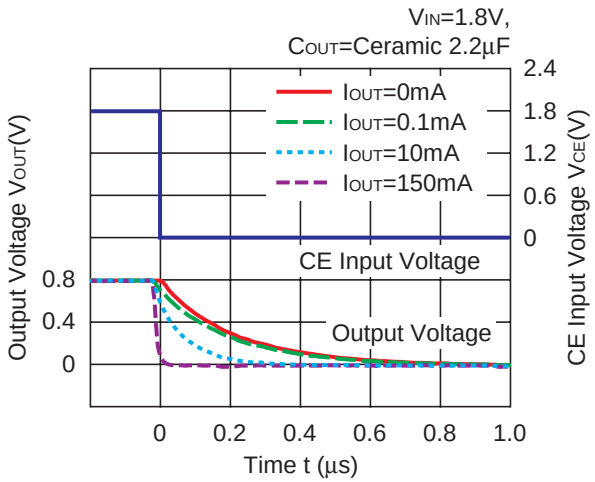

1.5V(VR1/VR2)

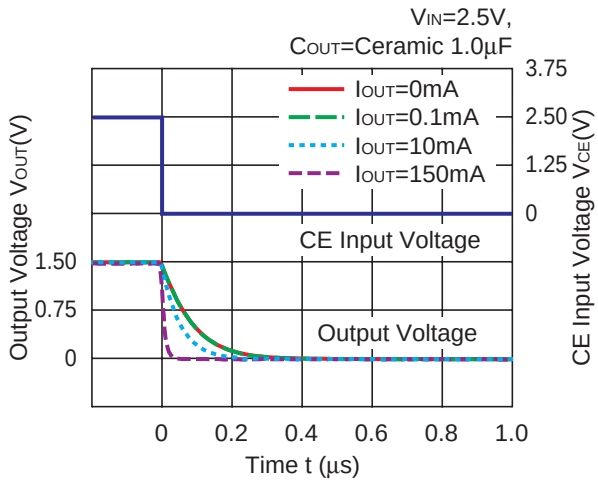

2.8V(VR1/VR2)

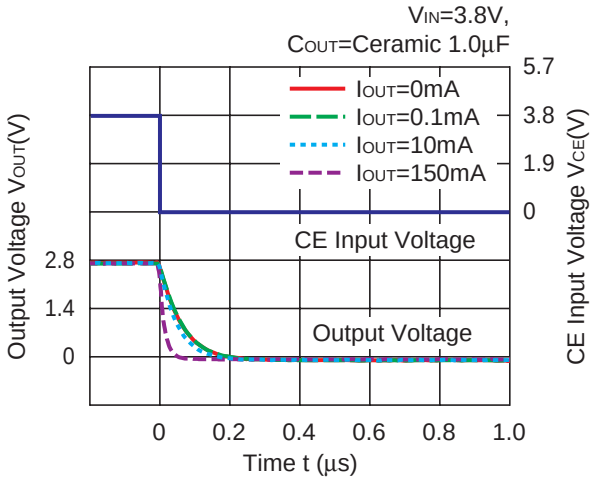

4.0V(VR1/VR2)

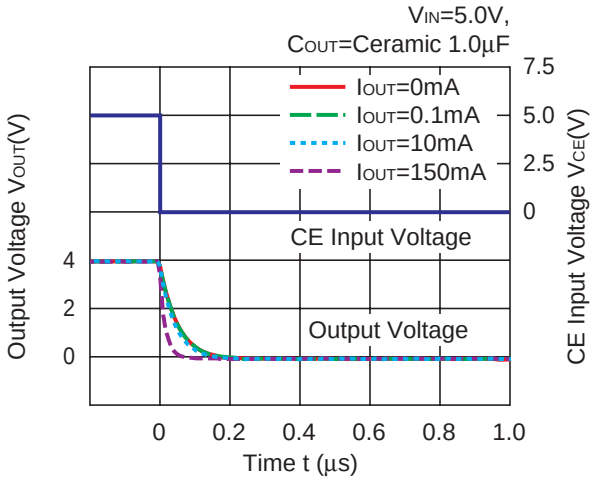

ESR vs. Output Current

Ceramic type output capacitor is recommended for this series; however, the other output capacitors with low ESR also can be used. The relations between I_{OUT} (Output Current) and ESR of an output capacitor are shown below. The conditions when the white noise level is under 40μV (Avg.) are marked as the hatched area in the graph

Measurement conditions

Frequency Band : 10Hz to 2MHz
Temperature : –40°C to 85°C

0.8V(VR1/VR2)

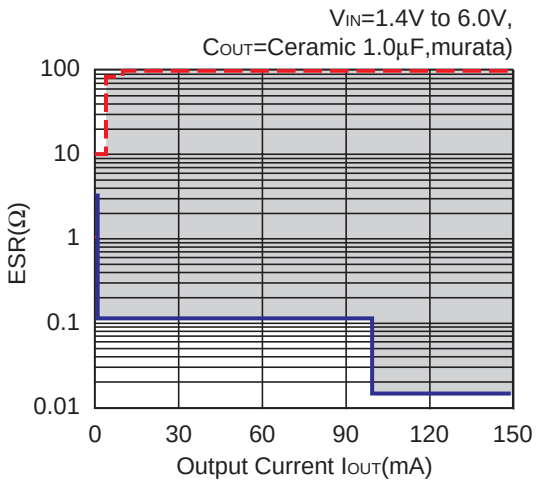

0.8V(VR1/VR2)

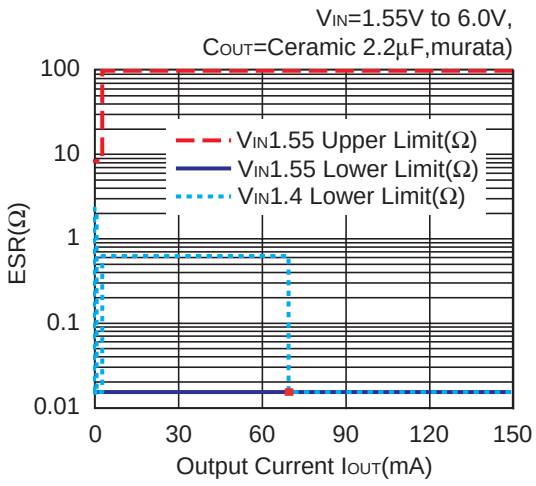

0.8V(VR1/VR2)

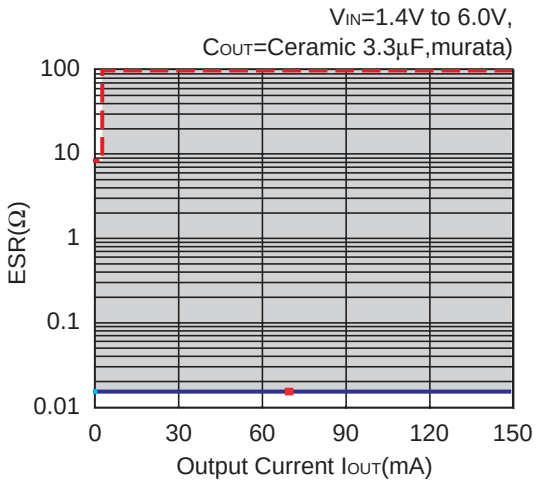

1.0V(VR1/VR2)

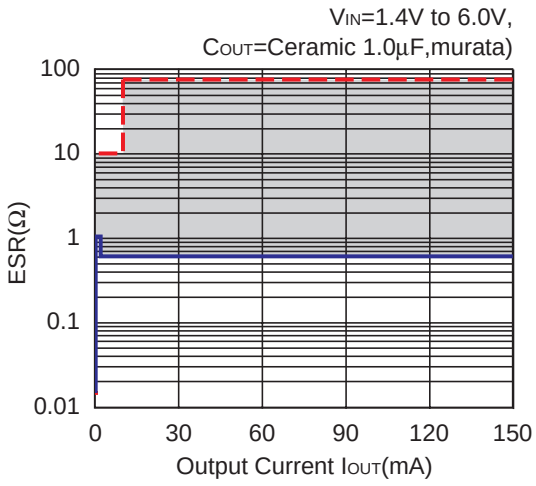

1.0V(VR1/VR2)

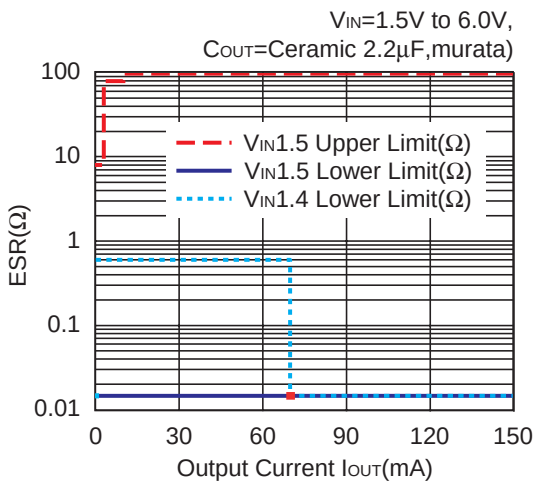

1.2V(VR1/VR2)

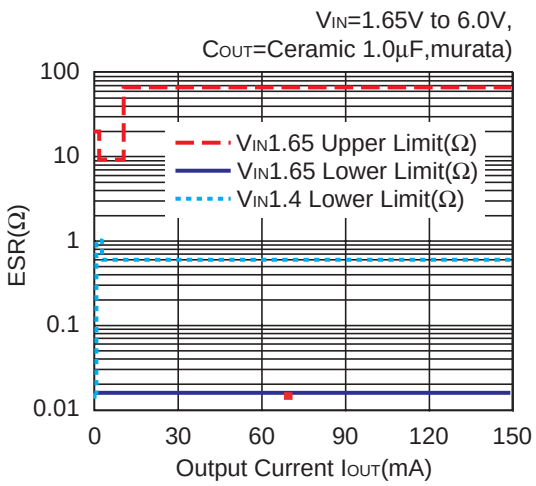

1.2V(VR1/VR2)

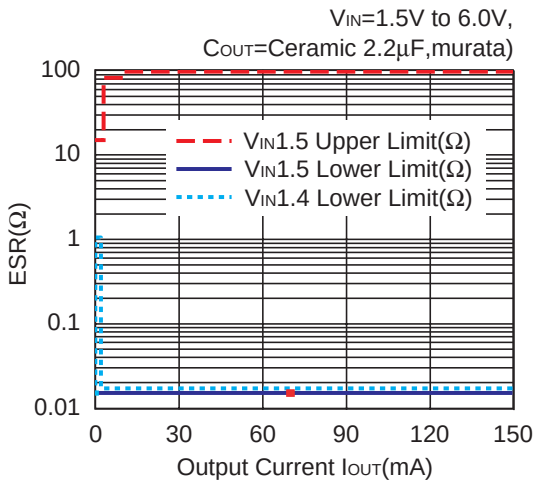

1.2V(VR1/VR2)

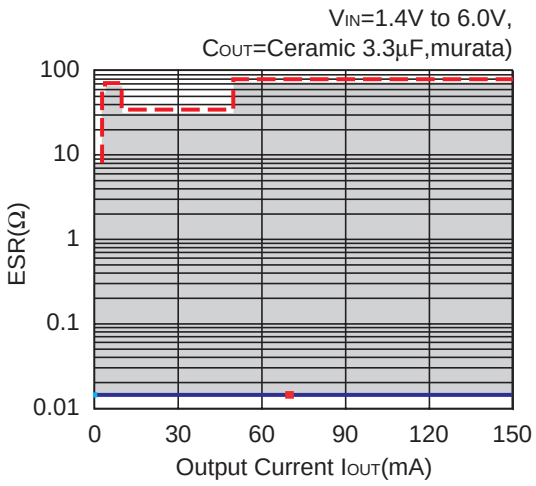

2.8V(VR1/VR2)

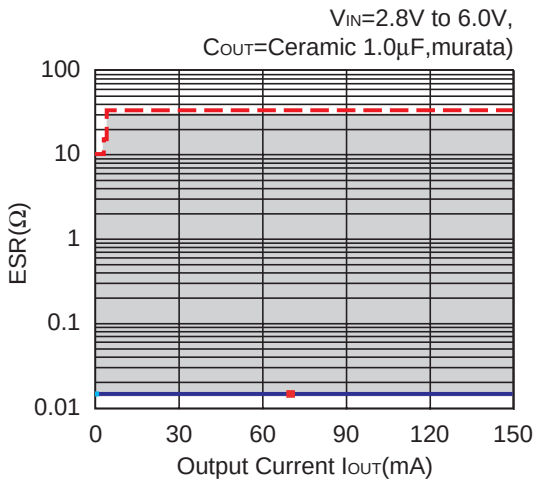

4.0V(VR1/VR2)

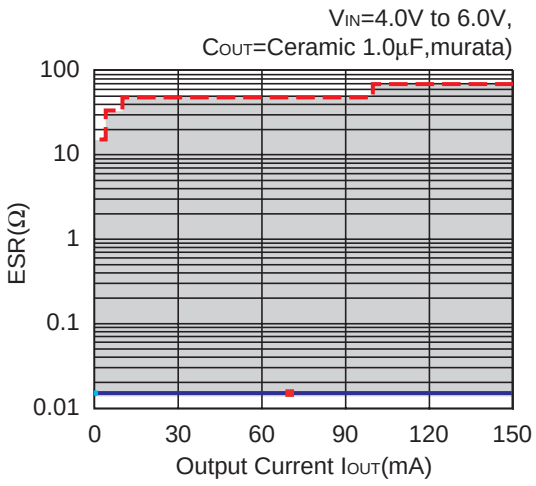

∗R5326N (SOT-23-6) and R5326Z (WLCSP-6-P1) are the discontinued product. As of June in 2016.

R5326x

0.8V(VR1/VR2)

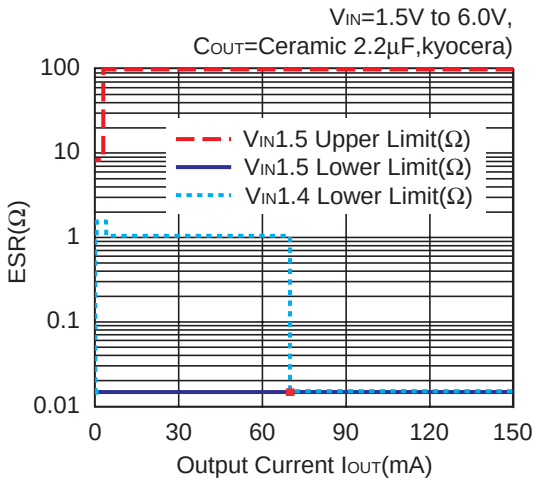

1.0V(VR1/VR2)

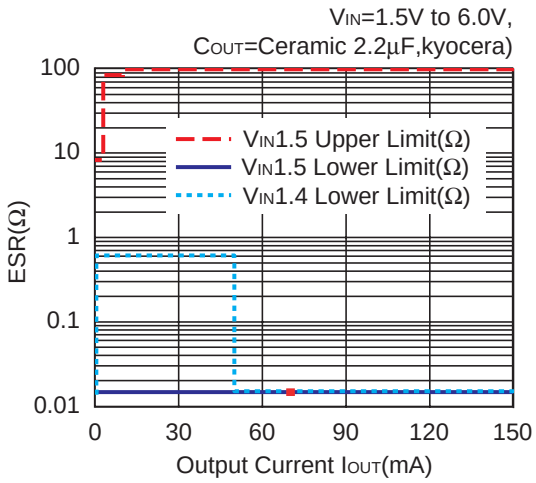

1.2V(VR1/VR2)

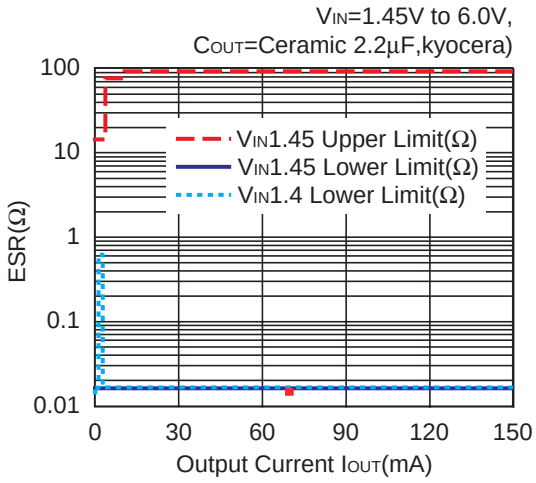

1. The products and the product specifications described in this document are subject to change or discontinuation of production without notice for reasons such as improvement. Therefore, before deciding to use the products, please refer to our sales representatives for the latest information thereon.
2. The materials in this document may not be copied or otherwise reproduced in whole or in part without prior written consent of our company.
3. Please be sure to take any necessary formalities under relevant laws or regulations before exporting or otherwise taking out of your country the products or the technical information described herein.
4. The technical information described in this document shows typical characteristics of and example application circuits for the products. The release of such information is not to be construed as a warranty of or a grant of license under our company's or any third party's intellectual property rights or any other rights.
5. The products listed in this document are intended and designed for use as general electronic components in standard applications (office equipment, telecommunication equipment, measuring instruments, consumer electronic products, amusement equipment etc.). Those customers intending to use a product in an application requiring extreme quality and reliability, for example, in a highly specific application where the failure or misoperation of the product could result in human injury or death (aircraft, spacevehicle, nuclear reactor control system, traffic control system, automotive and transportation equipment, combustion equipment, safety devices, life support system etc.) should first contact us.
6. We are making our continuous effort to improve the quality and reliability of our products, but semiconductor products are likely to fail with certain probability. In order to prevent any injury to persons or damages to property resulting from such failure, customers should be careful enough to incorporate safety measures in their design, such as redundancy feature, fire containment feature and fail-safe feature. We do not assume any liability or responsibility for any loss or damage arising from misuse or inappropriate use of the products.
7. Anti-radiation design is not implemented in the products described in this document.
8. The X-ray exposure can influence functions and characteristics of the products. Confirm the product functions and characteristics in the evaluation stage.
9. WLCSP products should be used in light shielded environments. The light exposure can influence functions and characteristics of the products under operation or storage.
10. There can be variation in the marking when different AOI (Automated Optical Inspection) equipment is used. In the case of recognizing the marking characteristic with AOI, please contact our sales or our distributor before attempting to use AOI.
11. Please contact our sales representatives should you have any questions or comments concerning the products or the technical information.

NISSHINBO

Nisshinbo Micro Devices Inc.

Official website
https://www.nisshinbo-microdevices.co.jp/en/
Purchase information
https://www.nisshinbo-microdevices.co.jp/en/buy/

ENTEGRECİ

Bu belge www.entegreci.com üzerinden sunulmaktadır.

Elektronik komponent tedarikinde Entegreci

Entegreci, Eskişehir merkezli, Türkiye geneline satış yapan bir elektronik komponent mağazasıdır. Entegreler (IC), mikrodenetleyiciler, transistörler, diyotlar, pasif elemanlar, konnektörler, modüller ve geliştirme kartları tek adetten seri üretim adetlerine kadar satılır. Ürün sayfalarında güncel stok durumunu, fiyatı ve datasheet bağlantısını bulabilirsiniz.

Parça koduyla arama

Üretici parça numarasını yazın; stok ve fiyatı hemen görün.

www.entegreci.com

Ürün kategorileri

Entegreden kapasitöre tüm elektronik komponent kategorileri.

Kategorilere göz atın

Üreticiler

Aradığınız üreticinin ürünlerini tek sayfada inceleyin.

Üreticileri görün

Toplu alım ve teklif

Listede olmayan ya da yüksek adetli parçalar için teklif isteyin.

Teklif isteyin

www.entegreci.com | **destek@entegreci.com** | **0850 305 90 34**

Entegreci is an online electronic components store based in Türkiye. Search by manufacturer part number to see stock, prices and datasheets for integrated circuits, microcontrollers, transistors, passive components and connectors, or request a quote for parts that are not listed.

Bu sayfa Entegreci tarafından eklenmiştir. Belgenin önceki sayfaları asıl yayıncısına aittir ve içeriği değiştirilmemiştir; en güncel sürüm için belgenin yayıncısına başvurun.