VOLTAGE REGULATOR

NO. EA-016-130402

OUTLINE

The Rx5RE Series are CMOS-based voltage regulator ICs with high output voltage accuracy and ultra-low quiescent current. Each of these ICs consists of a voltage reference unit, an error amplifier, a driver transistor, and resistors for setting output voltage, and a current limit circuit. By use of these ICs, a constant voltage power supply circuit with high efficiency can be constructed because the dropout voltage and quiescent current of these ICs are very small. Furthermore, theses ICs have a built-in current limit circuit. The output voltage of these ICs is fixed with high accuracy.

Two types of packages, TO-92 (Discontinued) and SOT-89 (Mini-power Mold) are available.

FEATURES

- Supply Current ..... Typ. 1.1μA (V_{OUT}=3.0V, V_{IN}=5.0V)
- Dropout Voltage ..... Typ. 0.5V (I_{OUT}=60mA, V_{OUT}=2.8V)
- Output Current ..... Typ. 120mA (V_{OUT}=5.0V)
- Input Voltage Range ..... Max. 10.0V
- Output Voltage Range ..... 2.0V to 6.0V (0.1V steps)
  (For other voltages, please refer to MARK INFORMATIONS.)
- Output Voltage Accuracy ..... ±2.5%
- Temperature-Drift Coefficient of Output Voltage ..... Typ. ± 100ppm/°C
- Line Regulation ..... Typ. 0.1%/V
- Packages ..... SOT-89 (Mini-power Mold),TO-92 (Discontinued)

APPLICATIONS

- Power source for battery-powered equipment
- Power source for cameras, video instruments such as camcorders, VCRs, and hand- held communication equipment
- Precision voltage references

BLOCK DIAGRAMS

Rx5RE

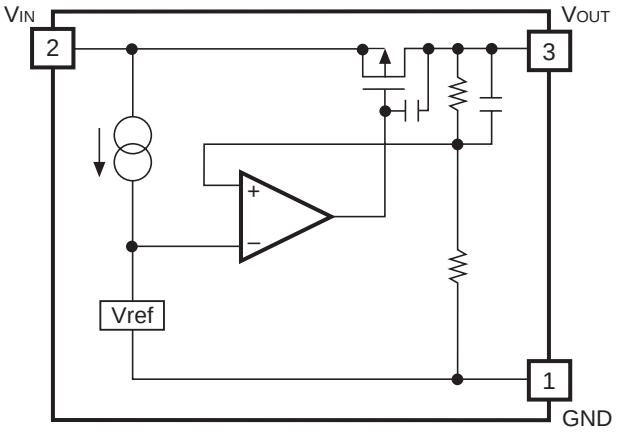

SELECTION GUIDE

The output voltage and package for the ICs can be selected at the user's request.

Product Name	Package	Quantity per Reel	Pb Free	Halogen Free
RH5RExxAA-T1-FE	SOT-89	1,000 pcs	Yes	Yes
RE5RExxAA-TZ-F	TO-92 (Discontinued)	2,500 pcs	Yes	No

xx: The output voltage can be designated in the range from 2.0V (20) to 6.0V (60) in 0.1V steps.
(For other voltages, please refer to MARK INFORMATIONS.)

PIN CONFIGURATION

● **SOT-89**

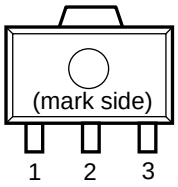

● **TO-92**

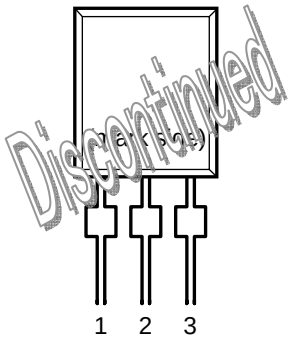

Discontinued

PIN DESCRIPTION

● **SOT-89**

Pin No	Symbol	Pin Description
1	GND	Ground Pin
2	V_{IN}	Input Pin
3	V_{OUT}	Output Pin

● **TO-92 (Discontinued)**

Pin No	Symbol	Pin Description
1	GND	Ground Pin
2	V_{IN}	Input Pin
3	V_{OUT}	Output Pin

ABSOLUTE MAXIMUM RATINGS

Symbol	Item	Rating	Unit
V_{IN}	Input Voltage	12	V
V_{OUT}	Output Voltage	–0.3 to V_{IN}+0.3	V
I_{OUT}	Output Current	300	mA
P_D	Power Dissipation* (SOT-89)	900	mW
	Power Dissipation* (TO-92) (Discontinued)	300	
Topt	Operating Temperature Range	–40 to 85	°C
Tstg	Storage Temperature Range	–55 to 125	°C
Tsolder	Lead Temperature (Soldering)	260°C,10s	

∗) For Power Dissipation, please refer to PACKAGE INFORMATION.

ABSOLUTE MAXIMUM RATINGS

Electronic and mechanical stress momentarily exceeded absolute maximum ratings may cause the permanent damages and may degrade the life time and safety for both device and system using the device in the field.
The functional operation at or over these absolute maximum ratings is not assured.

RECOMMENDED OPERATING CONDITIONS (ELECTRICAL CHARACTERISTICS)

All of electronic equipment should be designed that the mounted semiconductor devices operate within the recommended operating conditions. The semiconductor devices cannot operate normally over the recommended operating conditions, even if when they are used over such conditions by momentary electronic noise or surge. And the semiconductor devices may receive serious damage when they continue to operate over the recommended operating conditions.

ELECTRICAL CHARACTERISTICS

• Rx5RE20A

Topt=25°C

Symbol	Item	Conditions	Min.	Typ.	Max.	Unit
V_{OUT}	Output Voltage	V_{IN}=4.0V,I_{OUT}=10mA	1.950	2.000	2.050	V
I_{OUT}	Output Current	V_{IN}=4.0V	40	60		mA
$\frac{\Delta V_{OUT}}{\Delta I_{OUT}}$	Load Regulation	V_{IN}=4.0V 1mA≤I_{OUT}≤50mA		40	80	mV
V_{DIF}	Dropout Voltage	I_{OUT}=30mA		0.5	0.7	V
I_{SS}	Quiescent Current	V_{IN}=4.0V		1.0	3.0	µA
$\frac{\Delta V_{OUT}}{\Delta V_{IN}}$	Line Regulation	I_{OUT}=10mA V_{OUT}+1.0V≤V_{IN}≤10V		0.1		%/V
V_{IN}	Input Voltage				10	V
Ilim	Current Limit			240		mA
$\frac{\Delta V_{OUT}}{\Delta Topt}$	Output Voltage Temperature Coefficient	I_{OUT}=10mA –40°C≤Topt≤85°C		±100		ppm/°C

• Rx5RE30A

Topt=25°C

Symbol	Item	Conditions	Min.	Typ.	Max.	Unit
V_{OUT}	Output Voltage	V_{IN}=5.0V,I_{OUT}=10mA	2.925	3.000	3.075	V
I_{OUT}	Output Current	V_{IN}=5.0V	50	80		mA
$\frac{\Delta V_{OUT}}{\Delta I_{OUT}}$	Load Regulation	V_{IN}=5.0V 1mA≤I_{OUT}≤60mA		40	80	mV
V_{DIF}	Dropout Voltage	I_{OUT}=40mA		0.5	0.7	V
I_{SS}	Quiescent Current	V_{IN}=5.0V		1.1	3.3	µA
$\frac{\Delta V_{OUT}}{\Delta V_{IN}}$	Line Regulation	I_{OUT}=10mA V_{OUT}+1.0V≤V_{IN}≤10V		0.1		%/V
V_{IN}	Input Voltage				10	V
Ilim	Current Limit			240		mA
$\frac{\Delta V_{OUT}}{\Delta Topt}$	Output Voltage Temperature Coefficient	I_{OUT}=10mA –40°C≤Topt≤85°C		±100		ppm/°C

• **Rx5RE40A**

Topt=25°C

Symbol	Item	Conditions	Min.	Typ.	Max.	Unit
V_{OUT}	Output Voltage	V_{IN}=6.0V,I_{OUT}=10mA	3.900	4.000	4.100	V
I_{OUT}	Output Current	V_{IN}=6.0V	65	100		mA
$\frac{\Delta V_{OUT}}{\Delta I_{OUT}}$	Load Regulation	V_{IN}=6.0V 1mA≤I_{OUT}≤70mA		40	80	mV
V_{DIF}	Dropout Voltage	I_{OUT}=50mA		0.5	0.7	V
I_{SS}	Quiescent Current	V_{IN}=6.0V		1.2	3.6	µA
$\frac{\Delta V_{OUT}}{\Delta V_{IN}}$	Line Regulation	I_{OUT}=10mA V_{OUT}+1.0V≤V_{IN}≤10V		0.1		%/V
V_{IN}	Input Voltage				10	V
Ilim	Current Limit			240		mA
$\frac{\Delta V_{OUT}}{\Delta Topt}$	Output Voltage Temperature Coefficient	I_{OUT}=10mA –40°C≤Topt≤85°C		±100		ppm/°C

• **Rx5RE50A**

Topt=25°C

Symbol	Item	Conditions	Min.	Typ.	Max.	Unit
V_{OUT}	Output Voltage	V_{IN}=7.0V,I_{OUT}=10mA	4.875	5.000	5.125	V
I_{OUT}	Output Current	V_{IN}=7.0V	80	120		mA
$\frac{\Delta V_{OUT}}{\Delta I_{OUT}}$	Load Regulation	V_{IN}=7.0V 1mA≤I_{OUT}≤80mA		40	80	mV
V_{DIF}	Dropout Voltage	I_{OUT}=60mA		0.5	0.7	V
I_{SS}	Quiescent Current	V_{IN}=7.0V		1.3	3.9	µA
$\frac{\Delta V_{OUT}}{\Delta V_{IN}}$	Line Regulation	I_{OUT}=10mA V_{OUT}+1.0V≤V_{IN}≤10V		0.1		%/V
V_{IN}	Input Voltage				10	V
Ilim	Current Limit			240		mA
$\frac{\Delta V_{OUT}}{\Delta Topt}$	Output Voltage Temperature Coefficient	I_{OUT}=10mA –40°C≤Topt≤85°C		±100		ppm/°C

• **Rx5RE60A**

Topt=25°C

Symbol	Item	Conditions	Min.	Typ.	Max.	Unit
V_{OUT}	Output Voltage	V_{IN}=8.0V,I_{OUT}=10mA	5.850	6.000	6.150	V
I_{OUT}	Output Current	V_{IN}=8.0V	80	120		mA
$\frac{\Delta V_{OUT}}{\Delta I_{OUT}}$	Load Regulation	V_{IN}=8.0V 1mA≤I_{OUT}≤80mA		40	80	mV
V_{DIF}	Dropout Voltage	I_{OUT}=60mA		0.5	0.7	V
I_{SS}	Quiescent Current	V_{IN}=8.0V		1.4	4.2	µA
$\frac{\Delta V_{OUT}}{\Delta V_{IN}}$	Line Regulation	I_{OUT}=10mA V_{OUT}+1.0V≤V_{IN}≤10V		0.1		%/V
V_{IN}	Input Voltage				10	V
Ilim	Current Limit			240		mA
$\frac{\Delta V_{OUT}}{\Delta Topt}$	Output Voltage Temperature Coefficient	I_{OUT}=10mA –40°C≤Topt≤85°C		±100		ppm/°C

ELECTRICAL CHARACTERISTICS BY OUTPUT VOLTAGE

Part Number	Output Voltage				OutputCurrent			Load Regulation			Dropout Voltage		
	V_{OUT}(V)				I_{OUT}(mA)			$\Delta V_{OUT}/\Delta I_{OUT}$(mV)			V_{DIF}(V)		
	Conditions	Min.	Typ.	Max.	Conditions	Min.	Typ.	Conditions	Typ.	Max.	Conditions	Typ.	Max.
Rx5RE20A	V_{IN}–V_{OUT}=2.0V I_{OUT}=10mA	1.950	2.000	2.050	V_{IN}–V_{OUT}=2.0V	40	60	V_{IN}–V_{OUT}=2.0V 1mA≤I_{OUT}≤50mA	40	80	I_{OUT}=30mA	0.5	0.7
Rx5RE21A		2.048	2.100	2.152									
Rx5RE22A		2.145	2.200	2.255									
Rx5RE23A		2.243	2.300	2.357									
Rx5RE24A		2.340	2.400	2.460									
Rx5RE25A		2.438	2.500	2.562				V_{IN}–V_{OUT}=2.0V 1mA≤I_{OUT}≤60mA			I_{OUT}=40mA		
Rx5RE26A		2.535	2.600	2.665									
Rx5RE27A		2.633	2.700	2.767									
Rx5RE28A		2.730	2.800	2.870									
Rx5RE29A		2.828	2.900	2.972									
Rx5RE30A		2.925	3.000	3.075		50	80						
Rx5RE31A		3.023	3.100	3.177									
Rx5RE32A		3.120	3.200	3.280									
Rx5RE33A		3.218	3.300	3.382									
Rx5RE34A		3.315	3.400	3.485									
Rx5RE35A		3.413	3.500	3.587				V_{IN}–V_{OUT}=2.0V 1mA≤I_{OUT}≤70mA			I_{OUT}=50mA		
Rx5RE36A		3.510	3.600	3.690									
Rx5RE37A		3.608	3.700	3.792									
Rx5RE38A		3.705	3.800	3.895									
Rx5RE39A		3.803	3.900	3.997									
Rx5RE40A		3.900	4.000	4.100		65	100						
Rx5RE41A		3.998	4.100	4.202									
Rx5RE42A		4.095	4.200	4.305									
Rx5RE43A		4.193	4.300	4.407									
Rx5RE44A		4.290	4.400	4.510									
Rx5RE45A		4.388	4.500	4.612									
Rx5RE46A		4.485	4.600	4.715									
Rx5RE47A		4.583	4.700	4.817									
Rx5RE48A		4.680	4.800	4.920									
Rx5RE49A		4.778	4.900	5.022				V_{IN}–V_{OUT}=2.0V 1mA≤I_{OUT}≤80mA			I_{OUT}=60mA		
Rx5RE50A		4.875	5.000	5.125		80	120						
Rx5RE51A		4.973	5.100	5.227									
Rx5RE52A		5.070	5.200	5.330									
Rx5RE53A		5.168	5.300	5.432									
Rx5RE54A		5.265	5.400	5.535									
Rx5RE55A		5.363	5.500	5.637									
Rx5RE56A		5.460	5.600	5.740									
Rx5RE57A		5.558	5.700	5.842									
Rx5RE58A		5.655	5.800	5.945									
Rx5RE59A		5.753	5.900	6.047									
Rx5RE60A		5.850	6.000	6.150									

Topt=25°C

Quiescent Current			Line Regulation		Input Voltage	Current Limit	Output Voltage Tempco.	
Iss(μA)			ΔVOUT/ΔVIN(%/V)		VIN(V)	Ilim(mA)	ΔVOUT/ΔT(ppm/°C)	
Conditions	Typ.	Max.	Conditions	Typ.	Max.	Typ.	Conditions	Typ.
VIN–VOUT =2.0V	1.0	3.0	IOUT =10mA VOUT+ 1.0V≤ VIN ≤10V	0.1	10	240	IOUT =10mA –40°C≤ Topt ≤85°C	±100
	1.1	3.3						
	1.2	3.6						
	1.3	3.9						
	1.4	4.2						

OPERATION

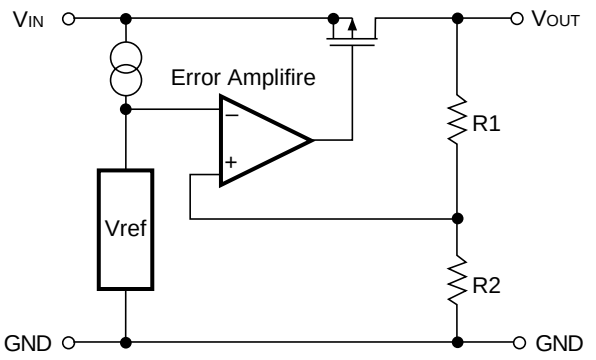

FIG. 1 Brock Diagram

Output voltage VOUT divided at the node between registers R1 and R2 is compared with reference voltage by error amplifier, so that a constant voltage is output.

TEST CIRCUITS

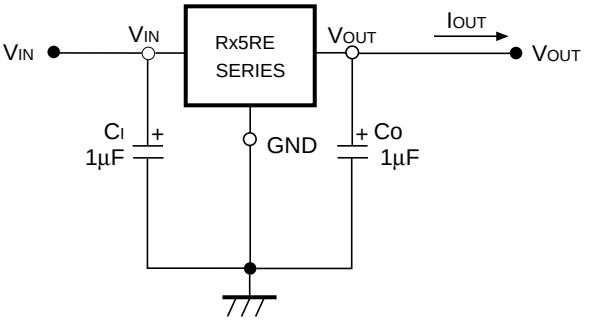

FIG. 2 Test Circuit

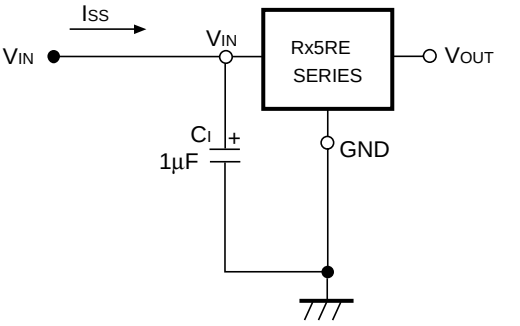

FIG. 3 Quiescent Current Test Circuit

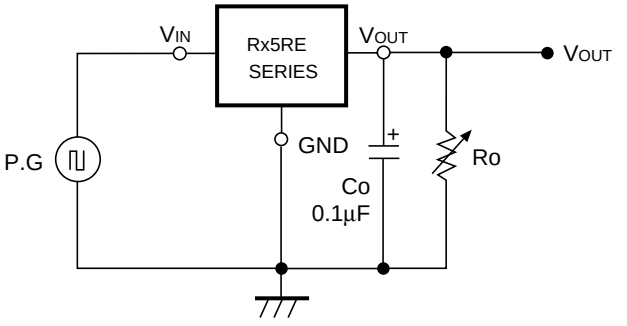

FIG. 4 Line Transient Response Test Circuit

TYPICAL CHARACTERISTICS

1) Output Voltage vs. Output Current

Rx5RE30A

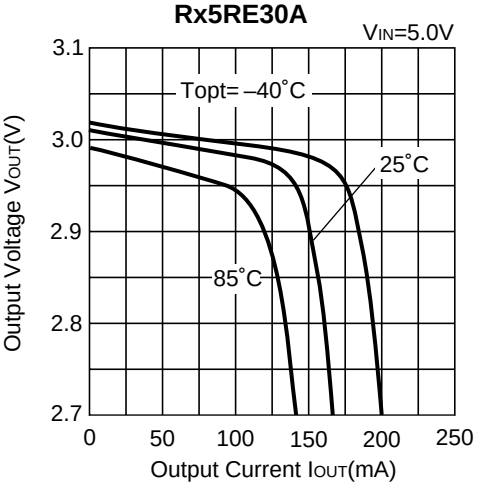

Rx5RE40A

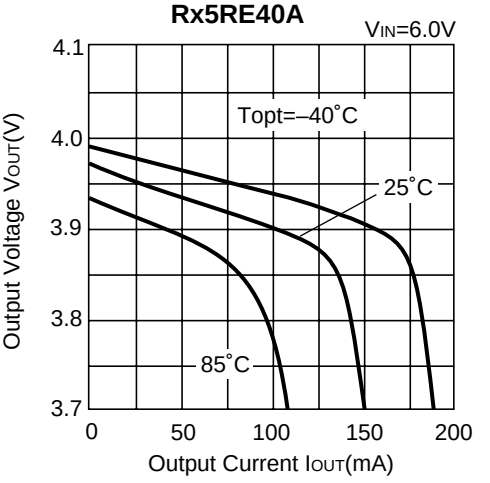

Rx5RE50A

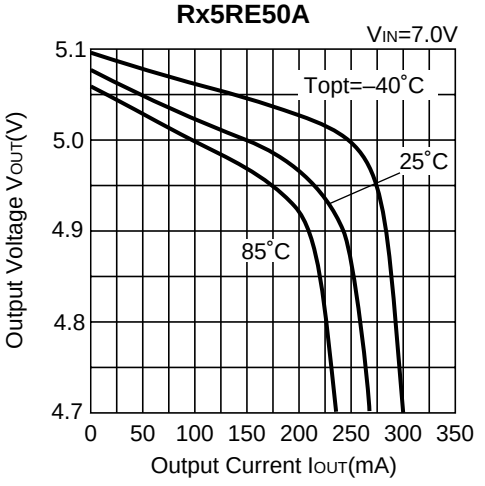

Rx5RE50A

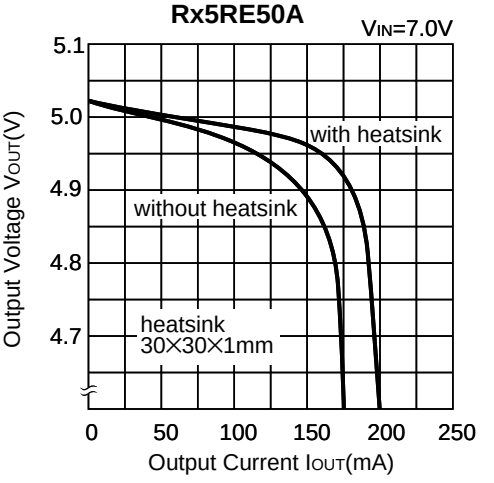

2) Output Voltage vs. Input Voltage

Rx5RE20A

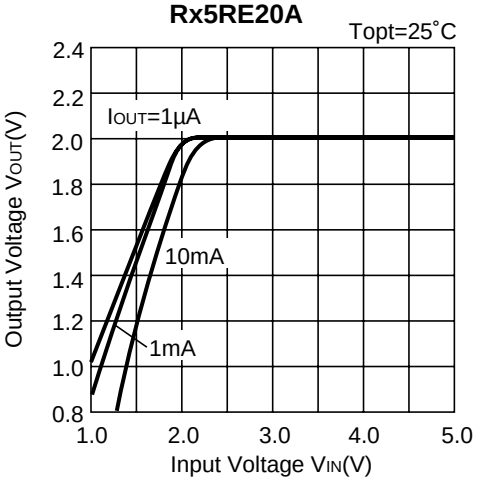

Rx5RE20A

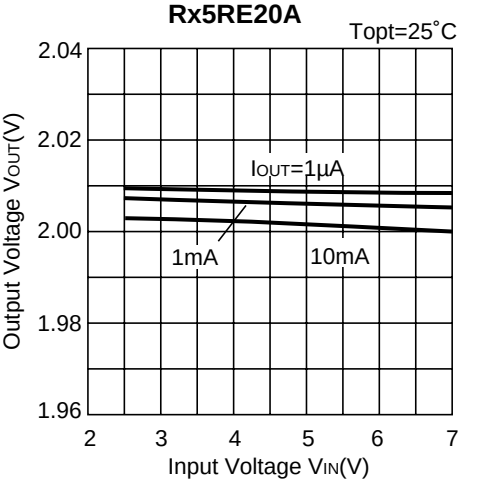

Rx5RE30A

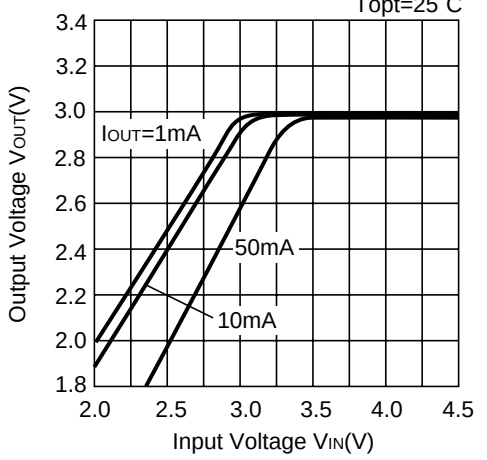

Rx5RE30A

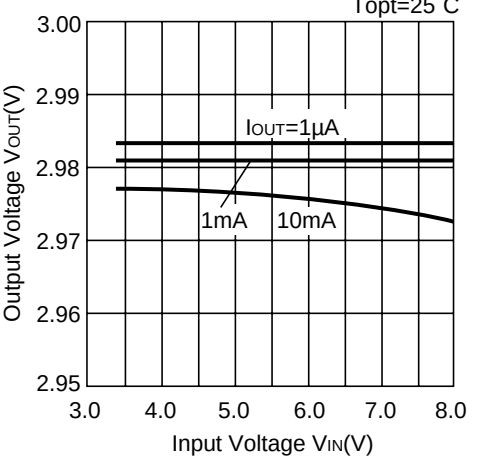

Rx5RE40A

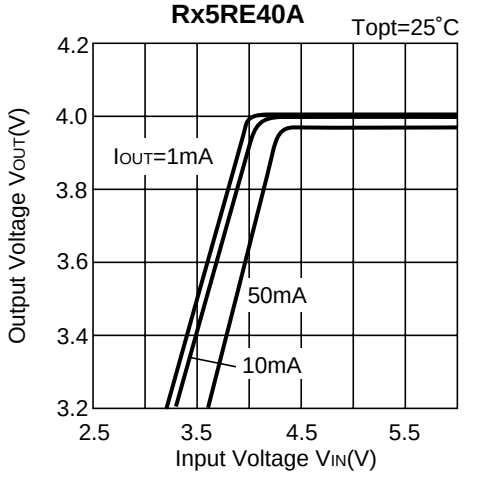

Rx5RE40A

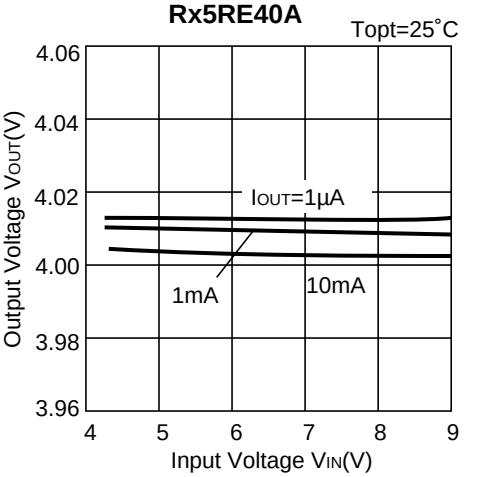

Rx5RE50A

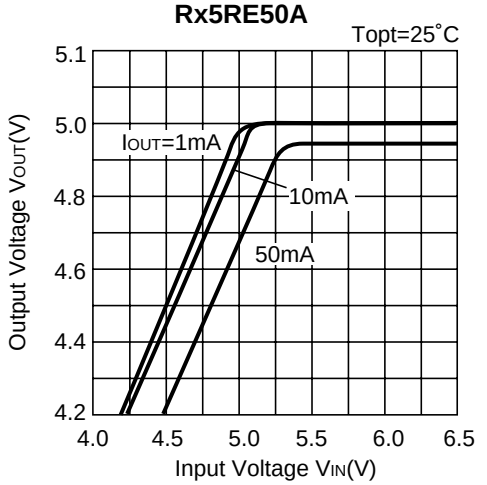

Rx5RE50A

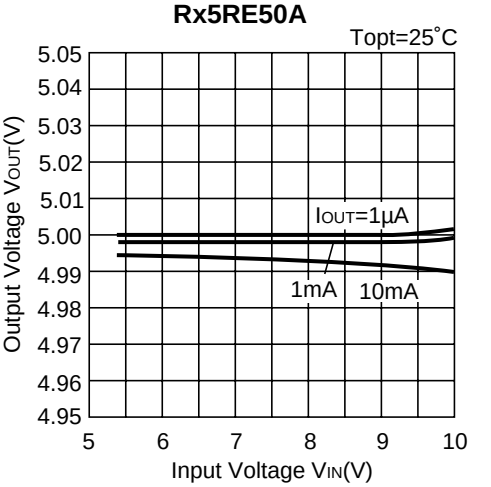

3) Dropout Voltage vs. Output Curret

Rx5RE30A

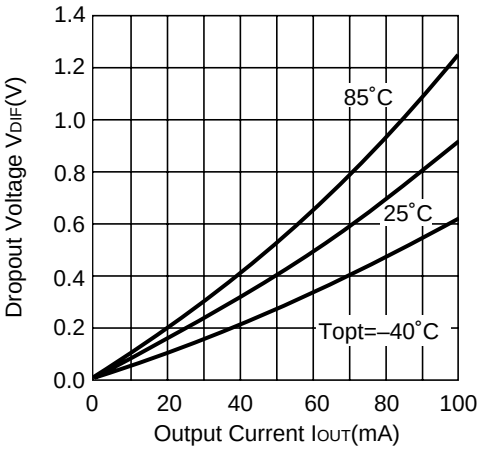

Rx5RE40A

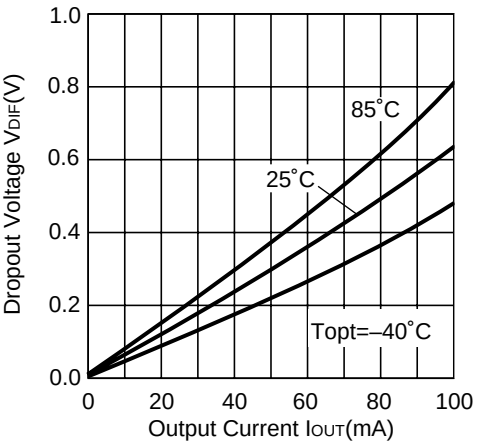

Rx5RE50A

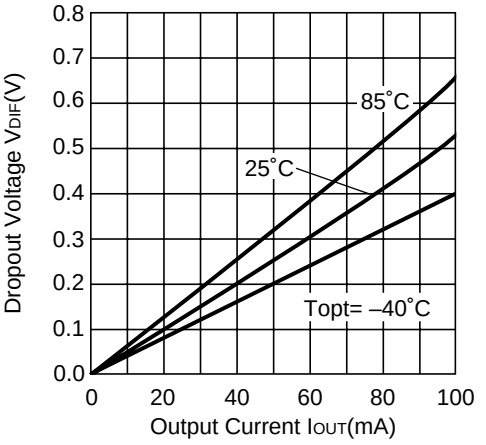

4) Output Voltage vs.Temperature

Rx5RE30A

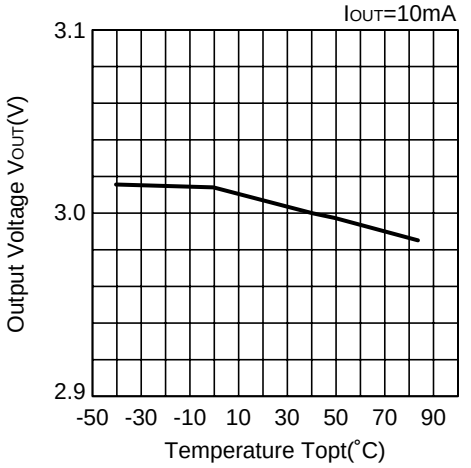

Rx5RE40A

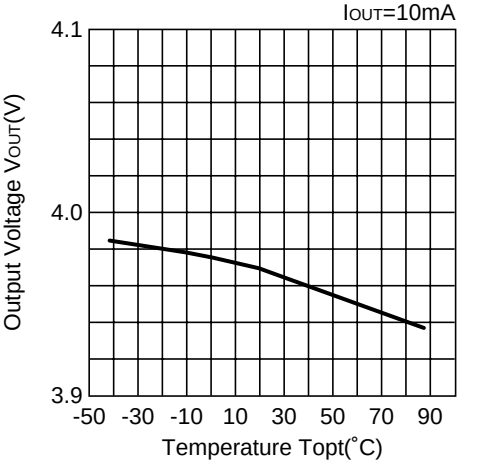

Rx5RE50A

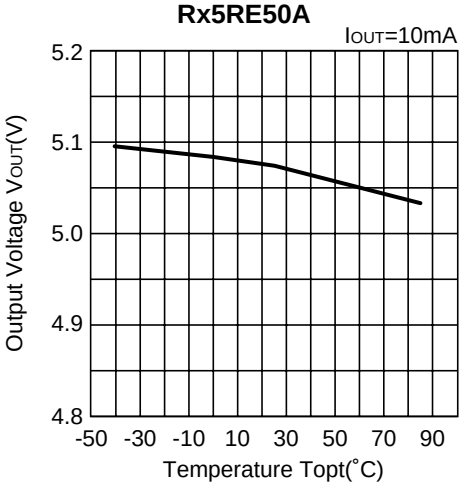

5) Quiescent Current vs. Input Voltage

Rx5RE20A

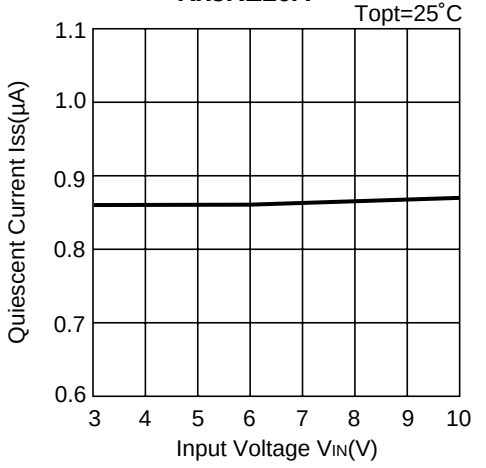

Rx5RE30A

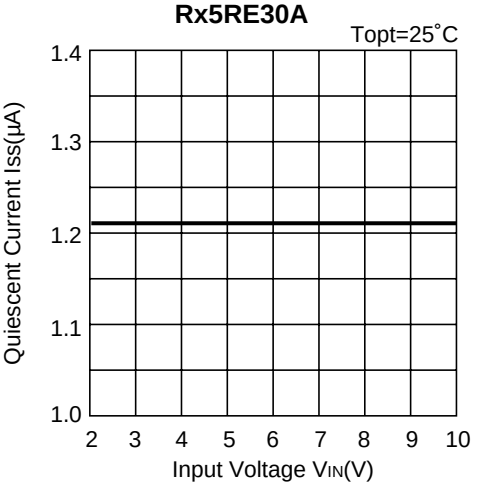

Rx5RE40A

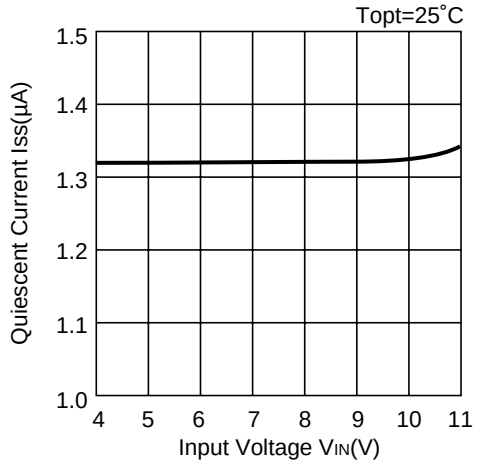

Rx5RE50A

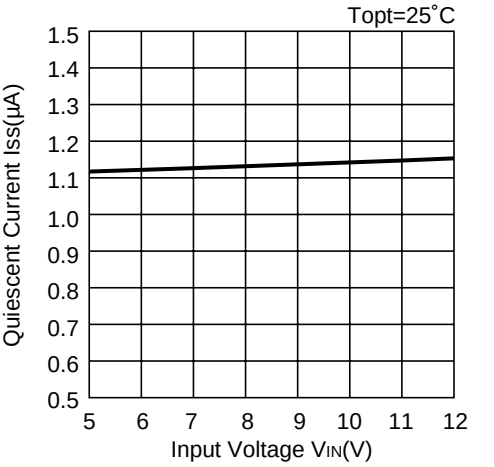

6) Quiescent Current vs. Temperature

Rx5RE20A

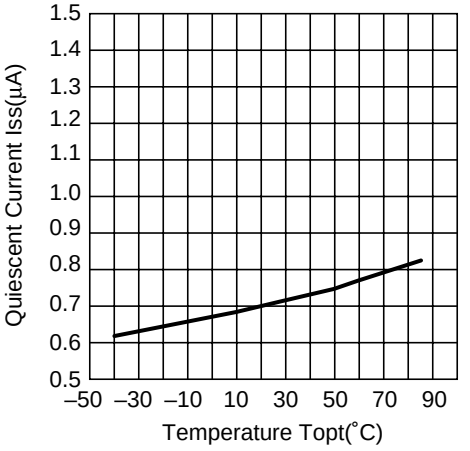

Rx5RE30A

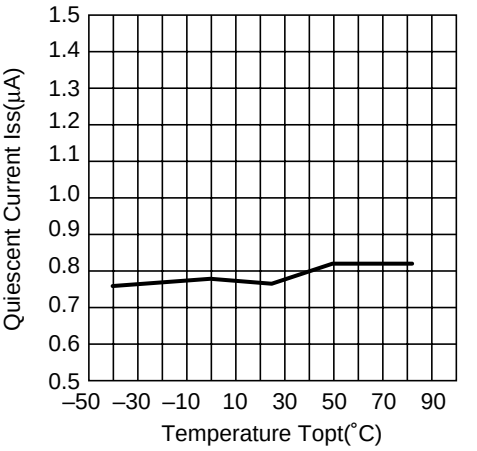

Rx5RE40A

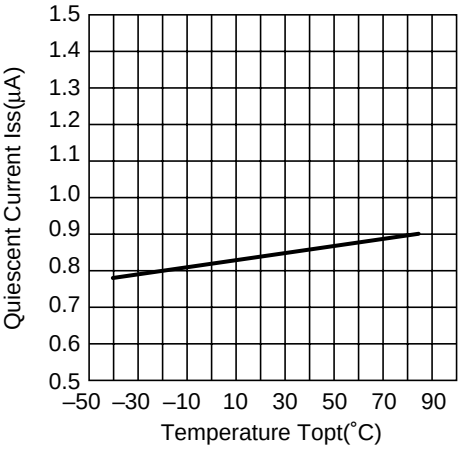

7) Dropout Voltage vs. Set Output Voltage

Rx5RE SERIES

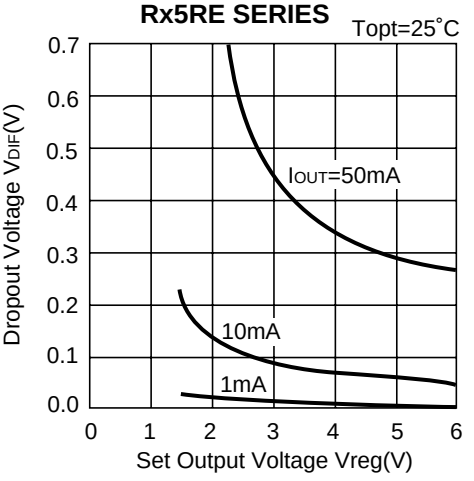

8) Line Transient Response (1)

Rx5RE20A

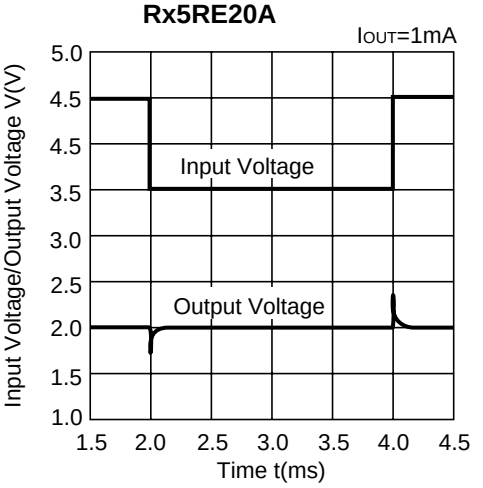

Rx5RE30A

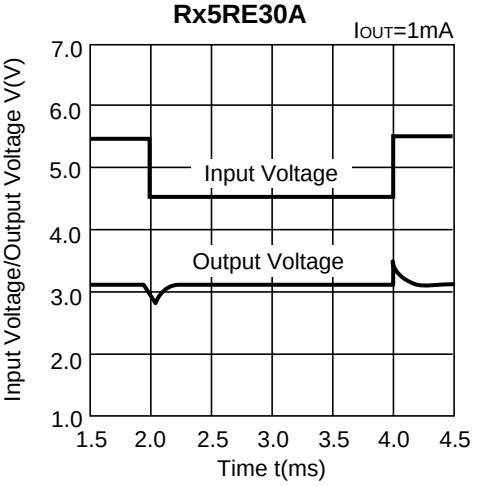

Rx5RE40A

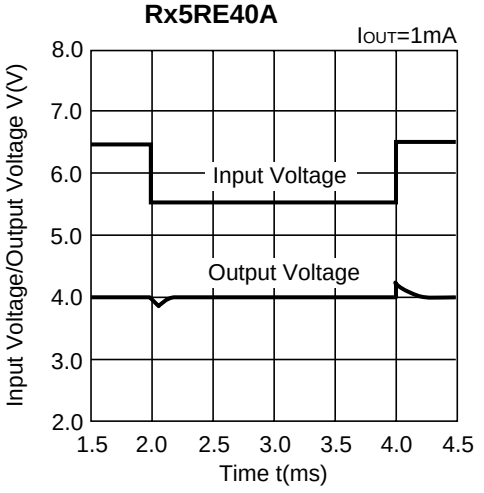

Rx5RE50A

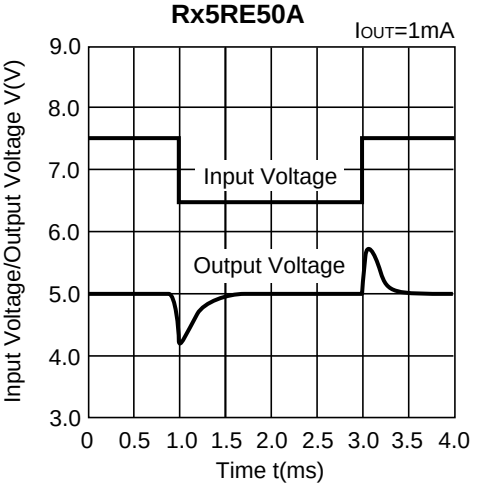

9) Line Transient Response (2)

Rx5RE20A

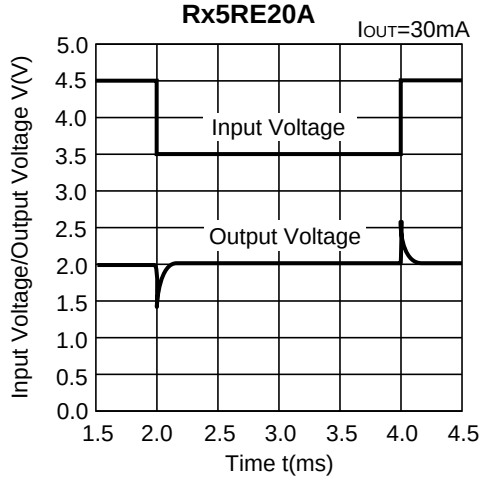

Rx5RE30A

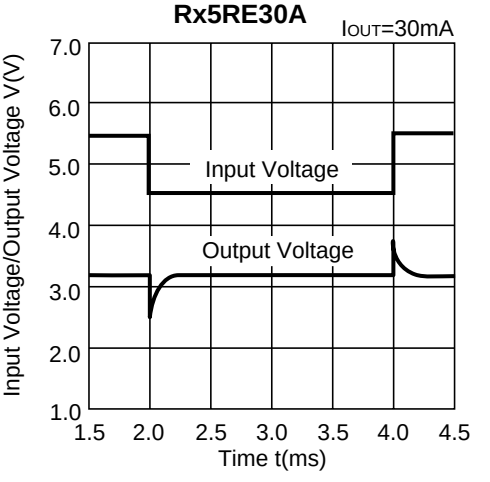

Rx5RE40A I_{OUT}=30mA

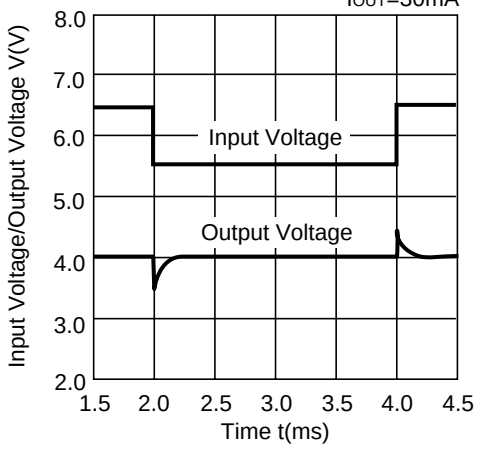

Rx5RE50A I_{OUT}=30mA

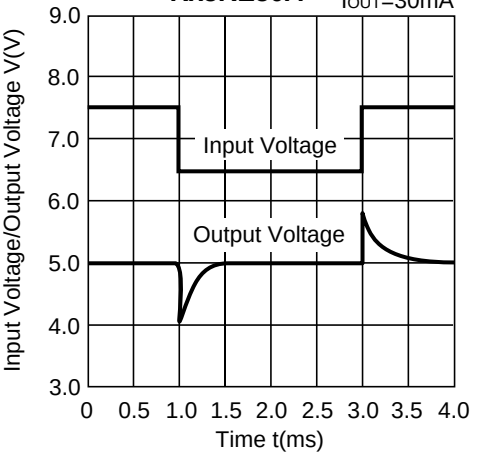

TYPICAL APPLICATION

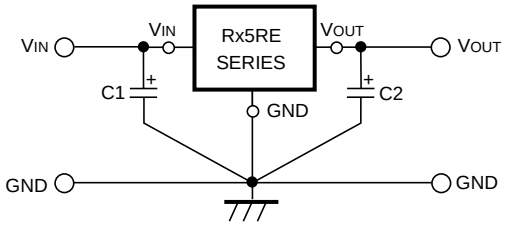

In Rx5RE Series, a constant voltage can be obtained without using capacitors C1 and C2. However, when the wire connected to VIN is long, use capacitor C1. Output noise can be reduced by using capacitor C2.

Insert capacitors C1 and C2 with the capacitance of 0.1µF to 2.0µF between input/output pins and GND pin with minimum wiring.

APPLICATION CIRCUITS

• VOLTAGE BOOST CIRCUIT

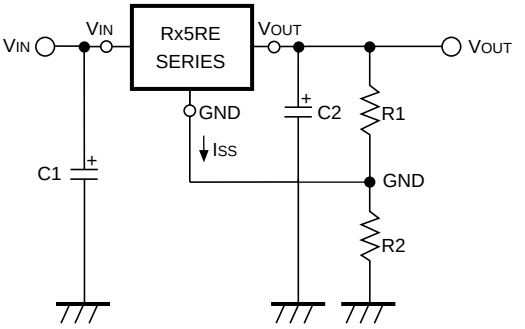

The output voltage can be obtained by the following formula :

$$V_{OUT}=Vreg^{*1} \cdot (1+R2/R1) + I_{SS} \cdot R2$$

Since the quiescent current of Rx5RE Series is so small that the resistances of R1 and R2 can be set as large as several hundreds kΩ and therefore the supply current of "Voltage Boost Circuit" itself can be reduced.

Furthermore, since Rx5RE Series are operated by a constant voltage, the supply current of "Voltage Boost Circuit" is not substantially affected by the input voltage.

∗1) Vreg : Set Output Voltage of Rx5RE Series.

• DUAL POWER SUPPLY CIRCUIT

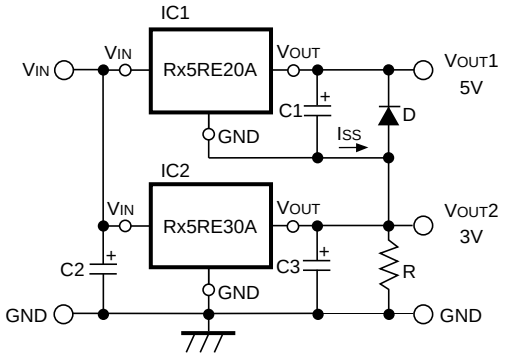

As shown in the circuit diagram, a dual power supply circuit can be constructed by using two Rx5RE Series.

This circuit diagram shows a dual power supply circuit with an output of 3V and an output of 5V. When the minimum output current of IC2 is larger than ISS of IC1, resistor R is unnecessary. Diode D is a protection diode for the case where VOUT2 becomes larger than VOUT1.

• CURRENT BOOST CIRCUIT

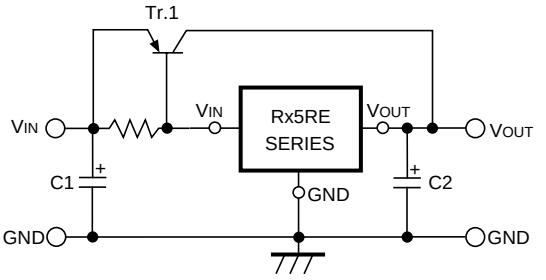

Output current of 120mA or more can be obtained by the current boost circuit constructed as shown in this circuit diagram.

• CURRENT BOOST CIRCUIT WITH OVERCURRENT LIMIT CIRCUIT

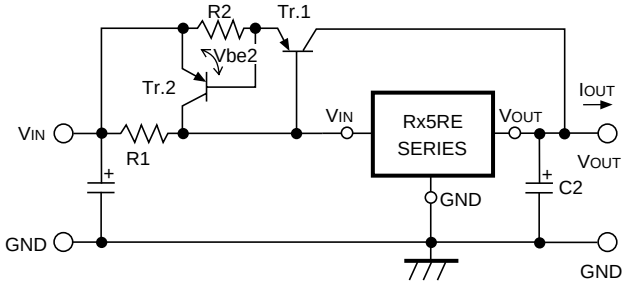

A circuit for protecting Tr.1 from the destruction caused by output short-circuit or overcurrent is shown in this circuit diagram.

When the voltage reduction caused by the current (≒ IOUT) which flows through R2 reaches Vbe2 of Tr.2 by additionally providing the current boost circuit with Tr.2 and R2, Tr.2 is turned ON and the base current of Tr.1 is increased, so that the output current is limited.

Current limit of Overcurrent Limit Circuit is obtained as follows :

$$I_{OUT} \fallingdotseq Vbe2/R2$$

• CURRENT SOURCE

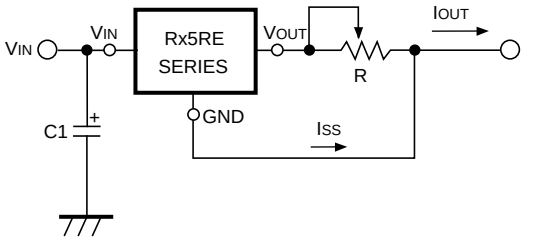

A current source with the structure as shown in this circuit diagram can be used. Output Current IOUT is obtained as follows :

$$I_{OUT}=Vreg^{*1}/R + I_{SS}$$

Take care that Output Current IOUT does not exceed its allowable current.

∗1) Vreg : Set Output Voltage of Rx5RE Series.

1. The products and the product specifications described in this document are subject to change or discontinuation of production without notice for reasons such as improvement. Therefore, before deciding to use the products, please refer to our sales representatives for the latest information thereon.
2. The materials in this document may not be copied or otherwise reproduced in whole or in part without prior written consent of our company.
3. Please be sure to take any necessary formalities under relevant laws or regulations before exporting or otherwise taking out of your country the products or the technical information described herein.
4. The technical information described in this document shows typical characteristics of and example application circuits for the products. The release of such information is not to be construed as a warranty of or a grant of license under our company's or any third party's intellectual property rights or any other rights.
5. The products listed in this document are intended and designed for use as general electronic components in standard applications (office equipment, telecommunication equipment, measuring instruments, consumer electronic products, amusement equipment etc.). Those customers intending to use a product in an application requiring extreme quality and reliability, for example, in a highly specific application where the failure or misoperation of the product could result in human injury or death (aircraft, spacevehicle, nuclear reactor control system, traffic control system, automotive and transportation equipment, combustion equipment, safety devices, life support system etc.) should first contact us.
6. We are making our continuous effort to improve the quality and reliability of our products, but semiconductor products are likely to fail with certain probability. In order to prevent any injury to persons or damages to property resulting from such failure, customers should be careful enough to incorporate safety measures in their design, such as redundancy feature, fire containment feature and fail-safe feature. We do not assume any liability or responsibility for any loss or damage arising from misuse or inappropriate use of the products.
7. Anti-radiation design is not implemented in the products described in this document.
8. The X-ray exposure can influence functions and characteristics of the products. Confirm the product functions and characteristics in the evaluation stage.
9. WLCSP products should be used in light shielded environments. The light exposure can influence functions and characteristics of the products under operation or storage.
10. There can be variation in the marking when different AOI (Automated Optical Inspection) equipment is used. In the case of recognizing the marking characteristic with AOI, please contact our sales or our distributor before attempting to use AOI.
11. Please contact our sales representatives should you have any questions or comments concerning the products or the technical information.

NISSHINBO

Nisshinbo Micro Devices Inc.

Official website
https://www.nisshinbo-microdevices.co.jp/en/
Purchase information
https://www.nisshinbo-microdevices.co.jp/en/buy/

ENTEGRECİ

Bu belge www.entegreci.com üzerinden sunulmaktadır.

Elektronik komponent tedarikinde Entegreci

Entegreci, Eskişehir merkezli, Türkiye geneline satış yapan bir elektronik komponent mağazasıdır. Entegreler (IC), mikrodenetleyiciler, transistörler, diyotlar, pasif elemanlar, konnektörler, modüller ve geliştirme kartları tek adetten seri üretim adetlerine kadar satılır. Ürün sayfalarında güncel stok durumunu, fiyatı ve datasheet bağlantısını bulabilirsiniz.

Parça koduyla arama

Üretici parça numarasını yazın; stok ve fiyatı hemen görün.

www.entegreci.com

Ürün kategorileri

Entegreden kapasitöre tüm elektronik komponent kategorileri.

Kategorilere göz atın

Üreticiler

Aradığınız üreticinin ürünlerini tek sayfada inceleyin.

Üreticileri görün

Toplu alım ve teklif

Listede olmayan ya da yüksek adetli parçalar için teklif isteyin.

Teklif isteyin

www.entegreci.com | **destek@entegreci.com** | **0850 305 90 34**

Entegreci is an online electronic components store based in Türkiye. Search by manufacturer part number to see stock, prices and datasheets for integrated circuits, microcontrollers, transistors, passive components and connectors, or request a quote for parts that are not listed.

Bu sayfa Entegreci tarafından eklenmiştir. Belgenin önceki sayfaları asıl yayıncısına aittir ve içeriği değiştirilmemiştir; en güncel sürüm için belgenin yayıncısına başvurun.