0.6% ACCURACY LOW NOISE 200mA LDO REGULATOR

NO.EA-140-160425

OUTLINE

The RP100x Series are CMOS-based voltage regulator ICs with high output voltage accuracy, extremely low supply current, low ON-resistance, and high ripple rejection. Each of these ICs consists of a voltage reference unit, an error amplifier, resistor-net for voltage setting, a current limit circuit and a chip enable circuit.

These ICs perform with low dropout voltage and a chip enable function. The line transient response and load transient response of the RP100x Series are excellent, thus these ICs are very suitable for the power supply for hand-held communication equipment.

The output voltage of these ICs is fixed with high accuracy. Since the packages for these ICs are SOT-23-5 and DFN(PL)1612-4, therefore high density mounting of the ICs on boards is possible.

FEATURES

- Supply Current ..... Typ. 18μA
- Standby Current ..... Typ. 0.1μA
- Dropout Voltage ..... Typ. 0.13V (I_{OUT}=150mA, V_{OUT}=2.8V)
- Ripple Rejection ..... Typ. 75dB (f=1kHz)
- Temperature-Drift Coefficient of Output Voltage ... Typ. ±30ppm/°C
- Line Regulation ..... Typ. 0.02%/V
- Output Voltage Accuracy ..... ±0.6%
- Packages ..... DFN(PL)1612-4, SOT-23-5
- Input Voltage Range ..... 1.7V to 5.25V
- Output Voltage Range ..... 1.2V to 3.3V (0.1V steps)
  (For other voltages, please refer to MARK INFORMATIONS.)
- Built-in Fold Back Protection Circuit ..... Typ. 40mA (Current at short mode)
- Ceramic capacitors are recommended to be used with this IC .....1.0μF or more

APPLICATIONS

- Power source for portable communication equipment.
- Power source for electrical appliances such as cameras, VCRs and camcorders.
- Power source for battery-powered equipment.

BLOCK DIAGRAMS

RP100xxx1B

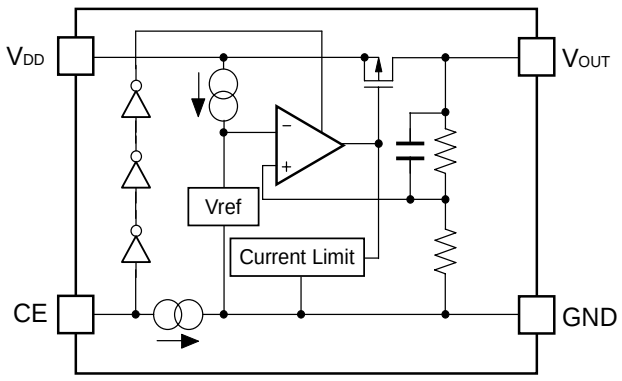

RP100xxx1D

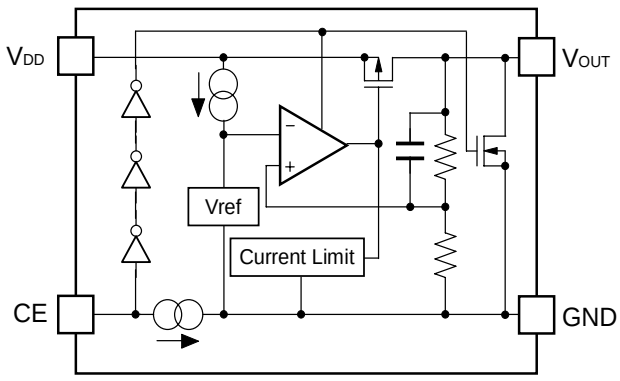

SELECTION GUIDE

The output voltage, auto discharge function, package, and the taping type, etc. for the ICs can be selected at the user's request.

Product Name	Package	Quantity per Reel	Pb Free	Halogen Free
RP100Kxx1∗-TR	DFN(PL)1612-4	5,000 pcs	Yes	Yes
RP100Nxx1∗-TR-FE	SOT-23-5	3,000 pcs	Yes	Yes

xx: The output voltage can be designated in the range from 1.2V(12) to 3.3V(33) in 0.1V steps.
(For other voltages, please refer to MARK INFORMATIONS.)

∗ : CE pin polarity and auto discharge function at off state are options as follows.
(B) "H" active, without auto discharge function at off state
(D) "H" active, with auto discharge function at off state

PIN CONFIGURATIONS

● **DFN(PL)1612-4**

Top View

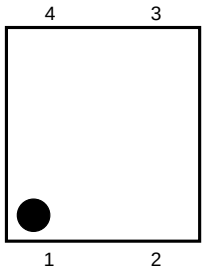

Bottom View

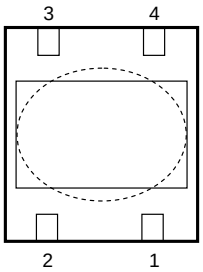

● **SOT-23-5**

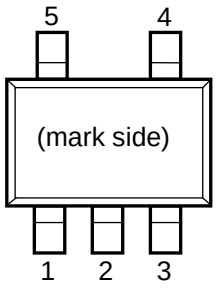

PIN DESCRIPTIONS

● **DFN(PL)1612-4**

Pin No	Symbol	Pin Description
1	V_{OUT}	Output Pin
2	GND	Ground Pin
3	CE	Chip Enable Pin ("H" Active)
4	V_{DD}	Input Pin

∗) Tab is GND level. (They are connected to the reverse side of this IC.)
The tab is better to be connected to the GND, but leaving it open is also acceptable.

● **SOT-23-5**

Pin No	Symbol	Pin Description
1	V_{DD}	Input Pin
2	GND	Ground Pin
3	CE	Chip Enable Pin ("H" Active)
4	NC	No Connection
5	V_{OUT}	Output Pin

ABSOLUTE MAXIMUM RATINGS

Symbol	Item	Rating	Unit
V_{IN}	Input Voltage	6.0	V
V_{CE}	Input Voltage (CE Pin)	6.0	V
V_{OUT}	Output Voltage	−0.3 to V_{IN}+0.3	V
I_{OUT}	Output Current	300	mA
P_D	Power Dissipation (SOT-23-5)*	420	mW
	Power Dissipation (DFN(PL)1612-4)*	610	
Topt	Operating Temperature Range	−40 to 85	°C
Tstg	Storage Temperature Range	−55 to 125	°C

∗) For Power Dissipation, please refer to PACKAGE INFORMATION.

ABSOLUTE MAXIMUM RATINGS

Electronic and mechanical stress momentarily exceeded absolute maximum ratings may cause the permanent damages and may degrade the life time and safety for both device and system using the device in the field. The functional operation at or over these absolute maximum ratings is not assured.

ELECTRICAL CHARACTERISTICS

- **RP100xxx1B/D**

V_{IN}=Set V_{OUT}+1V, I_{OUT}=1mA, C_{IN}=C_{OUT}=1μF, unless otherwise noted. Topt=25°C

Symbol	Item	Conditions		Min.	Typ.	Max.	Unit
V_{OUT}	Output Voltage		V_{OUT} > 2.0V	×0.994		×1.006	V
			V_{OUT} ≤ 2.0V	−12		+12	mV
I_{OUT}	Output Current			200			mA
$\Delta V_{OUT}/\Delta I_{OUT}$	Load Regulation	1mA ≤ I_{OUT} ≤ 150mA			20	40	mV
V_{DIF}	Dropout Voltage	I_{OUT}=150mA	1.2V ≤ V_{OUT} < 1.5V		0.40	0.50	V
			1.5V ≤ V_{OUT} < 1.7V		0.24	0.38	
			1.7V ≤ V_{OUT} < 2.0V		0.21	0.34	
			2.0V ≤ V_{OUT} < 2.5V		0.17	0.30	
			2.5V ≤ V_{OUT} < 2.8V		0.14	0.25	
			2.8V ≤ V_{OUT} ≤ 3.3V		0.13	0.23	
I_{SS}	Supply Current	I_{OUT}=0mA			18	25	μA
Istandby	Standby Current	V_{CE}=0V			0.1	2.0	μA
$\Delta V_{OUT}/\Delta V_{IN}$	Line Regulation	Set V_{OUT}+0.5V ≤ V_{IN} ≤ 5.0V			0.02	0.10	%/V
RR	Ripple Rejection	f=1kHz, Ripple 0.2Vp-p V_{IN}=Set V_{OUT}+1V, I_{OUT}=30mA (In case that V_{OUT} ≤ 2.0V, V_{IN}=3V)			75		dB
V_{IN}	Input Voltage*			1.7		5.25	V
$\Delta V_{OUT}/\Delta Topt$	Output Voltage Temperature Coefficient	−40°C ≤ Topt ≤ 85°C			±30		ppm /°C
I_{SC}	Short Current Limit	V_{OUT}=0V			40		mA
I_{PD}	CE Pull-down Current				0.3		μA
V_{CEH}	CE Input Voltage "H"			1.1			V
V_{CEL}	CE Input Voltage "L"					0.3	V
en	Output Noise	BW=10Hz to 100kHz I_{OUT}=30mA			30		μVrms
R_{LOW}	Low Output Nch Tr. ON Resistance (of D version)	V_{IN}=4.0V, V_{CE}=0V			30		Ω

*) The maximum Input Voltage of the ELECTRICAL CHARACTERISTICS is 5.25V. In case of exceeding this specification, the IC must be operated on condition that the Input Voltage is up to 5.5V and the total operating time is within 500hrs.

RECOMMENDED OPERATING CONDITIONS (ELECTRICAL CHARACTERISTICS)

All of electronic equipment should be designed that the mounted semiconductor devices operate within the recommended operating conditions. The semiconductor devices cannot operate normally over the recommended operating conditions, even if when they are used over such conditions by momentary electronic noise or surge. And the semiconductor devices may receive serious damage when they continue to operate over the recommended operating conditions.

TYPICAL APPLICATION

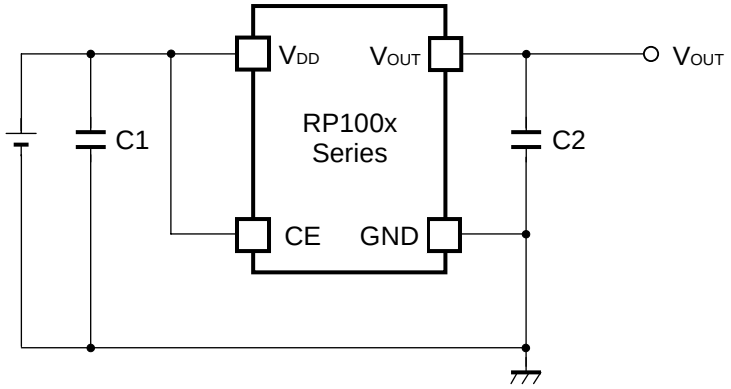

(External Components)
C2 1.0μF MURATA: GRM155B31A105KE15

TECHNICAL NOTES

When using these ICs, consider the following points:

Phase Compensation

In these ICs, phase compensation is made for securing stable operation even if the load current is varied. For this purpose, use a capacitor C2 with good frequency characteristics and ESR (Equivalent Series Resistance).

Ceramic capacitors have different temperature characteristics and bias characteristics depending on their dimensions and manufacturers. If the setting voltage is 2.5V or more and the capacitor's dimensions for V_{OUT} equal to 1.0mm by 0.5mm or smaller than that, the capacitance value might be extremely low. As a result, the capacitance might be much less than expected value. In such cases, the operation might be unstable at low temperature. (–20°C or less) In that case, use a larger capacity, or a large dimensions' capacitor. (For example 1.6mm by 0.8mm)

If a tantalum capacitor is selected as an output capacitor, large ESR may be a cause of unstable operation. Evaluate the operation of PCB with considerable frequency characteristics.

PCB Layout

Make V_{DD} and GND lines sufficient. If their impedance is high, noise pickup or unstable operation may result. Connect a capacitor C1 with a capacitance value as much as 1.0μF or more between V_{DD} and GND pin, and as close as possible to the pins.

Set external components, especially the output capacitor C2, as close as possible to the ICs, and make wiring as short as possible.

TEST CIRCUITS

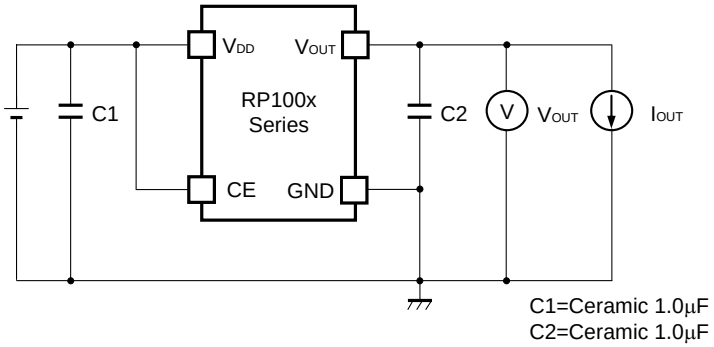

Basic Test Circuit

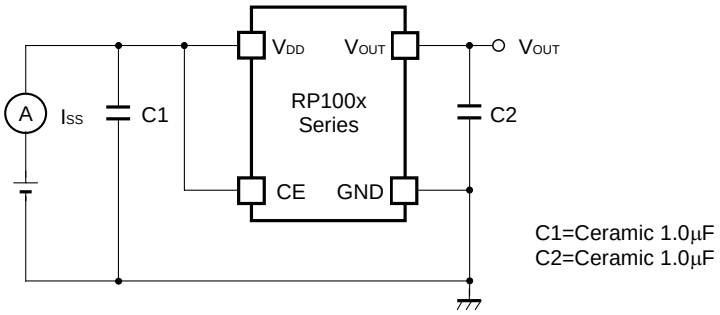

Test Circuit for Supply Current

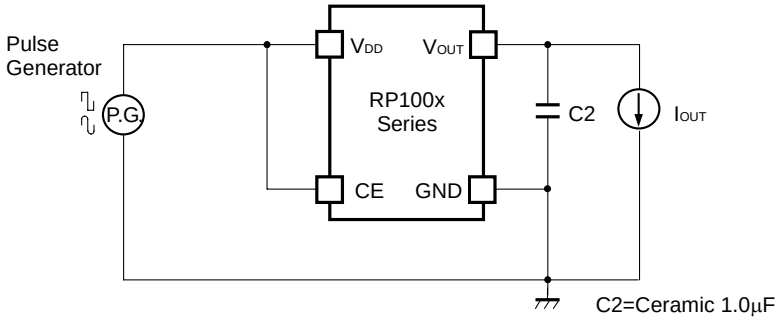

Test Circuit for Ripple Rejection

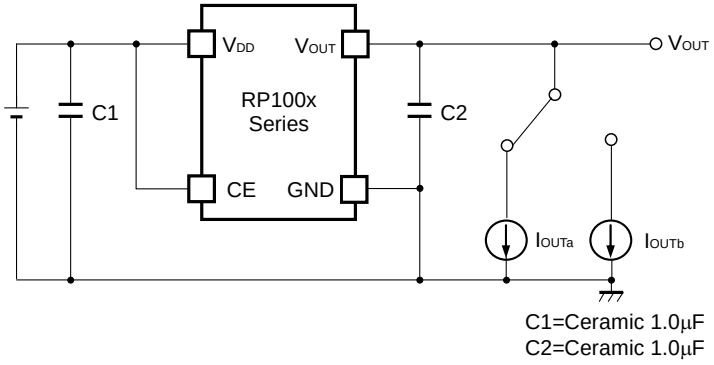

Test Circuit for Load Transient Response

TYPICAL CHARACTERISTICS

1) Output Voltage vs. Output Current (C1=1.0µF, C2=1.0µF, Topt=25°C)

RP100x121x

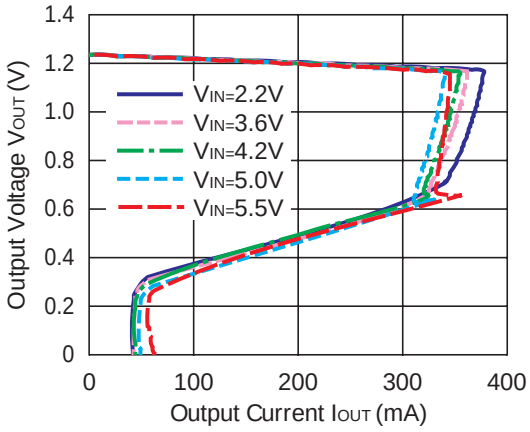

RP100x251x

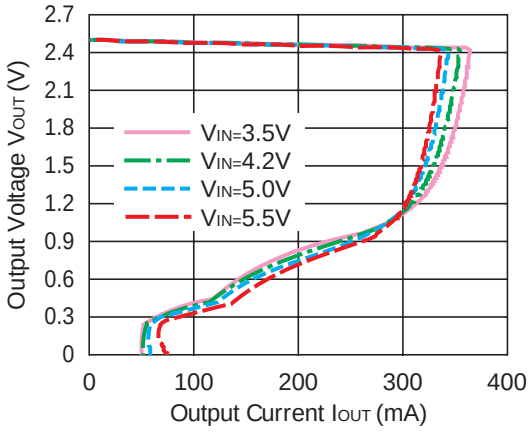

RP100x331x

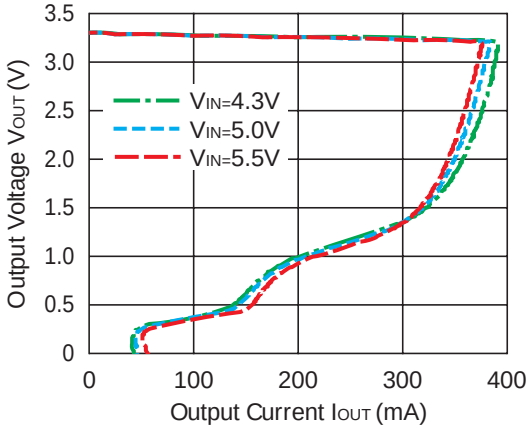

2) Output Voltage vs. Input Voltage (C1=1.0µF, C2=1.0µF, Topt=25°C)

RP100x121x

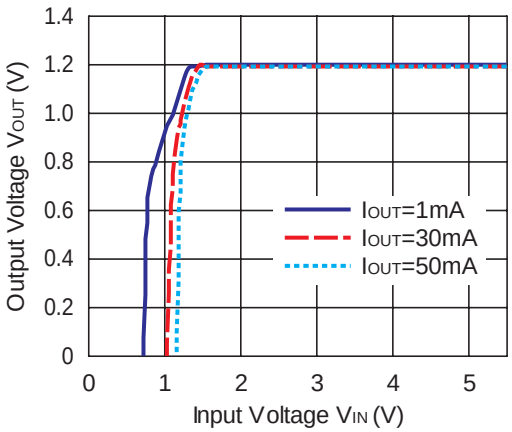

RP100x121x

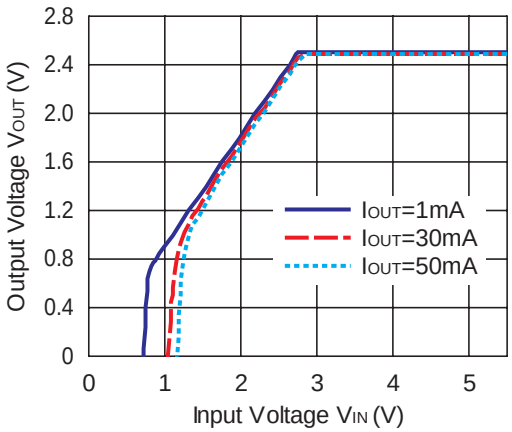

RP100x121x

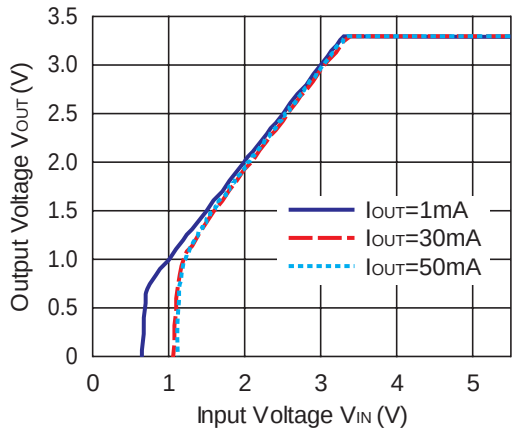

3) Supply Current vs. Input Voltage (C1=1.0µF, C2=1.0µF, Topt=25°C)

RP100x121x

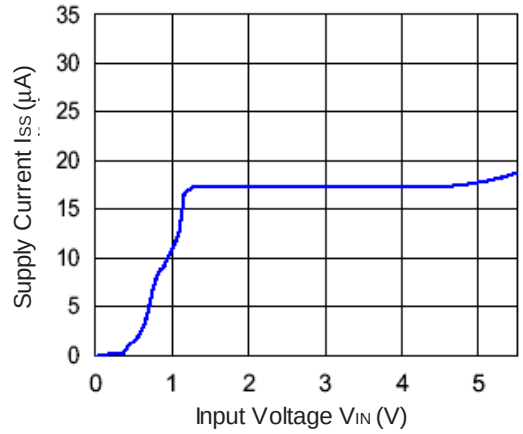

RP100x251x

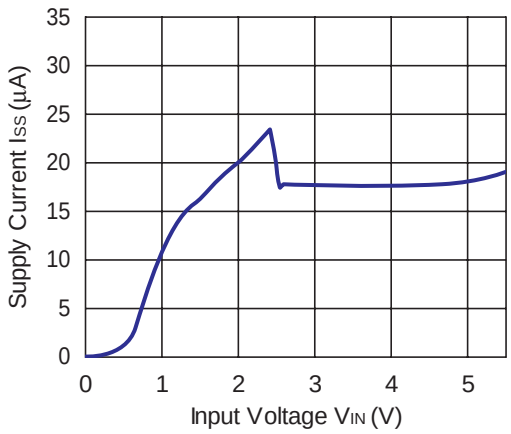

RP100x331x

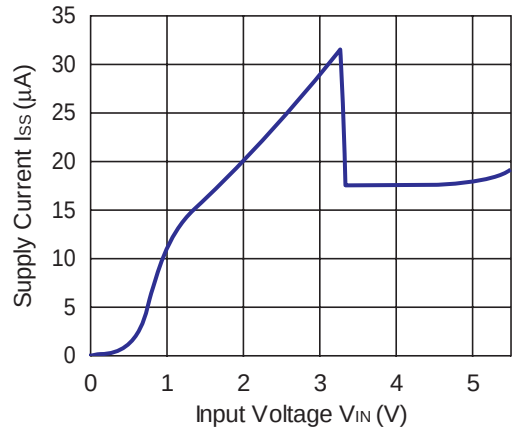

4) Output Voltage vs. Temperature (C1=1.0µF, C2=1.0µF, I_{OUT}=1mA)

RP100x121x

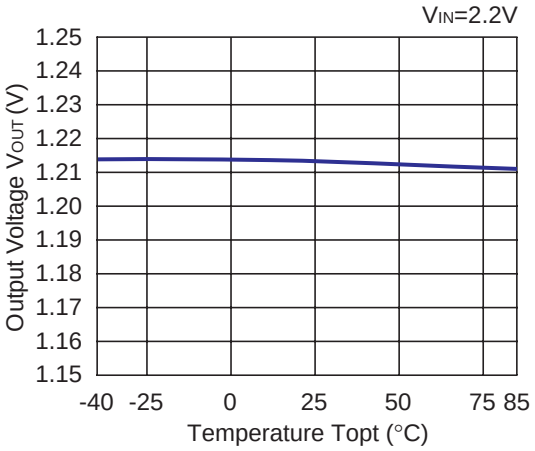

RP100x251x

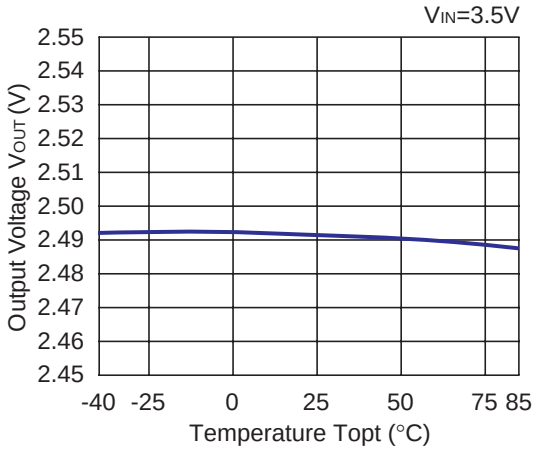

RP100x331x

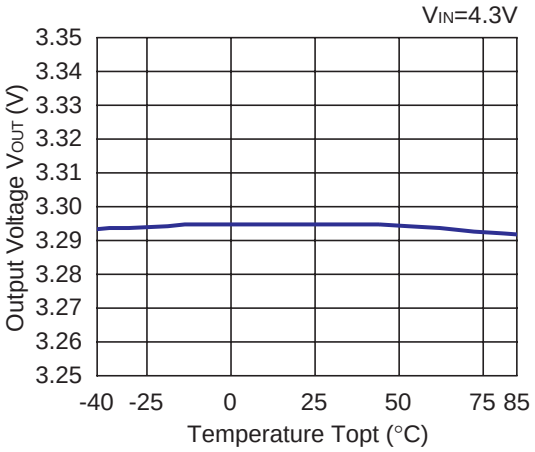

5) Supply Current vs. Temperature (C1=1.0µF, C2=1.0µF, I_{OUT}=0mA)

RP100x121x

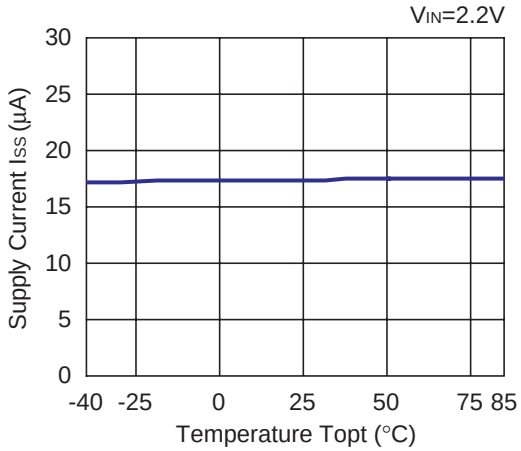

RP100x251x

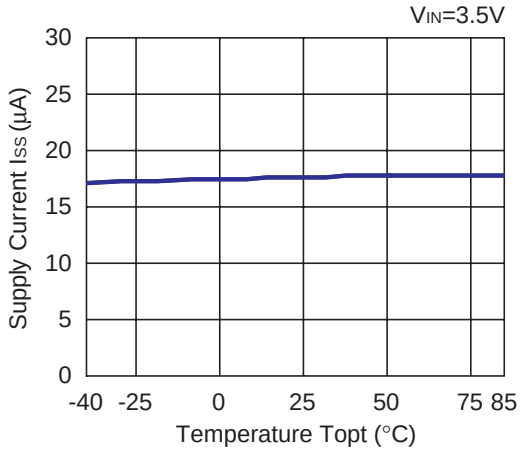

RP100x331x

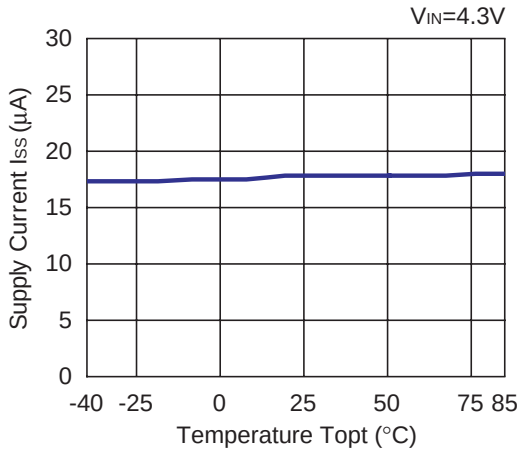

6) Dropout Voltage vs. Output Current (C1=1.0µF,C2=1.0µF)

RP100x121x

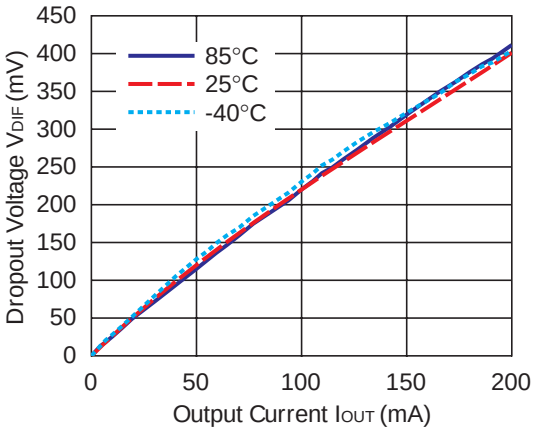

RP100x151x

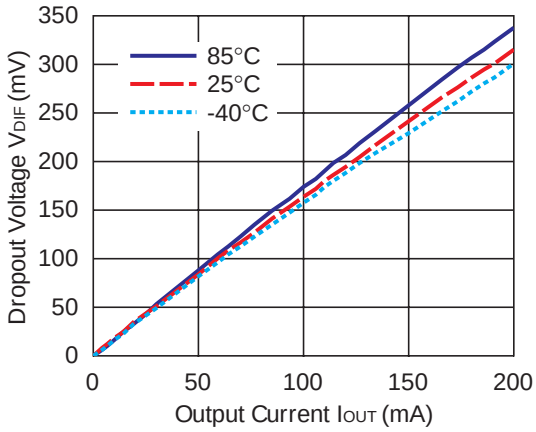

RP100x171x

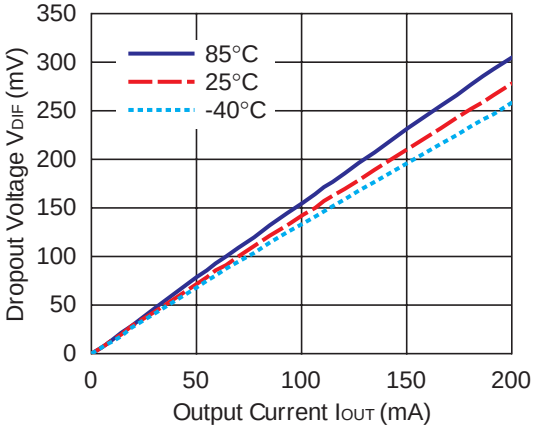

RP100x201x

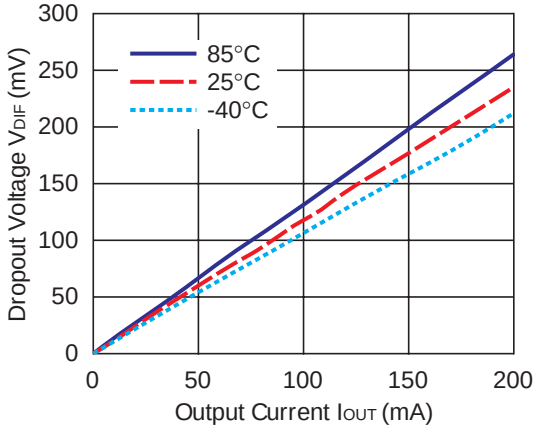

RP100x251x

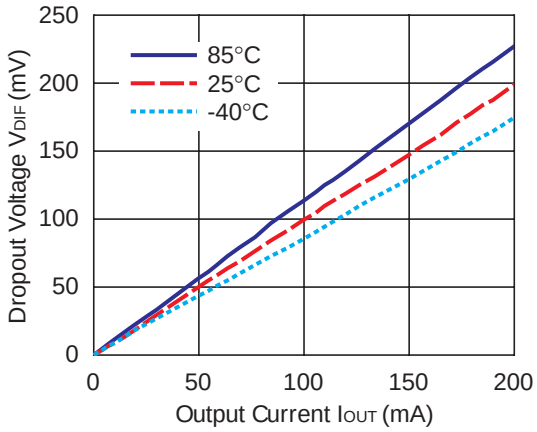

RP100x281x

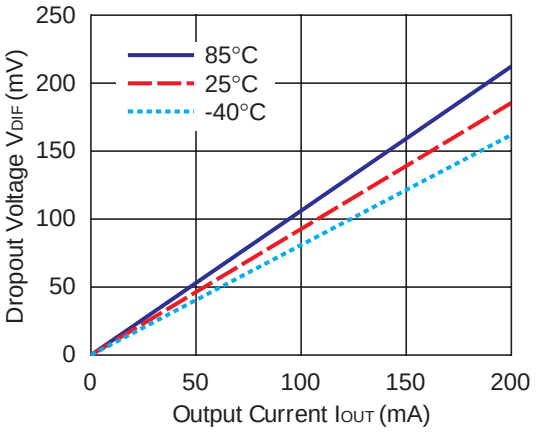

RP100x331x

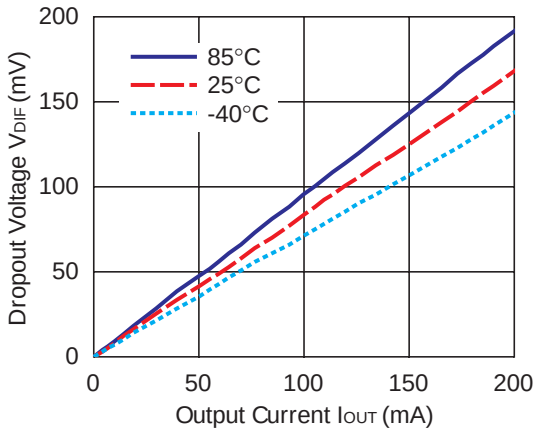

7) Dropout Voltage vs Set Output Voltage (C1=1.0µF, C2=1.0µF, Topt=25°C)

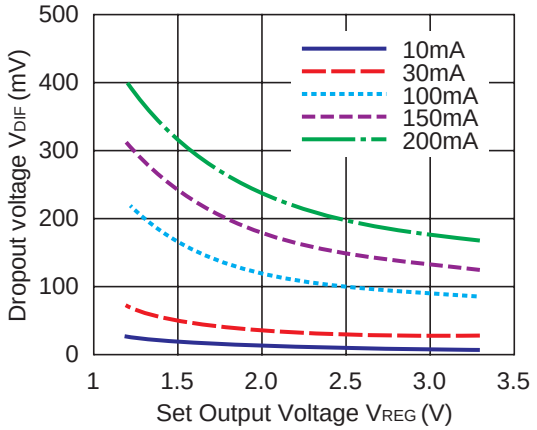

8) Ripple Rejection vs. Input Bias Voltage (C1=none, C2=1.0µF, Ripple=0.2Vp-p, Topt=25°C)

RP100x121x

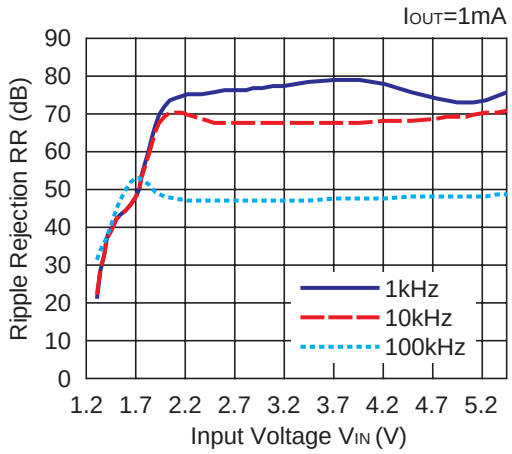

RP100x121x

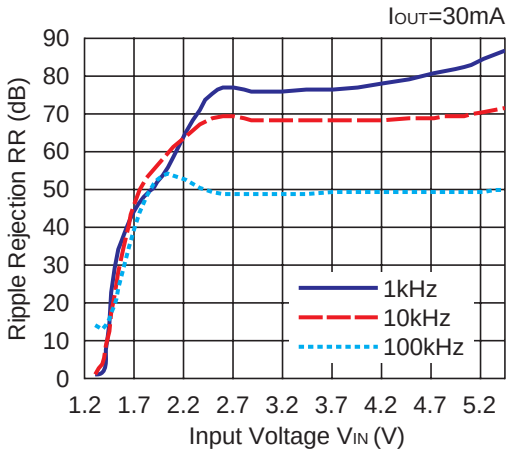

RP100x281x

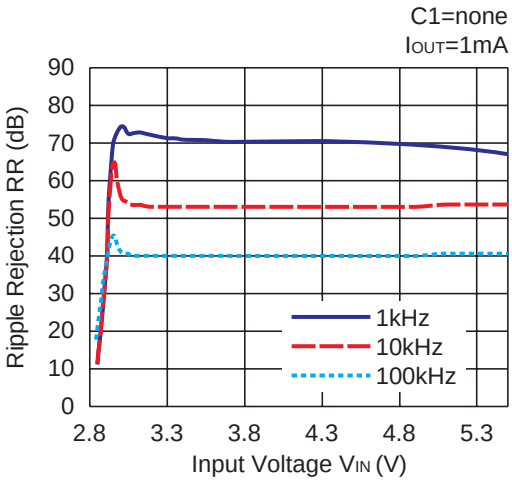

RP100x281x

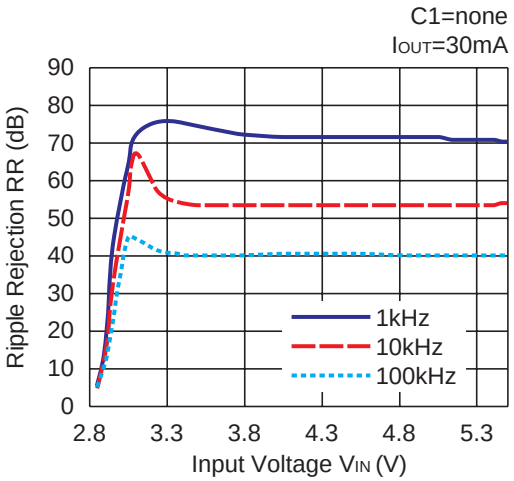

9) Ripple Rejection vs. Frequency (C1=none, C2=1.0µF, Ripple=0.2Vp-p)

RP100x121x

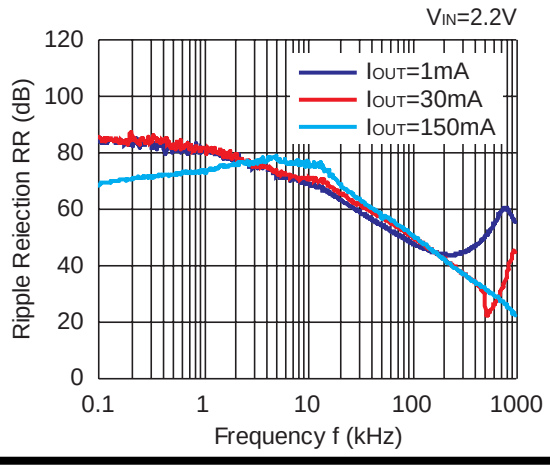

RP100x121x

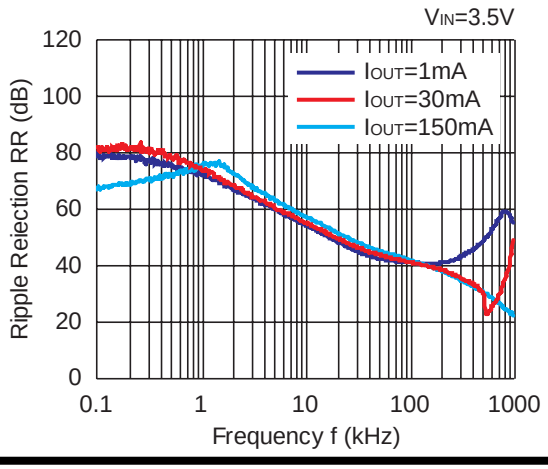

RP100x331x

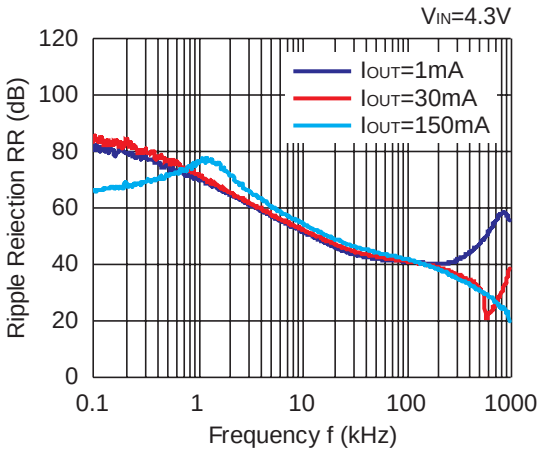

RP100x121x

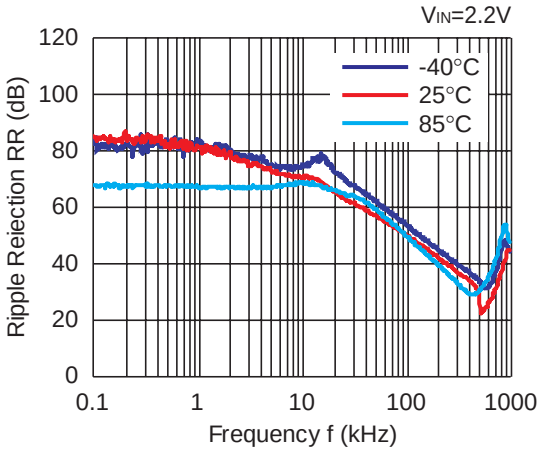

RP100x251x

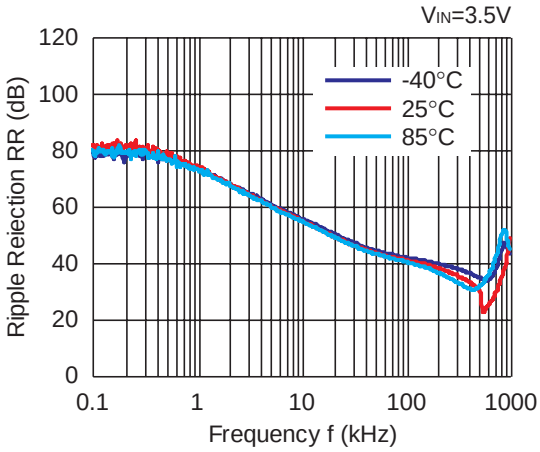

RP100x331x

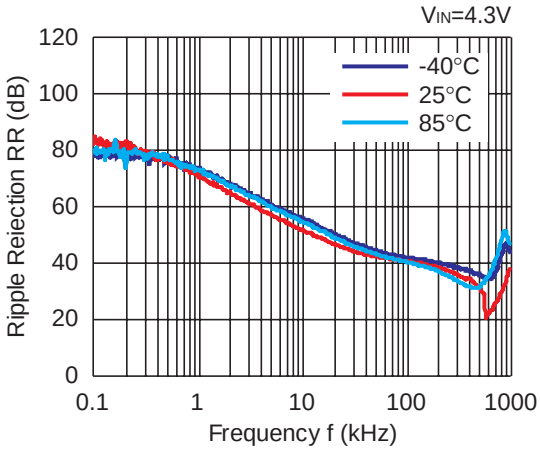

10) Input Transient Response (I_{OUT}=30mA, tr=tf=5µs, Topt=25°C)

RP100x121x

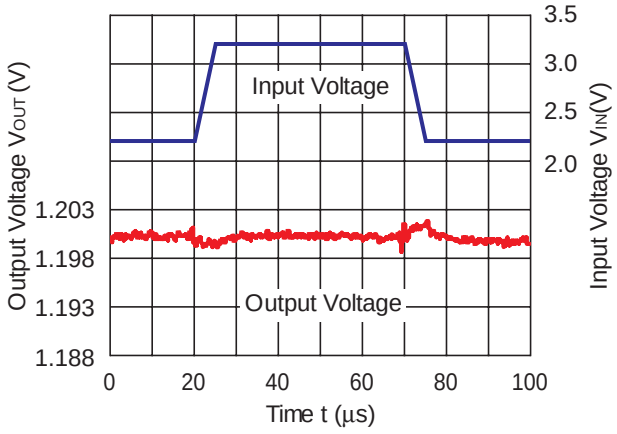

RP100x251x

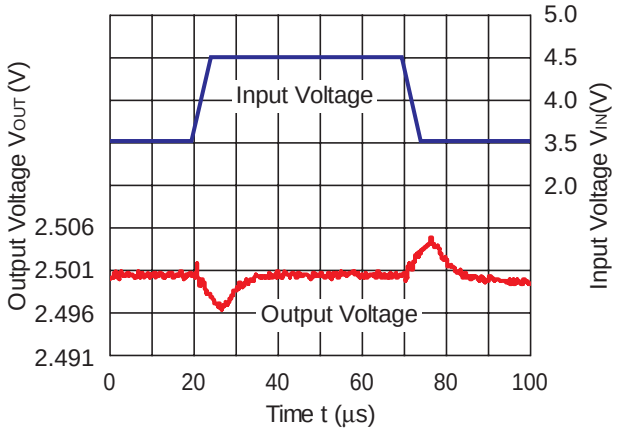

RP100x331x

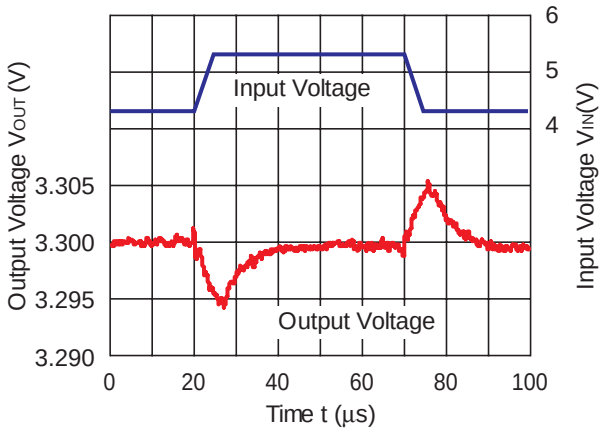

11) Load Transient Response (C2=1.0µF, Topt=25°C)

RP100x121x

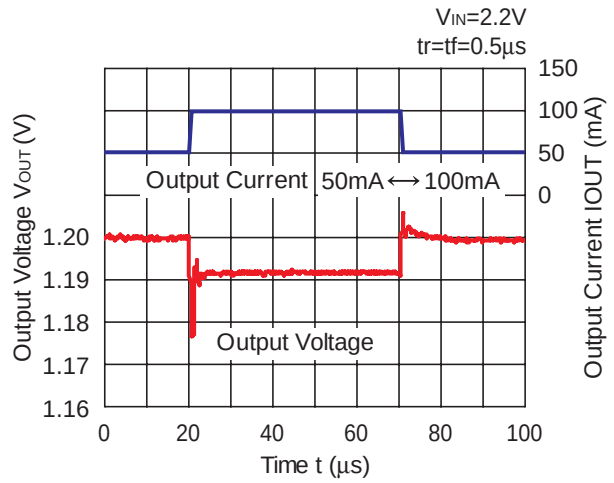

RP100x251x

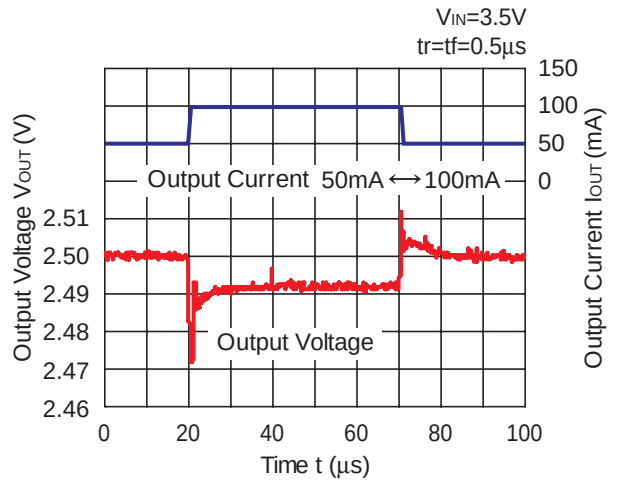

RP100x331x

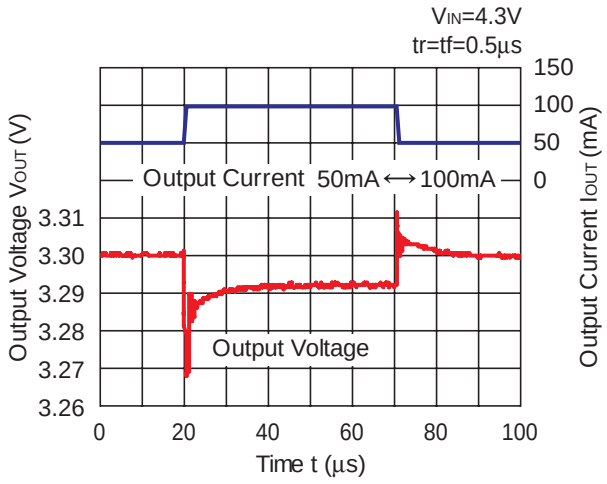

RP100x121x

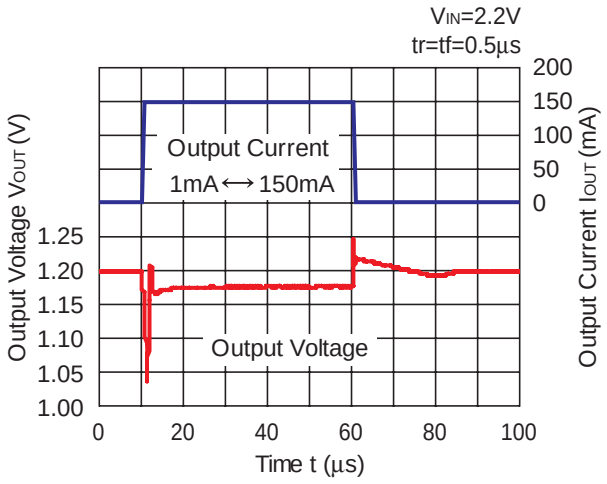

RP100x251x

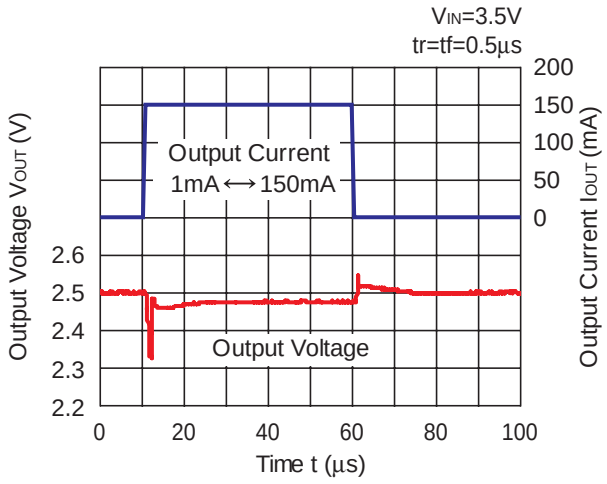

RP100x331x

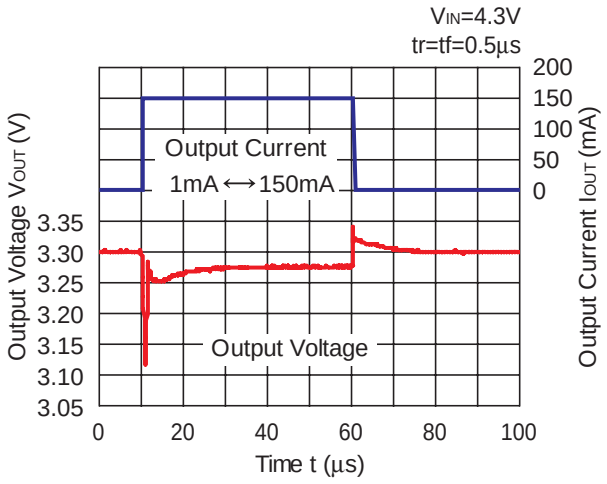

RP100x121x

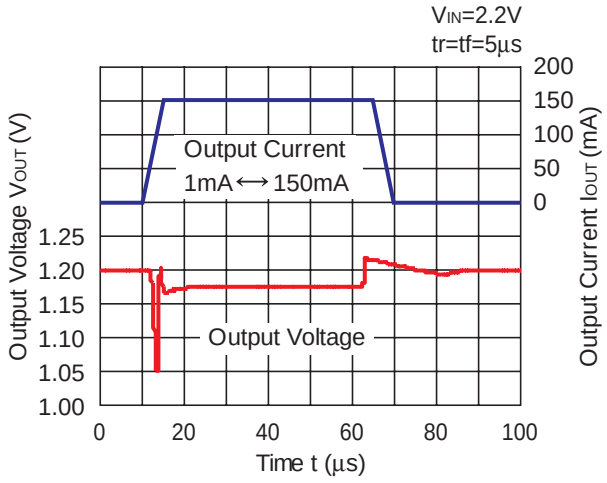

RP100x251x

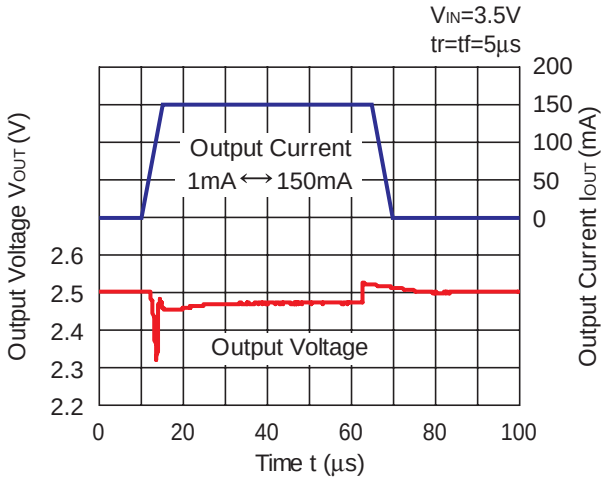

RP100x331x

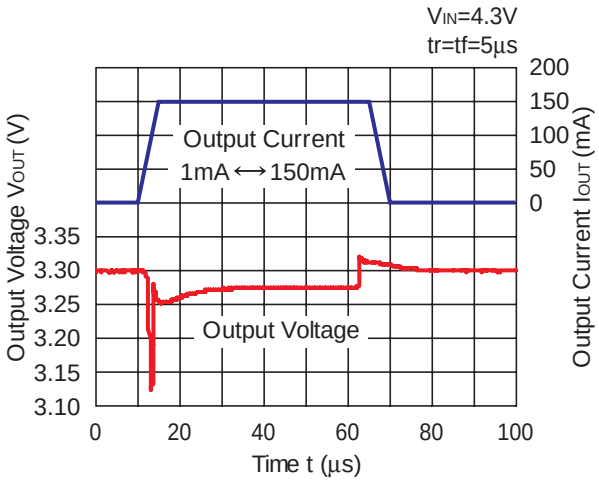

12) Turn On Speed with CE pin (C1=1.0µF, C2=1.0µF, Topt=25°C)

RP100x121x

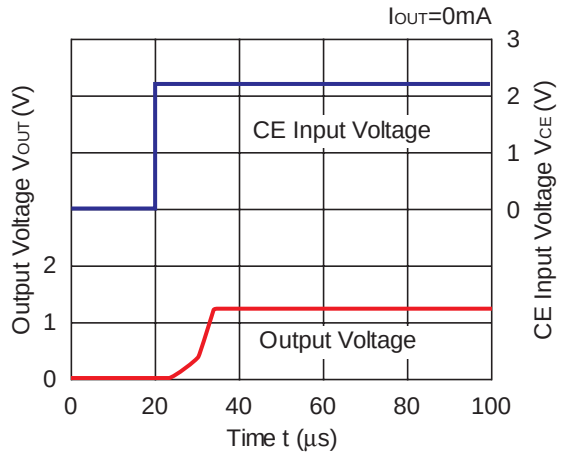

RP100x121x

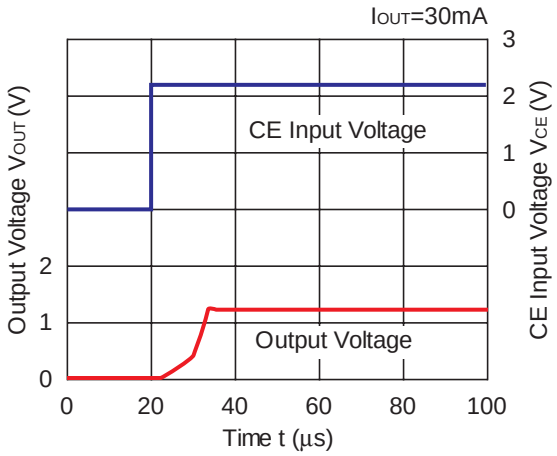

RP100x121x

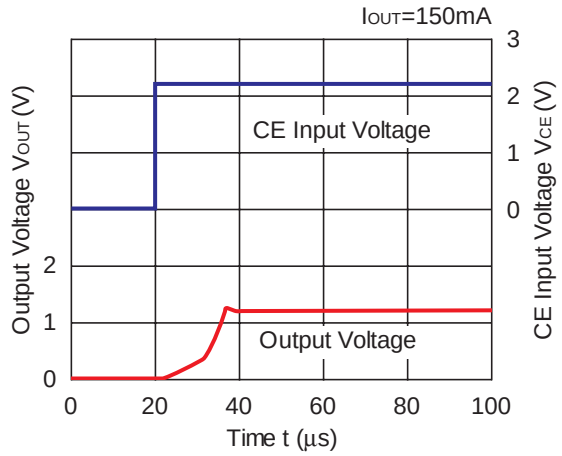

RP100x251x

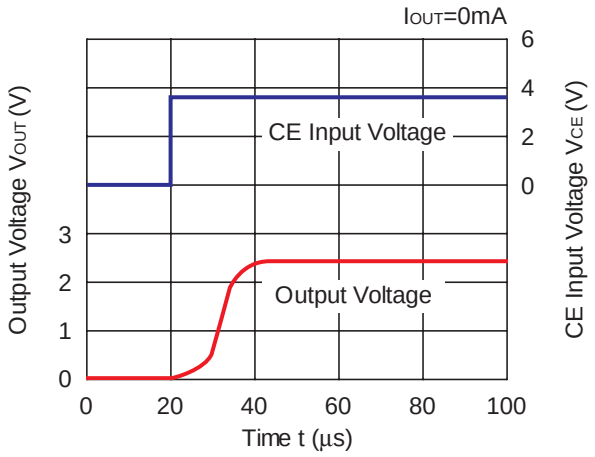

RP100x251x

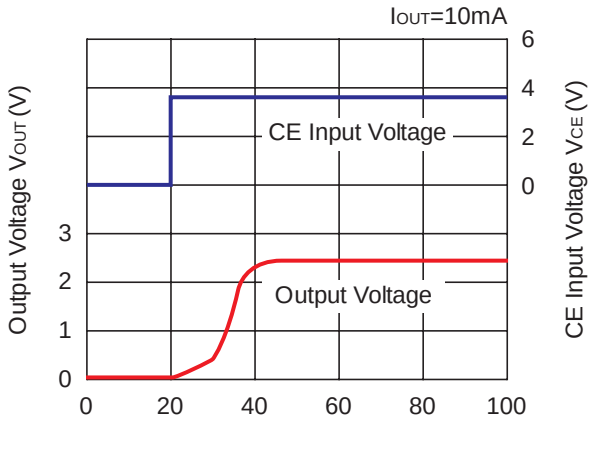

RP100x251x

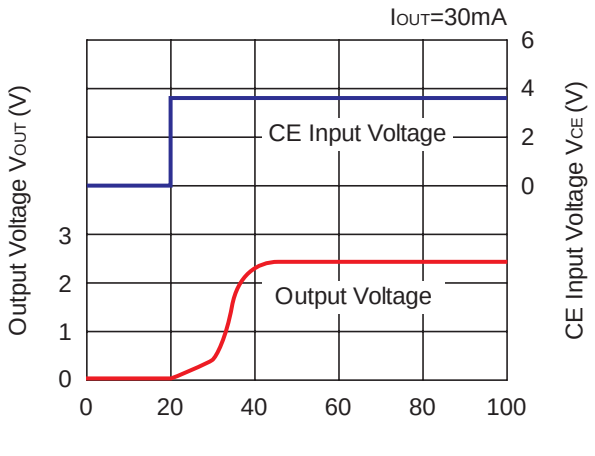

RP100x251x

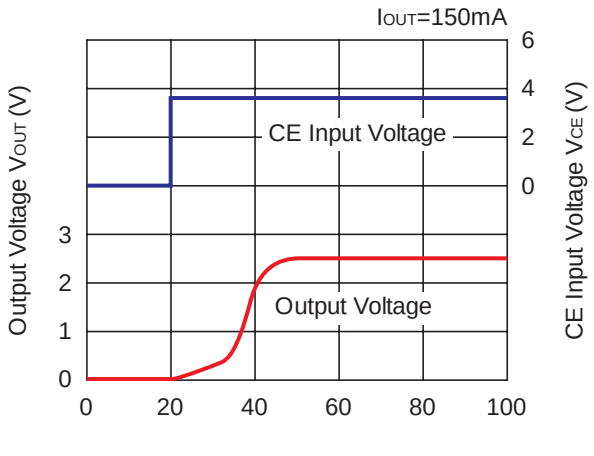

RP100x331x

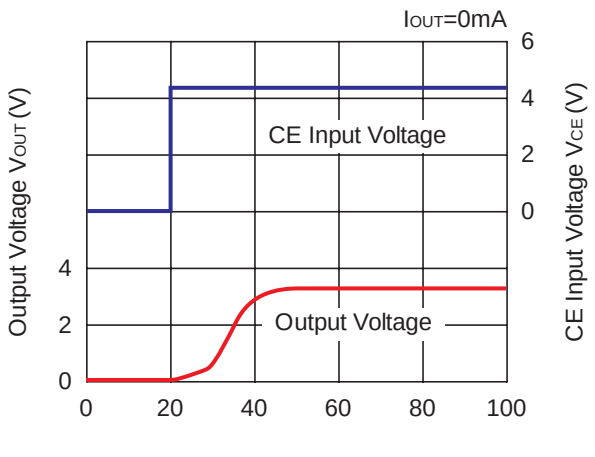

RP100x331x

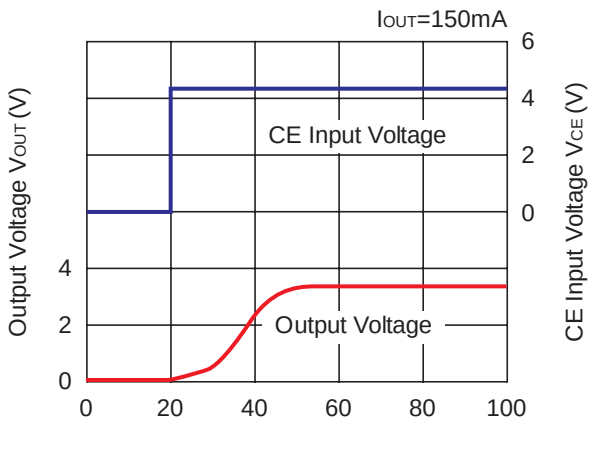

13) Turn Off Speed with CE pin (D Version) (C1=1.0µF, C2=1.0µF, Topt=25°C)

RP100x121D

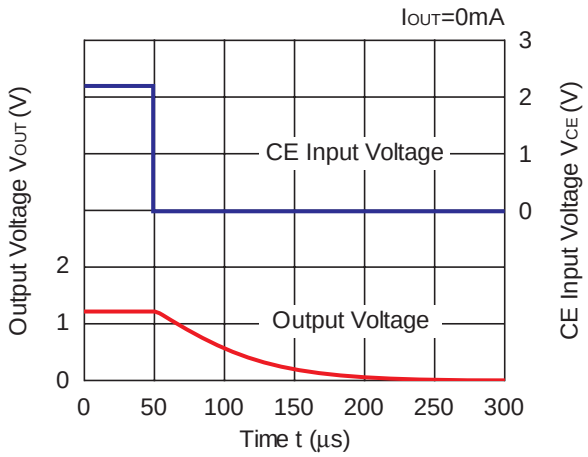

RP100x121D

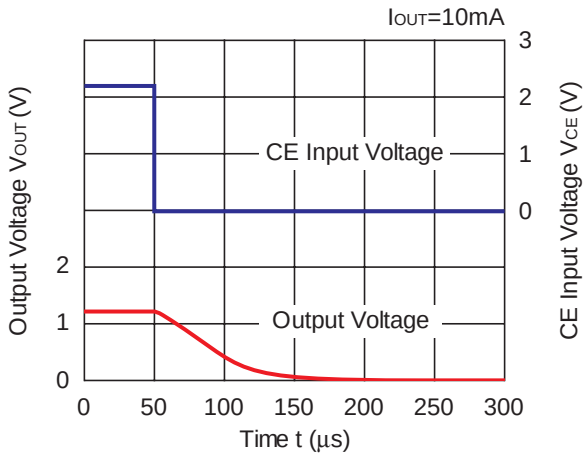

RP100x121D

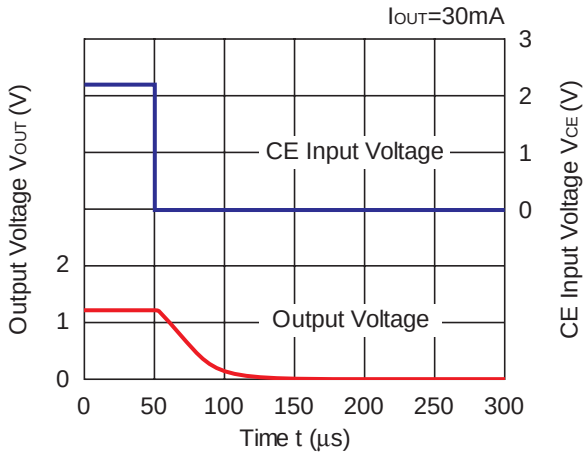

RP100x121D

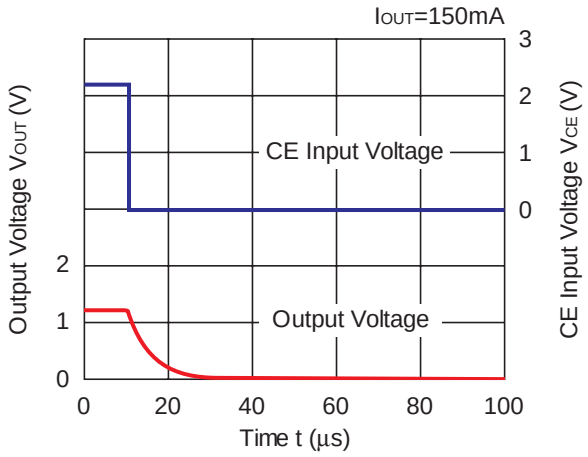

RP100x251D

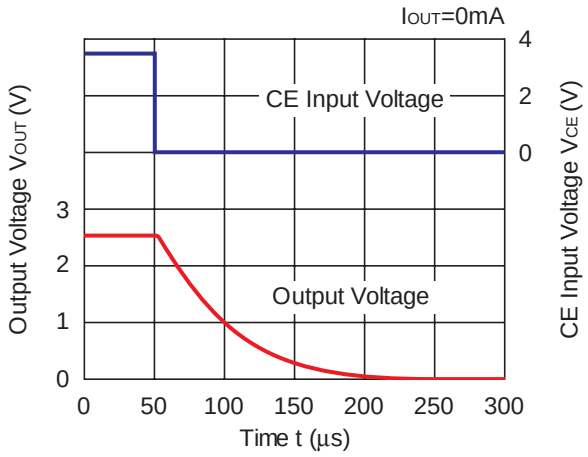

RP100x251D

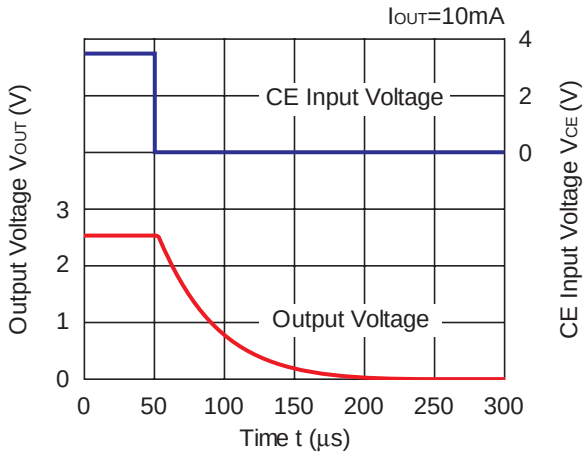

RP100x251D

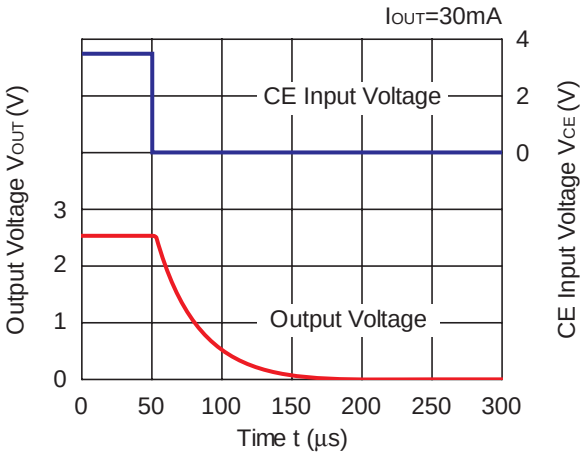

RP100x251D

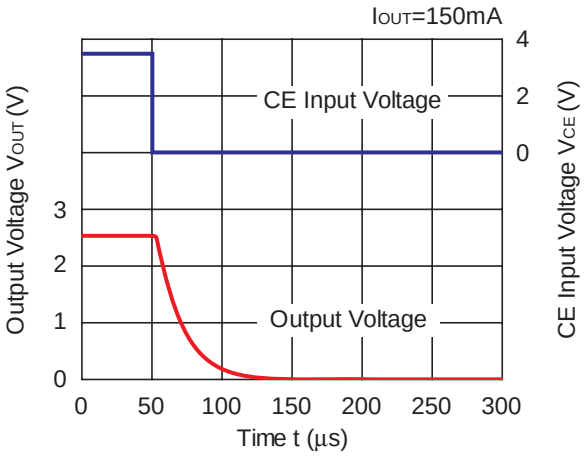

RP100x331D

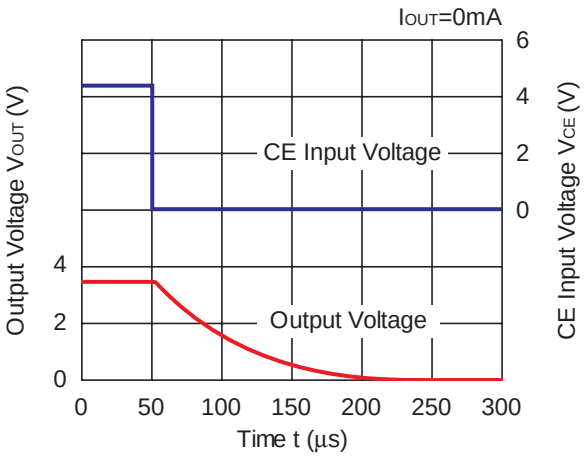

RP100x331D

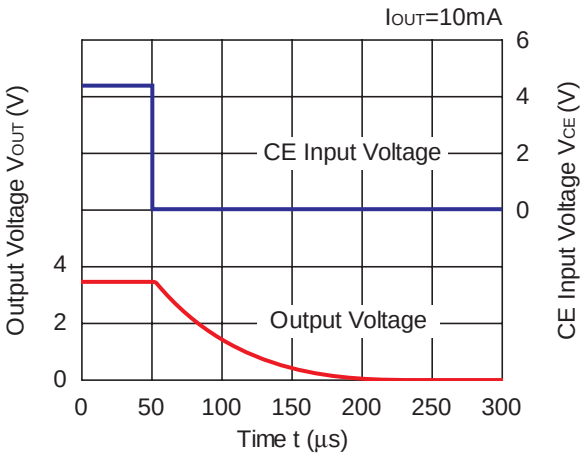

RP100x331D

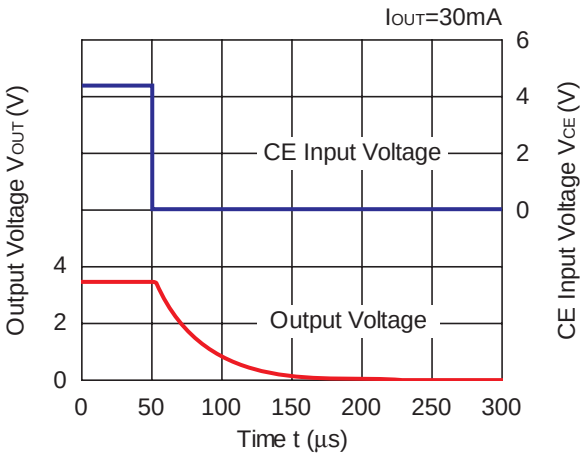

RP100x331Dx

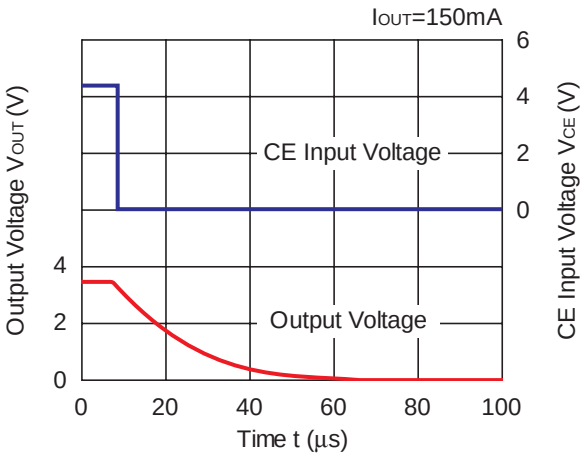

14) Dropout Voltage vs Temperature (C1=1.0μF, C2=1.0μF)

RP100x121x

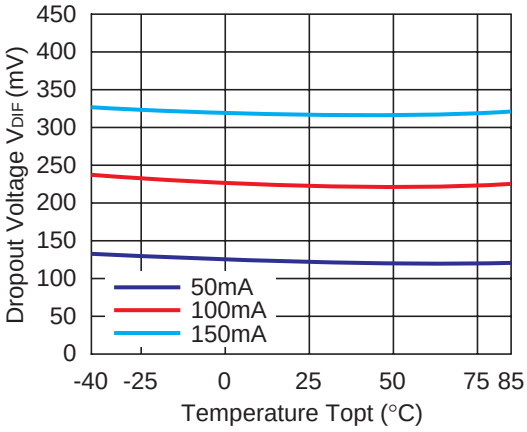

RP100x251x

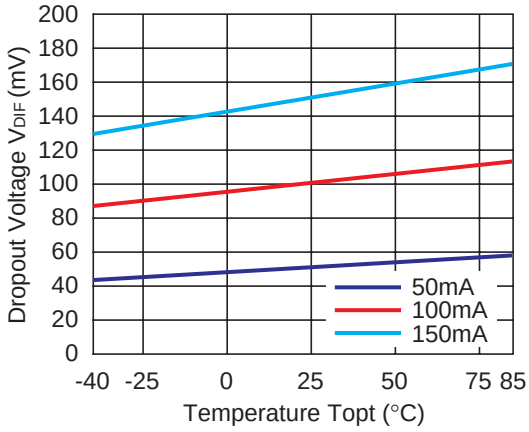

RP100x301x

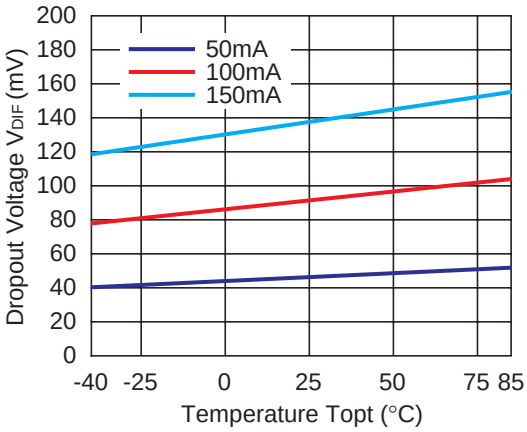

RP100x331x

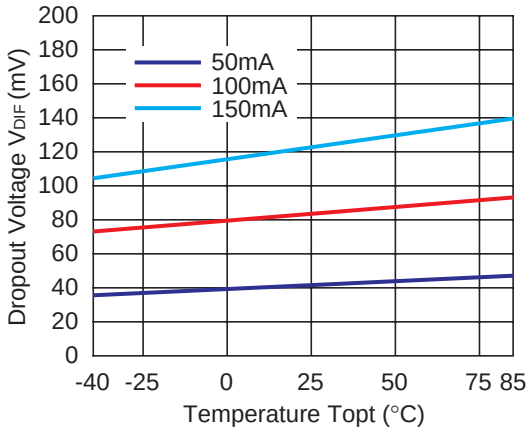

15) Output Voltage vs. Input Voltage (C1=1.0μF, C2=1.0μF)

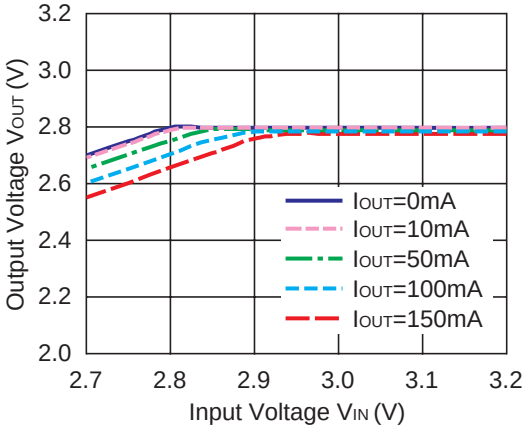

ESR vs. Output Current

When using these ICs, consider the following points:

The relations between I_{OUT} (Output Current) and ESR of an output capacitor are shown below.
The conditions when the white noise level is under 40μV (Avg.) are marked as the hatched area in the graph.

Measurement conditions

Frequency Band: 10Hz to 2MHz
Temperature: −40°C to 85°C

RP100x121x

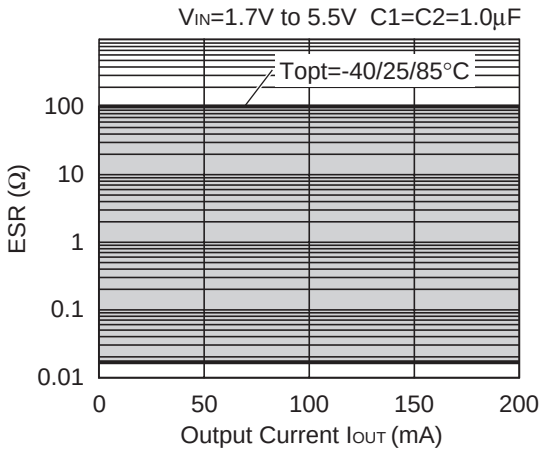

RP100x251x

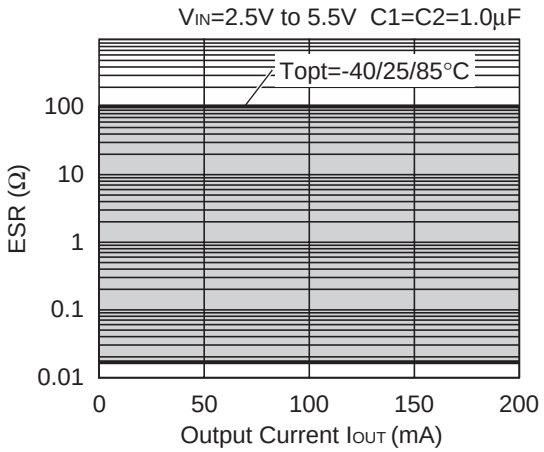

RP100x331x

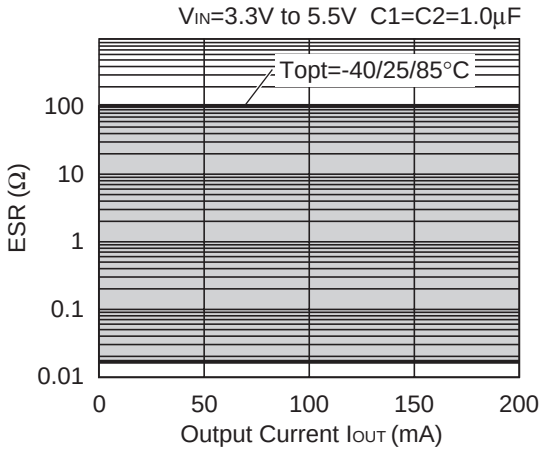

PACKAGE INFORMATION

Power Dissipation (DFN(PL)1612-4)

This specification is at mounted on board. Power Dissipation (P_D) depends on conditions of mounting on board. This specification is based on the measurement at the condition below:

Measurement Conditions

	Standard Test Land Pattern
Environment	Mounting on Board (Wind velocity=0m/s)
Board Material	Glass cloth epoxy plastic (Double sided)
Board Dimensions	40mm*40mm*1.6mm
Copper Ratio	Top side: Approx. 50%, Back side: Approx. 50%
Through-holes	ϕ 0.54mm * 24pcs

Measurement Result (Ta=25°C)

	Standard Test Land Pattern
Power Dissipation	610mW (Tjmax=125°C) 762mW(Tjmax=150°C)
Thermal Resistance	θja = (125-25°C)/0.61W= 164°C/W
	θjc = 48°C/W

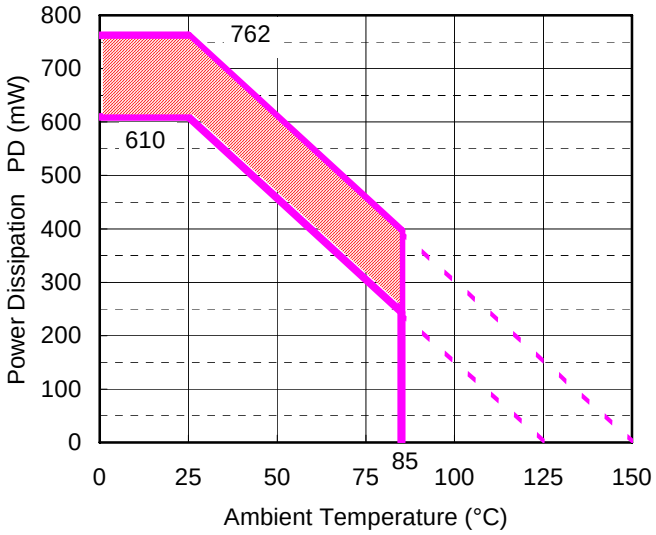

Power Dissipation

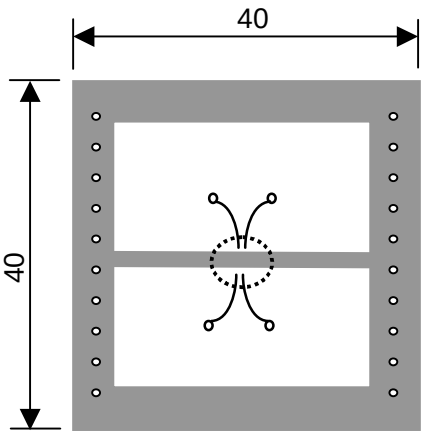

Measurent Board Pattern

IC Mount Area Unit : mm

The above graph shows the Power Dissipation of the package based on Tjmax=125°C and Tjmax=150°C.
Operating the IC in the shaded area in the graph might have an influence it's lifetime.
Operating time must be within the time limit described in the table below, in case of operating in the shaded area.

Operating Time	Estimated years (Operating four hours/day)
13,000 hours	9years

Package Dimensions (DFN(PL)1612-4)

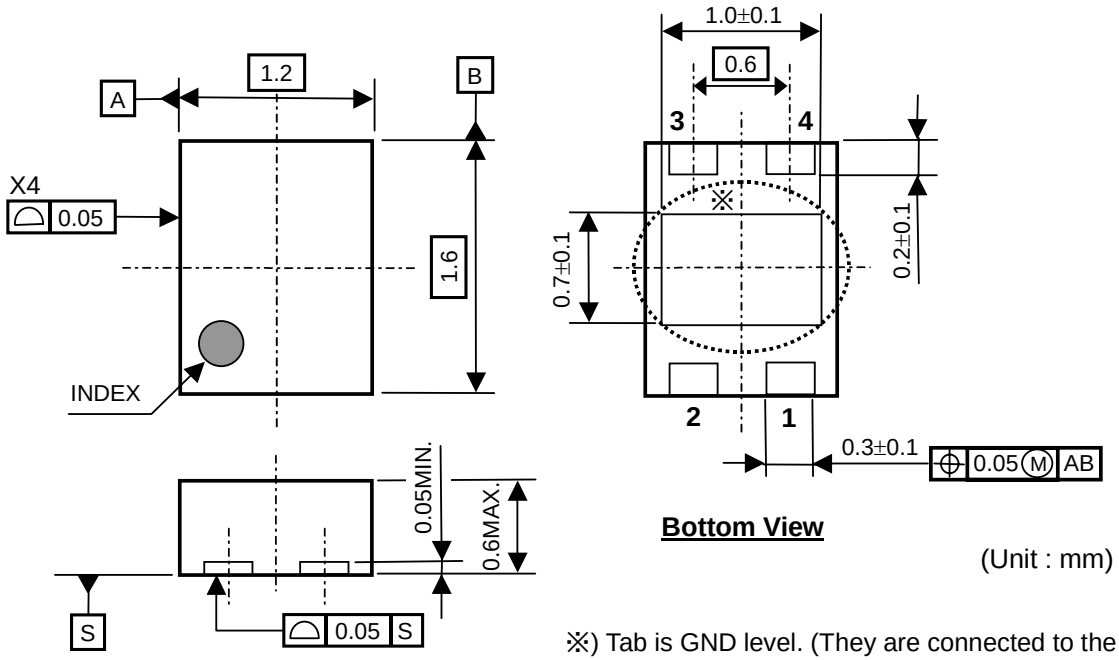

(Unit : mm)

※) Tab is GND level. (They are connected to the reverse side of this IC.)
The tab is better to be connected to the GND, but leaving it open is also acceptable.

Mark Specifications (DFN(PL)1612-4)

①② : Product Code …Refer to the marking list table
③④ : Lot No ……. Alphanumeric serial number.

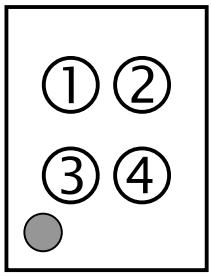

RP100K Series marking list table

PKG: DFN(PL)1612-4

RP100KxxxB

Part Number	①②	Vset
RP100K121B	1A	1.2V
RP100K131B	1B	1.3V
RP100K151B	1C	1.5V
RP100K181B	1D	1.8V
RP100K181B5	1E	1.85V
RP100K191B	1F	1.9V
RP100K201B	1G	2.0V
RP100K251B	1H	2.5V
RP100K261B	1J	2.6V
RP100K271B	1K	2.7V
RP100K281B	1L	2.8V
RP100K281B5	1M	2.85V
RP100K291B	1N	2.9V
RP100K301B	1P	3.0V
RP100K311B	1Q	3.1V
RP100K331B	1R	3.3V
RP100K211B	1S	2.1V
RP100K121B5	1T	1.25V
RP100K241B	1U	2.4V
RP100K221B	1V	2.2V

RP100KxxxD

Part Number	①②	Vset
RP100K121D	2A	1.2V
RP100K131D	2B	1.3V
RP100K151D	2C	1.5V
RP100K181D	2D	1.8V
RP100K181D5	2E	1.85V
RP100K191D	2F	1.9V
RP100K201D	2G	2.0V
RP100K251D	2H	2.5V
RP100K261D	2J	2.6V
RP100K271D	2K	2.7V
RP100K281D	2L	2.8V
RP100K281D5	2M	2.85V
RP100K291D	2N	2.9V
RP100K301D	2P	3.0V
RP100K311D	2Q	3.1V
RP100K331D	2R	3.3V
RP100K211D	2S	2.1V
RP100K121D5	2T	1.25V
RP100K241D	2U	2.4V
RP100K221D	2V	2.2V

Power Dissipation (SOT-23-5)

This specification is at mounted on board. Power Dissipation (P_D) depends on conditions of mounting on board. This specification is based on the measurement at the condition below:
(Power Dissipation (SOT-23-5) is substitution of SOT-23-6.)

Measurement Conditions

	Standard Test Land Pattern
Environment	Mounting on Board (Wind velocity=0m/s)
Board Material	Glass cloth epoxy plastic (Double sided)
Board Dimensions	40mm * 40mm * 1.6mm
Copper Ratio	Top side: Approx. 50%, Back side: Approx. 50%
Through-holes	ϕ 0.5mm * 44pcs

Measurement Result (Ta=25°C)

	Standard Test Land Pattern	**Free Air**
Power Dissipation	420mW(Tjmax=125°C) 525mW(Tjmax=150°C)	250mW(Tjmax=125°C)
Thermal Resistance	θja = (125-25°C)/0.42W= 238°C/W	400°C/W

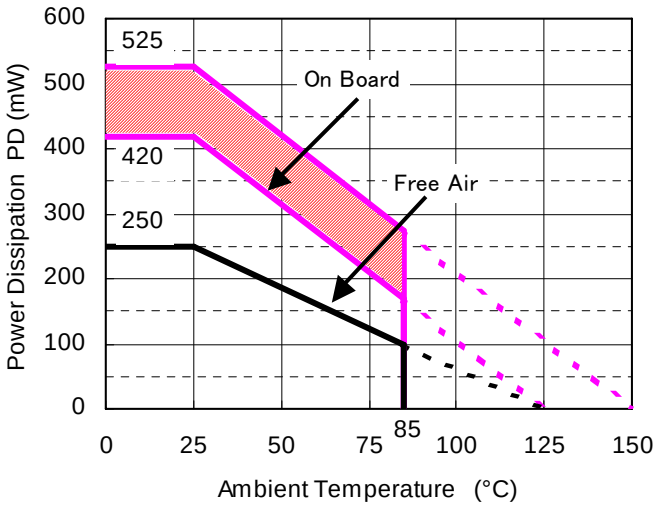

Power Dissipation

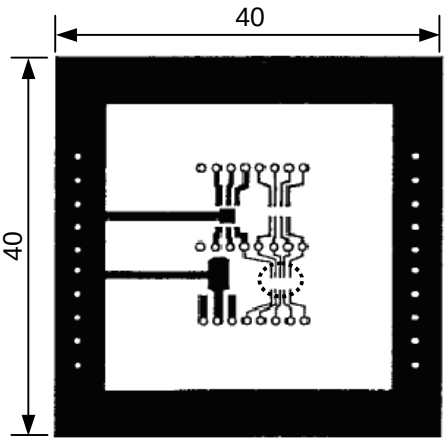

Measurement Board Pattern

IC Mount Area (Unit: mm)

The above graph shows the Power Dissipation of the package based on Tjmax=125°C and Tjmax=150°C.
Operating the IC in the shaded area in the graph might have an influence it's lifetime.
Operating time must be within the time limit described in the table below, in case of operating in the shaded area.

Operating Time	Estimated years (Operating four hours/day)
9,000 hours	6years

Package Dimensions (SOT-23-5)

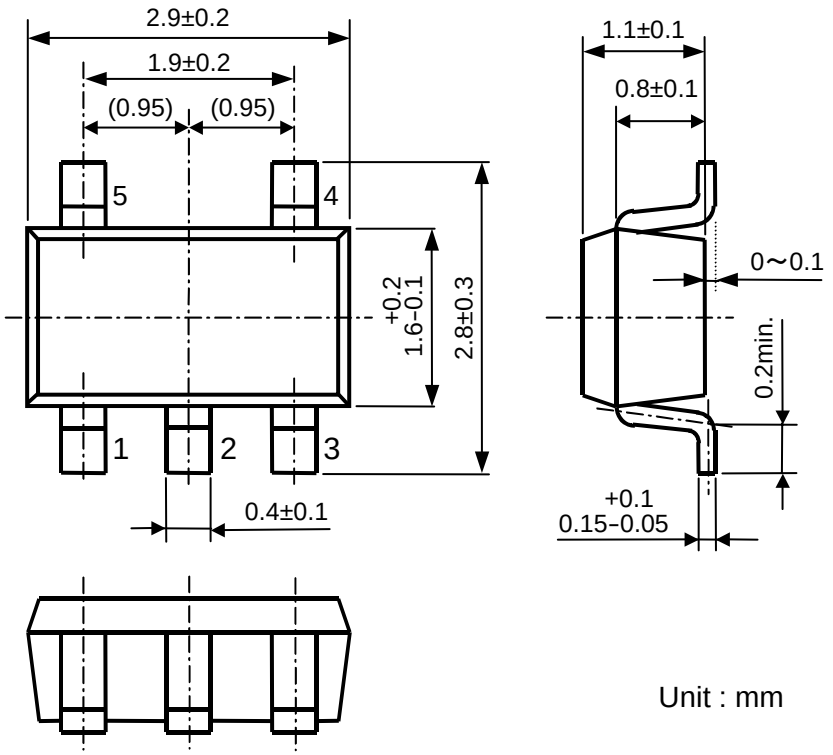

Unit : mm

Mark Specifications (SOT-23-5)

①②③ : Product Code … Refer to the marking list table

④⑤ : Lot No …….. Alphanumeric serial number.

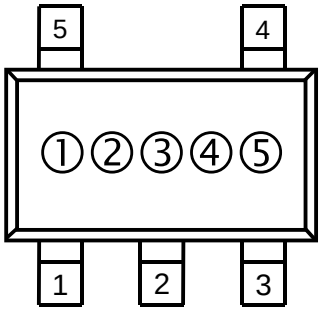

RP100N Series marking list table

PKG: SOT-23-5

RP100NxxxB

Part Number	①②③	Vset
RP100N121B	50A	1.2V
RP100N131B	50B	1.3V
RP100N151B	50C	1.5V
RP100N181B	50D	1.8V
RP100N181B5	50E	1.85V
RP100N191B	50F	1.9V
RP100N201B	50G	2.0V
RP100N251B	50H	2.5V
RP100N261B	50J	2.6V
RP100N271B	50K	2.7V
RP100N281B	50L	2.8V
RP100N281B5	50M	2.85V
RP100N291B	50N	2.9V
RP100N301B	50P	3.0V
RP100N311B	50Q	3.1V
RP100N331B	50R	3.3V
RP100N211B	50S	2.1V
RP100N121B5	50T	1.25V
RP100N241B	50U	2.4V
RP100N221B	50V	2.2V

RP100NxxxD

Part Number	①②③	Vset
RP100N121D	51A	1.2V
RP100N131D	51B	1.3V
RP100N151D	51C	1.5V
RP100N181D	51D	1.8V
RP100N181D5	51E	1.85V
RP100N191D	51F	1.9V
RP100N201D	51G	2.0V
RP100N251D	51H	2.5V
RP100N261D	51J	2.6V
RP100N271D	51K	2.7V
RP100N281D	51L	2.8V
RP100N281D5	51M	2.85V
RP100N291D	51N	2.9V
RP100N301D	51P	3.0V
RP100N311D	51Q	3.1V
RP100N331D	51R	3.3V
RP100N211D	51S	2.1V
RP100N121D5	51T	1.25V
RP100N241D	51U	2.4V
RP100N221D	51V	2.2V

1. The products and the product specifications described in this document are subject to change or discontinuation of production without notice for reasons such as improvement. Therefore, before deciding to use the products, please refer to our sales representatives for the latest information thereon.
2. The materials in this document may not be copied or otherwise reproduced in whole or in part without prior written consent of our company.
3. Please be sure to take any necessary formalities under relevant laws or regulations before exporting or otherwise taking out of your country the products or the technical information described herein.
4. The technical information described in this document shows typical characteristics of and example application circuits for the products. The release of such information is not to be construed as a warranty of or a grant of license under our company's or any third party's intellectual property rights or any other rights.
5. The products listed in this document are intended and designed for use as general electronic components in standard applications (office equipment, telecommunication equipment, measuring instruments, consumer electronic products, amusement equipment etc.). Those customers intending to use a product in an application requiring extreme quality and reliability, for example, in a highly specific application where the failure or misoperation of the product could result in human injury or death (aircraft, spacevehicle, nuclear reactor control system, traffic control system, automotive and transportation equipment, combustion equipment, safety devices, life support system etc.) should first contact us.
6. We are making our continuous effort to improve the quality and reliability of our products, but semiconductor products are likely to fail with certain probability. In order to prevent any injury to persons or damages to property resulting from such failure, customers should be careful enough to incorporate safety measures in their design, such as redundancy feature, fire containment feature and fail-safe feature. We do not assume any liability or responsibility for any loss or damage arising from misuse or inappropriate use of the products.
7. Anti-radiation design is not implemented in the products described in this document.
8. The X-ray exposure can influence functions and characteristics of the products. Confirm the product functions and characteristics in the evaluation stage.
9. WLCSP products should be used in light shielded environments. The light exposure can influence functions and characteristics of the products under operation or storage.
10. There can be variation in the marking when different AOI (Automated Optical Inspection) equipment is used. In the case of recognizing the marking characteristic with AOI, please contact our sales or our distributor before attempting to use AOI.
11. Please contact our sales representatives should you have any questions or comments concerning the products or the technical information.

NISSHINBO

Nisshinbo Micro Devices Inc.

Official website
https://www.nisshinbo-microdevices.co.jp/en/
Purchase information
https://www.nisshinbo-microdevices.co.jp/en/buy/

ENTEGRECİ

Bu belge www.entegreci.com üzerinden sunulmaktadır.

Elektronik komponent tedarikinde Entegreci

Entegreci, Eskişehir merkezli, Türkiye geneline satış yapan bir elektronik komponent mağazasıdır. Entegreler (IC), mikrodenetleyiciler, transistörler, diyotlar, pasif elemanlar, konnektörler, modüller ve geliştirme kartları tek adetten seri üretim adetlerine kadar satılır. Ürün sayfalarında güncel stok durumunu, fiyatı ve datasheet bağlantısını bulabilirsiniz.

Parça koduyla arama

Üretici parça numarasını yazın; stok ve fiyatı hemen görün.

www.entegreci.com

Ürün kategorileri

Entegreden kapasitöre tüm elektronik komponent kategorileri.

Kategorilere göz atın

Üreticiler

Aradığınız üreticinin ürünlerini tek sayfada inceleyin.

Üreticileri görün

Toplu alım ve teklif

Listede olmayan ya da yüksek adetli parçalar için teklif isteyin.

Teklif isteyin

www.entegreci.com | **destek@entegreci.com** | **0850 305 90 34**

Entegreci is an online electronic components store based in Türkiye. Search by manufacturer part number to see stock, prices and datasheets for integrated circuits, microcontrollers, transistors, passive components and connectors, or request a quote for parts that are not listed.

Bu sayfa Entegreci tarafından eklenmiştir. Belgenin önceki sayfaları asıl yayıncısına aittir ve içeriği değiştirilmemiştir; en güncel sürüm için belgenin yayıncısına başvurun.