0.6% ACCURACY LOW NOISE 300mA LDO REGULATOR

NO.EA-167-160425

OUTLINE

The RP101x Series are CMOS-based voltage regulator ICs with high output voltage accuracy, extremely low supply current, low ON-resistance, and high ripple rejection. Each of these ICs consists of a voltage reference unit, an error amplifier, resistor-net for voltage setting, a current limit circuit, and a chip enable circuit.

These ICs perform with low dropout voltage and a chip enable function. The line transient response and load transient response of the RP101x Series are excellent, thus these ICs are very suitable for the power supply for hand-held communication equipment.

The output voltage of these ICs is fixed with high accuracy. Since the packages for these ICs are SOT-23-5 and DFN(PL)1612-4 (t=0.6mm type) or DFN(PL)1612-4B (t=0.4mm type), therefore high density mounting of the ICs on boards is possible.

FEATURES

- Supply Current ..... Typ. 18μA
- Standby Current ..... Typ. 0.1μA
- Dropout Voltage..... Typ. 0.13V (I_{OUT}=150mA, V_{OUT}=2.8V)
- Ripple Rejection ..... Typ. 75dB (f=1kHz)
- Temperature-Drift Coefficient of Output Voltage ..... Typ. ±30ppm/°C
- Line Regulation ..... Typ. 0.02%/V
- Output Voltage Accuracy..... ±0.6%
- Packages..... DFN(PL)1612-4, DFN(PL)1612-4B, SOT-23-5
- Input Voltage Range..... 1.7V to 5.25V
- Output Voltage Range..... 1.2V to 3.3V (0.1V steps)
  (For other voltages, please refer to MARK INFORMATIONS.)
- Built-in Fold Back Protection Circuit..... Typ. 40mA (Current at short mode)
- Ceramic capacitors are recommended to be used with this IC .... 1.0μF or more

APPLICATIONS

- Power source for portable communication equipment.
- Power source for electrical appliances such as cameras, VCRs and camcorders.
- Power source for battery-powered equipment.
- Power source for home appliances.

BLOCK DIAGRAMS

RP101xxxxB

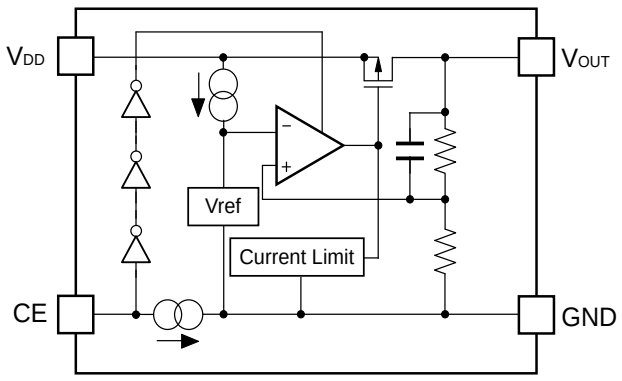

RP101xxxxD

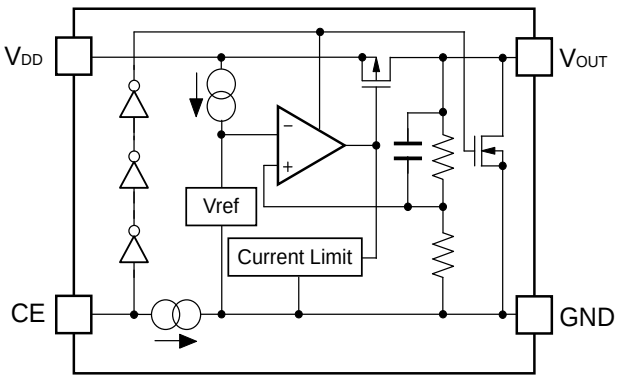

SELECTION GUIDE

The output voltage, auto discharge function, package, and the taping type, etc. for the ICs can be selected at the user's request.

Product Name	Package	Quantity per Reel	Pb Free	Halogen Free
RP101Kxx1∗-TR	DFN(PL)1612-4(t=0.6mm)	5,000 pcs	Yes	Yes
RP101Kxx2∗-TR	DFN(PL)1612-4B (t=0.4mm)	5,000 pcs	Yes	Yes
RP101Nxx1∗-TR-FE	SOT-23-5	3,000 pcs	Yes	Yes

xx: The output voltage can be designated in the range from 1.2V(12) to 3.3V(33) in 0.1V steps.
(For other voltages, please refer to MARK INFORMATIONS.)

∗ : CE pin polarity and auto discharge function at off state are options as follows.
(B) "H" active, without auto discharge function at off state
(D) "H" active, with auto discharge function at off state

PIN CONFIGURATIONS

● **DFN(PL)1612-4, DFN(PL)1612-4B**

Top View

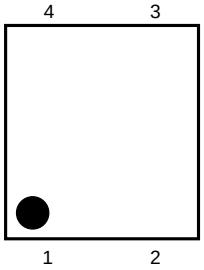

Bottom View

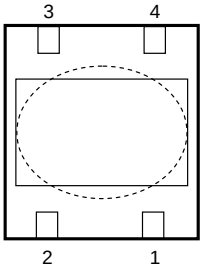

● **SOT-23-5**

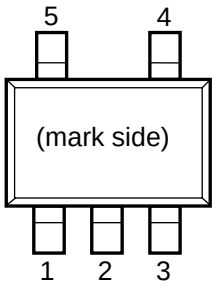

PIN DESCRIPTIONS

● **DFN(PL)1612-4, DFN(PL)1612-4B**

Pin No	Symbol	Pin Description
1	V_{OUT}	Output Pin
2	GND	Ground Pin
3	CE	Chip Enable Pin ("H" Active)
4	V_{DD}	Input Pin

∗) Tab is GND level. (They are connected to the reverse side of this IC.)
The tab is better to be connected to the GND, but leaving it open is also acceptable.

● **SOT-23-5**

Pin No	Symbol	Pin Description
1	V_{DD}	Input Pin
2	GND	Ground Pin
3	CE	Chip Enable Pin ("H" Active)
4	NC	No Connection
5	V_{OUT}	Output Pin

ABSOLUTE MAXIMUM RATINGS

Symbol	Item	Rating	Unit
V_{IN}	Input Voltage	6.0	V
V_{CE}	Input Voltage (CE Pin)	6.0	V
V_{OUT}	Output Voltage	−0.3 to V_{IN}+0.3	V
I_{OUT}	Output Current	310	mA
P_D	Power Dissipation (DFN(PL)1612-4) *	610	mW
	Power Dissipation (DFN(PL)1612-4B) *	580	
	Power Dissipation (SOT-23-5) *	420	
Topt	Operating Temperature Range	−40 to 85	°C
Tstg	Storage Temperature Range	−55 to 125	°C

∗) For Power Dissipation, please refer to PACKAGE INFORMATION.

ABSOLUTE MAXIMUM RATINGS

Electronic and mechanical stress momentarily exceeded absolute maximum ratings may cause the permanent damages and may degrade the life time and safety for both device and system using the device in the field. The functional operation at or over these absolute maximum ratings is not assured.

ELECTRICAL CHARACTERISTICS

- **RP101xxxxB/D**

V_{IN}=Set V_{OUT}+1V, I_{OUT}=1mA, C_{IN}=C_{OUT}=1μF, unless otherwise noted.

Topt=25°C

Symbol	Item	Conditions		Min.	Typ.	Max.	Unit
V_{OUT}	Output Voltage		V_{OUT} > 2.0V	×0.994		×1.006	V
			V_{OUT} ≤ 2.0V	−12		+12	mV
I_{OUT}	Output Current			300			mA
ΔV_{OUT}/ ΔI_{OUT}	Load Regulation	1mA ≤ I_{OUT} ≤ 150mA			20	40	mV
V_{DIF}	Dropout Voltage	I_{OUT}=150mA	1.2V ≤ V_{OUT} < 1.5V		0.40	0.50	V
			1.5V ≤ V_{OUT} < 1.7V		0.24	0.38	
			1.7V ≤ V_{OUT} < 2.0V		0.21	0.34	
			2.0V ≤ V_{OUT} < 2.5V		0.17	0.30	
			2.5V ≤ V_{OUT} < 2.8V		0.14	0.25	
			2.8V ≤ V_{OUT} ≤ 3.3V		0.13	0.23	
I_{SS}	Supply Current	I_{OUT}=0mA			18	25	μA
$I_{standby}$	Standby Current	V_{CE}=0V			0.1	2.0	μA
$\Delta V_{OUT}/\Delta V_{IN}$	Line Regulation	Set V_{OUT}+0.5V ≤ V_{IN} ≤ 5.0V			0.02	0.10	%/V
RR	Ripple Rejection	f=1kHz, Ripple 0.2Vp-p V_{IN}=Set V_{OUT}+1V, I_{OUT}=30mA (In case that V_{OUT} ≤ 2.0V, V_{IN}=3.0V)			75		dB
V_{IN}	Input Voltage*1			1.7		5.25	V
ΔV_{OUT}/ $\Delta Topt$	Output Voltage Temperature Coefficient	−40°C ≤ Topt ≤ 85°C			±30		ppm /°C
I_{SC}	Short Current Limit	V_{OUT}=0V			40		mA
I_{PD}	CE Pull-down Current				0.3		μA
V_{CEH}	CE Input Voltage "H"			1.1			V
V_{CEL}	CE Input Voltage "L"					0.3	V
en	Output Noise	BW=10Hz to 100kHz I_{OUT}=30mA			30		μVrms
R_{LOW}	Low Output Nch Tr. ON Resistance (of D version)	V_{IN}=4.0V, V_{CE}=0V			30		Ω

*) The maximum Input Voltage of the ELECTRICAL CHARACTERISTICS is 5.25V. In case of exceeding this specification, the IC must be operated on condition that the Input Voltage is up to 5.5V and the total operating time is within 500hrs.

RECOMMENDED OPERATING CONDITIONS (ELECTRICAL CHARACTERISTICS)

All of electronic equipment should be designed that the mounted semiconductor devices operate within the recommended operating conditions. The semiconductor devices cannot operate normally over the recommended operating conditions, even if when they are used over such conditions by momentary electronic noise or surge. And the semiconductor devices may receive serious damage when they continue to operate over the recommended operating conditions.

TYPICAL APPLICATION

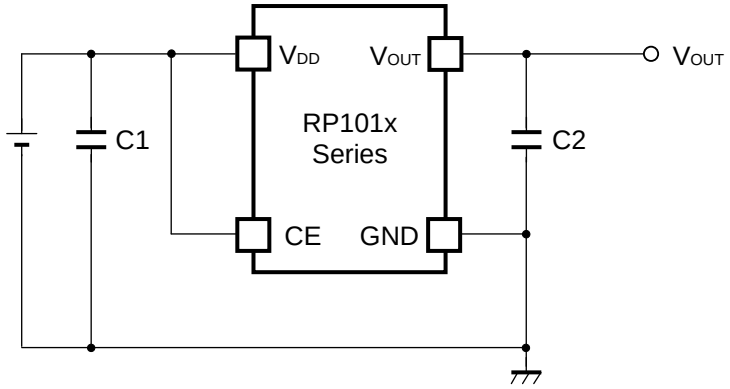

(External Components)
C2 1.0μF MURATA: GRM155B31A105KE15

TECHNICAL NOTES

When using these ICs, consider the following points:

Phase Compensation

In these ICs, phase compensation is made for securing stable operation even if the load current is varied. For this purpose, use a capacitor C2 with 1.0μF or more capacity.

Ceramic capacitors have different temperature characteristics and bias characteristics depending on their dimensions and manufacturers. If the setting voltage is 2.5V or more and the capacitor's dimensions for V_{OUT} equal to 1.0mm by 0.5mm or smaller than that, the capacitance value might be extremely low. As a result, the capacitance might be much less than expected. In such cases, the operation might be unstable at low temperature. (−20°C or less) In that case, use a larger capacity, or a large dimensions' capacitor. (For example 1.6mm by 0.8mm)

If a tantalum capacitor is selected as an output capacitor, large ESR may be a cause of unstable operation. Evaluate the operation of PCB with considerable frequency characteristics.

PCB Layout

Make V_{DD} and GND lines sufficient. If their impedance is high, noise pickup or unstable operation may result. Connect a capacitor C1 with a capacitance value as much as 1.0μF or more between V_{DD} and GND pin, and as close as possible to the pins.

Set external components, especially the output capacitor C2, as close as possible to the ICs, and make wiring as short as possible.

TEST CIRCUITS

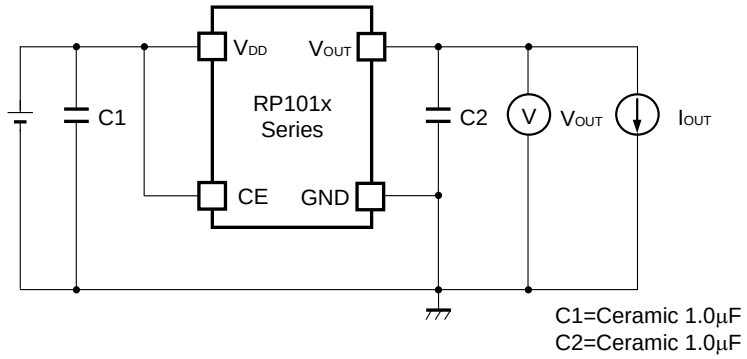

Basic Test Circuit

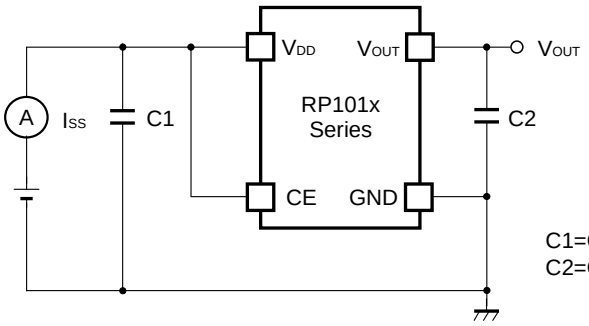

Test Circuit for Supply Current

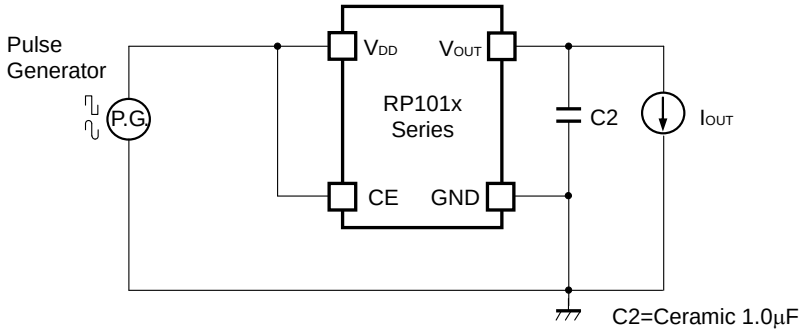

Test Circuit for Ripple Rejection

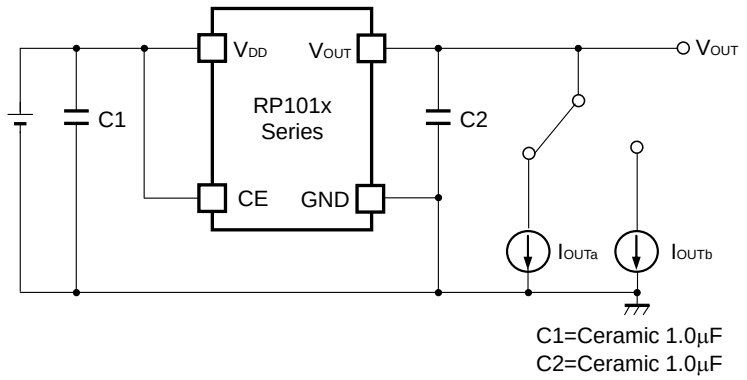

Test Circuit for Load Transient Response

TYPICAL CHARACTERISTICS

1) Output Voltage vs. Output Current (C1=1.0µF, C2=1.0µF, Topt=25°C)

RP101x12xx

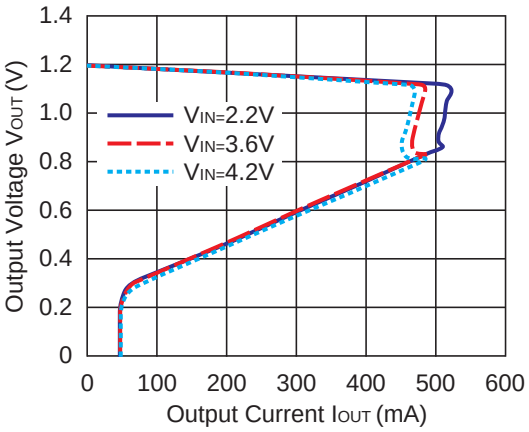

RP101x25xx

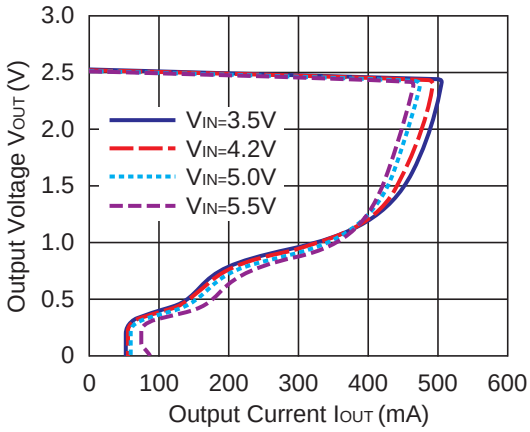

RP101x33xx

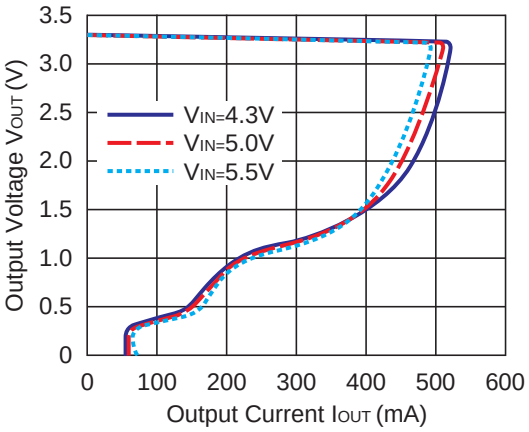

2) Output Voltage vs. Input Voltage (C1=1.0µF, C2=1.0µF, Topt=25°C)

RP101x12xx

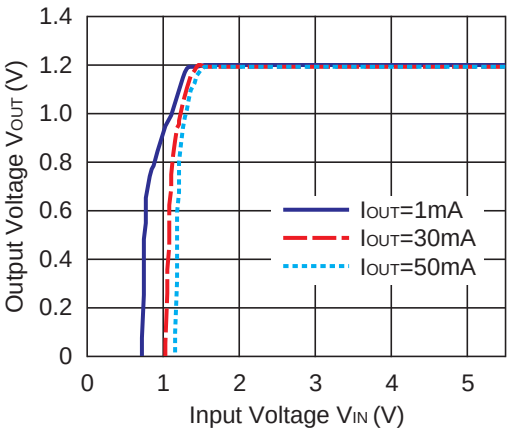

RP101x25xx

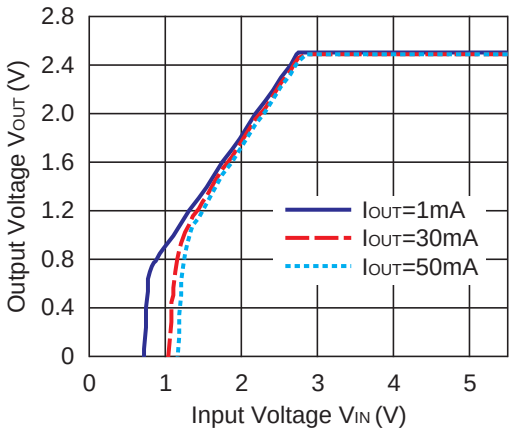

RP101x33xx

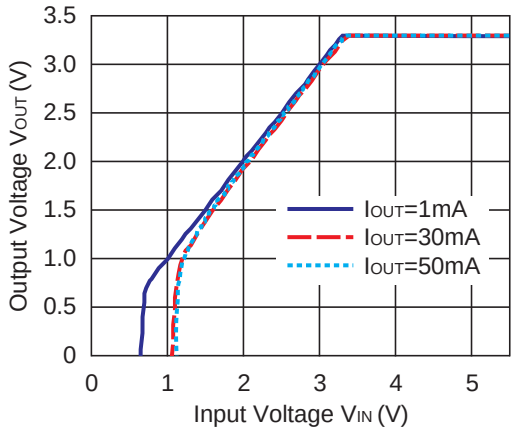

3) Supply Current vs. Input Voltage (C1=1.0μF, C2=1.0μF, Topt=25°C)

RP101x12xx

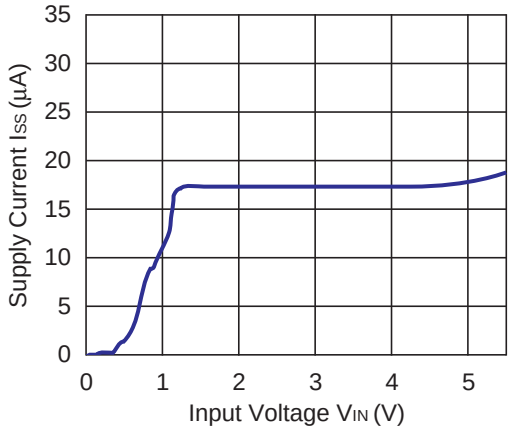

RP101x25xx

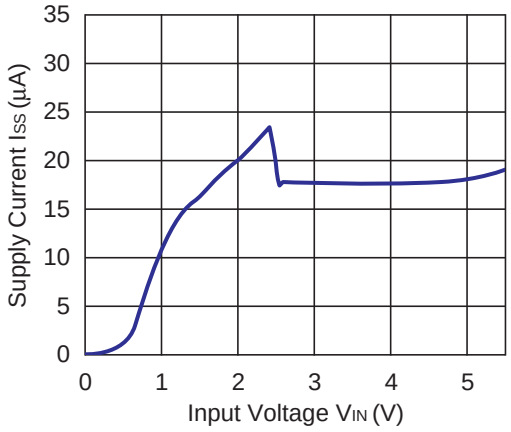

RP101x33xx

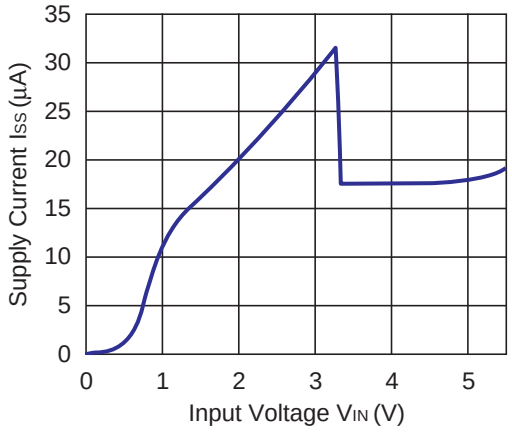

4) Output Voltage vs. Temperature (C1=1.0µF, C2=1.0µF, I_{OUT}=1mA)

RP101x12xx

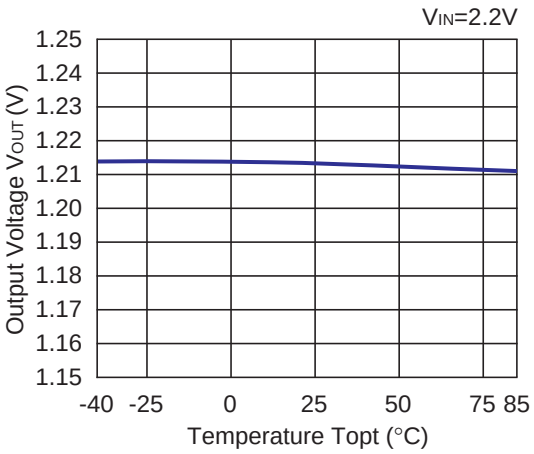

RP101x25xx

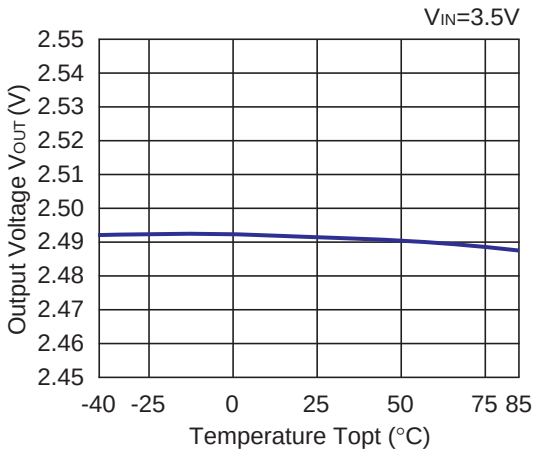

RP101x33xx

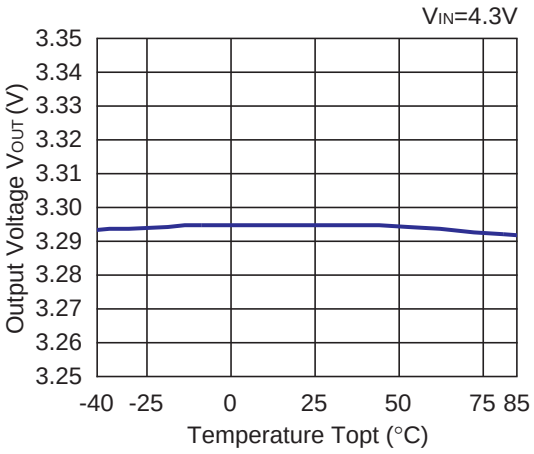

5) Supply Current vs. Temperature (C1=1.0µF, C2=1.0µF, I_{OUT}=0mA)

RP101x12xx

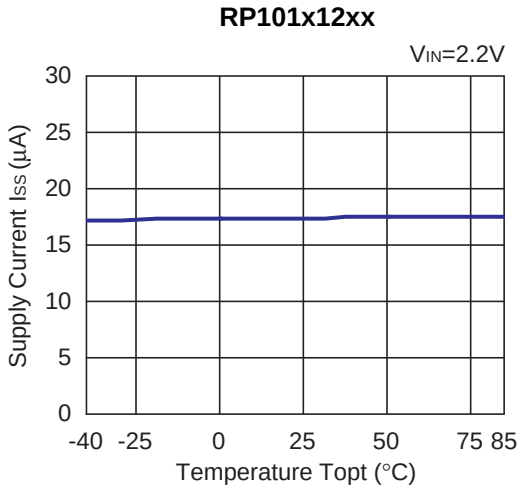

RP101x25xx

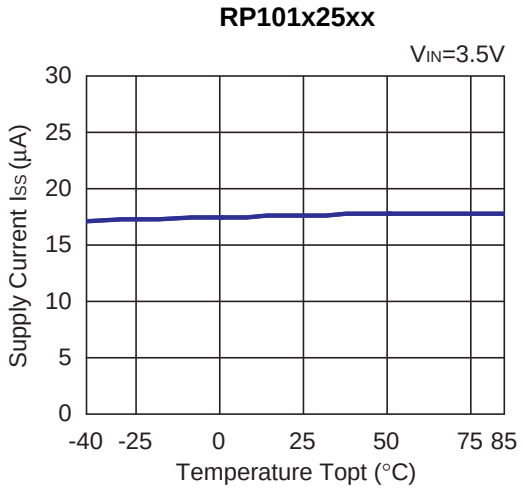

RP101x33xx

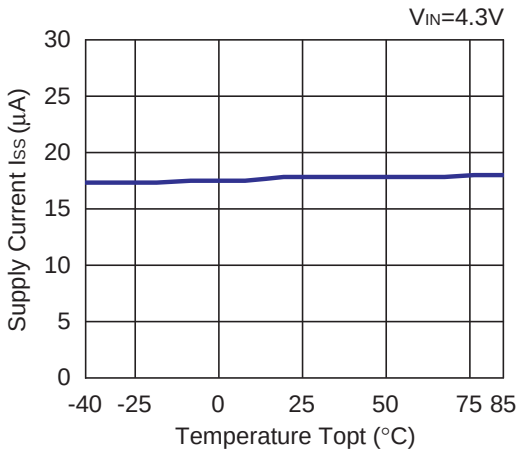

6) Dropout Voltage vs. Output Current (C1=1.0µF, C2=1.0µF)

RP101x12xx

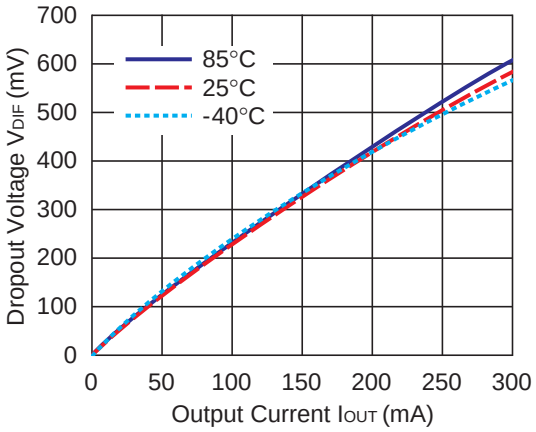

RP101x15xx

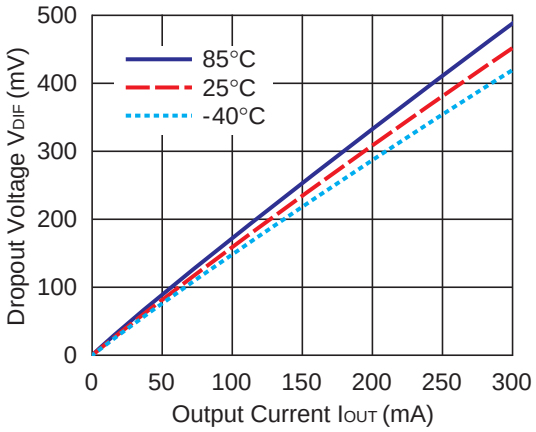

RP101x17xx

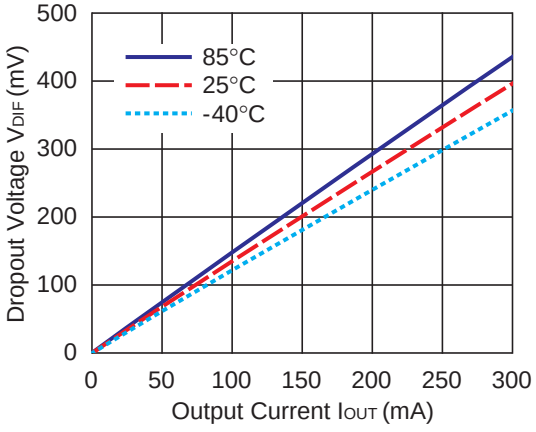

RP101x20xx

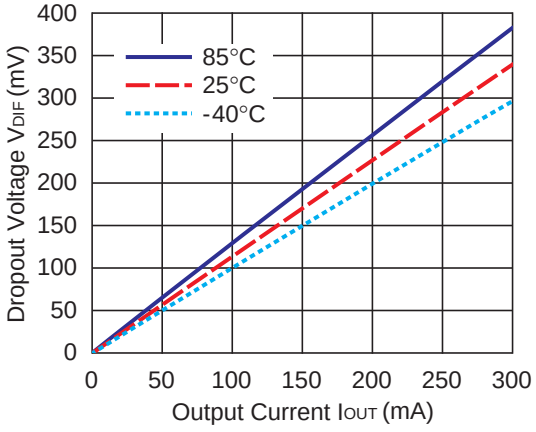

RP101x25xx

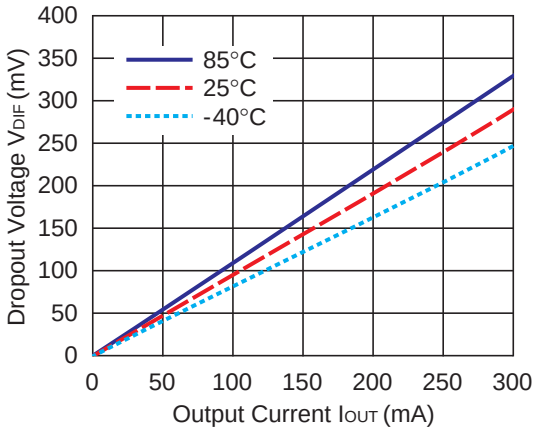

RP101x28xx

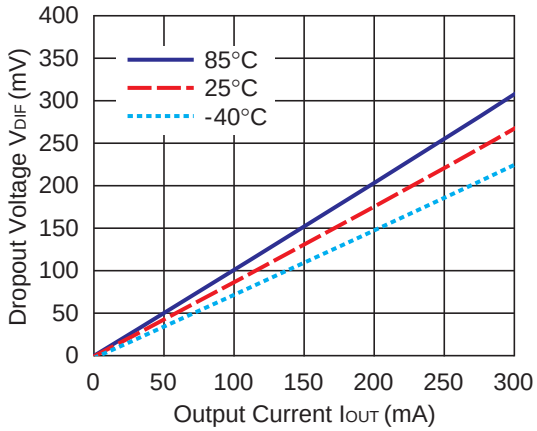

RP101x33xx

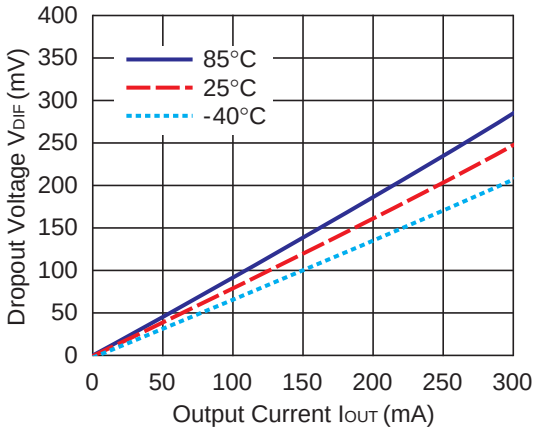

7) Dropout Voltage vs. Set Output Voltage (C1=1.0μF, C2=1.0μF, Topt=25°C)

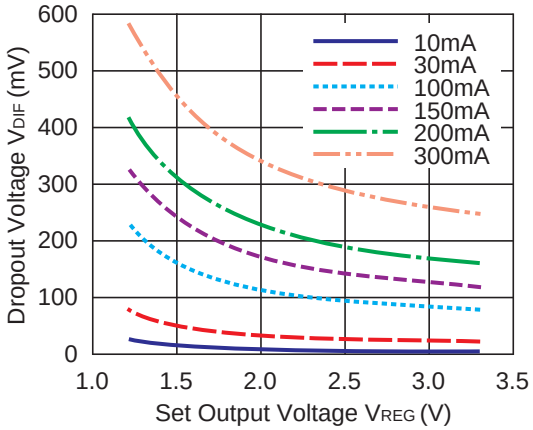

8) Ripple Rejection vs. Input Bias Voltage (C1=none, C2=1.0μF, Ripple=0.2Vp-p, Topt=25°C)

RP101x12xx

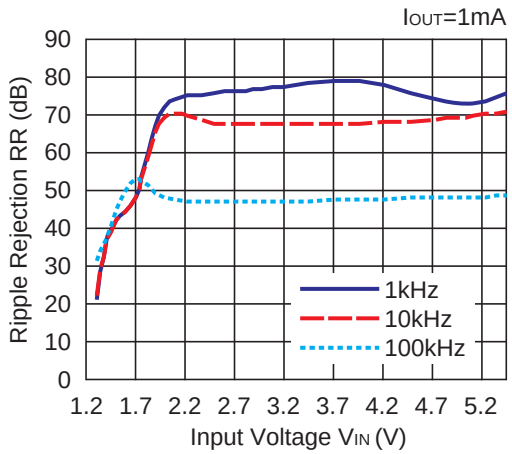

RP101x12xx

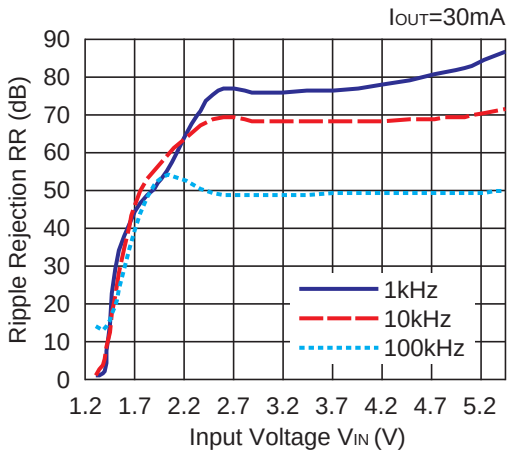

RP101x28xx

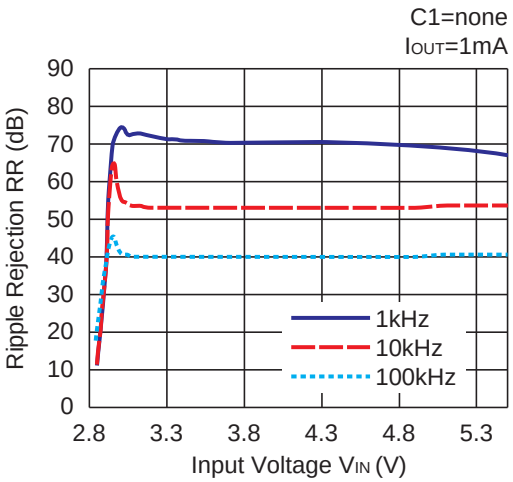

RP101x28xx

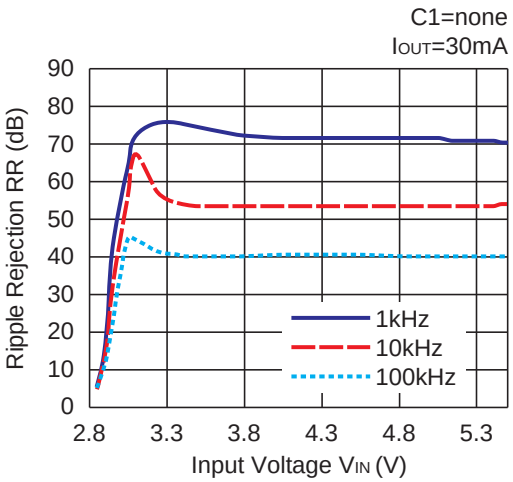

9) Ripple Rejection vs. Frequency (C1=none, C2=1.0μF, Ripple=0.2Vp-p)

RP101x12xx

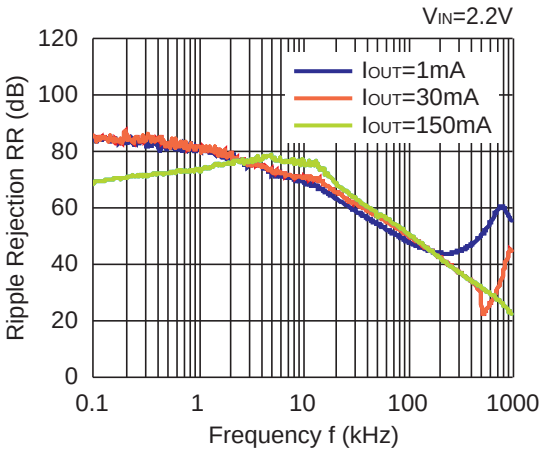

RP101x25xx

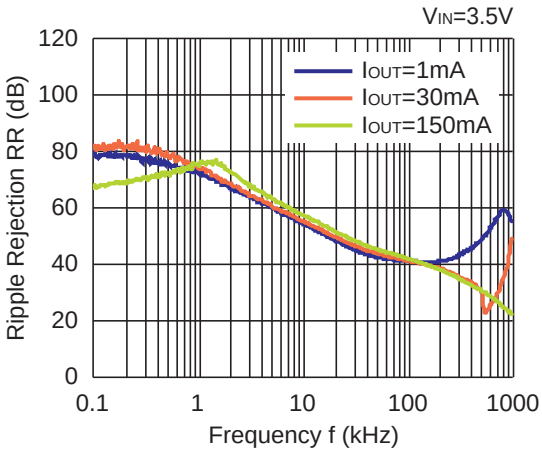

RP101x33xx

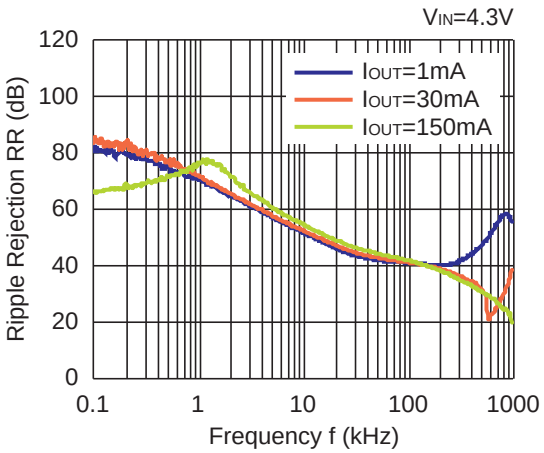

RP101x12xx

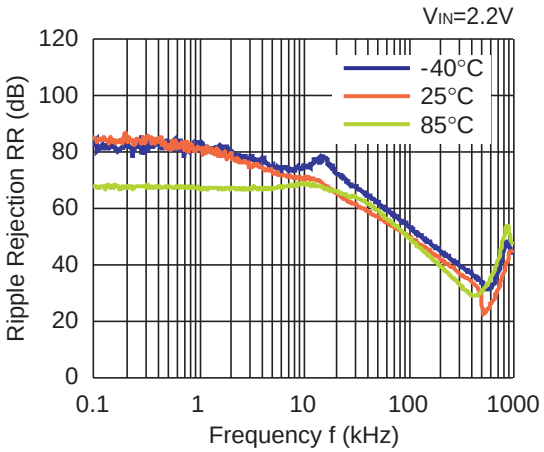

RP101x25xx

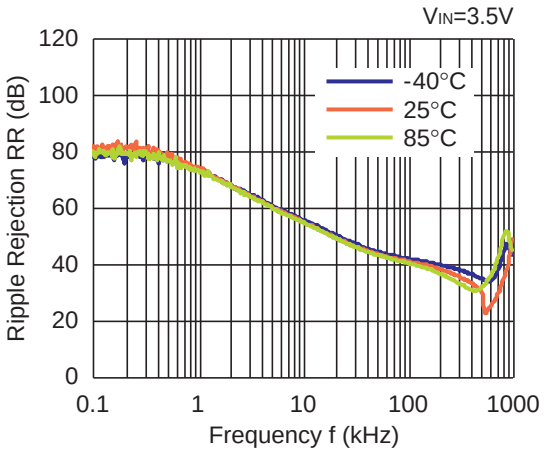

RP101x33xx

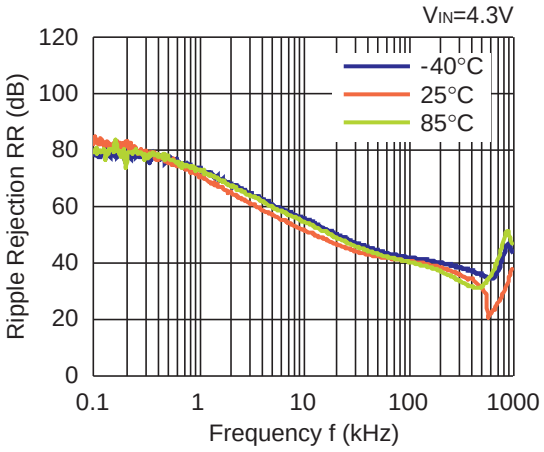

10) Input Transient Response (I_{OUT}=30mA, tr=tf=5µs, Topt=25°C)

RP101x12xx

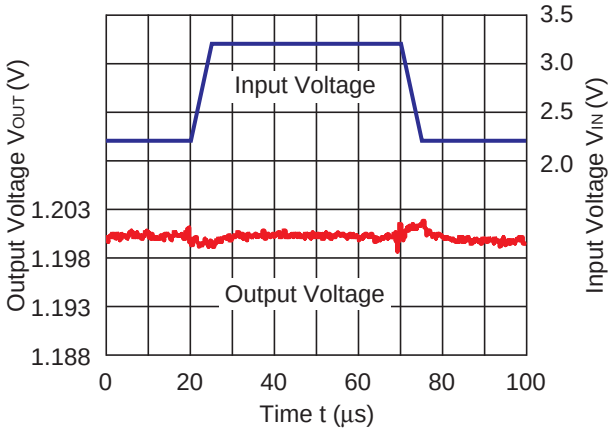

RP101x25xx

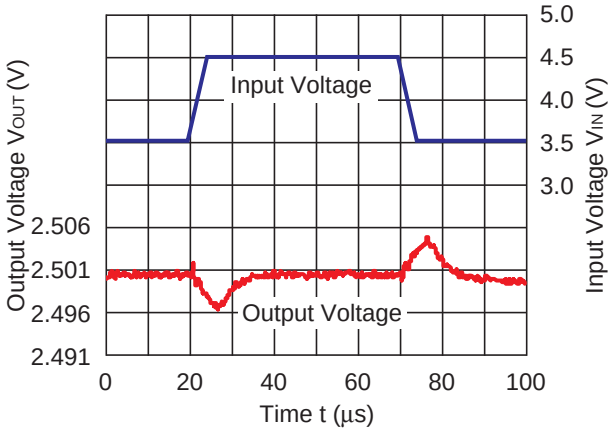

RP101x33xx

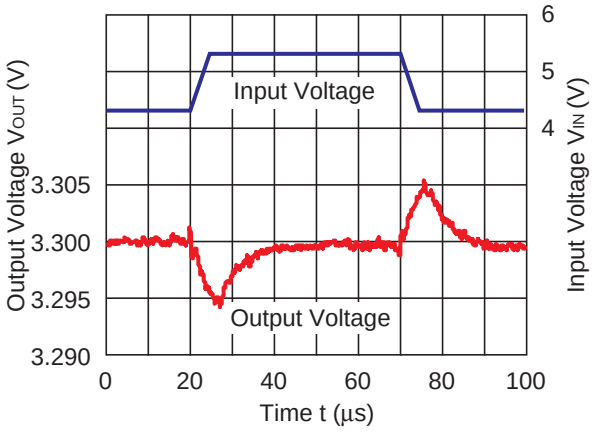

11) Load Transient Response (C2=1.0µF, Topt=25°C)

RP101x12xx

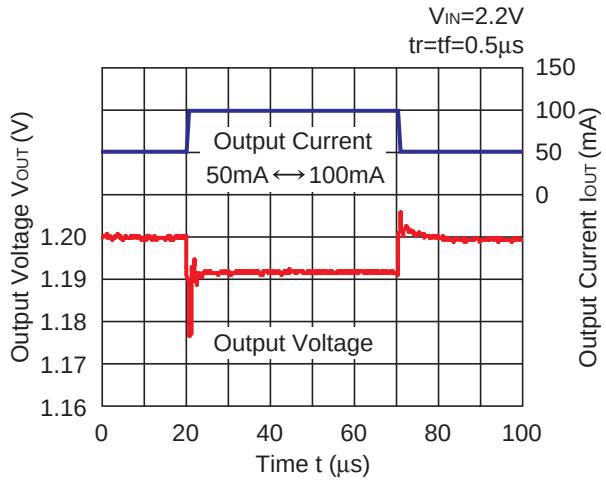

RP101x25xx

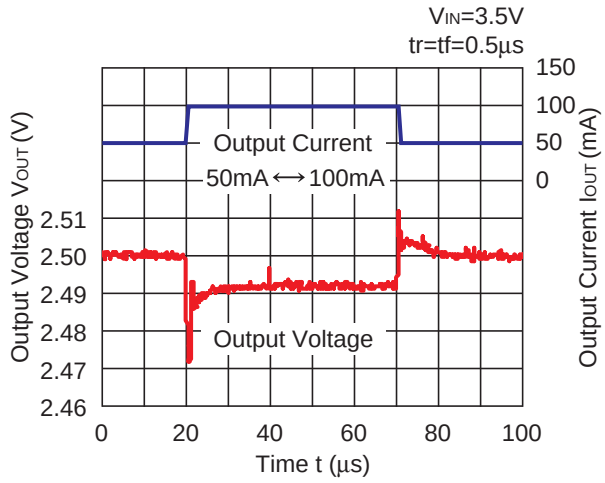

RP101x33xx

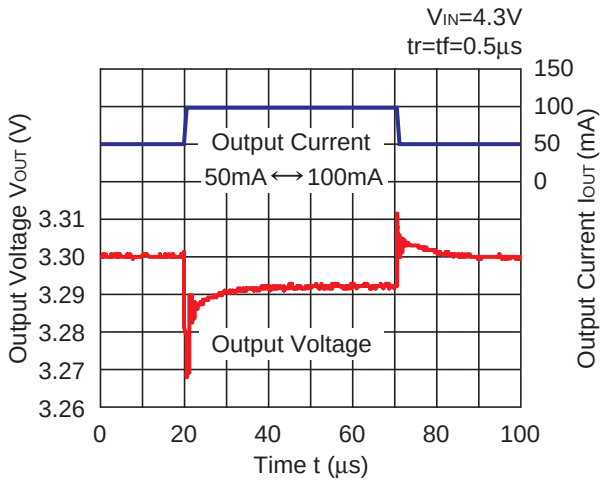

RP101x12xx

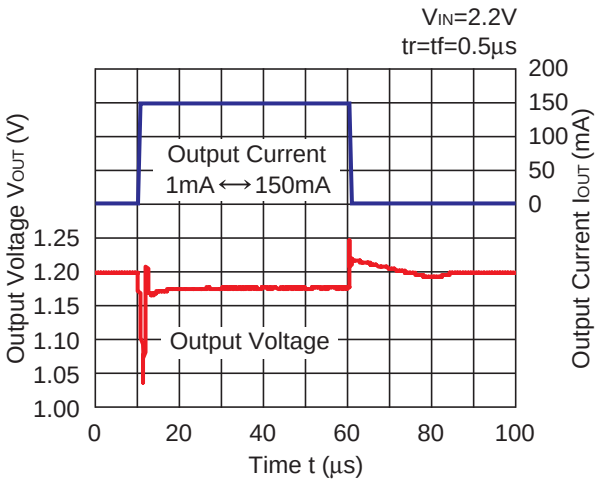

RP101x25xx

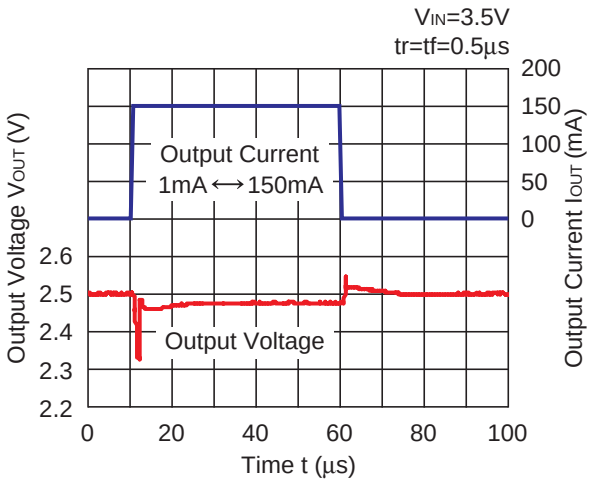

RP101x33xx

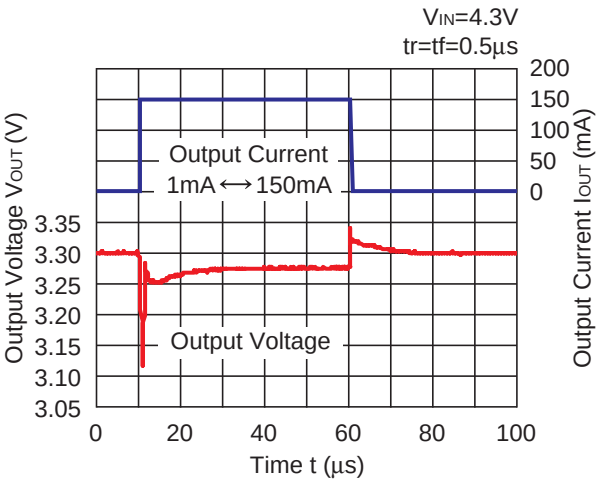

RP101x12xx

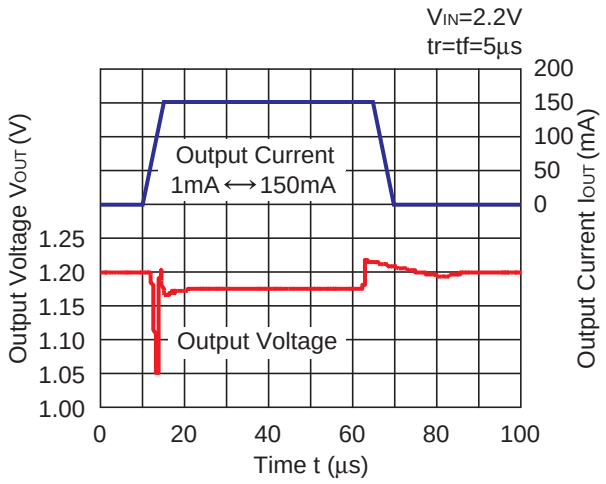

RP101x25xx

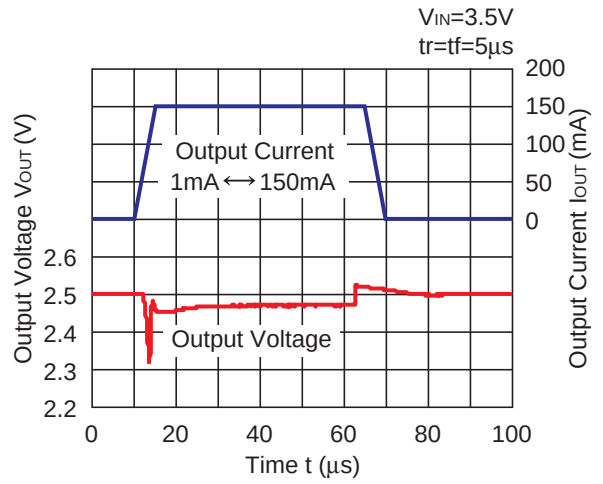

RP101x33xx

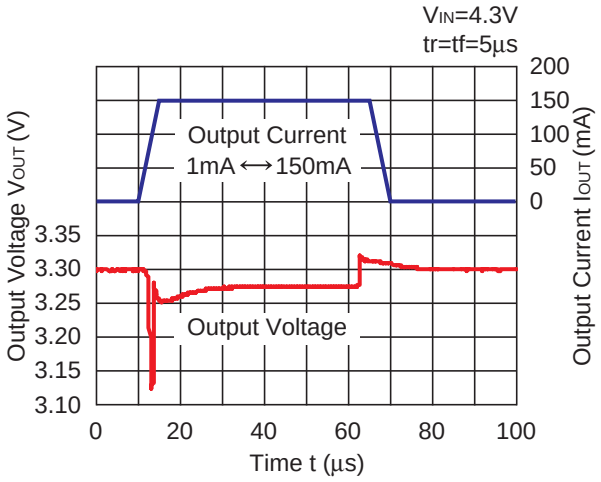

12) Turn On Speed with CE pin (C1=1.0µF, C2=1.0µF, Topt=25°C)

RP101x12xx

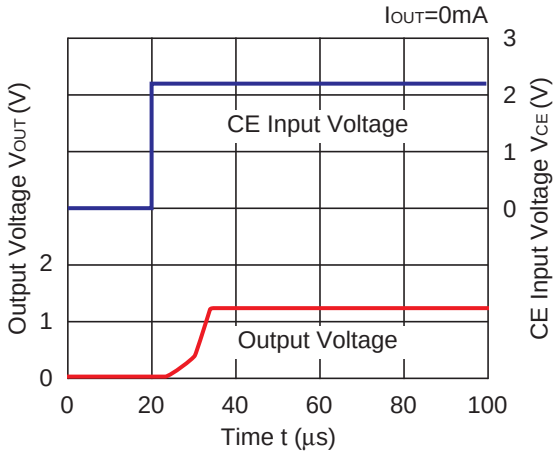

RP101x12xx

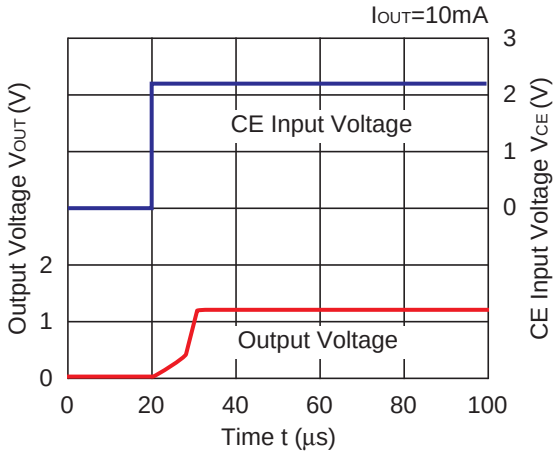

RP101x12xx

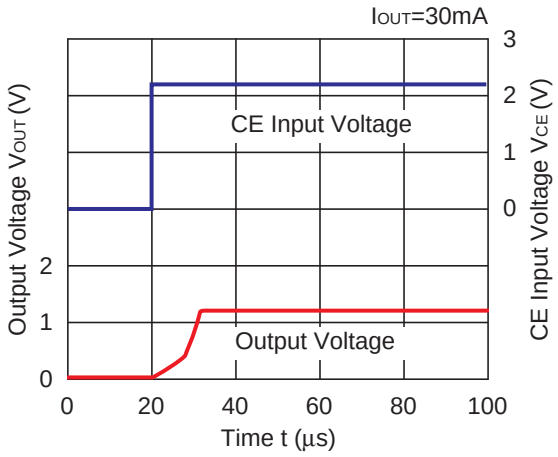

RP101x12xx

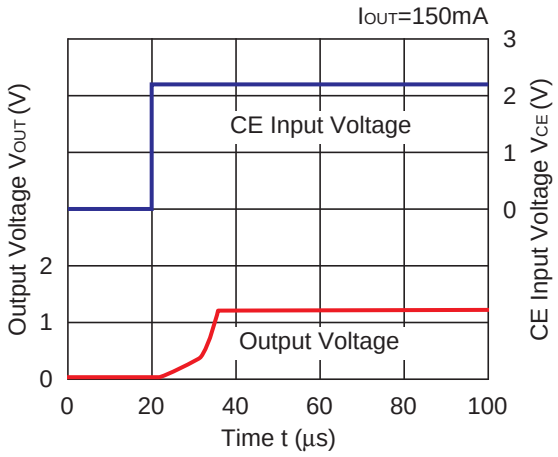

RP101x25xx

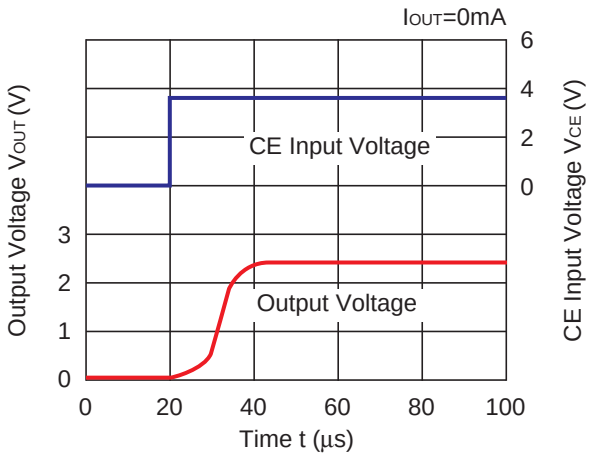

RP101x25xx

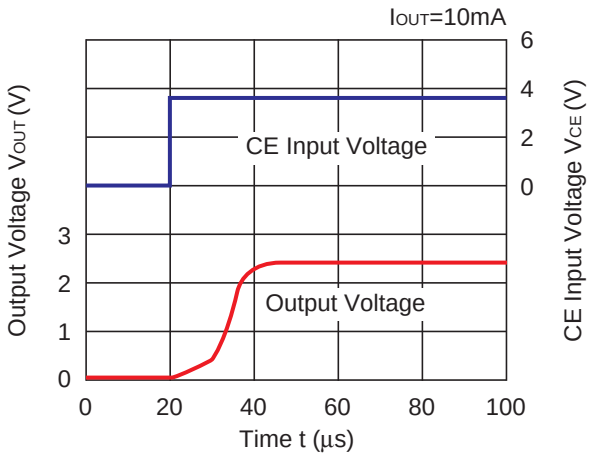

RP101x25xx

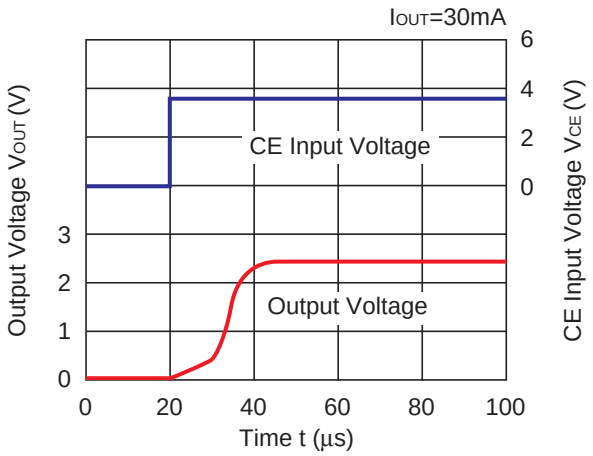

RP101x25xx

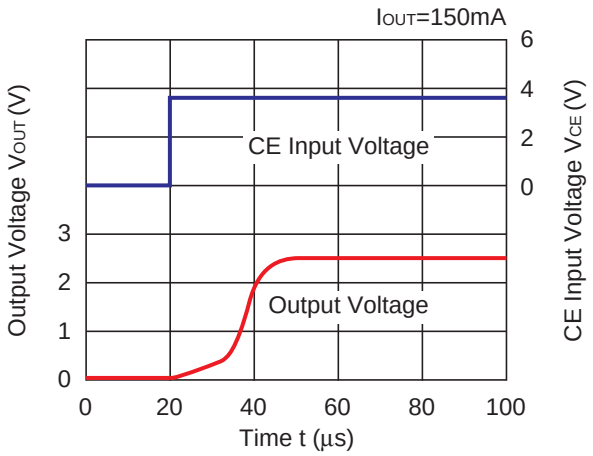

RP101x33xx

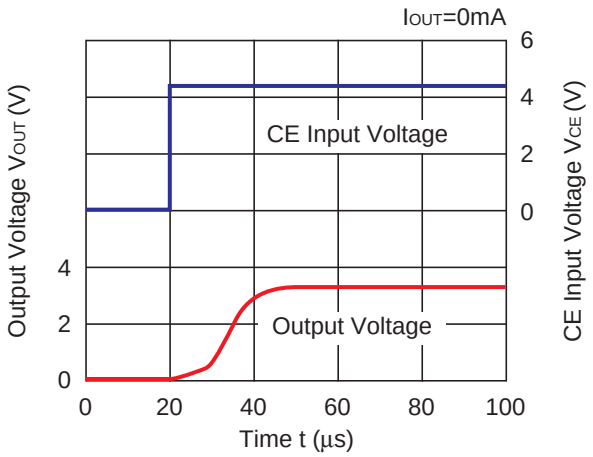

RP101x33xx

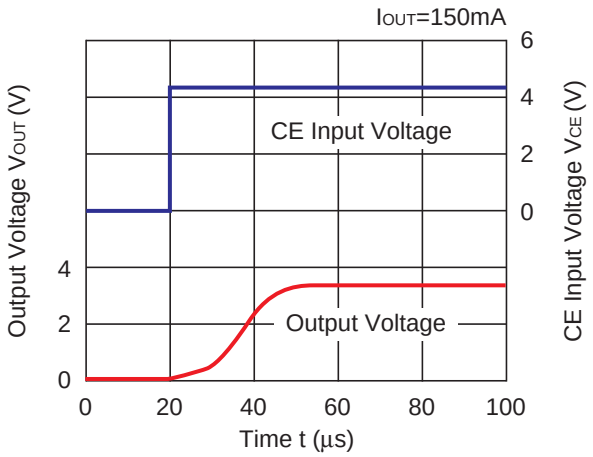

13) Turn Off Speed with CE pin (D Version) (C1=1.0µF, C2=1.0µF, Topt=25°C)

RP101x12xD

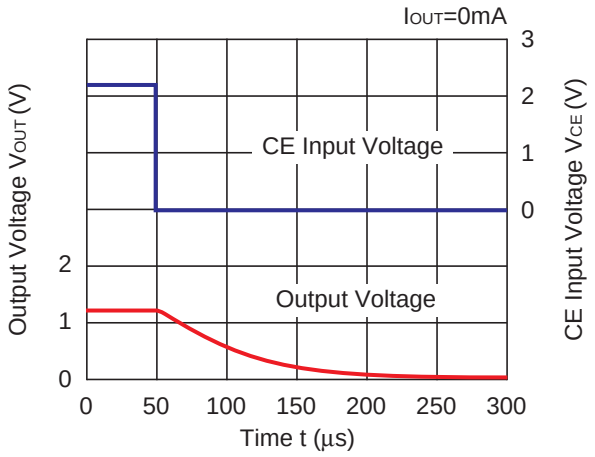

RP101x12xD

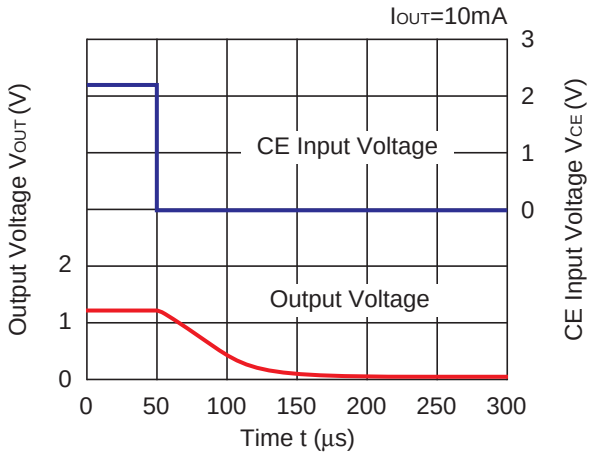

RP101x12xD

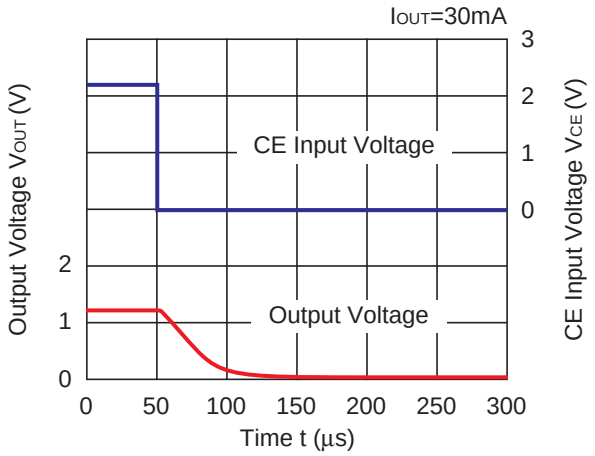

RP101x12xD

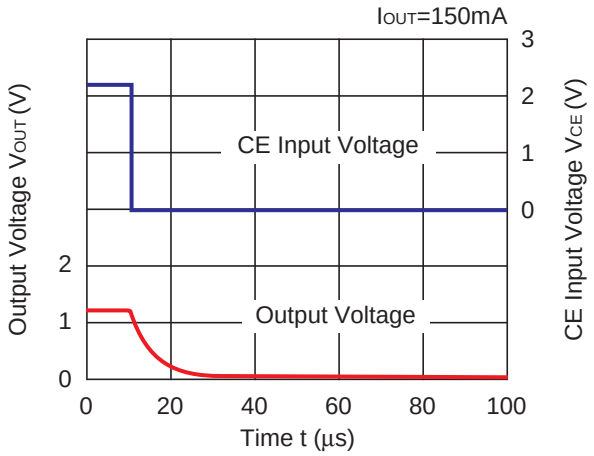

RP101x25xD

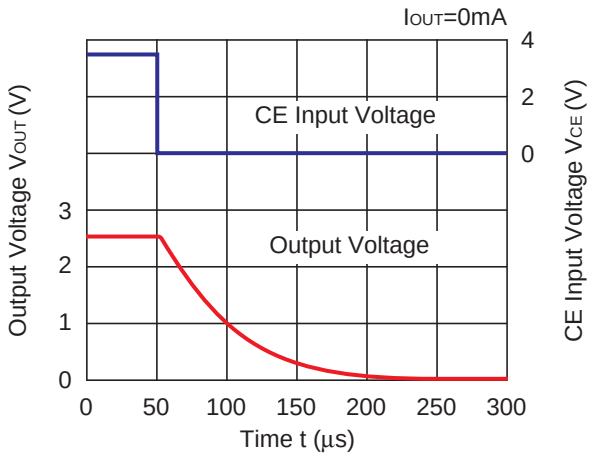

RP101x25xD

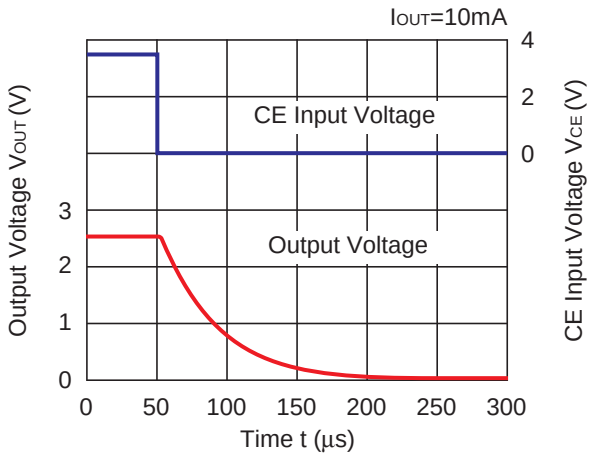

RP101x25xD

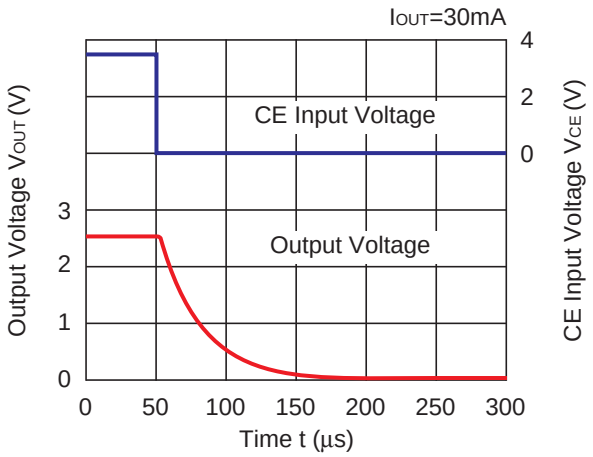

RP101x25xD

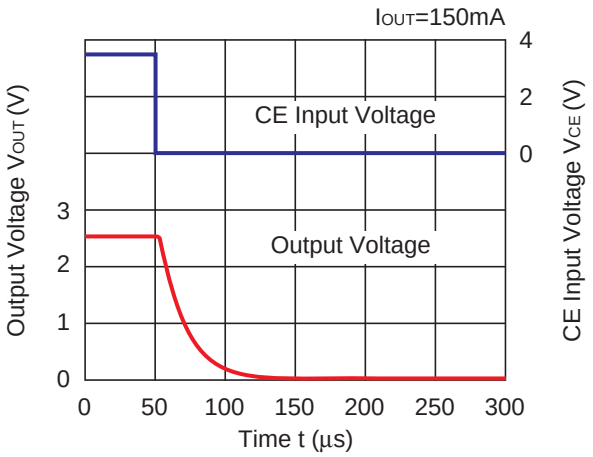

RP101x33xD

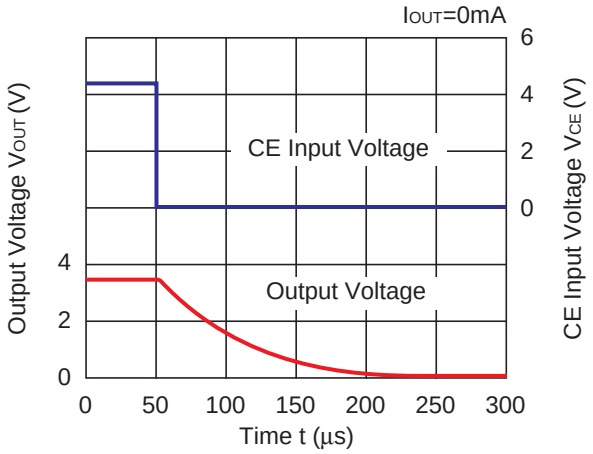

RP101x33xD

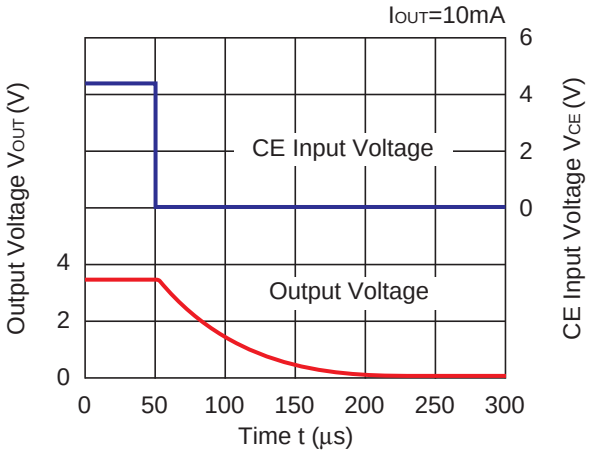

RP101x33xD

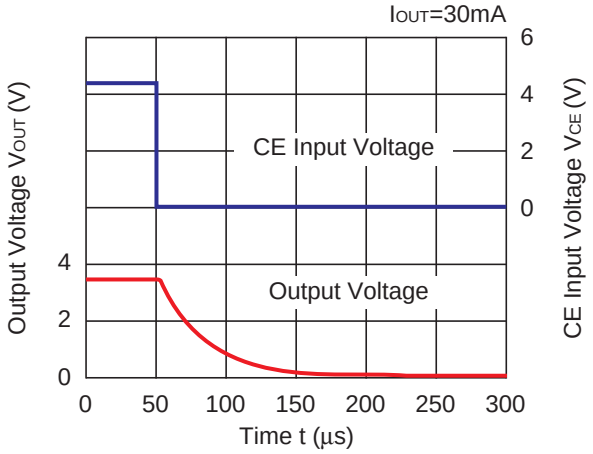

RP101x33xD

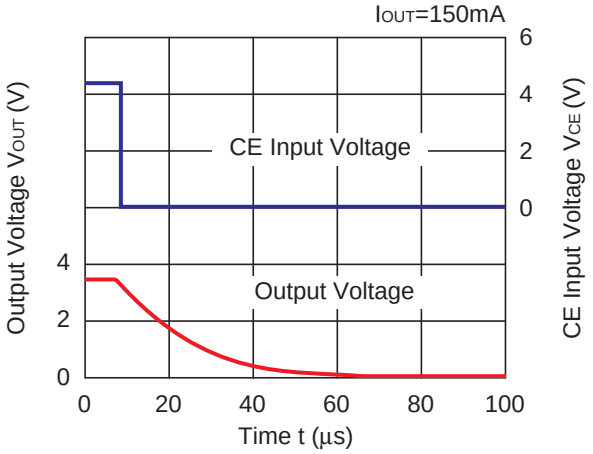

14) Dropout Voltage vs. Temperature (C1=1.0μF, C2=1.0μF)

RP101x12xx

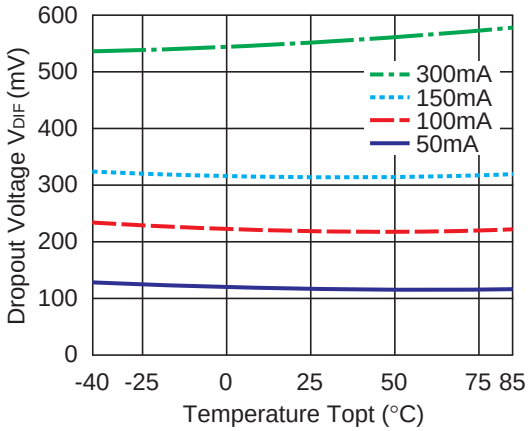

RP101x25xx

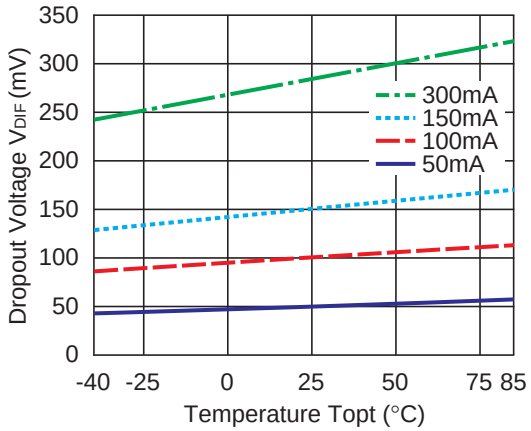

RP101x33xx

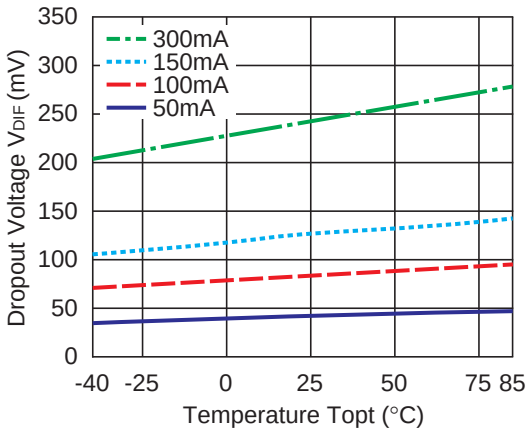

15) Output Voltage vs. Input Voltage (C1=1.0μF, C2=1.0μF)

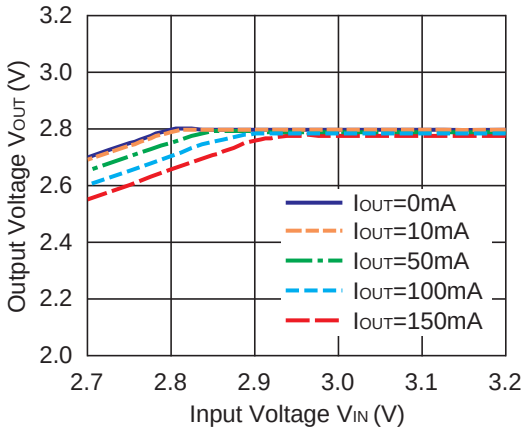

ESR vs. Output Current

When using these ICs, consider the following points:

The relations between I_{OUT} (Output Current) and ESR of an output capacitor are shown below.
The conditions when the white noise level is under 40μV (Avg.) are marked as the hatched area in the graph.

Measurement conditions

Frequency Band : 10Hz to 2MHz
Temperature : –40°C to 85°C

RP101x12xx

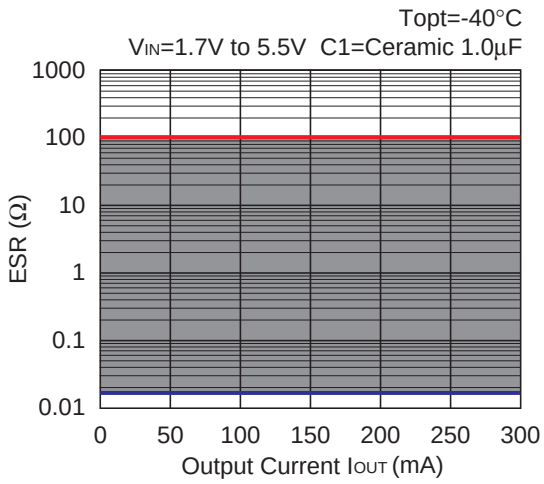

RP101x12xx

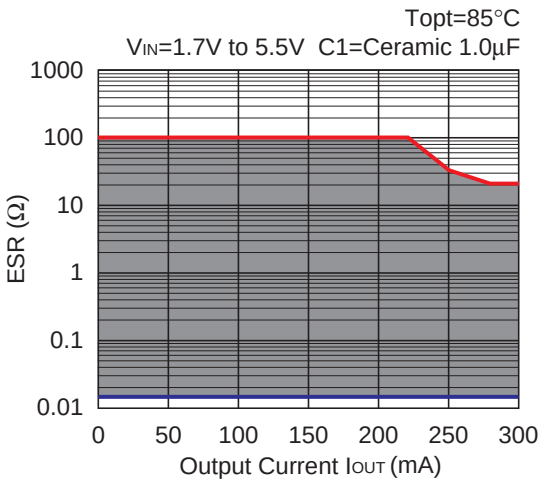

RP101x33xx

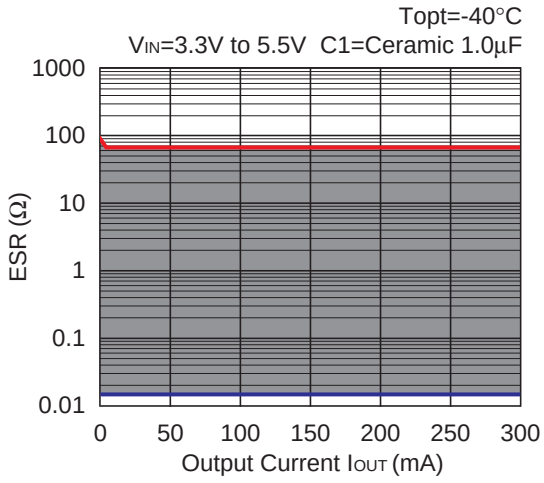

RP101x33xx

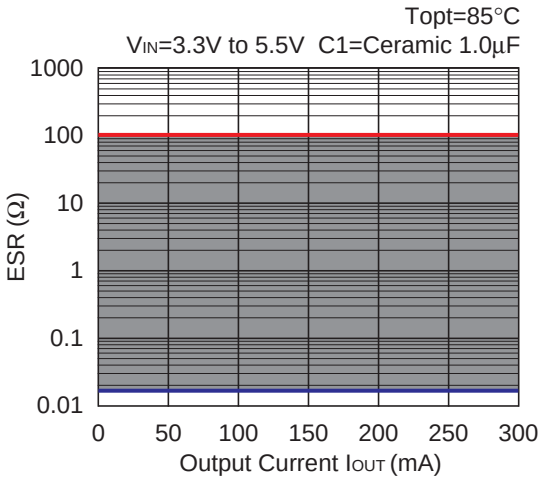

PACKAGE INFORMATION

Power Dissipation (DFN(PL)1612-4)

Power Dissipation (P_D) depends on conditions of mounting on board. This specification is based on the measurement at the condition below:

Measurement Conditions

	Standard Test Land Pattern
Environment	Mounting on Board (Wind velocity=0m/s)
Board Material	Glass cloth epoxy plastic (Double sided)
Board Dimensions	40mm*40mm*1.6mm
Copper Ratio	Top side: Approx. 50%, Back side: Approx. 50%
Through-holes	ϕ 0.54mm * 24pcs

Measurement Result (Ta=25°C)

	Standard Test Land Pattern
Power Dissipation	610mW (Tjmax=125°C) 762mW(Tjmax=150°C)
Thermal Resistance	θja = (125-25°C)/0.61W= 164°C/W
	θjc = 48°C/W

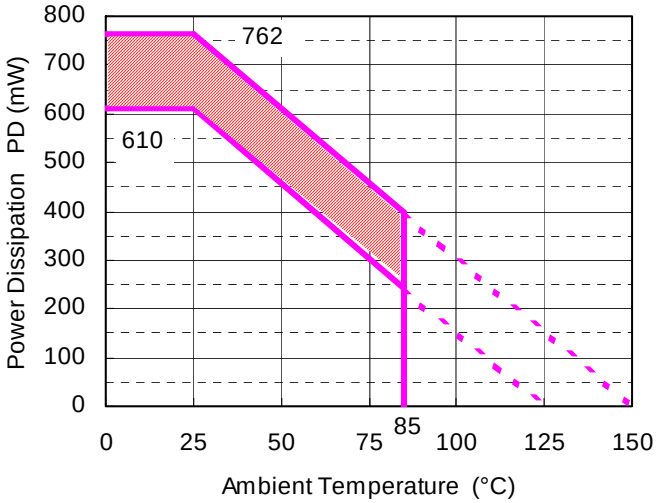

Power Dissipation

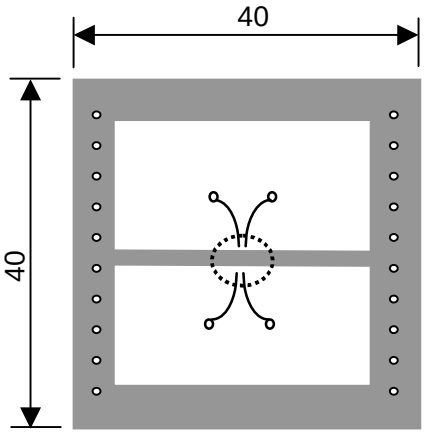

Measurent Board Pattern

IC Mount Area Unit : mm

*The above graph shows the Power Dissipation of the package based on Tjmax=125°C and Tjmax=150°C. Operating the IC in the shaded area in the graph might have an influence it's lifetime. Operating time must be within the time limit described in the table below, in case of operating in the shaded area.

Operating Time	Estimated years (Operating four hours/day)
13,000 hours	9years

Package Dimensions (DFN(PL)1612-4)

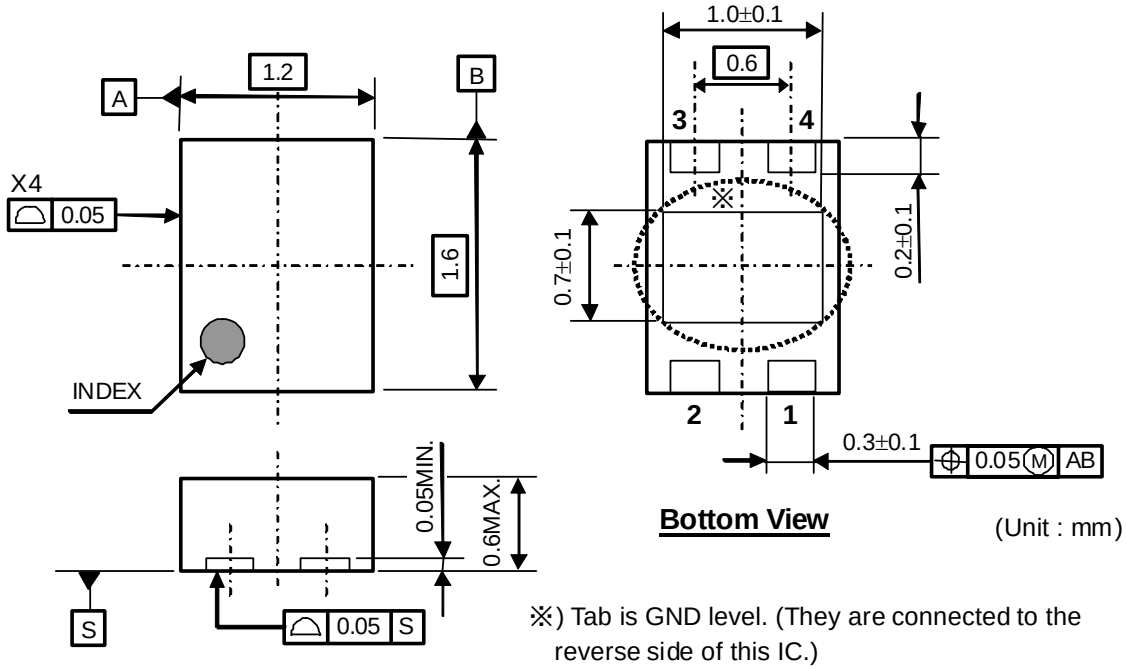

※) Tab is GND level. (They are connected to the reverse side of this IC.)
The tab is better to be connected to the GND, but leaving it open is also acceptable.

Mark Specification (DFN(PL)1612-4)

①② : Product Code … **Please refer to the RP101Kxx1x Series Mark Specification Table.**

③④ : Lot Number … Alphanumeric Serial Number

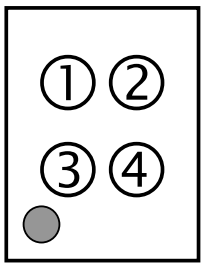

RP101Kxx1x Series Mark Specification Table

PKG: DFN(PL)1612-4

RP101Kxx1B

Part Number	①②	Vset
RP101K121B	**3A**	1.2V
RP101K131B	**3B**	1.3V
RP101K151B	**3C**	1.5V
RP101K181B	**3D**	1.8V
RP101K181B5	**3E**	1.85V
RP101K191B	**3F**	1.9V
RP101K201B	**3G**	2.0V
RP101K251B	**3H**	2.5V
RP101K261B	**3J**	2.6V
RP101K271B	**3K**	2.7V
RP101K281B	**3L**	2.8V
RP101K281B5	**3M**	2.85V
RP101K291B	**3N**	2.9V
RP101K301B	**3P**	3.0V
RP101K311B	**3Q**	3.1V
RP101K331B	**3R**	3.3V
RP101K211B	**3S**	2.1V
RP101K231B	**3T**	2.3V
RP101K241B	**3U**	2.4V
RP101K321B	**3V**	3.2V
RP101K221B	**3W**	2.2V

RP101Kxx1D

Part Number	①②	Vset
RP101K121D	**4A**	1.2V
RP101K131D	**4B**	1.3V
RP101K151D	**4C**	1.5V
RP101K181D	**4D**	1.8V
RP101K181D5	**4E**	1.85V
RP101K191D	**4F**	1.9V
RP101K201D	**4G**	2.0V
RP101K251D	**4H**	2.5V
RP101K261D	**4J**	2.6V
RP101K271D	**4K**	2.7V
RP101K281D	**4L**	2.8V
RP101K281D5	**4M**	2.85V
RP101K291D	**4N**	2.9V
RP101K301D	**4P**	3.0V
RP101K311D	**4Q**	3.1V
RP101K331D	**4R**	3.3V
RP101K211D	**4S**	2.1V
RP101K231D	**4T**	2.3V
RP101K241D	**4U**	2.4V
RP101K321D	**4V**	3.2V
RP101K221D	**4W**	2.2V

Power Dissipation (DFN(PL)1612-4B)

Power Dissipation (P_D) depends on conditions of mounting on board. This specification is based on the measurement at the condition below:

Measurement Conditions

	Standard Test Land Pattern
Environment	Mounting on Board (Wind velocity=0m/s)
Board Material	Glass cloth epoxy plastic (Double sided)
Board Dimensions	40mm*40mm*1.6mm
Copper Ratio	Top side: Approx. 50%, Back side: Approx. 50%
Through-holes	ϕ 0.54mm * 24pcs

Measurement Result (Ta=25°C)

	Standard Test Land Pattern
Power Dissipation	580mW (Tjmax=125°C) 725mW (Tjmax=150°C)
Thermal Resistance	θja = (125-25 °C) / 0.58W= 172 °C/W
	θjc = 51 °C/W

Power Dissipation

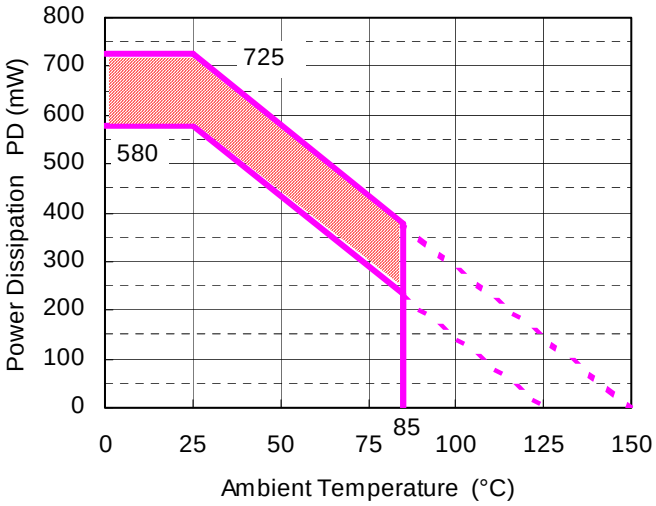

Measurent Board Pattern

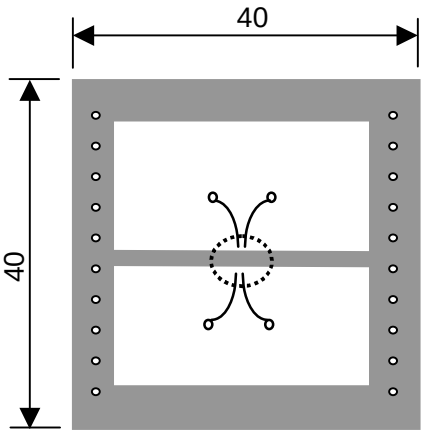

IC Mount Area Unit : mm

*The above graph shows the Power Dissipation of the package based on Tjmax=125°C and Tjmax=150°C. Operating the IC in the shaded area in the graph might have an influence it's lifetime. Operating time must be within the time limit described in the table below, in case of operating in the shaded area.

Operating Time	Estimated years (Operating four hours/day)
13,000 hours	9years

Package Dimensions (DFN(PL)1612-4B)

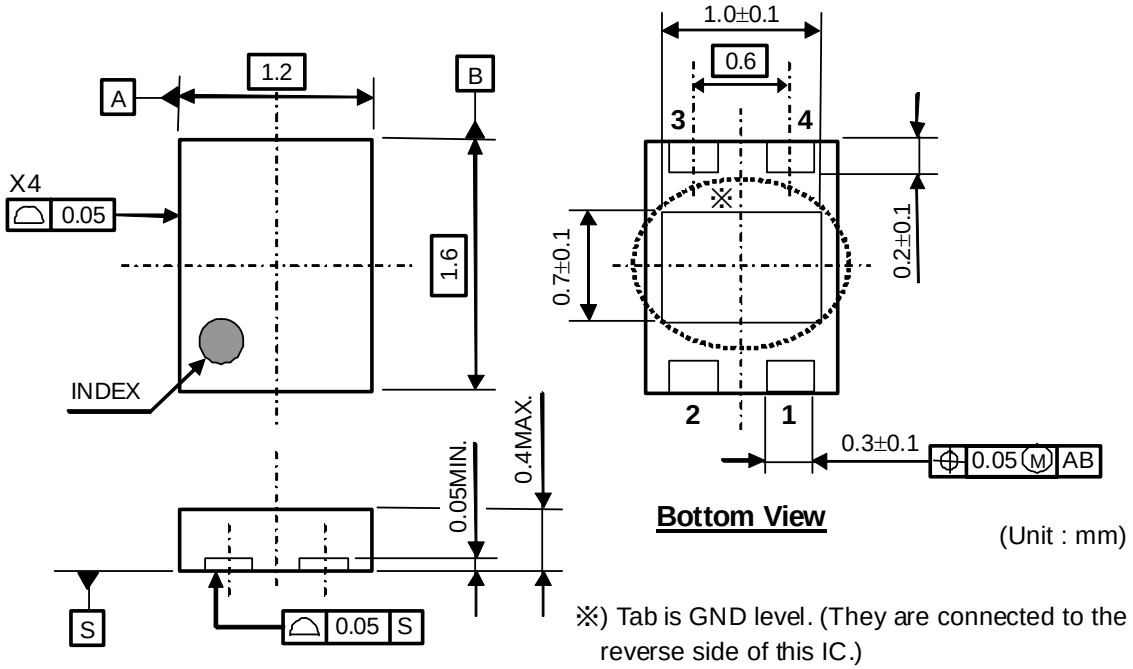

(Unit : mm)

※) Tab is GND level. (They are connected to the reverse side of this IC.)
The tab is better to be connected to the GND, but leaving it open is also acceptable.

Mark Specification (DFN(PL)1612-4B)

①② : Product Code … **Please refer to the RP101Kxx2x Series Mark Specification Table.**

③④ : Lot Number … Alphanumeric Serial Number

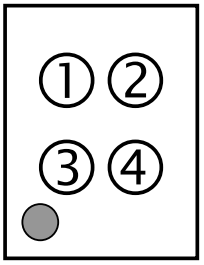

RP101Kxx2x Series Mark Specification Table

PKG: DFN(PL)1612-4B

RP101Kxx2B

Part Number	①②	Vset
RP101K122B	**5A**	1.2V
RP101K132B	**5B**	1.3V
RP101K152B	**5C**	1.5V
RP101K182B	**5D**	1.8V
RP101K182B5	**5E**	1.85V
RP101K192B	**5F**	1.9V
RP101K202B	**5G**	2.0V
RP101K252B	**5H**	2.5V
RP101K262B	**5J**	2.6V
RP101K272B	**5K**	2.7V
RP101K282B	**5L**	2.8V
RP101K282B5	**5M**	2.85V
RP101K292B	**5N**	2.9V
RP101K302B	**5P**	3.0V
RP101K312B	**5Q**	3.1V
RP101K332B	**5R**	3.3V
RP101K212B	**5S**	2.1V
RP101K232B	**5T**	2.3V
RP101K242B	**5U**	2.4V
RP101K322B	**5V**	3.2V
RP101K222B	**5W**	2.2V

RP101Kxx2D

Part Number	①②	Vset
RP101K122D	**6A**	1.2V
RP101K132D	**6B**	1.3V
RP101K152D	**6C**	1.5V
RP101K182D	**6D**	1.8V
RP101K182D5	**6E**	1.85V
RP101K1921D	**6F**	1.9V
RP101K202D	**6G**	2.0V
RP101K252D	**6H**	2.5V
RP101K262D	**6J**	2.6V
RP101K272D	**6K**	2.7V
RP101K282D	**6L**	2.8V
RP101K282D5	**6M**	2.85V
RP101K292D	**6N**	2.9V
RP101K302D	**6P**	3.0V
RP101K312D	**6Q**	3.1V
RP101K332D	**6R**	3.3V
RP101K212D	**6S**	2.1V
RP101K232D	**6T**	2.3V
RP101K242D	**6U**	2.4V
RP101K322D	**6V**	3.2V
RP101K222D	**6W**	2.2V

Power Dissipation (SOT-23-5)

Power Dissipation (P_D) depends on conditions of mounting on board. This specification is based on the measurement at the condition below:
(Power Dissipation (SOT-23-5) is substitution of SOT-23-6.)

Measurement Conditions

	Standard Test Land Pattern
Environment	Mounting on Board (Wind velocity=0m/s)
Board Material	Glass cloth epoxy plastic (Double sided)
Board Dimensions	40mm*40mm*1.6mm
Copper Ratio	Top side: Approx. 50%, Back side: Approx. 50%
Through-holes	ϕ 0.5mm * 44pcs

Measurement Result (Ta=25°C)

	Standard Test Land Pattern	**Free Air**
Power Dissipation	420mW(Tjmax=125°C) 525mW(Tjmax=150°C)	250mW(Tjmax=125°C)
Thermal Resistance	θja = (125-25°C)/0.42W= 238°C/W	400°C/W

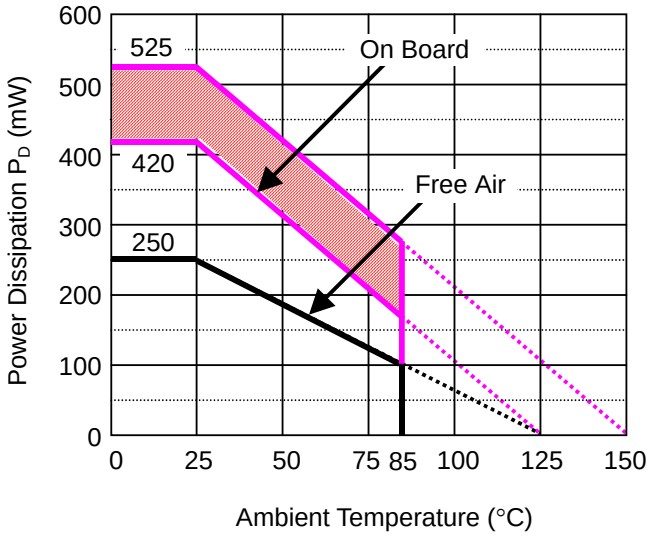

Power Dissipation

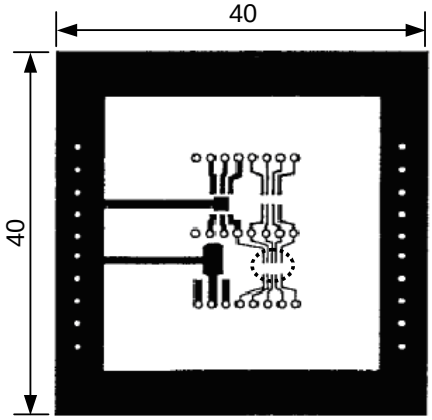

Measurement Board Pattern

IC Mount Area (Unit: mm)

*The above graph shows the Power Dissipation of the package based on Tjmax=125°C and Tjmax=150°C. Operating the IC in the shaded area in the graph might have an influence it's lifetime. Operating time must be within the time limit described in the table below, in case of operating in the shaded area.

Operating Time	Estimated years (Operating four hours/day)
9,000 hours	6years

Package Dimensions (SOT-23-5)

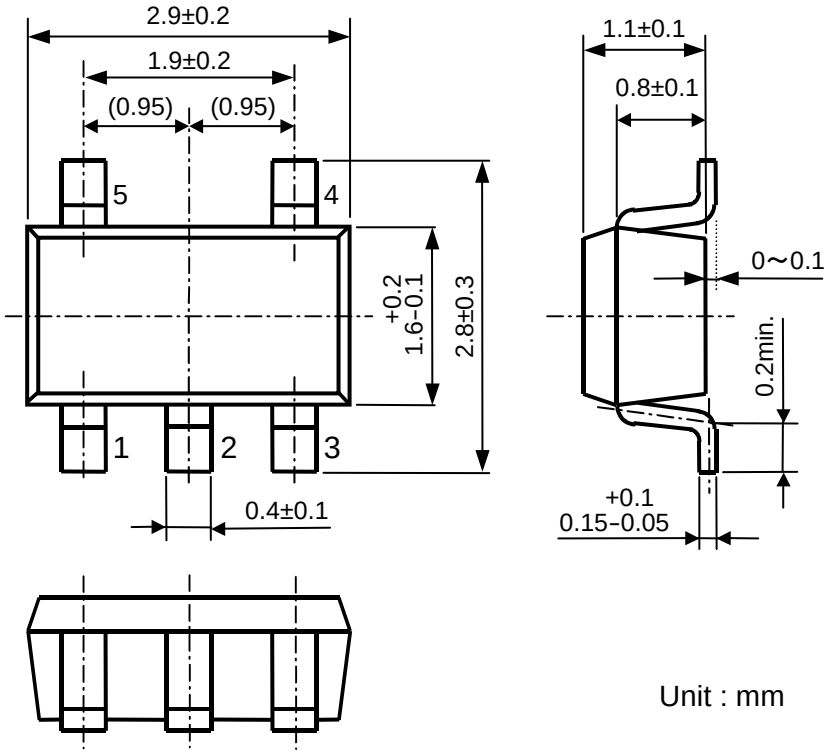

Unit : mm

Mark Specification (SOT-23-5)

①②③ : Product Code … **Please refer to the RP101N Series Mark Specification Table.**

④⑤ : Lot Number … Alphanumeric Serial Number

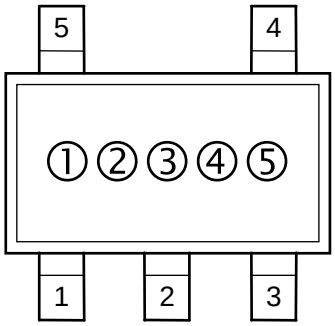

RP101N Series Mark Specification Table

PKG: SOT-23-5

RP101NxxxB

Part Number	①②③	Vset
RP101N121B	**70A**	1.2V
RP101N131B	**70B**	1.3V
RP101N151B	**70C**	1.5V
RP101N181B	**70D**	1.8V
RP101N181B5	**70E**	1.85V
RP101N191B	**70F**	1.9V
RP101N201B	**70G**	2.0V
RP101N251B	**70H**	2.5V
RP101N261B	**70J**	2.6V
RP101N271B	**70K**	2.7V
RP101N281B	**70L**	2.8V
RP101N281B5	**70M**	2.85V
RP101N291B	**70N**	2.9V
RP101N301B	**70P**	3.0V
RP101N311B	**70Q**	3.1V
RP101N331B	**70R**	3.3V
RP101N211B	**70S**	2.1V
RP101N231B	**70T**	2.3V
RP101N241B	**70U**	2.4V
RP101N321B	**70V**	3.2V
RP101N221B	**70W**	2.2V

RP101NxxxD

Part Number	①②③	Vset
RP101N121D	**71A**	1.2V
RP101N131D	**71B**	1.3V
RP101N151D	**71C**	1.5V
RP101N181D	**71D**	1.8V
RP101N181D5	**71E**	1.85V
RP101N191D	**71F**	1.9V
RP101N201D	**71G**	2.0V
RP101N251D	**71H**	2.5V
RP101N261D	**71J**	2.6V
RP101N271D	**71K**	2.7V
RP101N281D	**71L**	2.8V
RP101N281D5	**71M**	2.85V
RP101N291D	**71N**	2.9V
RP101N301D	**71P**	3.0V
RP101N311D	**71Q**	3.1V
RP101N331D	**71R**	3.3V
RP101N211D	**71S**	2.1V
RP101N231D	**71T**	2.3V
RP101N241D	**71U**	2.4V
RP101N321D	**71V**	3.2V
RP101N221D	**71W**	2.2V

1. The products and the product specifications described in this document are subject to change or discontinuation of production without notice for reasons such as improvement. Therefore, before deciding to use the products, please refer to our sales representatives for the latest information thereon.
2. The materials in this document may not be copied or otherwise reproduced in whole or in part without prior written consent of our company.
3. Please be sure to take any necessary formalities under relevant laws or regulations before exporting or otherwise taking out of your country the products or the technical information described herein.
4. The technical information described in this document shows typical characteristics of and example application circuits for the products. The release of such information is not to be construed as a warranty of or a grant of license under our company's or any third party's intellectual property rights or any other rights.
5. The products listed in this document are intended and designed for use as general electronic components in standard applications (office equipment, telecommunication equipment, measuring instruments, consumer electronic products, amusement equipment etc.). Those customers intending to use a product in an application requiring extreme quality and reliability, for example, in a highly specific application where the failure or misoperation of the product could result in human injury or death (aircraft, spacevehicle, nuclear reactor control system, traffic control system, automotive and transportation equipment, combustion equipment, safety devices, life support system etc.) should first contact us.
6. We are making our continuous effort to improve the quality and reliability of our products, but semiconductor products are likely to fail with certain probability. In order to prevent any injury to persons or damages to property resulting from such failure, customers should be careful enough to incorporate safety measures in their design, such as redundancy feature, fire containment feature and fail-safe feature. We do not assume any liability or responsibility for any loss or damage arising from misuse or inappropriate use of the products.
7. Anti-radiation design is not implemented in the products described in this document.
8. The X-ray exposure can influence functions and characteristics of the products. Confirm the product functions and characteristics in the evaluation stage.
9. WLCSP products should be used in light shielded environments. The light exposure can influence functions and characteristics of the products under operation or storage.
10. There can be variation in the marking when different AOI (Automated Optical Inspection) equipment is used. In the case of recognizing the marking characteristic with AOI, please contact our sales or our distributor before attempting to use AOI.
11. Please contact our sales representatives should you have any questions or comments concerning the products or the technical information.

NISSHINBO

Nisshinbo Micro Devices Inc.

Official website
https://www.nisshinbo-microdevices.co.jp/en/
Purchase information
https://www.nisshinbo-microdevices.co.jp/en/buy/

ENTEGRECİ

Bu belge www.entegreci.com üzerinden sunulmaktadır.

Elektronik komponent tedarikinde Entegreci

Entegreci, Eskişehir merkezli, Türkiye geneline satış yapan bir elektronik komponent mağazasıdır. Entegreler (IC), mikrodenetleyiciler, transistörler, diyotlar, pasif elemanlar, konnektörler, modüller ve geliştirme kartları tek adetten seri üretim adetlerine kadar satılır. Ürün sayfalarında güncel stok durumunu, fiyatı ve datasheet bağlantısını bulabilirsiniz.

Parça koduyla arama

Üretici parça numarasını yazın; stok ve fiyatı hemen görün.

www.entegreci.com

Ürün kategorileri

Entegreden kapasitöre tüm elektronik komponent kategorileri.

Kategorilere göz atın

Üreticiler

Aradığınız üreticinin ürünlerini tek sayfada inceleyin.

Üreticileri görün

Toplu alım ve teklif

Listede olmayan ya da yüksek adetli parçalar için teklif isteyin.

Teklif isteyin

www.entegreci.com | **destek@entegreci.com** | **0850 305 90 34**

Entegreci is an online electronic components store based in Türkiye. Search by manufacturer part number to see stock, prices and datasheets for integrated circuits, microcontrollers, transistors, passive components and connectors, or request a quote for parts that are not listed.

Bu sayfa Entegreci tarafından eklenmiştir. Belgenin önceki sayfaları asıl yayıncısına aittir ve içeriği değiştirilmemiştir; en güncel sürüm için belgenin yayıncısına başvurun.