LOW NOISE 300mA LDO REGULATOR

NO.EA-141-251006

OUTLINE

The RP102x Series are CMOS-based voltage regulator ICs with high output voltage accuracy, extremely low supply current, low ON-resistance, and high ripple rejection. Each of these ICs consists of a voltage reference unit, an error amplifier, a resistor-net for voltage setting, a current limit circuit and a chip enable circuit.

These ICs perform with low dropout voltage and "chip enable" function. The line transient response and load transient response of the RP102x Series are excellent, thus these ICs are very suitable for the power supply for hand-held communication equipment.

The output voltage of these ICs is fixed with high accuracy. Since the packages for these ICs are SOT-23-5, DFN(PL)1820-6, and WLCSP-4-P2, therefore high density mounting of the ICs on boards is possible.

FEATURES

- Supply Current ..... Typ. 50µA
- Standby Mode ..... Typ. 0.1µA
- Dropout Voltage ..... Typ. 0.12V (I_{OUT}=300mA, V_{OUT}=2.8V)
- Ripple Rejection ..... Typ. 80dB (f=1kHz)
- Temperature-Drift Coefficient of Output Voltage ... Typ. ±20ppm/°C
- Line Regulation ..... Typ. 0.02%/V
- Output Voltage Accuracy ..... ±0.8%
- Packages ..... WLCSP-4-P2, DFN(PL)1820-6, SOT-23-5
- Input Voltage Range ..... 1.7V to 5.25V
- Output Voltage Range ..... 1.2V to 3.3V (0.1V steps)
  (For other voltages, please refer to MARK INFORMATIONS.)
- Built-in Fold Back Protection Circuit ..... Typ. 50mA (Current at short mode)
- Ceramic capacitors are recommended to be used with this IC ..... C_{IN}=C_{OUT}=1µF or more

APPLICATIONS

- Power source for portable communication equipment.
- Power source for electrical appliances such as cameras, VCRs and camcorders.
- Power source for battery-powered equipment.

BLOCK DIAGRAMS

RP102xxx1B

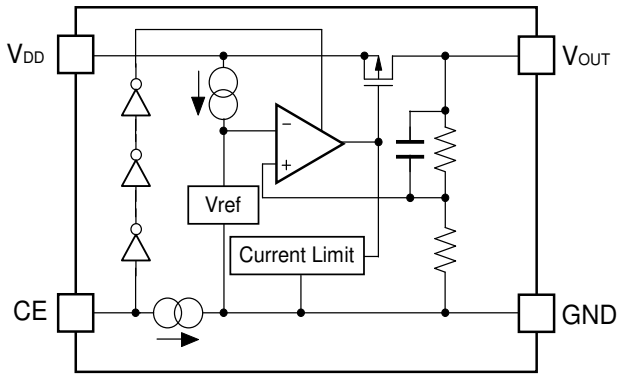

RP102xxx1D

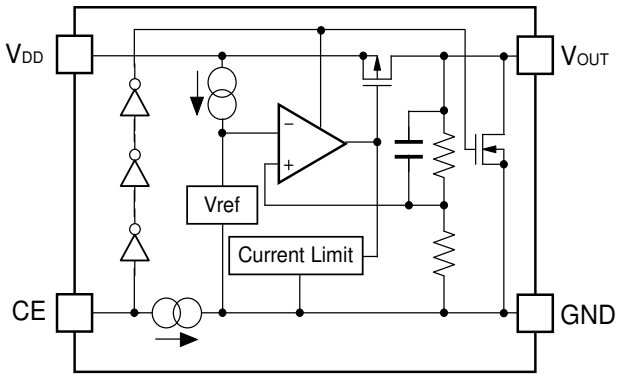

SELECTION GUIDE

The output voltage, auto discharge function, package, and the taping type, etc. for the ICs can be selected at the user's request.

Product Name	Package	Quantity per Reel	Pb Free	Halogen Free
RP102Zxx1∗-TR-F	WLCSP-4-P2	5,000 pcs	Yes	Yes
RP102Kxx1∗-TR	DFN(PL)1820-6	5,000 pcs	Yes	Yes
RP102Nxx1∗-TR-FE	SOT-23-5	3,000 pcs	Yes	Yes

xx: The output voltage can be designated in the range from 1.2V(12) to 3.3V(33) in 0.1V steps.
(For other voltages, please refer to MARK INFORMATIONS.)

∗ : CE pin polarity and auto discharge function at off state are options as follows.
(B) "H" active, without auto discharge function at off state
(D) "H" active, with auto discharge function at off state

PIN CONFIGURATIONS

- **WLCSP-4-P2**

Mark Side

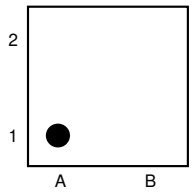

Bump Side

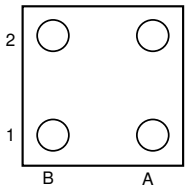

- **DFN(PL)1820-6**

Top View

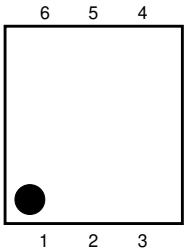

Bottom View

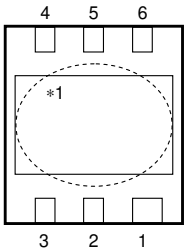

- **SOT-23-5**

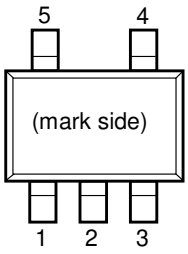

PIN DESCRIPTION

- **WLCSP-4-P2**

Pin No	Symbol	Pin Description
A1	V_{DD}	Input Pin
A2	V_{OUT}	Output Pin
B1	CE	Chip Enable Pin ("H" Active)
B2	GND	Ground Pin

- **DFN(PL)1820-6**

Pin No	Symbol	Pin Description
1	V_{OUT}	Output Pin*2
2	V_{OUT}	Output Pin*2
3	GND	Ground Pin
4	CE	Chip Enable Pin ("H" Active)
5	V_{DD}	Input Pin*2
6	V_{DD}	Input Pin*2

∗1) Tab is GND level. (They are connected to the reverse side of this IC.)
The tab is better to be connected to the GND, but leaving it open is also acceptable.
∗2) No.1 pin and No.2 pin, No.5 pin and No.6 pin of DFN(PL)1820-6 package must be wired when it is mounted on board.

- **SOT-23-5**

Pin No	Symbol	Pin Description
1	V_{DD}	Input Pin
2	GND	Ground Pin
3	CE	Chip Enable Pin ("H" Active)
4	NC	No Connection
5	V_{OUT}	Output Pin

ABSOLUTE MAXIMUM RATINGS

Symbol	Item	Rating	Unit
V_{IN}	Input Voltage	6.0	V
V_{CE}	Input Voltage (CE Pin)	6.0	V
V_{OUT}	Output Voltage	−0.3 to V_{IN}+0.3	V
I_{OUT}	Output Current	400	mA
P_D	Power Dissipation (WLCSP-4-P2) *	530	mW
	Power Dissipation (SOT-23-5) *	420	
	Power Dissipation (DFN(PL)1820-6) *	880	
Topt	Operating Temperature Range	−40 to 85	°C
Tstg	Storage Temperature Range	−55 to 125	°C

∗) For Power Dissipation, please refer to PACKAGE INFORMATION.

ABSOLUTE MAXIMUM RATINGS

Electronic and mechanical stress momentarily exceeded absolute maximum ratings may cause the permanent damages and may degrade the life time and safety for both device and system using the device in the field.
The functional operation at or over these absolute maximum ratings is not assured.

RECOMMENDED OPERATING CONDITIONS (ELECTRICAL CHARACTERISTICS)

All of electronic equipment should be designed that the mounted semiconductor devices operate within the recommended operating conditions. The semiconductor devices cannot operate normally over the recommended operating conditions, even if when they are used over such conditions by momentary electronic noise or surge.
And the semiconductor devices may receive serious damage when they continue to operate over the recommended operating conditions.

ELECTRICAL CHARACTERISTICS

- **RP102xxx1B/D**

V_{IN}=Set V_{OUT}+1V for V_{OUT} options grater than 1.5V. V_{IN}=2.5V for $V_{OUT} \leqq$ 1.5V.
I_{OUT}=1mA, C_{IN}=C_{OUT}=1μF, unless otherwise noted.

Topt=25°C

Symbol	Item	Conditions		Min.	Typ.	Max.	Unit
V_{OUT}	Output Voltage	V_{IN}=Set V_{OUT}+1V	V_{OUT} > 2.0V	×0.992		×1.008	V
			$V_{OUT} \leqq$ 2.0V	−16		+16	mV
I_{OUT}	Output Current			300			mA
$\Delta V_{OUT}/\Delta I_{OUT}$	Load Regulation	1mA ≦ I_{OUT} ≦ 150mA			10	20	mV
		1mA ≦ I_{OUT} ≦ 300mA			20	40	
V_{DIF}	Dropout Voltage	Refer to the following table					
I_{SS}	Supply Current	I_{OUT}=0mA			50	70	μA
Istandby	Supply Current (Standby)	V_{CE}=0V			0.1	2.0	μA
$\Delta V_{OUT}/\Delta V_{IN}$	Line Regulation	Set V_{OUT}+0.5V ≦ V_{IN} ≦ 5V			0.02	0.10	%/V
RR	Ripple Rejection	f=1kHz, Ripple 0.2Vp-p V_{IN}=Set V_{OUT}+1V, I_{OUT}=30mA (In case that $V_{OUT} \leqq$ 2V, V_{IN}=3V)			80		dB
V_{IN}	Input Voltage*			1.7		5.25	V
$\Delta V_{OUT}/\Delta Topt$	Output Voltage Temperature Coefficient	−40°C ≦ Topt ≦ 85°C			±20		ppm /°C
I_{SC}	Short Current Limit	V_{OUT}=0V			50		mA
I_{PD}	CE Pull-down Current			0.05	0.3	0.6	μA
V_{CEH}	CE Input Voltage “H”			1.1			V
V_{CEL}	CE Input Voltage “L”					0.3	V
en	Output Noise	BW=10Hz to 100kHz, I_{OUT}=30mA			30		μVrms
R_{LOW}	Low Output Nch Tr. ON Resistance (of D version)	V_{IN}=4V V_{CE}=0V			30		Ω

*) The maximum Input Voltage of the ELECTRICAL CHARACTERISTICS is 5.25V. In case of exceeding this specification, the IC must be operated on condition that the Input Voltage is up to 5.5V and the total operating time is within 500hrs.

- **Electrical Characteristics by Output Voltage**

Topt=25°C

Output Voltage V_{OUT} (V)	Dropout Voltage V_{DIF} (V)					
	Condition	Typ.	Max.	Condition	Typ.	Max.
1.2V ≦ V_{OUT} < 1.5V	I_{OUT}=150mA	0.145	-	I_{OUT}=300mA	0.290	0.500
1.5V ≦ V_{OUT} < 1.7V		0.110	0.160		0.220	0.320
1.7V ≦ V_{OUT} < 2.0V		0.100	0.140		0.200	0.280
2.0V ≦ V_{OUT} < 2.5V		0.085	0.120		0.170	0.240
2.5V ≦ V_{OUT} < 2.8V		0.070	0.100		0.140	0.200
2.8V ≦ V_{OUT} ≦ 3.3V		0.060	0.095		0.120	0.190

TYPICAL APPLICATION

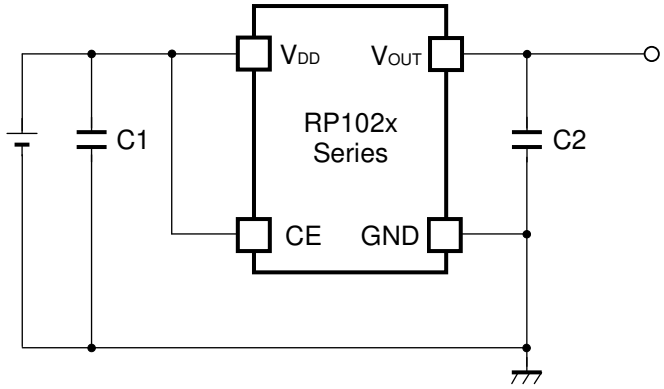

(External Components)
C2 1.0µF MURATA: GRM155B31A105KE15

TECHNICAL NOTES

When using these ICs, consider the following points:

Phase Compensation

In these ICs, phase compensation is made for securing stable operation even if the load current is varied. For this purpose, use a capacitor C2 with good frequency characteristics and ESR (Equivalent Series Resistance). (Note: If additional ceramic capacitors are connected with parallel to the output pin with an output capacitor for phase compensation, the operation might be unstable. Because of this, test these ICs with as same external components as ones to be used on the PCB.)

PCB Layout

Make V_{DD} and GND lines sufficient. If their impedance is high, noise pickup or unstable operation may result. Connect a capacitor C1 with a capacitance value as much as 1.0µF or more between V_{DD} and GND pin, and as close as possible to the pins.

Set external components, especially the output capacitor C2, as close as possible to the ICs, and make wiring as short as possible.

TEST CIRCUITS

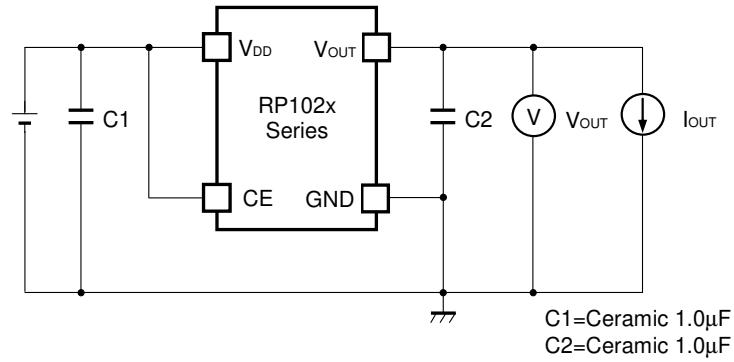

Basic Test Circuit

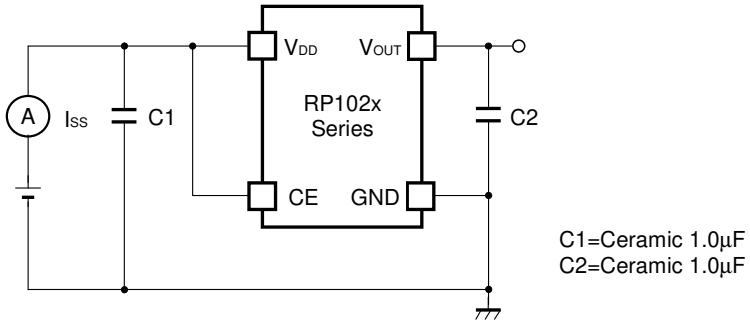

Test Circuit for Supply Current

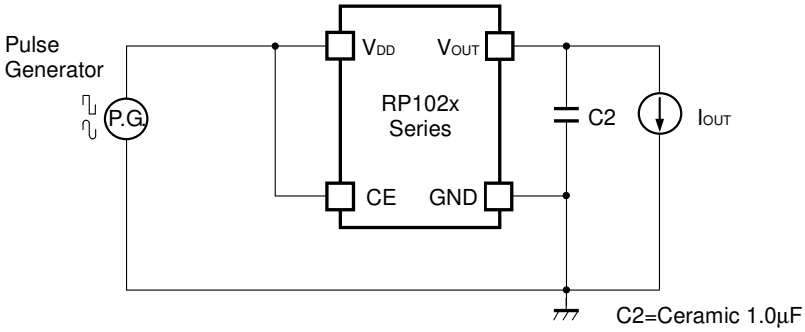

Test Circuit for Ripple Rejection

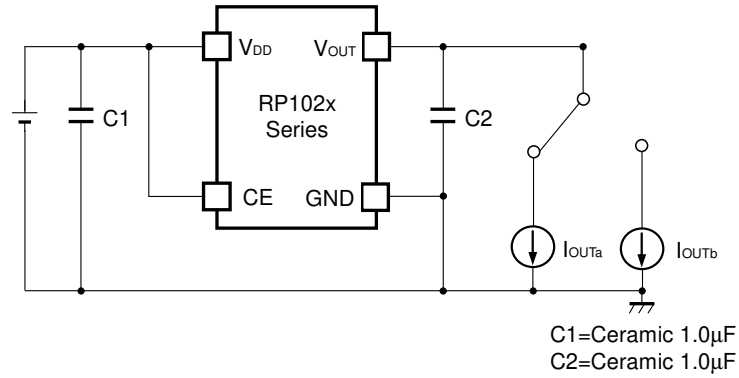

Test Circuit for Load Transient Response

TYPICAL CHARACTERISTIC

1) Output Voltage vs. Output Current (C_{IN}=1.0µF, C_{OUT}=1.0µF, Topt=25°C)

RP102x121x

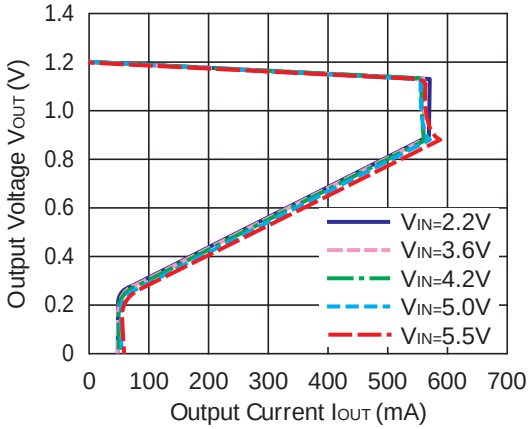

RP102x251x

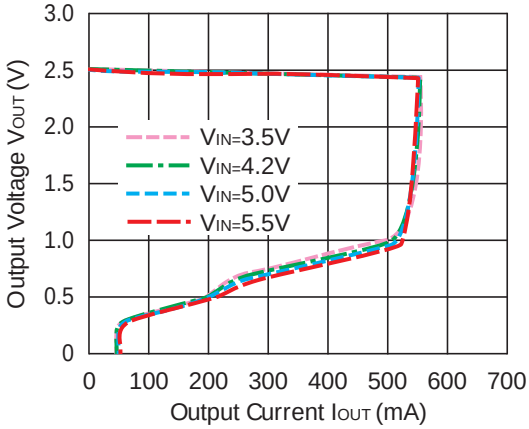

RP102x331x

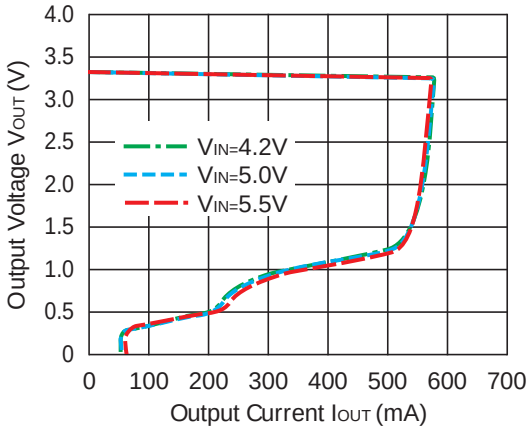

2) Output Voltage vs. Input Voltage (C_{IN}=1.0µF, C_{OUT}=1.0µF, Topt=25°C)

RP102x121x

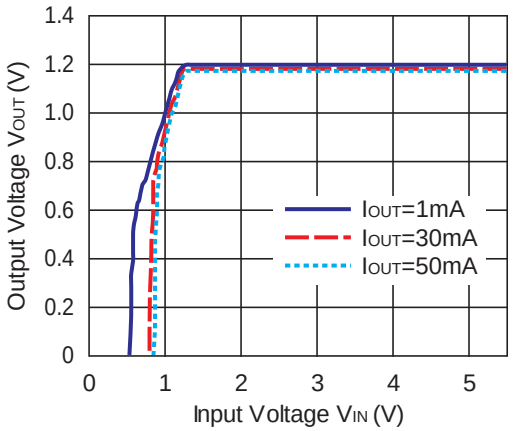

RP102x251x

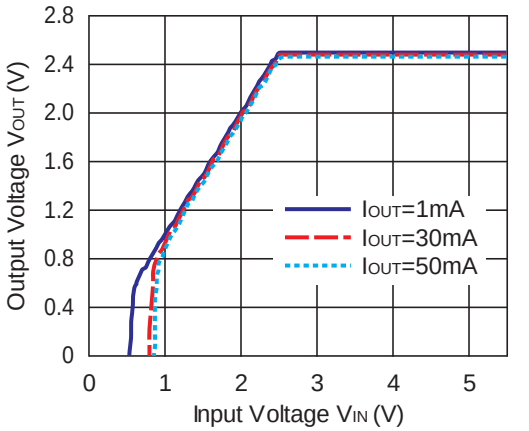

RP102x331x

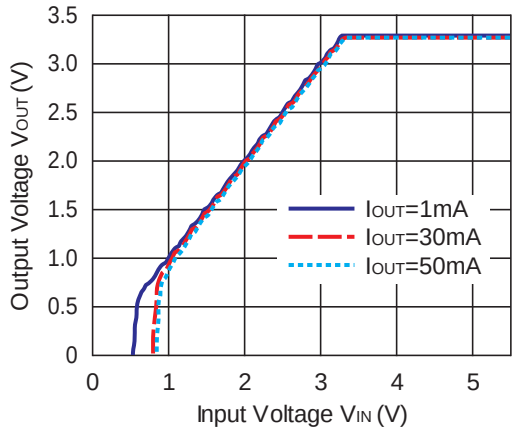

3) Supply Current vs. Input Voltage (C_{IN}=1.0µF, C_{OUT}=1.0µF, Topt=25°C)

RP102x121x

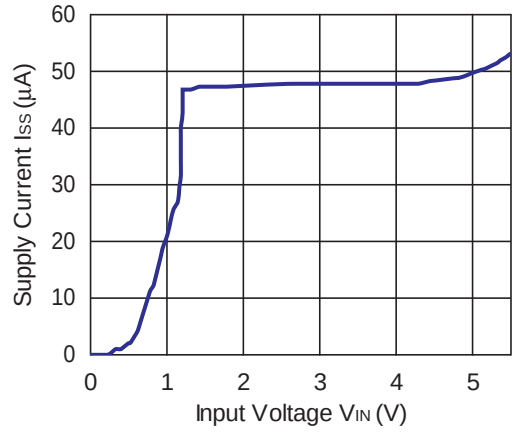

RP102x251x

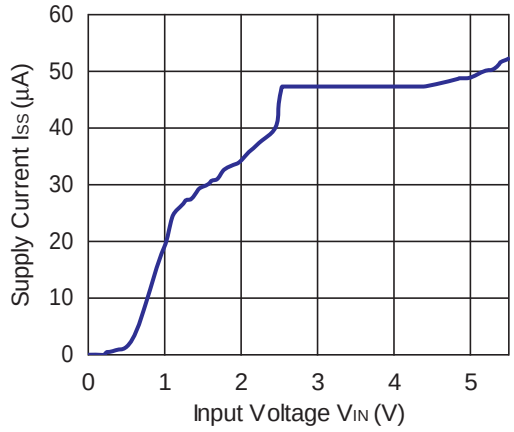

RP102x331x

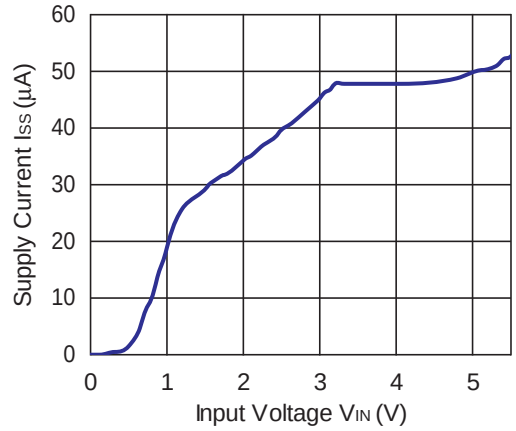

4) Output Voltage vs. Temperature (C_{IN}=1.0µF, C_{OUT}=1.0µF, I_{OUT}=1mA)

RP102x121x

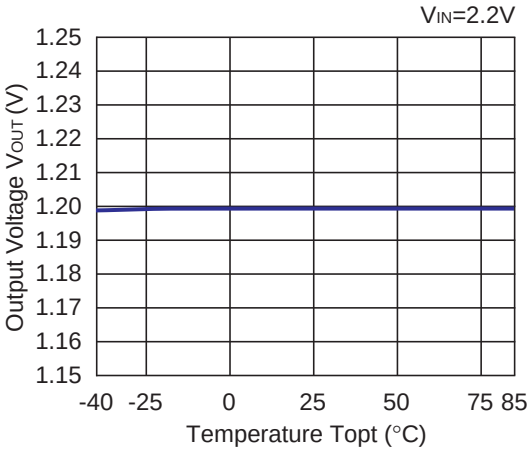

RP102x251x

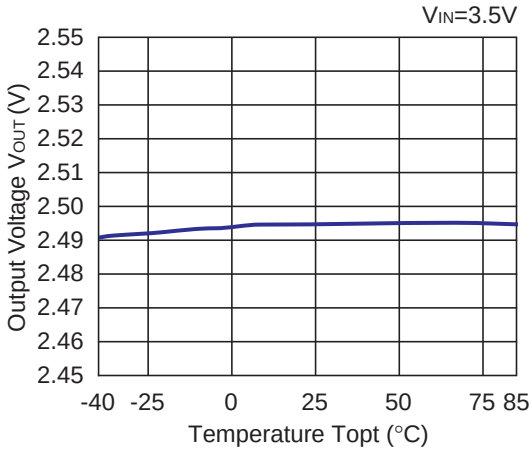

RP102x331x

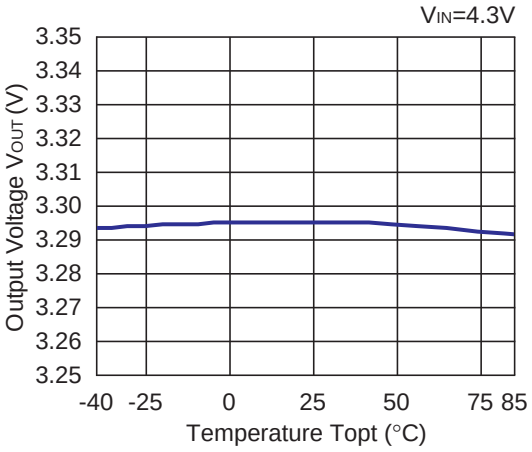

5) Supply Current vs. Temperature (C_{IN}=1.0µF, C_{OUT}=1.0µF, I_{OUT}=0mA)

RP102x121x

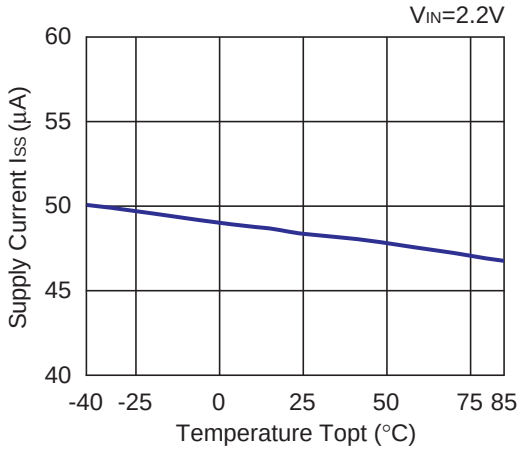

RP102x251x

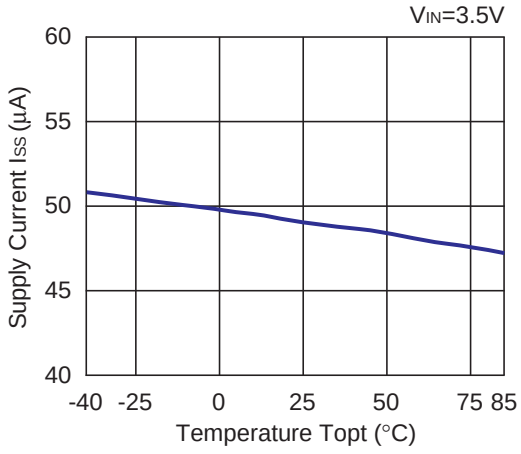

RP102x331x

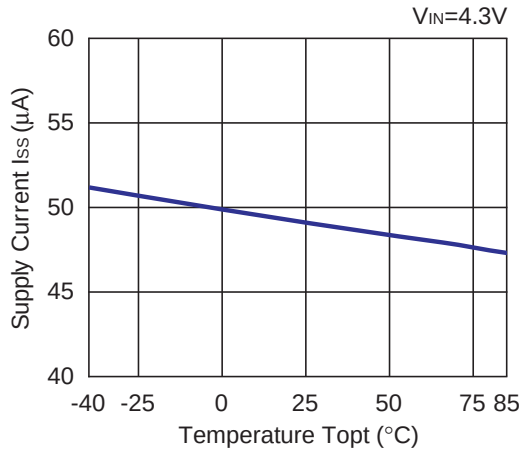

6) Dropout Voltage vs. Output Current (C_{IN}=1.0µF, C_{OUT}=1.0µF)

RP102x121x

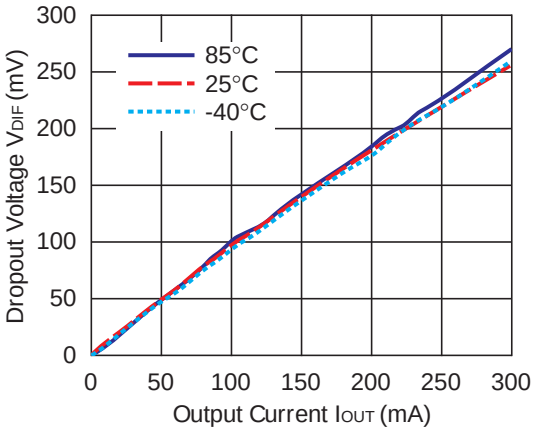

RP102x251x

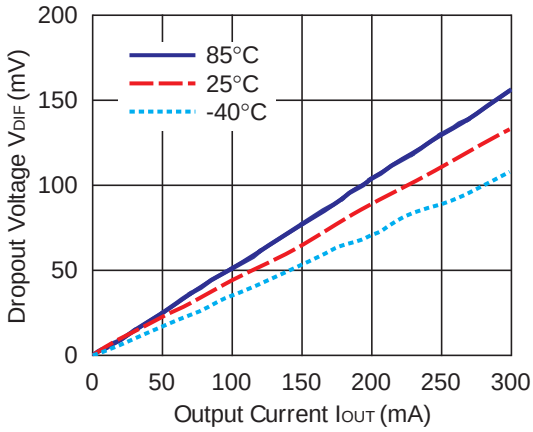

RP102x331x

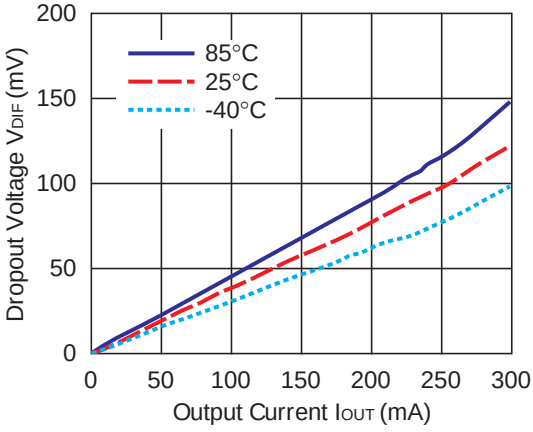

7) Dropout Voltage vs Set Output Voltage (C_{IN}=1.0µF, C_{OUT}=1.0µF, Topt=25°C)

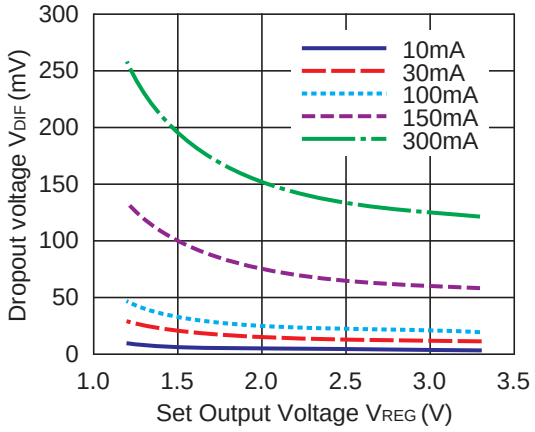

8) Ripple Rejection vs. Input Bias Voltage (C_{IN}=none, C_{OUT}=1.0µF, Ripple=0.2Vp-p, Topt=25°C)

RP102x121x

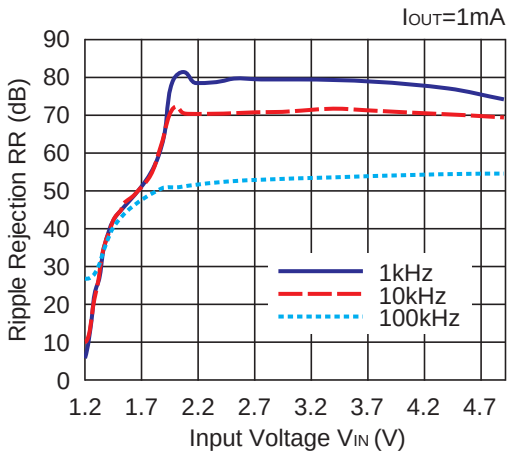

RP102x121x

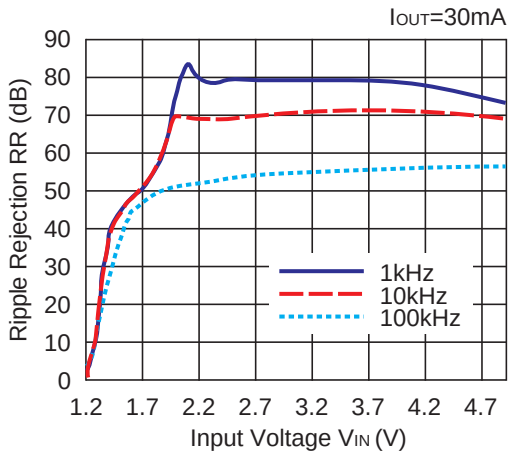

RP102x281x

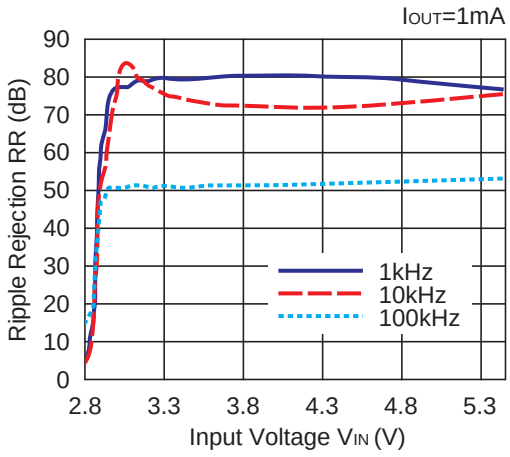

RP102x281x

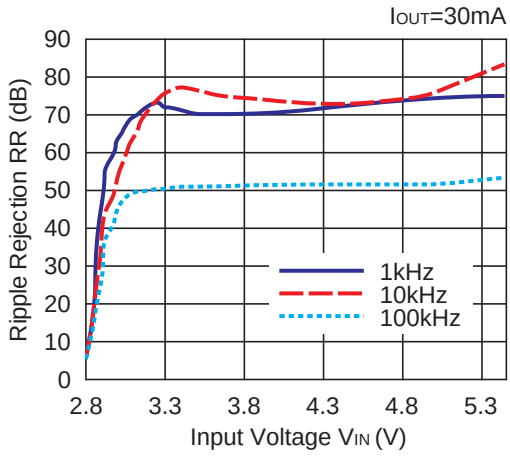

9) Ripple Rejection vs. Frequency (C_{IN}=1.0µF, C_{OUT}=1.0µF, Ripple=0.2Vp-p)

RP102x121x

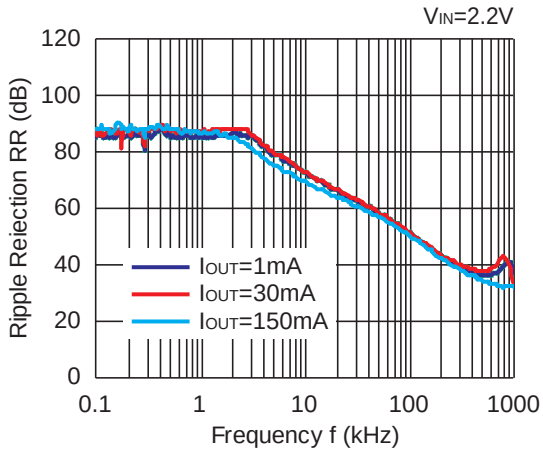

RP102x251x

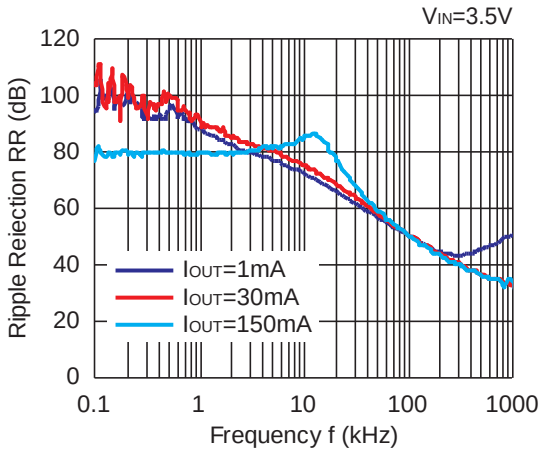

RP102x331x

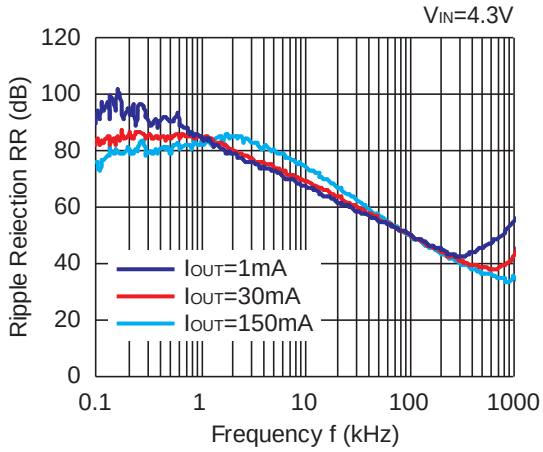

RP102x121x

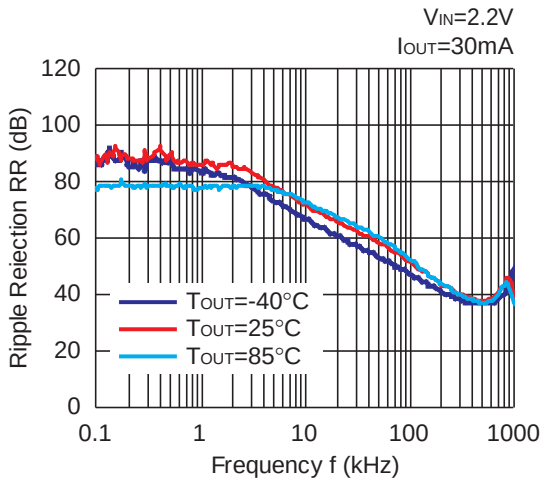

RP102x251x

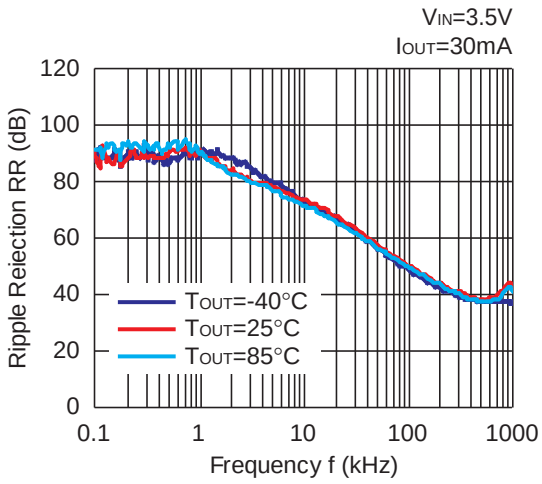

RP102x331x

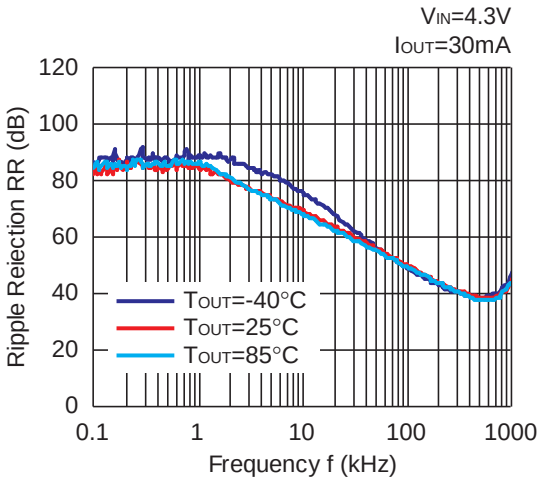

10) Input Transient Response (C_{IN}=none, C_{OUT}=1.0µF, I_{OUT}=30mA, tr=tf=5µs, Topt=25°C)

RP102x121x

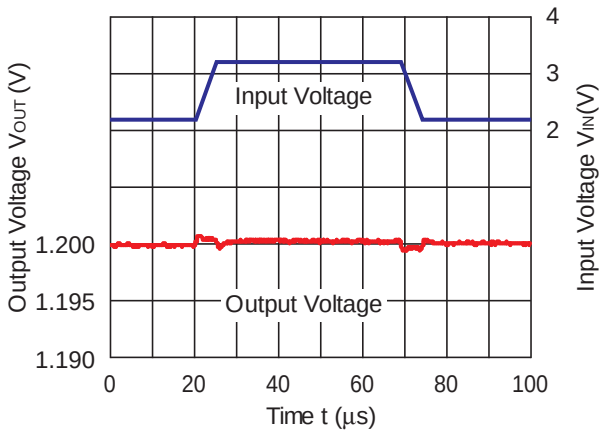

RP102x251x

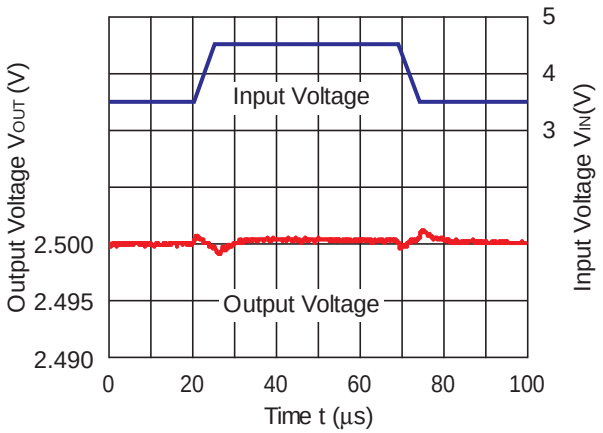

RP102x331x

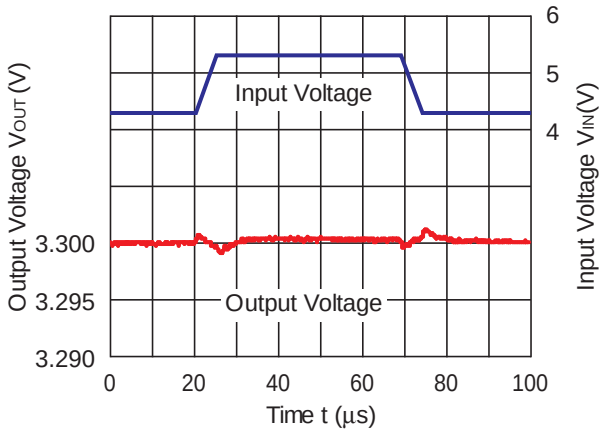

11) Load Transient Response (C_{OUT}=1.0µF, Topt=25°C)

RP102x121x

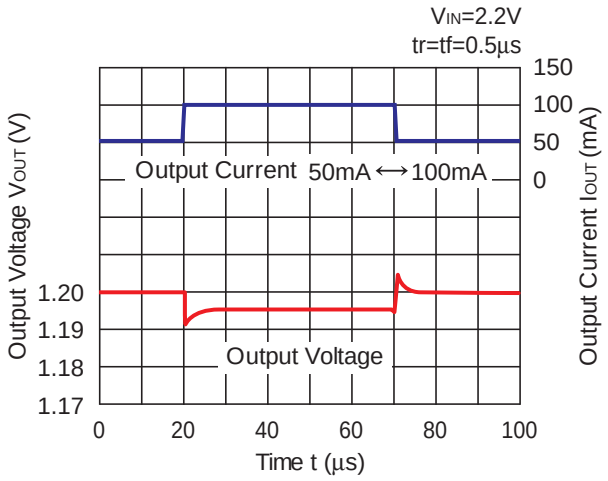

RP102x251x

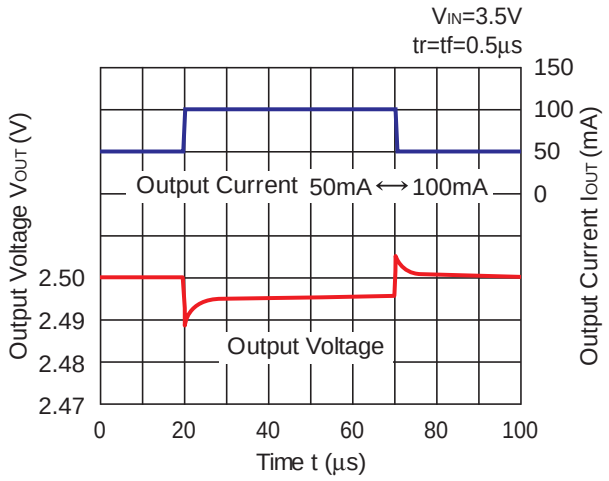

RP102x331x

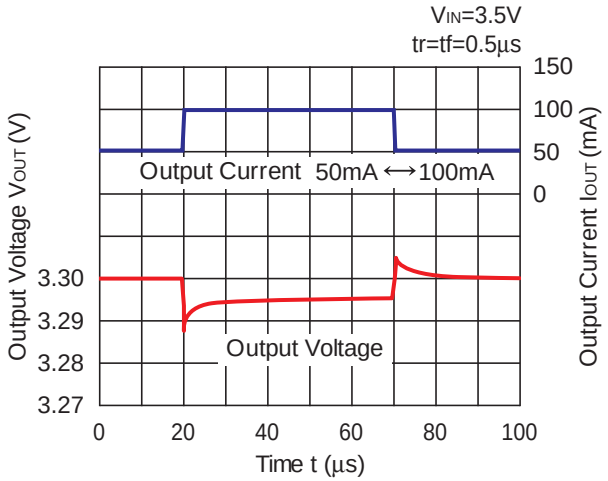

RP102x121x

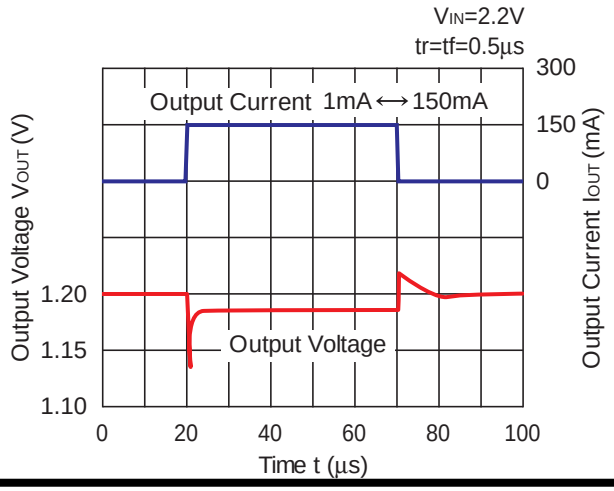

RP102x251x

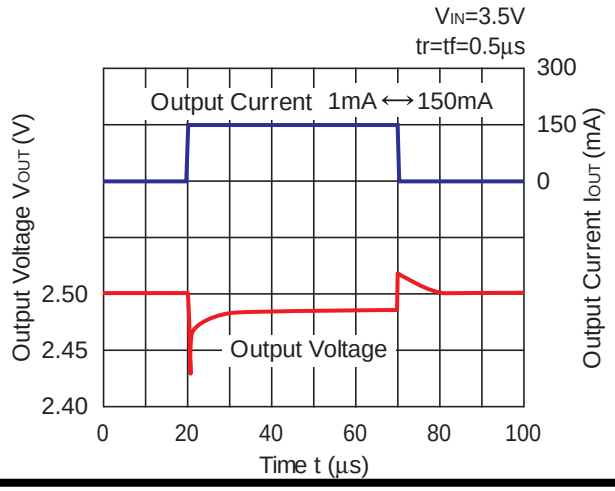

RP102x331x

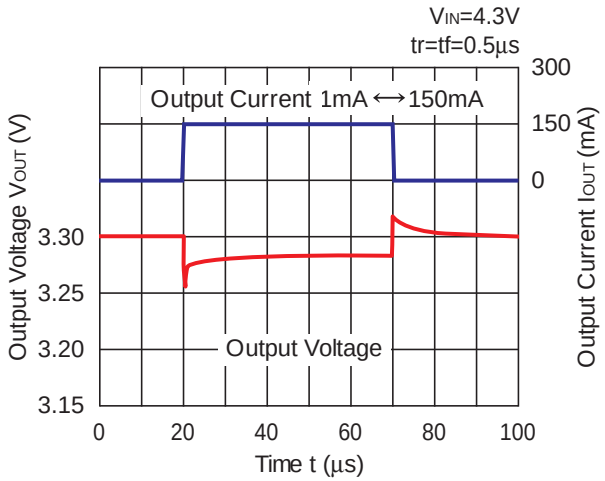

12) Turn On Speed with CE pin (C_{IN}=1.0µF, C_{OUT}=1.0µF, Topt=25°C)

RP102x121x

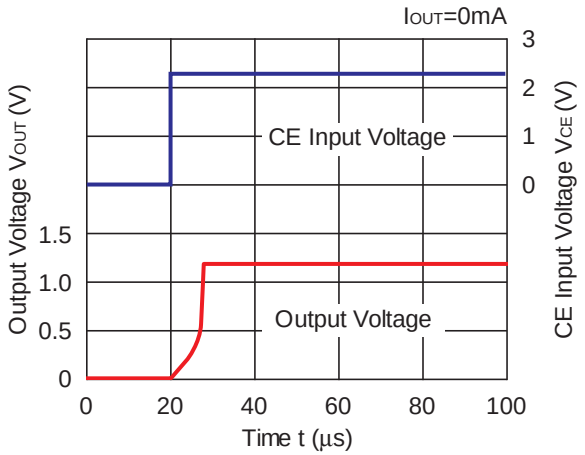

RP102x121x

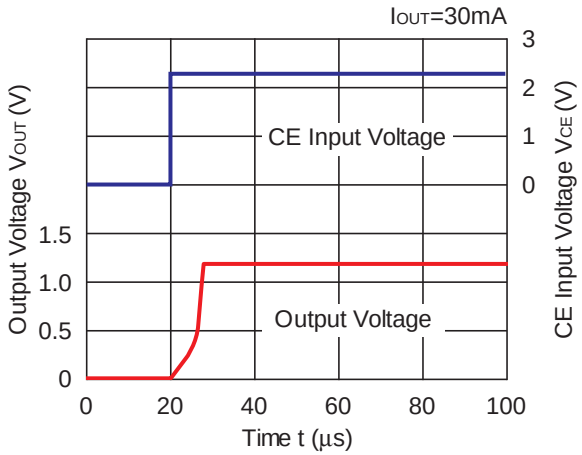

RP102x121x

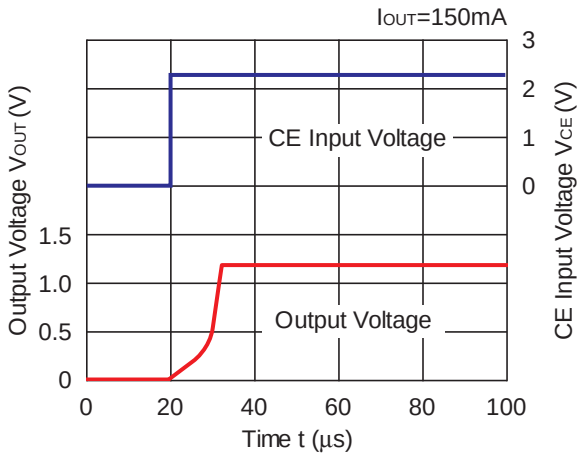

RP102x251x

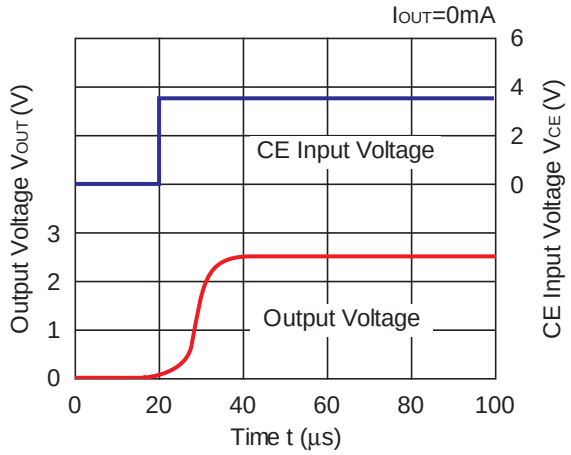

RP102x251x

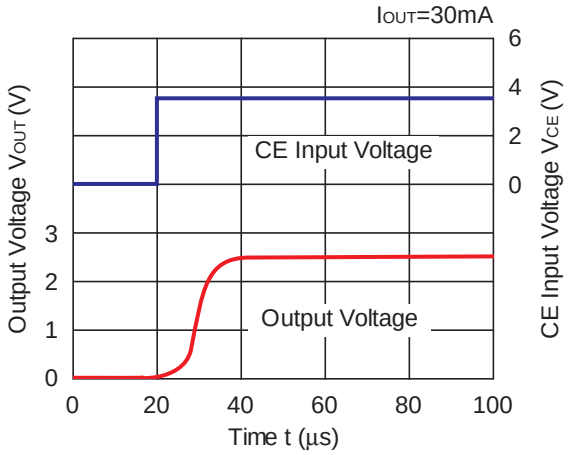

RP102x251x

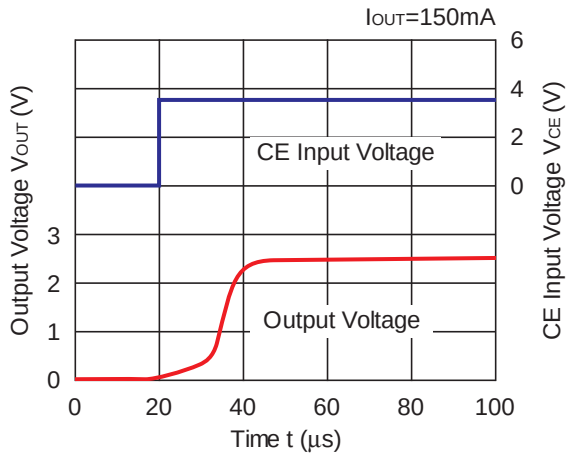

RP102x331x

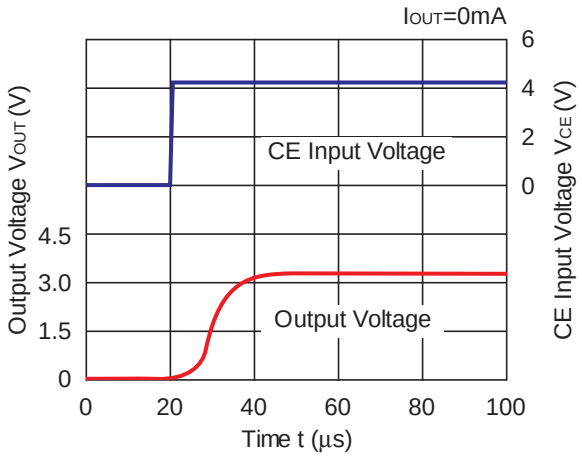

RP102x331x

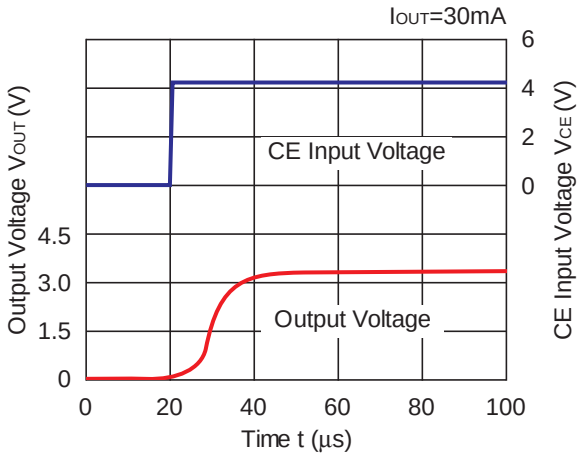

RP102x331x

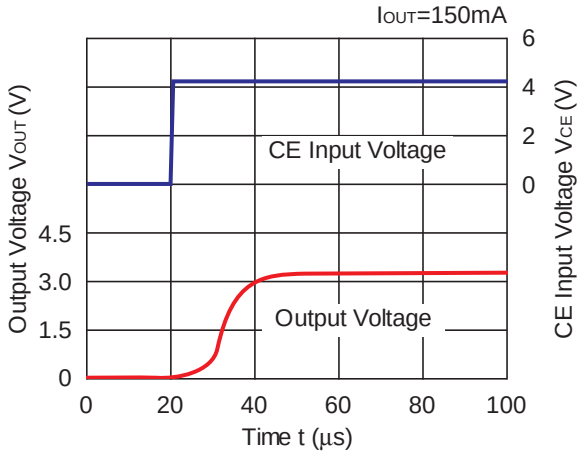

13) Turn OFF Speed with CE pin (D Version) (C_{IN}=1.0µF, C_{OUT}=1.0µF, Topt=25°C)

RP102x121D

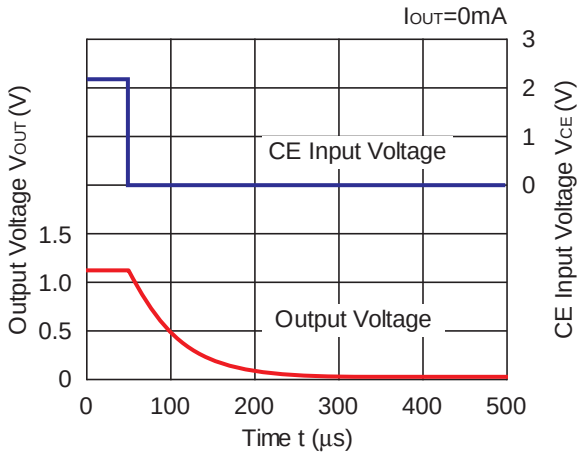

RP102x121D

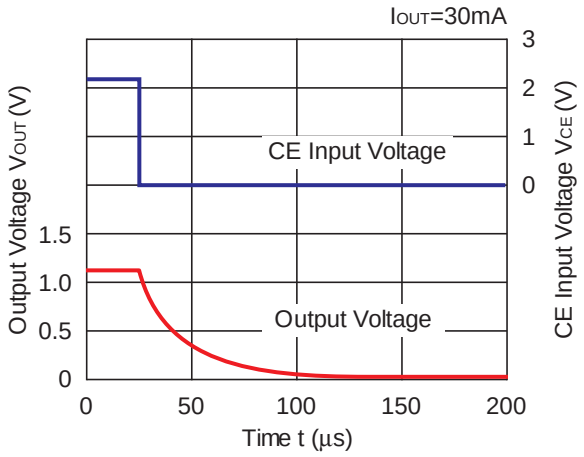

RP102x121D

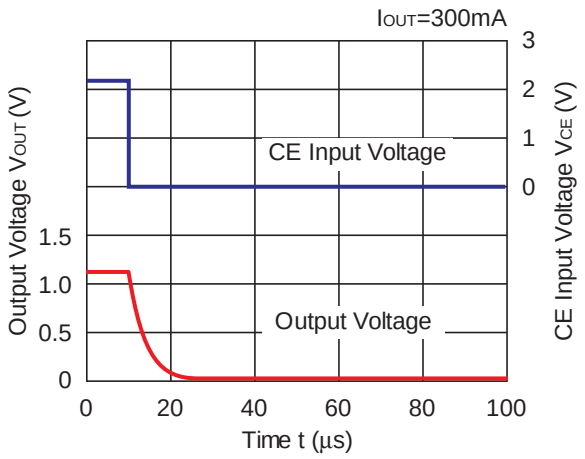

RP102x251x

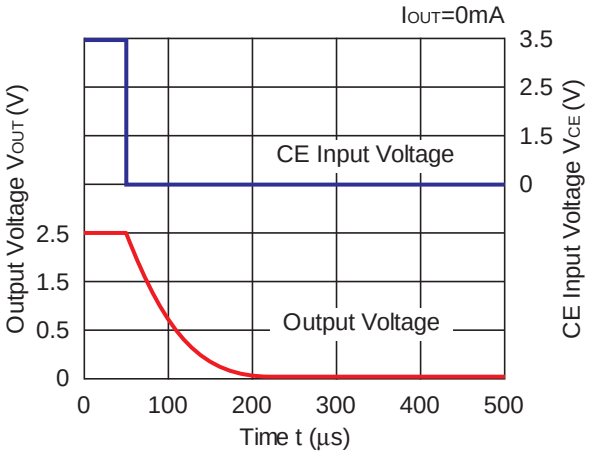

RP102x251x

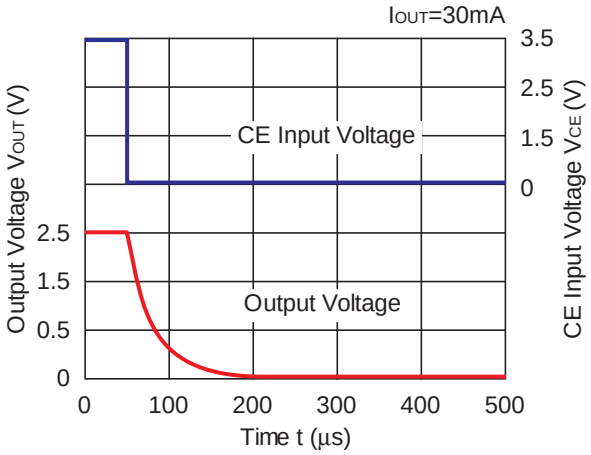

RP102x251x

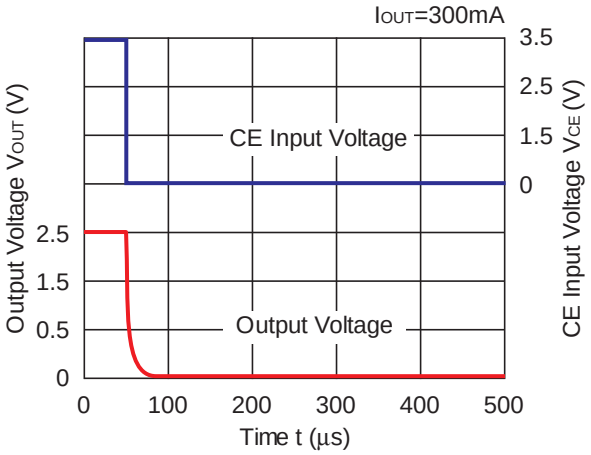

RP102x331x

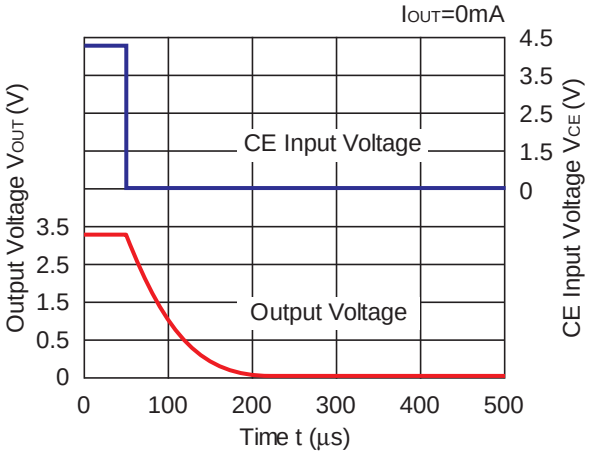

RP102x331x

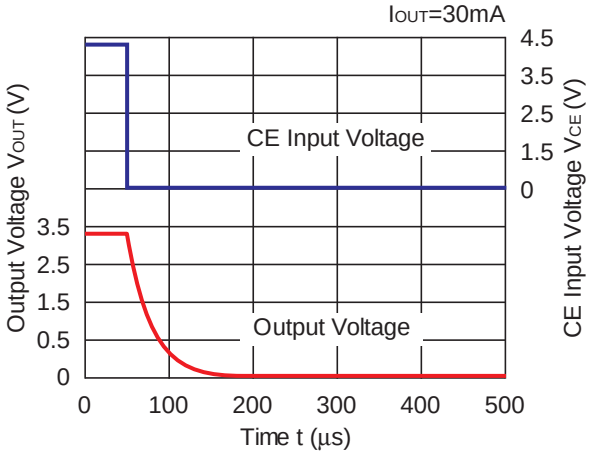

RP102x331x

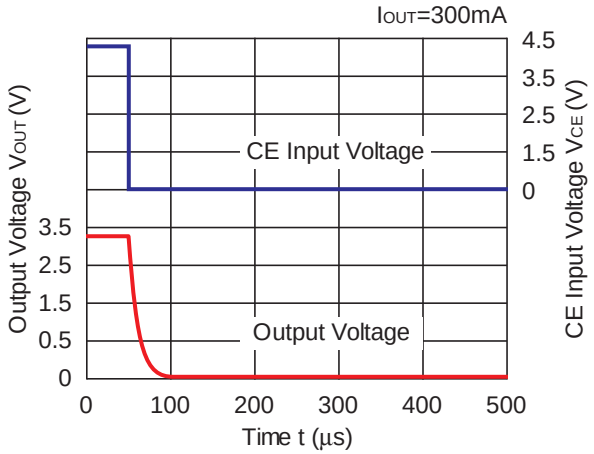
IOUT=300mA
4.5
3.5
2.5
1.5
0
CE Input Voltage
3.5
2.5
1.5
0.5
0
Output Voltage
Output Voltage VOUT (V)
CE Input Voltage VCE (V)
0
100
200
300
400
500
Time t (µs)

ESR vs. Output Current

When using these ICs, consider the following points:

The relations between I_{OUT} (Output Current) and ESR of an output capacitor are shown below.
The conditions when the white noise level is under 40µV (Avg.) are marked as the hatched area in the graph.

Measurement conditions

Frequency Band: 10Hz to 2MHz
Temperature: –40°C to 85°C

RP102x121x

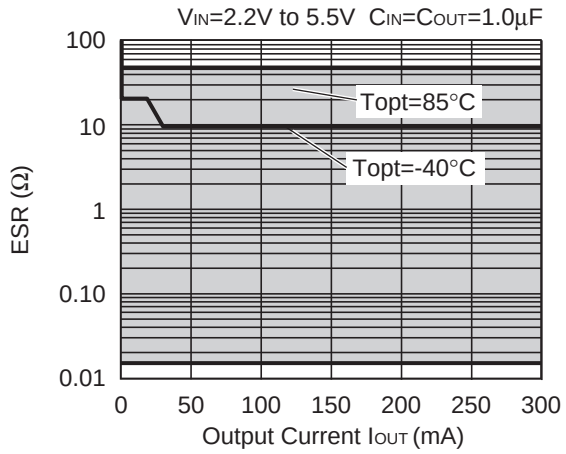

RP102x251x

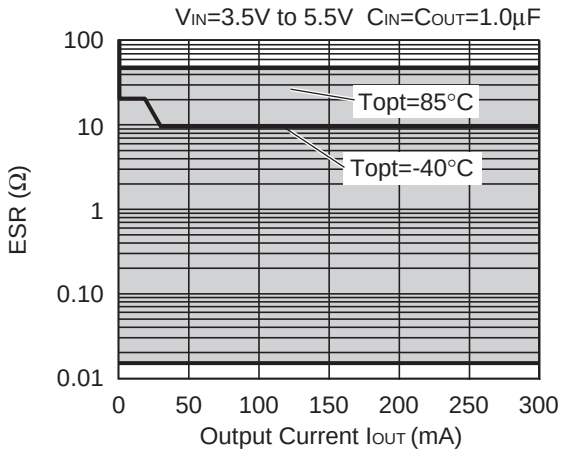

RP102x331x

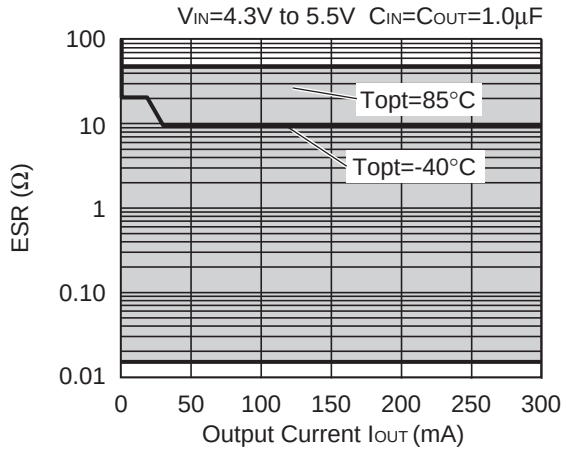

PACKAGE INFORMATION

Power Dissipation (WLCSP-4-P2)

This specification is at mounted on board. Power Dissipation (P_D) depends on conditions of mounting on board. This specification is based on the measurement at the condition below:

Measurement Conditions

	Standard Land Pattern
Environment	Mounting on Board (Wind velocity=0m/s)
Board Material	Glass cloth epoxy plastic (Double-sided)
Board Dimensions	40mm x 40mm x 1.6mm
Copper Ratio	Top side: Approx. 50%, Back side: Approx. 50%
Through-hole	ϕ0.5mm x 4pcs

Measurement Result (Ta=25°C)

	Standard Land Pattern
Power Dissipation	530mW (Tjmax=125°C) 662mW (Tjmax=150°C)
Thermal Resistance	θja=(125-25°C)/0.53W=189°C/W

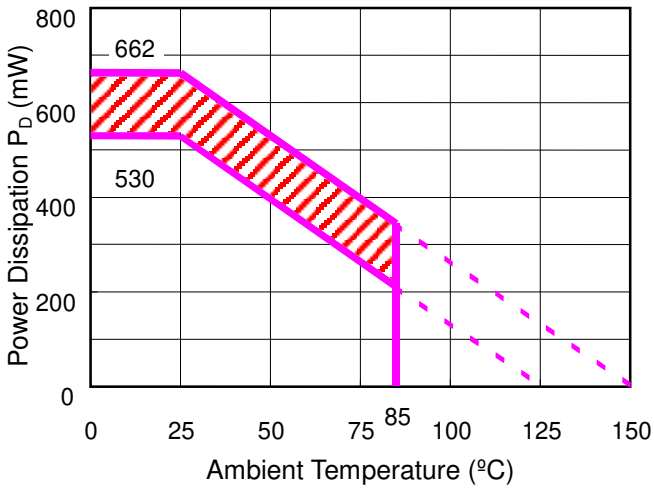

Power Dissipation

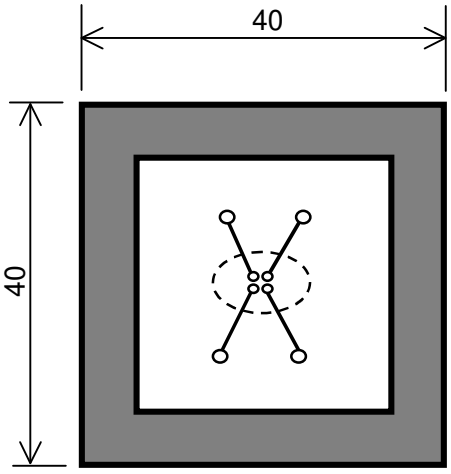

Measurement Board Pattern

IC Mount Area (Unit: mm)

The above graph shows the Power Dissipation of the package based on Tjmax=125°C and Tjmax=150°C.
Operating the IC in the shaded area in the graph might have an influence on its lifetime.
Operating time must be within the time limit described in the table below, in case of operating in the shaded area.

Operating Time	Estimated years (Operating 4 hours/day)
13,000 hours	9years

Package Dimensions (WLCSP-4-P2)

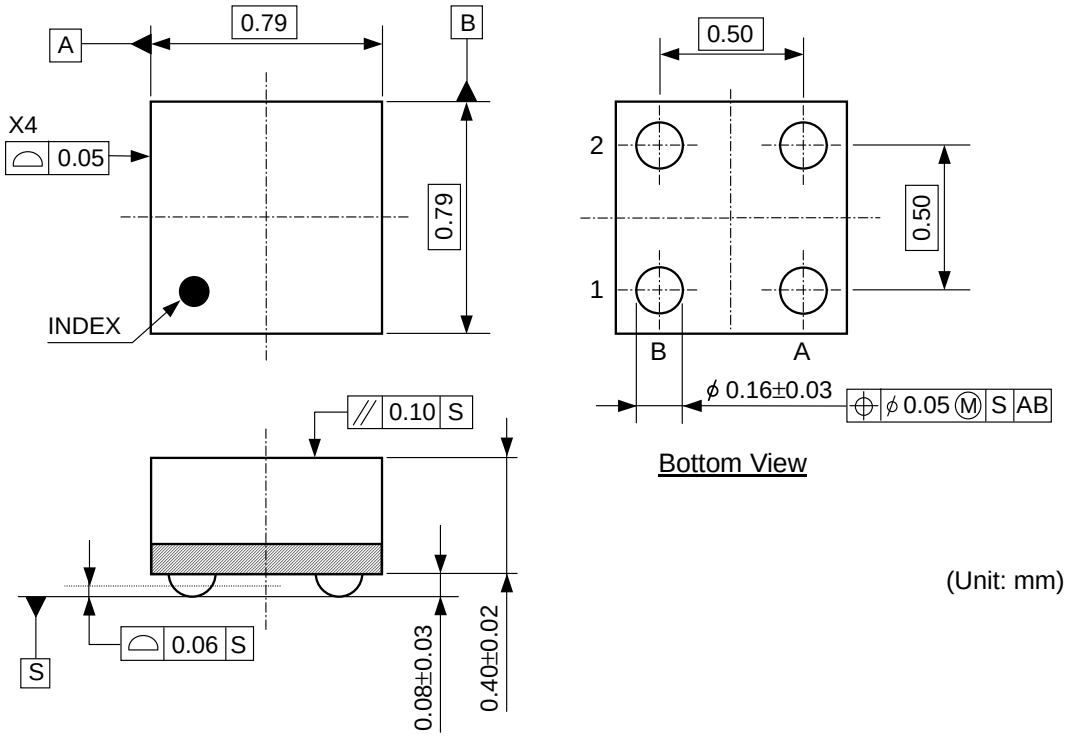

(Unit: mm)

Mark Specifications (WLCSP-4-P2)

①②: Lot Number … Alphanumeric Serial Number

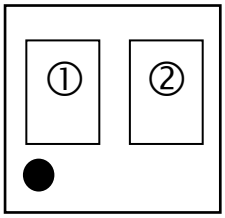

RP102Z Series Mark Specification Table

RP102Zxx1B

Part Number	①②	Vset
RP102K131B	Lot No.	1.3V
RP102K181B	Lot No.	1.8V
RP102K291B	Lot No.	2.9V
RP102K331B	Lot No.	3.3V

RP102Zxx1D

Part Number	①②	Vset
RP102K131D	Lot No.	1.3V
RP102K181D	Lot No.	1.8V
RP102K291D	Lot No.	2.9V
RP102K331D	Lot No.	3.3V

Power Dissipation (DFN(PL)1820-6)

This specification is at mounted on board. Power Dissipation (P_D) depends on conditions of mounting on board. This specification is based on the measurement at the condition below:

Measurement Conditions

	Standard Land Pattern
Environment	Mounting on Board (Wind velocity=0m/s)
Board Material	Glass cloth epoxy plastic (Double-sided)
Board Dimensions	40mm x 40mm x 1.6mm
Copper Ratio	Top side: Approx. 50%, Back side: Approx. 50%
Through-hole	ϕ0.54mm x 30pcs

Measurement Result (Ta=25°C)

	Standard Land Pattern
Power Dissipation	880mW(Tjmax=125°C) 1100mW(Tjmax=150°C)
Thermal Resistance	θja=(125-25°C)/0.88W=114°C /W

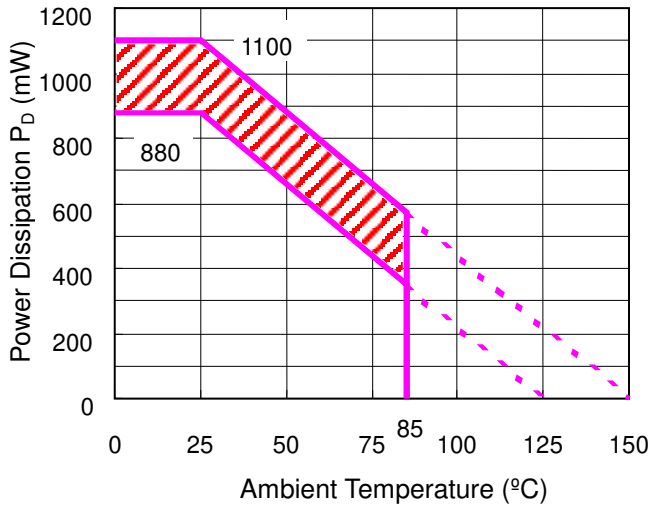

Power Dissipation

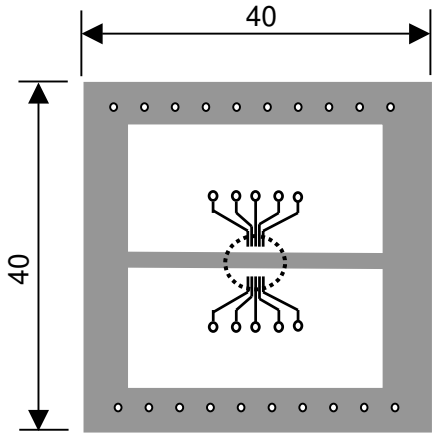

Measurement Board Pattern

IC Mount Area (Unit: mm)

The above graph shows the Power Dissipation of the package based on Tjmax=125°C and Tjmax=150°C. Operating the IC in the shaded area in the graph might have an influence on its lifetime.

Operating time must be within the time limit described in the table below, in case of operating in the shaded area.

Operating Time	Estimated years (Operating 4 hours/day)
13,000 hours	9years

Package Dimensions (DFN(PL)1820-6)

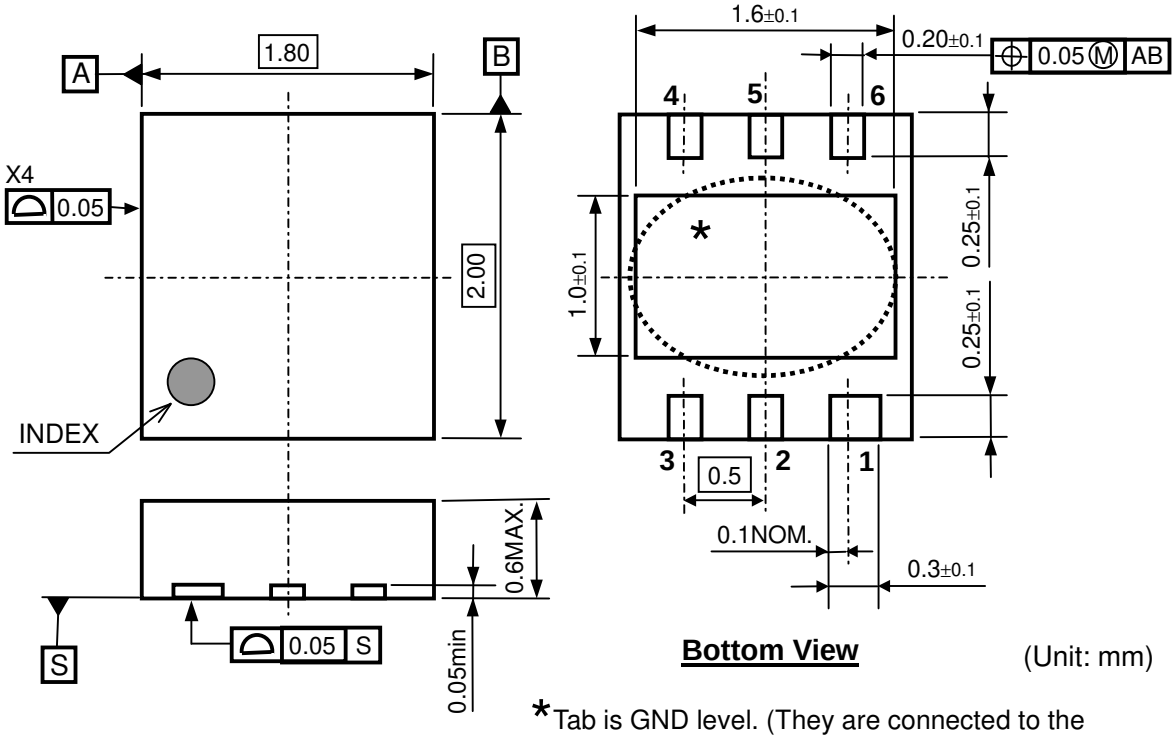

(Unit: mm)

*Tab is GND level. (They are connected to the reverse side of this IC.)
The tab is better to be connected to the GND, but leaving it open is also acceptable.

Mark Specifications (DFN(PL)1820-6)

①②③④: Product Code … Refer to "RP102K Series Mark Specification Table".
⑤⑥: Lot Number … Alphanumeric Serial Number

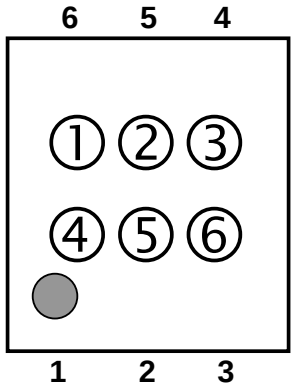

RP102K Series Mark Specification Table

PKG: DFN(PL)1820-6

RP102Kxx1B

Part Number	①②③④	Vset
RP102K121B	**AC01**	1.2V
RP102K131B	**AC02**	1.3V
RP102K151B	**AC03**	1.5V
RP102K181B	**AC04**	1.8V
RP102K251B	**AC05**	2.5V
RP102K261B	**AC06**	2.6V
RP102K281B	**AC07**	2.8V
RP102K281B5	**AC08**	2.85V
RP102K291B	**AC09**	2.9V
RP102K301B	**AC10**	3.0V
RP102K331B	**AC11**	3.3V
RP102K181B5	**AC12**	1.85V
RP102K271B	**AC13**	2.7V
RP102K121B5	**AC14**	1.25V
RP102K311B	**AC15**	3.1V
RP102K171B5	**AC16**	1.75V
RP102K211B	**AC17**	2.1V
RP102K141B	**AC18**	1.4V
RP102K321B	**AC19**	3.2V
RP102K171B	**AC20**	1.7V
RP102K201B	**AC21**	2.0V
RP102K291B5	**AC22**	2.95V
RP102K321B5	**AC23**	3.25V
RP102K161B	**AC24**	1.6V
RP102K191B	**AC25**	1.9V
RP102K221B	**AC26**	2.2V
RP102K231B	**AC27**	2.3V
RP102K241B	**AC28**	2.4V

RP102Kxx1D

Part Number	①②③④	Vset
RP102K121D	**AD01**	1.2V
RP102K131D	**AD02**	1.3V
RP102K151D	**AD03**	1.5V
RP102K181D	**AD04**	1.8V
RP102K251D	**AD05**	2.5V
RP102K261D	**AD06**	2.6V
RP102K281D	**AD07**	2.8V
RP102K281D5	**AD08**	2.85V
RP102K291D	**AD09**	2.9V
RP102K301D	**AD10**	3.0V
RP102K331D	**AD11**	3.3V
RP102K181D5	**AD12**	1.85V
RP102K271D	**AD13**	2.7V
RP102K121D5	**AD14**	1.25V
RP102K311D	**AD15**	3.1V
RP102K171D5	**AD16**	1.75V
RP102K211D	**AD17**	2.1V
RP102K141D	**AD18**	1.4V
RP102K321D	**AD19**	3.2V
RP102K171D	**AD20**	1.7V
RP102K201D	**AD21**	2.0V
RP102K291D5	**AD22**	2.95V
RP102K321D5	**AD23**	3.25V
RP102K161D	**AD24**	1.6V
RP102K191D	**AD25**	1.9V
RP102K221D	**AD26**	2.2V
RP102K231D	**AD27**	2.3V
RP102K241D	**AD28**	2.4V

Power Dissipation (SOT-23-5)

This specification is at mounted on board. Power Dissipation (P_D) depends on conditions of mounting on board. This specification is based on the measurement at the condition below:
(Power Dissipation (SOT-23-5) is substitution of SOT-23-6.)

Measurement Conditions

	Standard Test Land Pattern
Environment	Mounting on Board (Wind velocity=0m/s)
Board Material	Glass cloth epoxy plastic (Double sided)
Board Dimensions	40mm * 40mm * 1.6mm
Copper Ratio	Top side: Approx. 50%, Back side: Approx. 50%
Through-holes	ϕ 0.5mm * 44pcs

Measurement Result (Ta=25°C)

	Standard Test Land Pattern	**Free Air**
Power Dissipation	420mW(Tjmax=125°C) 525mW(Tjmax=150°C)	250mW(Tjmax=125°C)
Thermal Resistance	θja = (125-25°C)/0.42W= 263°C/W	400°C/W

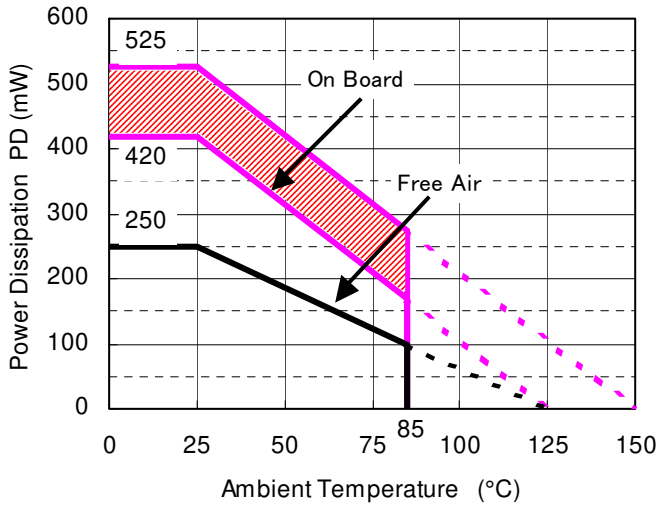

Power Dissipation

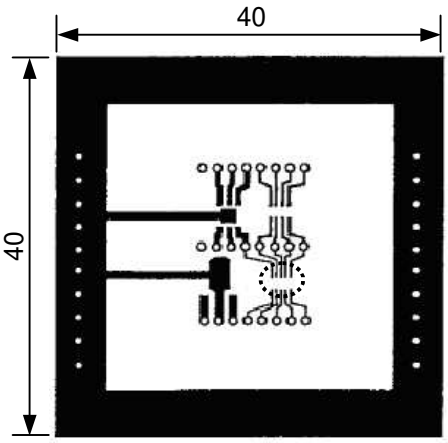

Measurement Board Pattern

IC Mount Area (Unit: mm)

The above graph shows the Power Dissipation of the package based on Tjmax=125°C and Tjmax=150°C.
Operating the IC in the shaded area in the graph might have an influence it's lifetime.
Operating time must be within the time limit described in the table below, in case of operating in the shaded area.

Operating Time	Estimated years (Operating four hours/day)
2,300 hours	1.5years

Package Dimensions (SOT-23-5)

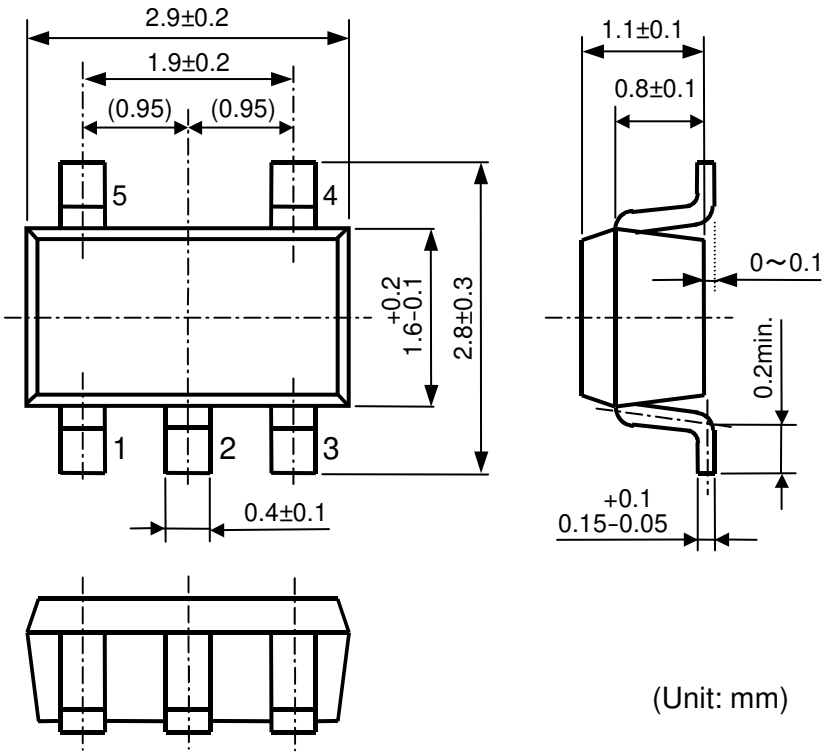

(Unit: mm)

Mark Specifications (SOT-23-5)

①②③: Product Code … Refer to "RP102N Series Mark Specification Table".
④⑤: Lot Number … Alphanumeric Serial Number

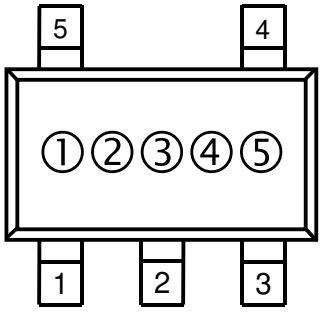

RP102N Series Mark Specification Table

PKG: SOT-23-5

RP102Nxx1B

Part Number	①②③	Vset
RP102N121B	**60A**	1.2V
RP102N131B	**60B**	1.3V
RP102N151B	**60C**	1.5V
RP102N181B	**60D**	1.8V
RP102N251B	**60E**	2.5V
RP102N261B	**60F**	2.6V
RP102N281B	**60G**	2.8V
RP102N281B5	**60H**	2.85V
RP102N291B	**60J**	2.9V
RP102N301B	**60K**	3.0V
RP102N331B	**60L**	3.3V
RP102N181B5	**60M**	1.85V
RP102N271B	**60N**	2.7V
RP102N121B5	**60P**	1.25V
RP102N311B	**60Q**	3.1V
RP102N171B5	**60R**	1.75V
RP102N211B	**60S**	2.1V
RP102N141B	**60T**	1.4V
RP102N321B	**60U**	3.2V
RP102N171B	**60V**	1.7V
RP102N201B	**60W**	2.0V
RP102N291B5	**60X**	2.95V
RP102N321B5	**60Y**	3.25V
RP102N161B5	**60Z**	1.6V
RP102N191B5	**62A**	1.9V
RP102N221B5	**62B**	2.2V
RP102N231B5	**62C**	2.3V
RP102N241B5	**62D**	2.4V

RP102Nxx1D

Part Number	①②③	Vset
RP102N121D	**61A**	1.2V
RP102N131D	**61B**	1.3V
RP102N151D	**61C**	1.5V
RP102N181D	**61D**	1.8V
RP102N251D	**61E**	2.5V
RP102N261D	**61F**	2.6V
RP102N281D	**61G**	2.8V
RP102N281D5	**61H**	2.85V
RP102N291D	**61J**	2.9V
RP102N301D	**61K**	3.0V
RP102N331D	**61L**	3.3V
RP102N181D5	**61M**	1.85V
RP102N271D	**61N**	2.7V
RP102N121D5	**61P**	1.25V
RP102N311D	**61Q**	3.1V
RP102N171D5	**61R**	1.75V
RP102N211D	**61S**	2.1V
RP102N141D	**61T**	1.4V
RP102N321D	**61U**	3.2V
RP102N171D	**61V**	1.7V
RP102N201D	**61W**	2.0V
RP102N291D5	**61X**	2.95V
RP102N321D5	**61Y**	3.25V
RP102N161D	**61Z**	1.6V
RP102N191D	**63A**	1.9V
RP102N221D	**63B**	2.2V
RP102N231D	**63C**	2.3V
RP102N241D	**63D**	2.4V

No.	Inspection Items	Inspection Criteria	Figure
1	Package chipping	A≥0.2mm is rejected B≥0.2mm is rejected C≥0.2mm is rejected And, Package chipping to Si surface and to bump is rejected.	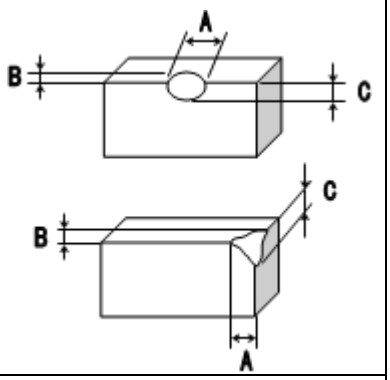
2	Si surface chipping	A≥0.2mm is rejected B≥0.2mm is rejected C≥0.2mm is rejected But, even if A≥0.2mm, B≤0.1mm is acceptable.	
3	No bump	No bump is rejected.	
4	Marking miss	To reject incorrect marking, such as another product name marking or another lot No. marking.	
5	No marking	To reject no marking on the package.	
6	Reverse direction of marking	To reject reverse direction of marking character.	
7	Defective marking	To reject unreadable marking. (Microscope: X15/ White LED/ Viewed from vertical direction)	
8	Scratch	To reject unreadable marking character by scratch. (Microscope: X15/ White LED/ Viewed from vertical direction)	
9	Stain and Foreign material	To reject unreadable marking character by stain and foreign material. (Microscope: X15/ White LED/ Viewed from vertical direction)	

1. The products and the product specifications described in this document are subject to change or discontinuation of production without notice for reasons such as improvement. Therefore, before deciding to use the products, please refer to our sales representatives for the latest information thereon.
2. The materials in this document may not be copied or otherwise reproduced in whole or in part without the prior written consent of us.
3. This product and any technical information relating thereto are subject to complementary export controls (so-called KNOW controls) under the Foreign Exchange and Foreign Trade Law, and related politics ministerial ordinance of the law. (Note that the complementary export controls are inapplicable to any application-specific products, except rockets and pilotless aircraft, that are insusceptible to design or program changes.) Accordingly, when exporting or carrying abroad this product, follow the Foreign Exchange and Foreign Trade Control Law and its related regulations with respect to the complementary export controls.
4. The technical information described in this document shows typical characteristics and example application circuits for the products. The release of such information is not to be construed as a warranty of or a grant of license under our or any third party's intellectual property rights or any other rights.
5. The products listed in this document are intended and designed for use as general electronic components in standard applications (office equipment, telecommunication equipment, measuring instruments, consumer electronic products, amusement equipment etc.). Those customers intending to use a product in an application requiring extreme quality and reliability, for example, in a highly specific application where the failure or misoperation of the product could result in human injury or death should first contact us.
    - Aerospace Equipment
    - Equipment Used in the Deep Sea
    - Power Generator Control Equipment (nuclear, steam, hydraulic, etc.)
    - Life Maintenance Medical Equipment
    - Fire Alarms / Intruder Detectors
    - Vehicle Control Equipment (automotive, airplane, railroad, ship, etc.)
    - Various Safety Devices
    - Traffic control system
    - Combustion equipment

    In case your company desires to use this product for any applications other than general electronic equipment mentioned above, make sure to contact our company in advance. Note that the important requirements mentioned in this section are not applicable to cases where operation requirements such as application conditions are confirmed by our company in writing after consultation with your company.
6. We are making our continuous effort to improve the quality and reliability of our products, but semiconductor products are likely to fail with certain probability. In order to prevent any injury to persons or damages to property resulting from such failure, customers should be careful enough to incorporate safety measures in their design, such as redundancy feature, fire containment feature and fail-safe feature. We do not assume any liability or responsibility for any loss or damage arising from misuse or inappropriate use of the products.
7. The products have been designed and tested to function within controlled environmental conditions. Do not use products under conditions that deviate from methods or applications specified in this datasheet. Failure to employ the products in the proper applications can lead to deterioration, destruction or failure of the products. We shall not be responsible for any bodily injury, fires or accident, property damage or any consequential damages resulting from misuse or misapplication of the products.
8. Quality Warranty
    8-1. Quality Warranty Period
    In the case of a product purchased through an authorized distributor or directly from us, the warranty period for this product shall be one (1) year after delivery to your company. For defective products that occurred during this period, we will take the quality warranty measures described in section 8-2. However, if there is an agreement on the warranty period in the basic transaction agreement, quality assurance agreement, delivery specifications, etc., it shall be followed.
    8-2. Quality Warranty Remedies
    When it has been proved defective due to manufacturing factors as a result of defect analysis by us, we will either deliver a substitute for the defective product or refund the purchase price of the defective product.
    Note that such delivery or refund is sole and exclusive remedies to your company for the defective product.
    8-3. Remedies after Quality Warranty Period
    With respect to any defect of this product found after the quality warranty period, the defect will be analyzed by us. On the basis of the defect analysis results, the scope and amounts of damage shall be determined by mutual agreement of both parties. Then we will deal with upper limit in Section 8-2. This provision is not intended to limit any legal rights of your company.
9. Anti-radiation design is not implemented in the products described in this document.
10. The X-ray exposure can influence functions and characteristics of the products. Confirm the product functions and characteristics in the evaluation stage.
11. WLCSP products should be used in light shielded environments. The light exposure can influence functions and characteristics of the products under operation or storage.
12. Warning for handling Gallium and Arsenic (GaAs) products (Applying to GaAs MMIC, Photo Reflector). These products use Gallium (Ga) and Arsenic (As) which are specified as poisonous chemicals by law. For the prevention of a hazard, do not burn, destroy, or process chemically to make them as gas or power. When the product is disposed of, please follow the related regulation and do not mix this with general industrial waste or household waste.
13. Please contact our sales representatives should you have any questions or comments concerning the products or the technical information.

NISSHINBO

Nisshinbo Micro Devices Inc.

Official website

https://www.nisshinbo-microdevices.co.jp/en/

Purchase information

https://www.nisshinbo-microdevices.co.jp/en/buy/

ENTEGRECİ

Bu belge www.entegreci.com üzerinden sunulmaktadır.

Elektronik komponent tedarikinde Entegreci

Entegreci, Eskişehir merkezli, Türkiye geneline satış yapan bir elektronik komponent mağazasıdır. Entegreler (IC), mikrodenetleyiciler, transistörler, diyotlar, pasif elemanlar, konnektörler, modüller ve geliştirme kartları tek adetten seri üretim adetlerine kadar satılır. Ürün sayfalarında güncel stok durumunu, fiyatı ve datasheet bağlantısını bulabilirsiniz.

Parça koduyla arama

Üretici parça numarasını yazın; stok ve fiyatı hemen görün.

www.entegreci.com

Ürün kategorileri

Entegreden kapasitöre tüm elektronik komponent kategorileri.

Kategorilere göz atın

Üreticiler

Aradığınız üreticinin ürünlerini tek sayfada inceleyin.

Üreticileri görün

Toplu alım ve teklif

Listede olmayan ya da yüksek adetli parçalar için teklif isteyin.

Teklif isteyin

www.entegreci.com | **destek@entegreci.com** | **0850 305 90 34**

Entegreci is an online electronic components store based in Türkiye. Search by manufacturer part number to see stock, prices and datasheets for integrated circuits, microcontrollers, transistors, passive components and connectors, or request a quote for parts that are not listed.

Bu sayfa Entegreci tarafından eklenmiştir. Belgenin önceki sayfaları asıl yayıncısına aittir ve içeriği değiştirilmemiştir; en güncel sürüm için belgenin yayıncısına başvurun.