NISSHINBO

RP103x SERIES

LOW NOISE 150mA LDO REGULATOR

NO.EA-149-160426

OUTLINE

The RP103x Series are CMOS-based voltage regulator ICs with high output voltage accuracy, extremely low supply current, low ON-resistance, and high ripple rejection. Each of these ICs consists of a voltage reference unit, an error amplifier, resistor-net for voltage setting, a current limit circuit, and a chip enable circuit.

These ICs perform with low dropout voltage and a chip enable function. The line transient response and load transient response of the RP103x Series are excellent, thus these ICs are very suitable for the power supply for hand-held communication equipment.

The output voltage of these ICs is fixed with high accuracy. Since the packages for these ICs are DFN(PL)1010-4, SC-82AB, SC-88A, SOT-23-5, therefore high density mounting of the ICs on boards is possible.

FEATURES

- Supply Current ..... Typ. 36μA
- Standby Mode ..... Typ. 0.1μA
- Dropout Voltage..... Typ. 0.21V (I_{OUT}=150mA, V_{OUT}=2.8V)
- Ripple Rejection ..... Typ. 75dB (f=1kHz)
- Temperature-Drift Coefficient of Output Voltage ..... Typ. ±30ppm/°C
- Line Regulation ..... Typ. 0.02%/V
- Output Voltage Accuracy..... ±1.0%
- Packages..... DFN(PL)1010-4, SC-82AB, SC-88A, SOT-23-5
- Input Voltage Range..... 1.7V to 5.25V
- Output Voltage Range..... 1.2V to 3.3V (0.1V steps)
  (For other voltages, please refer to MARK INFORMATIONS.)
- Built-in Fold Back Protection Circuit..... Typ. 40mA (Current at short mode)
- Ceramic capacitors are recommended to be used with this IC .... 0.47μF or more

APPLICATIONS

- Power source for portable communication equipment.
- Power source for electrical appliances such as cameras, VCRs and camcorders.
- Power source for battery-powered equipment.
- Power source for home appliances.

BLOCK DIAGRAMS

RP103xxxxB

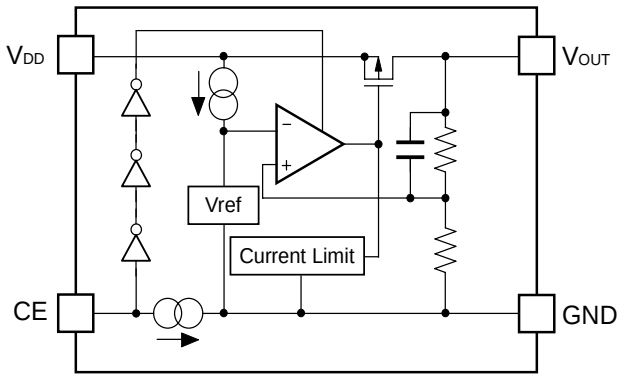

RP103xxxxD

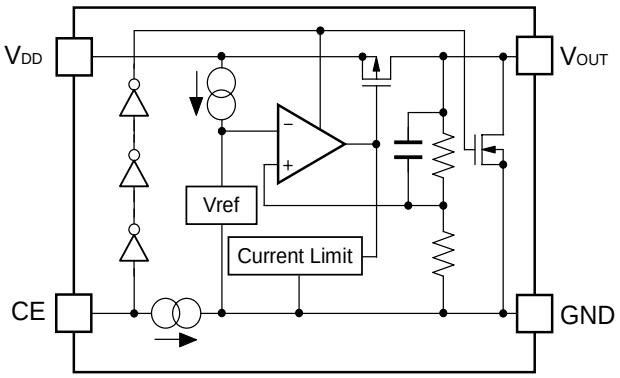

SELECTION GUIDE

The output voltage, auto discharge function, package, and the taping type, etc. for the ICs can be selected at the user's request.

Product Name	Package	Quantity per Reel	Pb Free	Halogen Free
RP103Kxx1∗-TR	DFN(PL)1010-4	10,000 pcs	Yes	Yes
RP103Qxx1∗-TR-FE	SC-82AB	3,000 pcs	Yes	Yes
RP103Qxx2∗-TR-FE	SC-88A	3,000 pcs	Yes	Yes
RP103Nxx1∗-TR-FE	SOT-23-5	3,000 pcs	Yes	Yes

xx: The set output voltage (V_{SET}) can be designated in the range from 1.2V to 3.3V in 0.1V steps.

Exception: 1.85V=RP103x18x∗5-xx
2.85V=RP103x28x∗5-xx

∗: CE pin polarity and auto discharge function at off state are options as follows.
(B) "H" active, without auto discharge function at off state
(D) "H" active, with auto discharge function at off state

PIN CONFIGURATIONS

● **DFN(PL)1010-4**

Top View

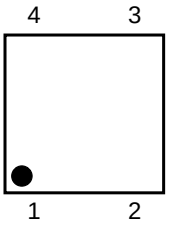

Bottom View

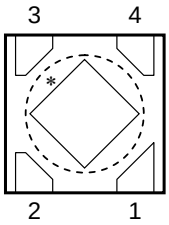

● **SC-82AB**

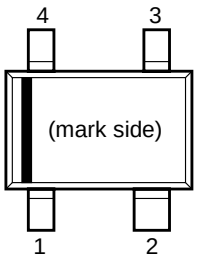

● **SC-88A**

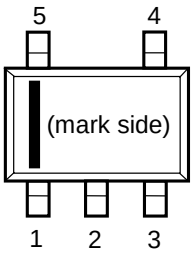

● **SOT-23-5**

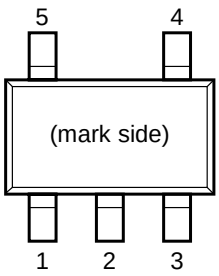

PIN DESCRIPTIONS

● **DFN(PL)1010-4**

Pin No	Symbol	Pin Description
1	V_{OUT}	Output Pin
2	GND	Ground Pin
3	CE	Chip Enable Pin ("H" Active)
4	V_{DD}	Input Pin

∗) The tab on the bottom of the package enhances thermal performance and is electrically connected to GND (substarate level). It is recommended that the tab be connected to the ground plane on the board. If not, the tab can be left open.

● **SC-82AB**

Pin No	Symbol	Pin Description
1	CE	Chip Enable Pin ("H" Active)
2	GND	Ground Pin
3	V_{OUT}	Output Pin
4	V_{DD}	Input Pin

● **SC-88A**

Pin No	Symbol	Pin Description
1	CE	Chip Enable Pin ("H" Active)
2	NC	No Connection
3	GND	Ground Pin
4	V_{OUT}	Output Pin
5	V_{DD}	Input Pin

● **SOT-23-5**

Pin No	Symbol	Pin Description
1	V_{DD}	Input Pin
2	GND	Ground Pin
3	CE	Chip Enable Pin ("H" Active)
4	NC	No Connection
5	V_{OUT}	Output Pin

ABSOLUTE MAXIMUM RATINGS

Symbol	Item	Rating	Unit
V_{IN}	Input Voltage	6.0	V
V_{CE}	Input Voltage (CE Pin)	6.0	V
V_{OUT}	Output Voltage	−0.3 to V_{IN}+0.3	V
I_{OUT}	Output Current	180	mA
P_D	Power Dissipation* (DFN(PL)1010-4)	400	mW
	Power Dissipation* (SC-82AB)	380	
	Power Dissipation* (SC-88A)	380	
	Power Dissipation* (SOT-23-5)	420	
Topt	Operating Temperature Range	−40 to 85	°C
Tstg	Storage Temperature Range	−55 to 125	°C

∗) For Power Dissipation, please refer to PACKAGE INFORMATION.

ABSOLUTE MAXIMUM RATINGS

Electronic and mechanical stress momentarily exceeded absolute maximum ratings may cause the permanent damages and may degrade the life time and safety for both device and system using the device in the field.
The functional operation at or over these absolute maximum ratings is not assured.

RECOMMENDED OPERATING CONDITIONS (ELECTRICAL CHARACTERISTICS)

All of electronic equipment should be designed that the mounted semiconductor devices operate within the recommended operating conditions. The semiconductor devices cannot operate normally over the recommended operating conditions, even if when they are used over such conditions by momentary electronic noise or surge. And the semiconductor devices may receive serious damage when they continue to operate over the recommended operating conditions.

ELECTRICAL CHARACTERISTICS

- **RP103xxxxB/D**

V_{IN}= V_{SET} + 1V (V_{OUT}>1.5V), V_{IN}=2.5V (V_{OUT}≤1.5V), I_{OUT}=1mA, C_{IN}=C_{OUT}=0.47µF, unless otherwise noted.
The specifications surrounded by ☐ are guaranteed by Design Engineering at –40°C ≤ Ta ≤ 85°C.

RP103x Series (Ta=25°C)

Symbol	Item	Conditions	MIN.	TYP.	MAX.	Unit
V_{OUT}	Output Voltage*1	Ta=25°C	V_{OUT} x0.99 (-20mV)		V_{OUT} x1.01 (20mV)	V
		-40°C ≦ Ta ≦ 85°C	V_{OUT} x0.985 (-30mV)		V_{OUT} x1.015 (30mV)	
I_{OUT}	Output Current		150			mA
ΔV_{OUT} /ΔI_{OUT}	Load Regulation	1mA ≦ I_{OUT} ≦ 150mA		10	30	mV
V_{DIF}	Dropout Voltage	Please see the data table on next page				
I_{SS}	Supply Current	I_{OUT} = 0mA		36	50	µA
Istandby	Supply Current (Standby)	V_{CE} = 0V		0.1	1.0	µA
ΔV_{OUT} /ΔV_{IN}	Line Regulation	V_{SET}+0.5V ≦ V_{IN} ≦ 5.0V		0.02	0.10	%/V
RR	Ripple Rejection	f = 1kHz, Ripple 0.2Vp-p V_{IN} = V_{SET}+1V, I_{OUT} = 30mA (In case that V_{OUT} ≦ 2.0V, V_{IN}=3V)		75		dB
V_{IN}	Input Voltage*2		1.7		5.25	V
ΔV_{OUT} /ΔTa	Output Voltage Temperature Coefficient	- 40°C ≦ Ta ≦ 85°C		±30		ppm /°C
I_{SC}	Short Current Limit	V_{OUT} = 0V		40		mA
I_{PD}	CE Pull-down Current			0.3		µA
V_{CEH}	CE Input Voltage "H"		1.1			V
V_{CEL}	CE Input Voltage "L"				0.3	V
en	Output Noise*3	BW = 10Hz to 100kHz I_{OUT} = 30mA		60		µVrms
R_{LOW}	Nch On Resistance for Auto Discharge (D Version Only)	V_{IN} = 4.0V, V_{CE} = 0V		30		Ω

All test items listed under *Electrical Characteristics* are done under the pulse load condition (Tj≈Ta=25ºC) except for Output Noise, Ripple Rejection, and Output Voltage Temperature Coefficient.

*1 When V_{OUT}≤2.0V, Output voltage accuracy is ±20mV. (When - 40°C≤Ta≤85°C, Output voltage accuracy is ±30mV)

*2 Maximum input voltage is 5.25V. If, for any reason the input voltage exceeds 5.25V, it has to be no more than 5.5V, and total operating time should be within 500 hours.

*3 Output noise is highly dependent on Set output voltage. Please contact us if this matters.

The specifications surrounded by ☐ are guaranteed by Design Engineering at −40°C ≤ Ta ≤ 85°C.

Dropout Voltage (Ta=25°C)

Set Output Voltage V_{SET} (V)	Dropout Voltage V_{DIF} (V)		
	Condition	TYP.	MAX.
1.2V ≤ V_{SET} < 1.5V	I_{OUT}=150mA	0.500	0.620
1.5V ≤ V_{SET} < 1.7V		0.380	0.470
1.7V ≤ V_{SET} < 2.0V		0.340	0.420
2.0V ≤ V_{SET} < 2.5V		0.280	0.360
2.5V ≤ V_{SET} < 2.8V		0.220	0.300
2.8V ≤ V_{SET} ≤ 3.3V		0.210	0.270

TYPICAL APPLICATION

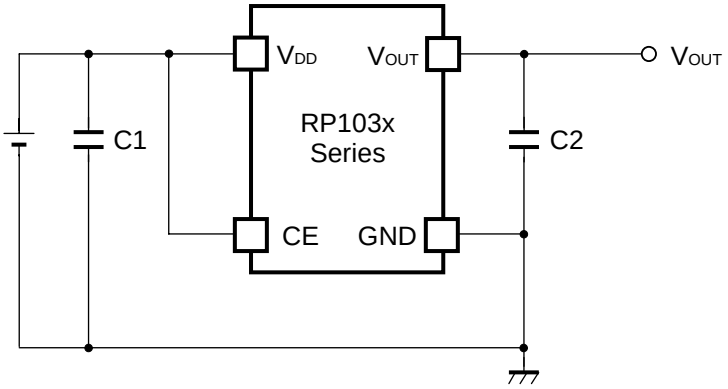

(External Components)
C2 0.47μF MURATA: GRM155B30J474KE18B

TECHNICAL NOTES

When using the RP103x Series, please consider the following points.

Phase Compensation

In these ICs, phase compensation is made for securing stable operation even if the load current is varied. For this purpose, use a capacitor C2 with good frequency characteristics and ESR (Equivalent Series Resistance). (Note: If additional ceramic capacitors are connected with parallel to the output pin with an output capacitor for phase compensation, the operation might be unstable. Because of this, test these ICs with as same external components as ones to be used on the PCB.)

PCB Layout

Make V_{DD} and GND lines sufficient. If their impedance is high, noise pickup or unstable operation may result. Connect a capacitor C1 with a capacitance value as much as 0.47μF or more between V_{DD} and GND pin, and as close as possible to the pins.

Set external components, especially the output capacitor C2, as close as possible to the ICs, and make wiring as short as possible.

PACKAGE INFORMATION

- **Power Dissipation (DFN(PL)1010-4)**

Power Dissipation (P_D) depends on conditions of mounting on board. This specification is based on the measurement at the condition below:

Measurement Conditions

	Standard Land Pattern
Environment	Mounting on Board (Wind Velocity=0m/s)
Board Material	Glass Cloth Epoxy Plastic (Double-sided)
Board Dimensions	40mm x 40mm x 1.6mm
Copper Ratio	Topside: Approx. 50%, Backside: Approx. 50%
Through-holes	ϕ 0.54mm x 24pcs

Measurement Result (Ta=25°C)

	Standard Land Pattern
Power Dissipation	400mW (Tjmax=125°C) 500mW (Tjmax=150°C)
Thermal Resistance	θja = (125-25°C)/0.4W= 250°C/W θjc = 67°C/W

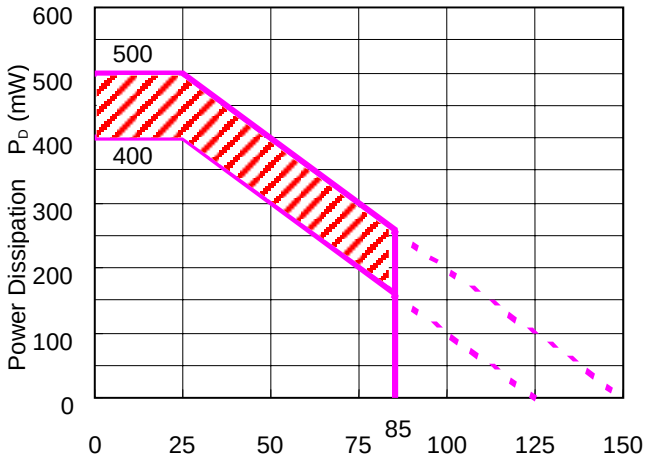

Power Dissipation

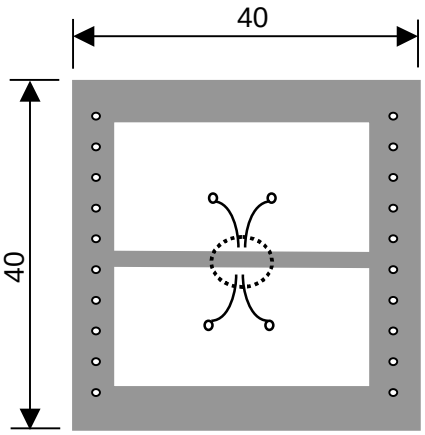

Measurement Board Pattern

IC Mount Area (Unit:mm)

The above graph shows the Power Dissipation of the package based on Tjmax=125°C and Tjmax=150°C. Operating the IC in the shaded area in the graph might have an influence it's lifetime.

Operating time must be within the time limit described in the table below, in case of operating in the shaded area.

Operating Time	**Estimated years (Operating 4 hours/day)**
13,000 hours	9 years

- **Package Dimensions (DFN(PL)1010-4)**

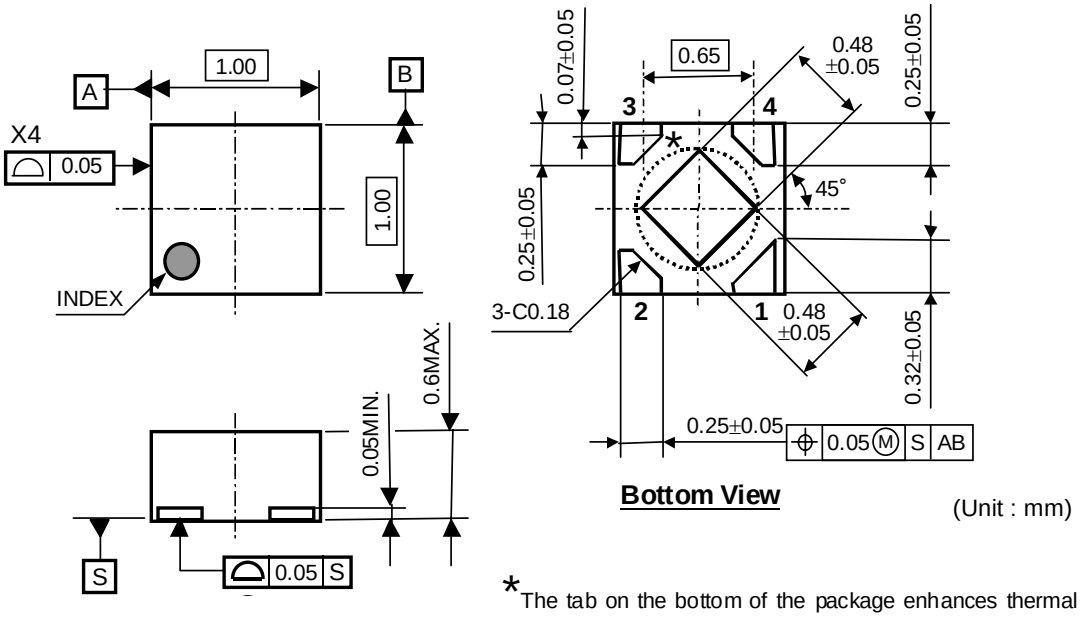

(Unit : mm)

∗The tab on the bottom of the package enhances thermal performance and is electrically connected to GND (substarate level). It is recommended that the tab be connected to the ground plane on the board. If not, the tab can be left open.

- **Mark Specification (DFN(PL)1010-4)**

①②: Product Code … Refer to **RP103Kxx1x Series Mark Specification Table.**

③④: Lot No. … Alphanumeric Serial Number

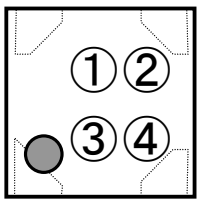

- **RP103KSeries Mark Specification Table (DFN(PL)1010-4)**

RP103Kxx1B

Part Number	①②	V_{SET}
RP103K121B	7A	1.2V
RP103K131B	7B	1.3V
RP103K141B	7Y	1.4V
RP103K151B	7C	1.5V
RP103K161B	7X	1.6V
RP103K171B	7Z	1.7V
RP103K181B	7D	1.8V
RP103K191B	7F	1.9V
RP103K201B	7G	2.0V
RP103K211B	7T	2.1V
RP103K221B	7W	2.2V
RP103K231B	7S	2.3V
RP103K241B	9A	2.4V
RP103K251B	7H	2.5V
RP103K261B	7J	2.6V
RP103K271B	7K	2.7V
RP103K281B	7L	2.8V
RP103K291B	7N	2.9V
RP103K301B	7P	3.0V
RP103K311B	7Q	3.1V
RP103K321B	7U	3.2V
RP103K331B	7R	3.3V
RP103K181B5	7E	1.85V
RP103K281B5	7M	2.85V

RP103Kxx1D

Part Number	①②	V_{SET}
RP103K121D	8A	1.2V
RP103K131D	8B	1.3V
RP103K141D	8Y	1.4V
RP103K151D	8C	1.5V
RP103K161D	8X	1.6V
RP103K171D	8Z	1.7V
RP103K181D	8D	1.8V
RP103K191D	8F	1.9V
RP103K201D	8G	2.0V
RP103K211D	8T	2.1V
RP103K221D	8W	2.2V
RP103K231D	8S	2.3V
RP103K241D	0A	2.4V
RP103K251D	8H	2.5V
RP103K261D	8J	2.6V
RP103K271D	8K	2.7V
RP103K281D	8L	2.8V
RP103K291D	8N	2.9V
RP103K301D	8P	3.0V
RP103K311D	8Q	3.1V
RP103K321D	8U	3.2V
RP103K331D	8R	3.3V
RP103K181D5	8E	1.85V
RP103K281D5	8M	2.85V

• Power Dissipation (SC-82AB)

Power Dissipation (P_D) depends on conditions of mounting on board. This specification is based on the measurement at the condition below:

Measurement Conditions

	Standard Land Pattern
Environment	Mounting on Board (Wind Velocity=0m/s)
Board Material	Glass Cloth Epoxy Plastic (Double-sided)
Board Dimensions	40mm × 40mm × 1.6mm
Copper Ratio	Topside: Approx. 50%, Backside: Approx. 50%
Through-hole	ϕ0.5mm × 44pcs

Measurement Result (Ta=25°C)

	Standard Land Pattern	**Free Air**
Power Dissipation	380mW (Tjmax=125ºC) 475mW (Tjmax=150ºC)	150mW (Tjmax=125ºC)
Thermal Resistance	θja=(125-25°C)/0.38W=263°C/W	667°C/W

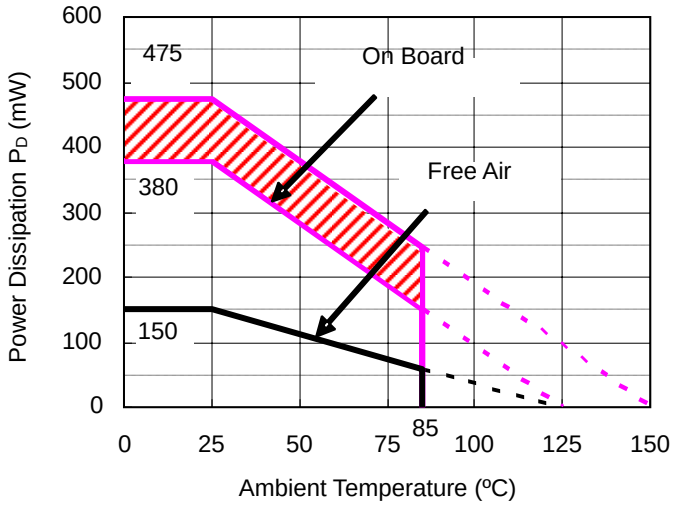

Power Dissipation

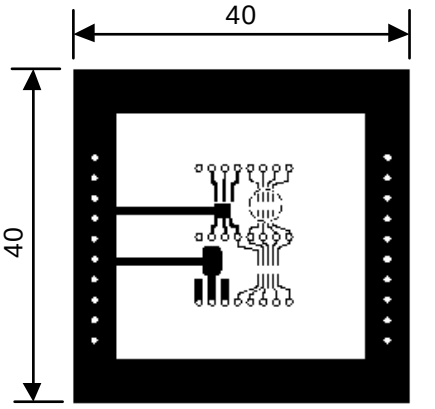

Measurement Board Pattern

IC Mount Area (Unit : mm)

The above graph shows the Power Dissipation of the package based on Tjmax=125°C and Tjmax=150°C. Operating the IC in the shaded area in the graph might have an influence it's lifetime.

Operating time must be within the time limit described in the table below, in case of operating in the shaded area.

Operating Time	**Estimated years (Operating 4 hours/day)**
13,000 hours	9 years

- **Power Dissipation (SC-82AB)**

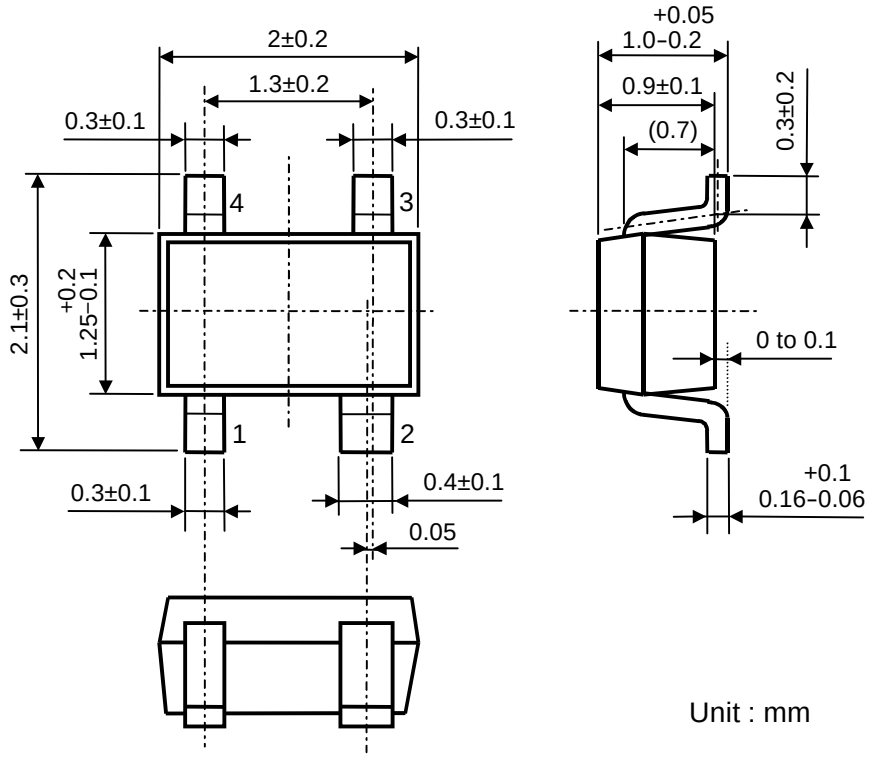

Unit : mm

- **Mark Specification (SC-82AB)**

①②: Product Code … Refer to **RP103Qxx1x Series Mark Specification Table.**

③④: Lot No. … Alphanumeric Serial Number

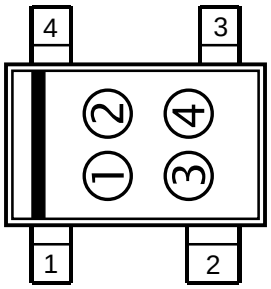

- **RP103Qxx1xSeries Mark Specification Table (SC-82AB)**

RP103Qxx1B

Part Number	①②	V_{SET}
RP103Q121B	G0	1.2V
RP103Q131B	G1	1.3V
RP103Q141B	W2	1.4V
RP103Q151B	G2	1.5V
RP103Q161B	W1	1.6V
RP103Q171B	W3	1.7V
RP103Q181B	G3	1.8V
RP103Q191B	G5	1.9V
RP103Q201B	G6	2.0V
RP103Q211B	H7	2.1V
RP103Q221B	W0	2.2V
RP103Q231B	H6	2.3V
RP103Q241B	W4	2.4V
RP103Q251B	G7	2.5V
RP103Q261B	G8	2.6V
RP103Q271B	G9	2.7V
RP103Q281B	H0	2.8V
RP103Q291B	H2	2.9V
RP103Q301B	H3	3.0V
RP103Q311B	H4	3.1V
RP103Q321B	H8	3.2V
RP103Q331B	H5	3.3V
RP103Q181B5	G4	1.85V
RP103Q281B5	H1	2.85V

RP103Qxx1D

Part Number	①②	V_{SET}
RP103Q121D	J0	1.2V
RP103Q131D	J1	1.3V
RP103Q141D	X2	1.4V
RP103Q151D	J2	1.5V
RP103Q161D	X1	1.6V
RP103Q171D	X3	1.7V
RP103Q181D	J3	1.8V
RP103Q191D	J5	1.9V
RP103Q201D	J6	2.0V
RP103Q211D	K7	2.1V
RP103Q221D	X0	2.2V
RP103Q231D	K6	2.3V
RP103Q241D	X4	2.4V
RP103Q251D	J7	2.5V
RP103Q261D	J8	2.6V
RP103Q271D	J9	2.7V
RP103Q281D	K0	2.8V
RP103Q291D	K2	2.9V
RP103Q301D	K3	3.0V
RP103Q311D	K4	3.1V
RP103Q321D	K8	3.2V
RP103Q331D	K5	3.3V
RP103Q181D5	J4	1.85V
RP103Q281D5	K1	2.85V

- **Power Dissipation (SC-88A)**

Power Dissipation (P_D) depends on conditions of mounting on board. This specification is based on the measurement at the condition below:

Measurement Conditions

	Standard Land Pattern
Environment	Mounting on Board (Wind Velocity=0m/s)
Board Material	Glass Cloth Epoxy Plastic (Double-sided)
Board Dimensions	40mm x 40mm x 1.6mm
Copper Ratio	Topside: Approx. 50%, Backside: Approx. 50%
Through-hole	ϕ0.5mm x 44pcs

Measurement Result (Ta=25°C)

	Standard Land Pattern	Free Air
Power Dissipation	304mW (Tjmax=125°C) 380mW (Tjmax=150°C)	150mW (Tjmax=150°C)
Thermal Resistance	θja=(125-25°C)/0.38W=263°C/W	θja=(125-25°C)/0.15W=667°C/W
	θjc=75°C/W	-

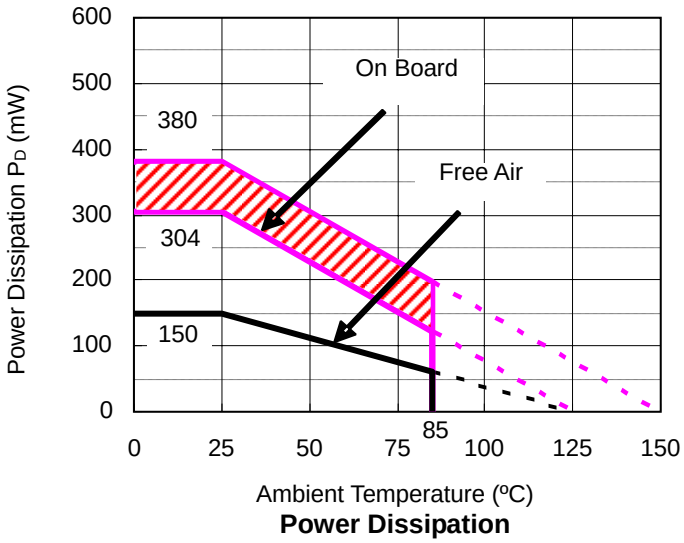

Power Dissipation

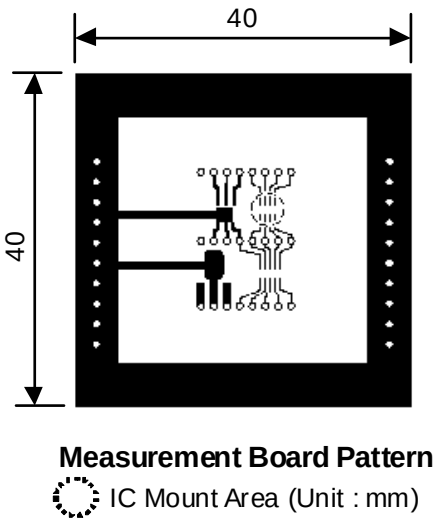

Measurement Board Pattern

IC Mount Area (Unit : mm)

The above graph shows the Power Dissipation of the package based on Tjmax=125°C and Tjmax=150°C. Operating the IC in the shaded area in the graph might have an influence it's lifetime.

Operating time must be within the time limit described in the table below, in case of operating in the shaded area.

Operating Time	Estimated years (Operating 4 hours/day)
13,000 hours	9 years

- **Power Dimensions (SC-88A)**

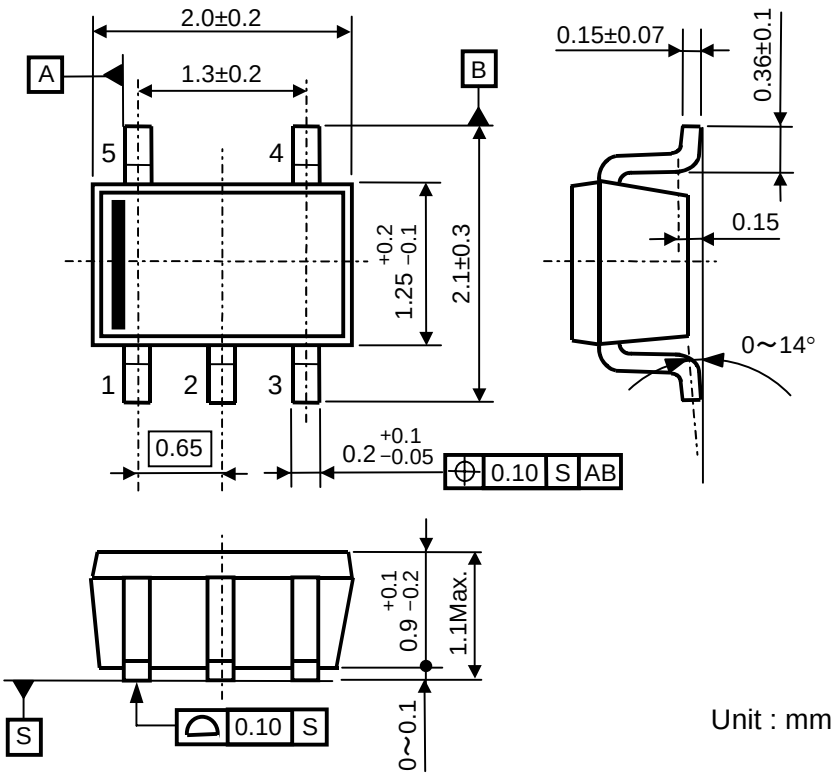

Unit : mm

- **Mark Specification (SC-88A)**

①②③④: Product Code … Refer to **RP103Qxx2x Series Mark Specification Table.**

⑤⑥: Lot No. … Alphanumeric Serial Number

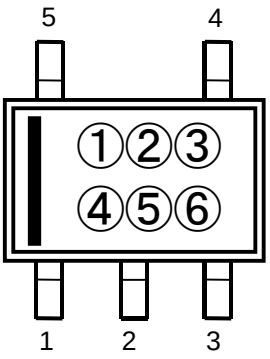

- **RP103Qxx2xSeries Mark Specification Table (SC-88A)**

RP103Qxx2B

Part Number	①②③④	V_{SET}
RP103Q122B	G001	1.2V
RP103Q132B	G002	1.3V
RP103Q142B	G023	1.4V
RP103Q152B	G003	1.5V
RP103Q162B	G022	1.6V
RP103Q172B	G024	1.7V
RP103Q182B	G004	1.8V
RP103Q192B	G006	1.9V
RP103Q202B	G007	2.0V
RP103Q212B	G008	2.1V
RP103Q222B	G021	2.2V
RP103Q232B	G009	2.3V
RP103Q242B	G025	2.4V
RP103Q252B	G010	2.5V
RP103Q262B	G011	2.6V
RP103Q272B	G012	2.7V
RP103Q282B	G013	2.8V
RP103Q292B	G015	2.9V
RP103Q302B	G016	3.0V
RP103Q312B	G017	3.1V
RP103Q322B	G018	3.2V
RP103Q332B	G019	3.3V
RP103Q182B5	G005	1.85V
RP103Q282B5	G014	2.85V

RP103Qxx2D

Part Number	①②③④	V_{SET}
RP103Q122D	H001	1.2V
RP103Q132D	H002	1.3V
RP103Q142D	H023	1.4V
RP103Q152D	H003	1.5V
RP103Q162D	H022	1.6V
RP103Q172D	H024	1.7V
RP103Q182D	H004	1.8V
RP103Q192D	H006	1.9V
RP103Q202D	H007	2.0V
RP103Q212D	H008	2.1V
RP103Q222D	H021	2.2V
RP103Q232D	H009	2.3V
RP103Q242D	H025	2.4V
RP103Q252D	H010	2.5V
RP103Q262D	H011	2.6V
RP103Q272D	H012	2.7V
RP103Q282D	H013	2.8V
RP103Q292D	H015	2.9V
RP103Q302D	H016	3.0V
RP103Q312D	H017	3.1V
RP103Q322D	H018	3.2V
RP103Q332D	H019	3.3V
RP103Q182D5	H005	1.85V
RP103Q282D5	H014	2.85V

● Power Dissipation (SOT-23-5)

Power Dissipation (P_D) depends on conditions of mounting on board. This specification is based on the measurement at the condition below. (Power Dissipation (SOT-23-5) is substitution of SOT-23-6.)

Measurement Conditions

	Standard Land Pattern
Environment	Mounting on Board (Wind Velocity=0m/s)
Board Material	Glass Cloth Epoxy Plastic (Double-sided)
Board Dimensions	40mm x 40mm x 1.6mm
Copper Ratio	Topside: Approx. 50%, Backside: Approx. 50%
Through-holes	ϕ 0.5mm x 44pcs

Measurement Result (Ta=25°C)

	Standard Land Pattern	**Free Air**
Power Dissipation	420mW (Tjmax=125°C) 525mW (Tjmax=150°C)	250mW (Tjmax=125°C)
Thermal Resistance	θja = (125-25°C)/0.42W= 238°C/W	400°C/W

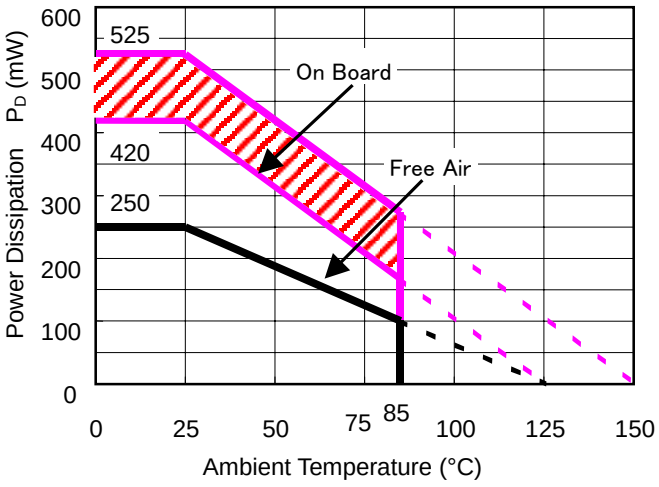

Power Dissipation

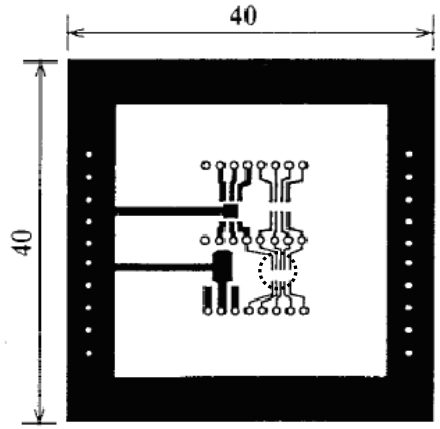

Measurement Board Pattern

IC Mount Area (Unit: mm)

The above graph shows the Power Dissipation of the package based on Tjmax=125°C and Tjmax=150°C. Operating the IC in the shaded area in the graph might have an influence it's lifetime.

Operating time must be within the time limit described in the table below, in case of operating in the shaded area.

Operating Time	**Estimated years (Operating 4 hours/day)**
9,000 hours	6 years

- **Power Dimensions (SOT-23-5)**

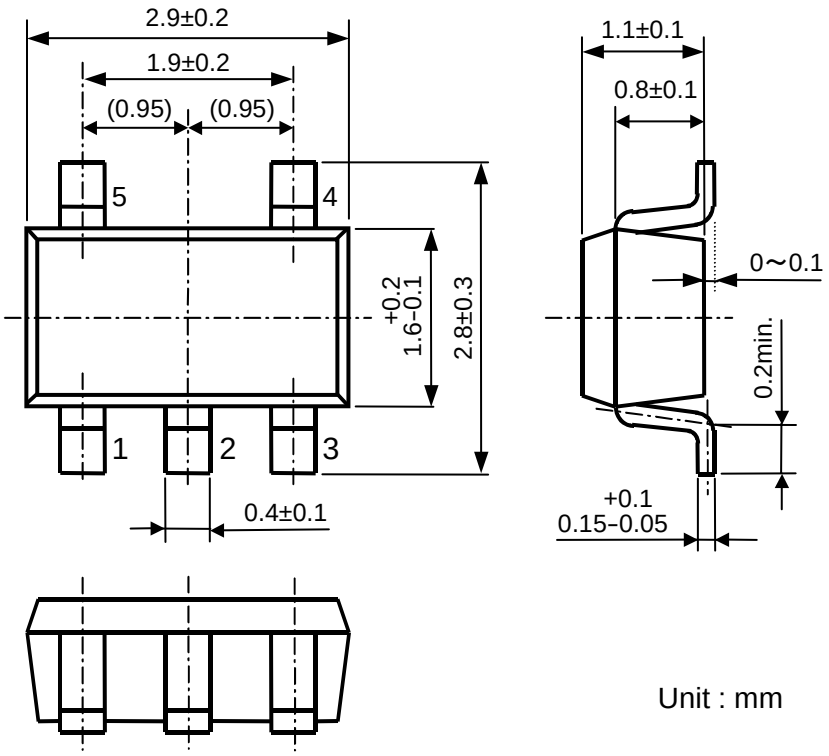

Unit : mm

- **Mark Specification (SOT-23-5)**

①②③: Product Code ... Refer to **RP103Nxx1x Series Mark Specification Table.**

④⑤: Lot No. … Alphanumeric Serial Number

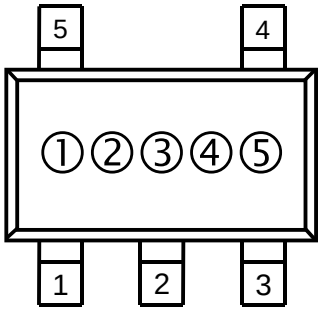

- **RP103Nxx1xSeries Mark Specification Table (SOT-23-5)**

RP103Nxx1B

Part Number	①②③	V_{SET}
RP103N121B	80A	1.2V
RP103N131B	80B	1.3V
RP103N141B	80Y	1.4V
RP103N151B	80C	1.5V
RP103N161B	80X	1.6V
RP103N171B	80Z	1.7V
RP103N181B	80D	1.8V
RP103N191B	80F	1.9V
RP103N201B	80G	2.0V
RP103N211B	80T	2.1V
RP103N221B	80W	2.2V
RP103N231B	80S	2.3V
RP103N241B	82A	2.4V
RP103N251B	80H	2.5V
RP103N261B	80J	2.6V
RP103N271B	80K	2.7V
RP103N281B	80L	2.8V
RP103N291B	80N	2.9V
RP103N301B	80P	3.0V
RP103N311B	80Q	3.1V
RP103N321B	80U	3.2V
RP103N331B	80R	3.3V
RP103N181B5	80E	1.85V
RP103N281B5	80M	2.85V

RP103Nxx1D

Part Number	①②③	V_{SET}
RP103N121D	81A	1.2V
RP103N131D	81B	1.3V
RP103N141D	81Y	1.4V
RP103N151D	81C	1.5V
RP103N161D	81X	1.6V
RP103N171D	81Z	1.7V
RP103N181D	81D	1.8V
RP103N191D	81F	1.9V
RP103N201D	81G	2.0V
RP103N211D	81T	2.1V
RP103N221D	81W	2.2V
RP103N231D	81S	2.3V
RP103N241D	83A	2.4V
RP103N251D	81H	2.5V
RP103N261D	81J	2.6V
RP103N271D	81K	2.7V
RP103N281D	81L	2.8V
RP103N291D	81N	2.9V
RP103N301D	81P	3.0V
RP103N311D	81Q	3.1V
RP103N321D	81U	3.2V
RP103N331D	81R	3.3V
RP103N181D5	81E	1.85V
RP103N281D5	81M	2.85V

TEST CIRCUITS

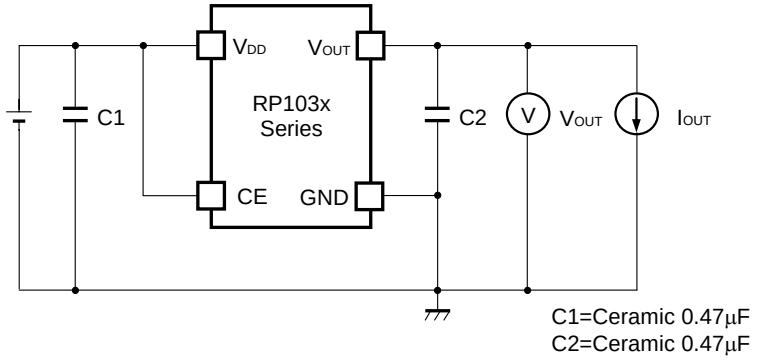

Basic Test Circuit

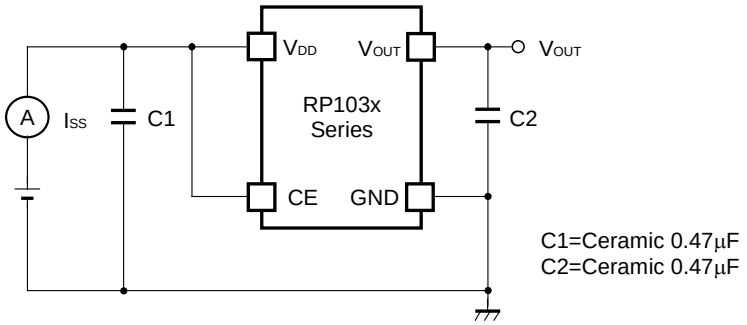

Test Circuit for Supply Current

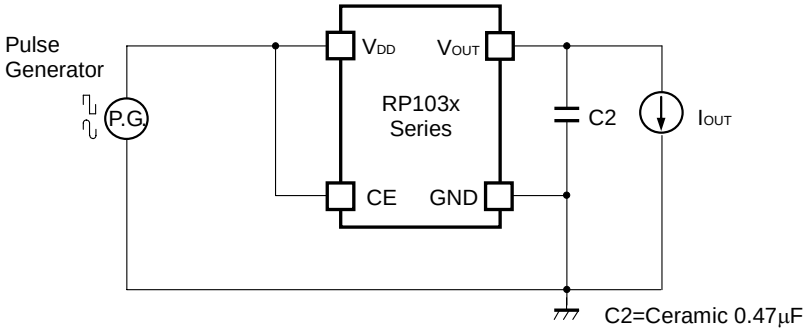

Test Circuit for Ripple Rejection

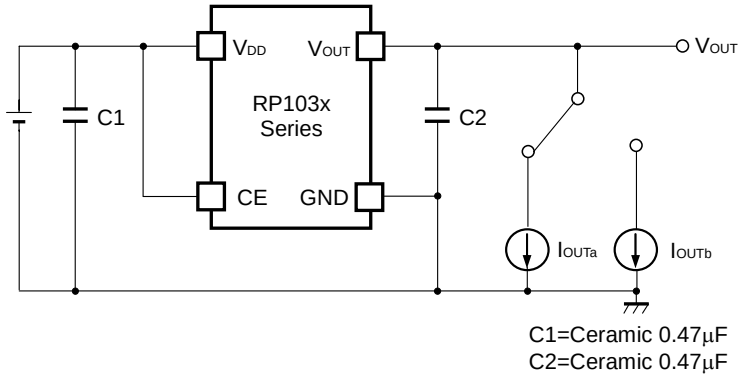

Test Circuit for Load Transient Response

TYPICAL CHARACTERISTICS

1) Output Voltage vs. Output Current (C1=0.47µF, C2=0.47µF, Ta=25°C)

RP103x12xx

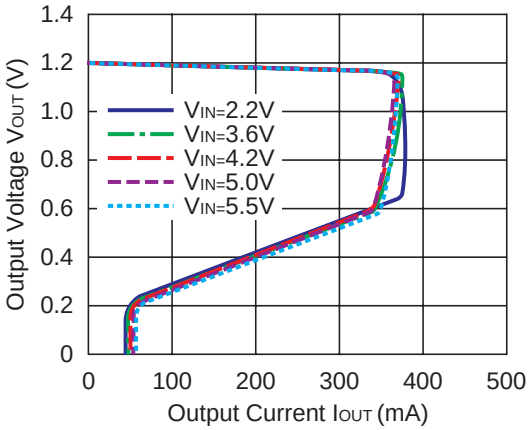

RP103x25xx

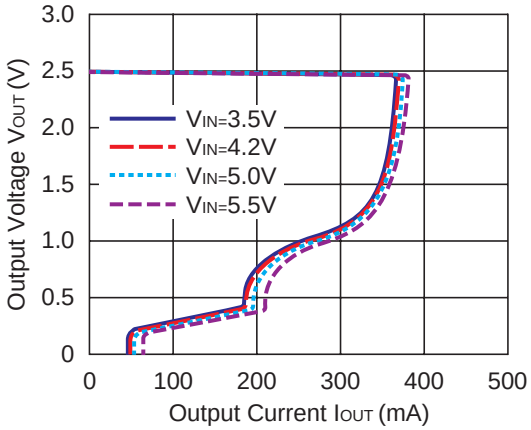

RP103x33xx

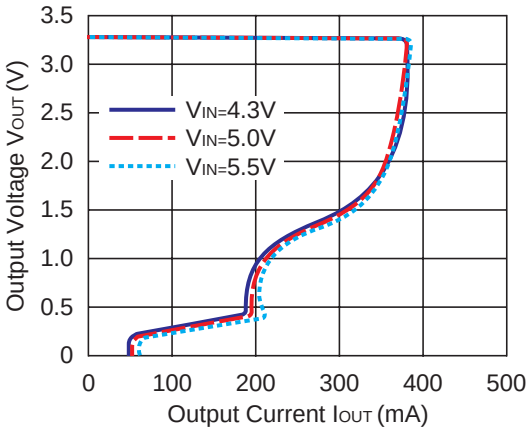

2) Output Voltage vs. Input Voltage (C1=0.47µF, C2=0.47µF, Ta=25°C)

RP103x12xx

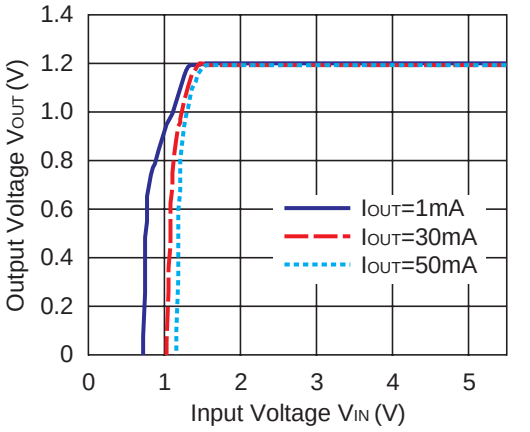

RP103x25xx

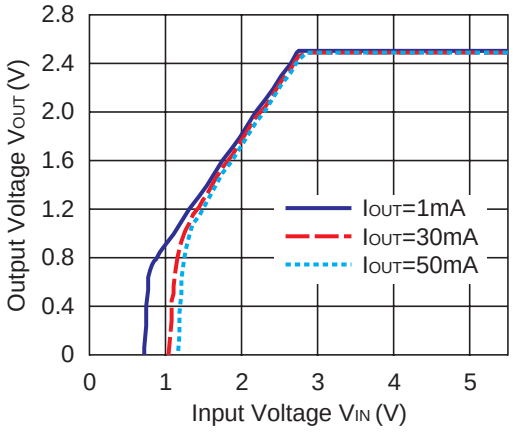

RP103x33xx

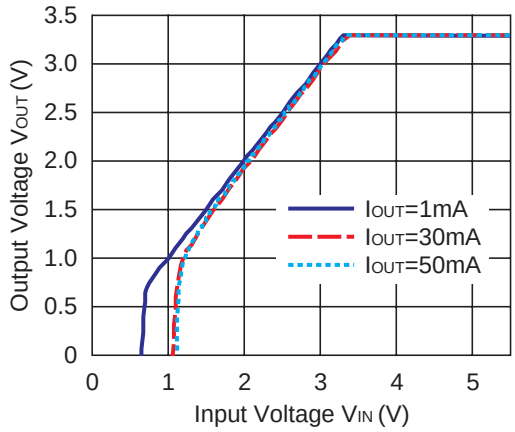

3) Supply Current vs. Input Voltage (C1=0.47µF, C2=0.47µF, Ta=25°C)

RP103x12xx

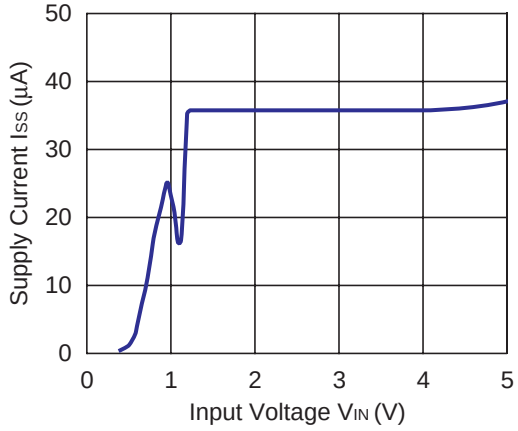

RP103x25xx

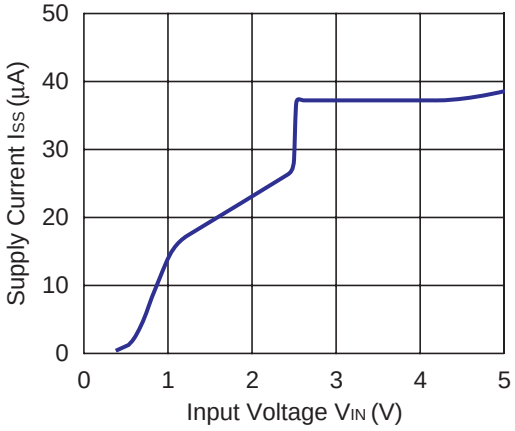

RP103x33xx

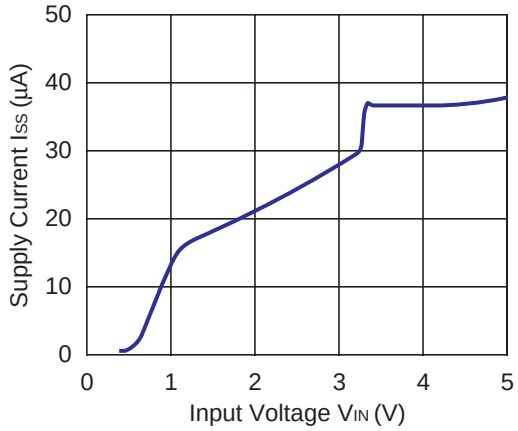

4) Output Voltage vs. Temperature (C1=0.47µF, C2=0.47µF, I_{OUT}=1mA)

RP103x12xx

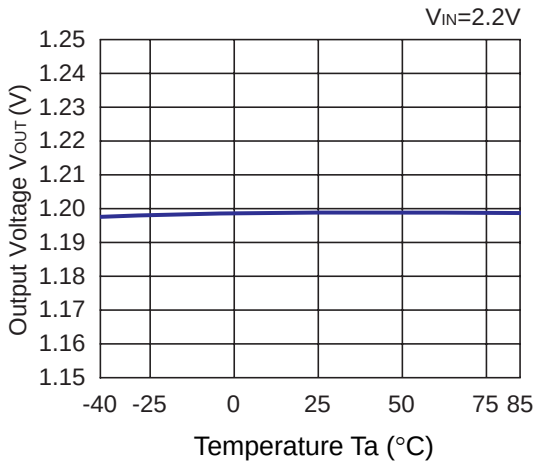

RP103x25xx

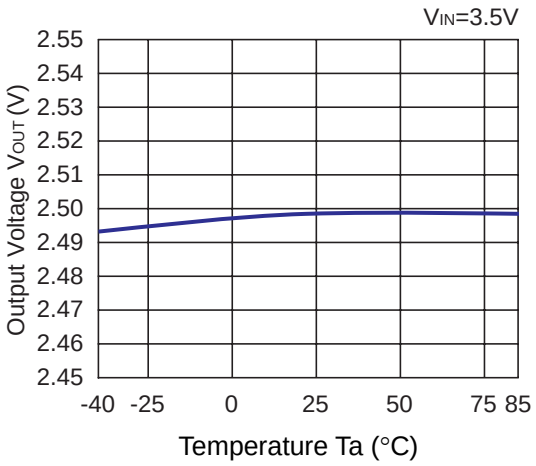

RP103x33xx

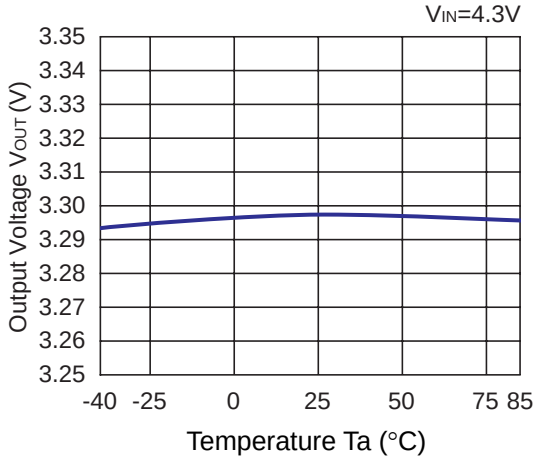

5) Supply Current vs. Temperature (C1=0.47µF, C2=0.47µF, I_{OUT}=0mA)

RP103x12xx

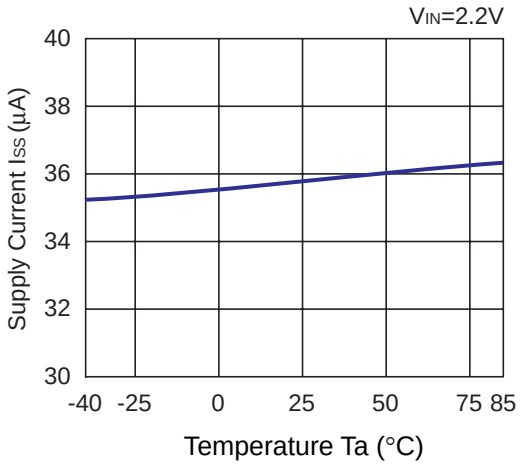

RP103x25xx

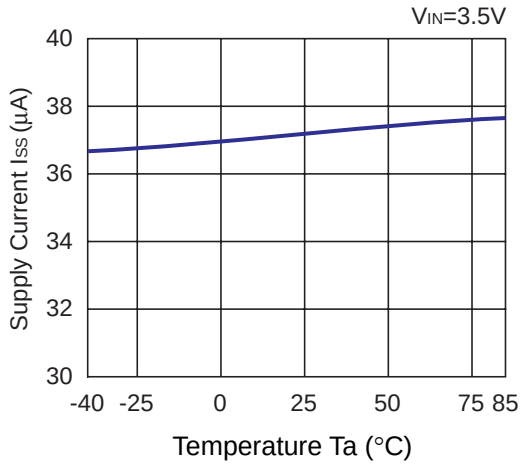

RP103x33xx

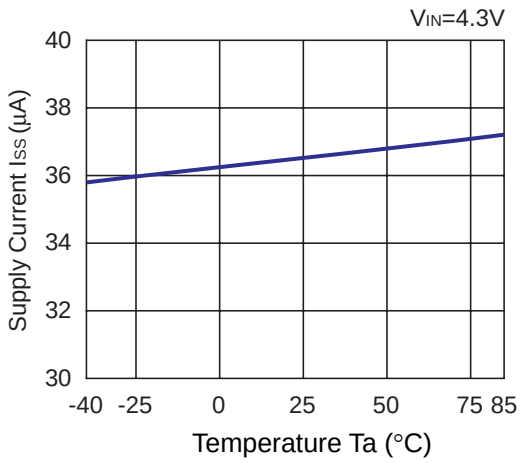

6) Dropout Voltage vs. Output Current (C1=0.47µF, C2=0.47µF)

RP103x12xx

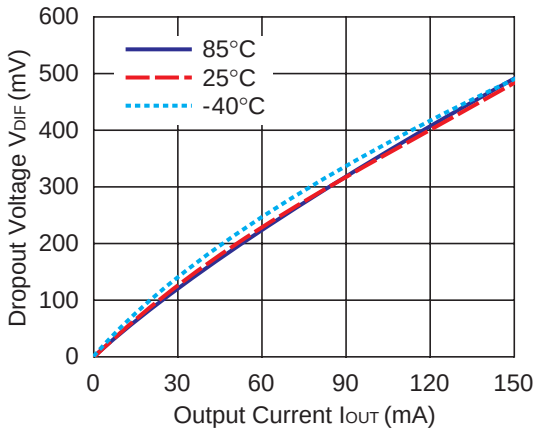

RP103x25xx

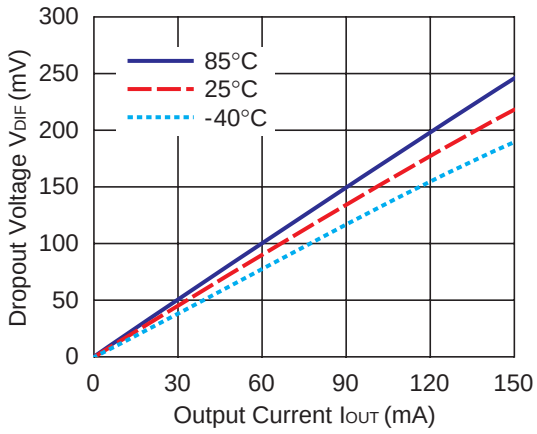

RP103x33xx

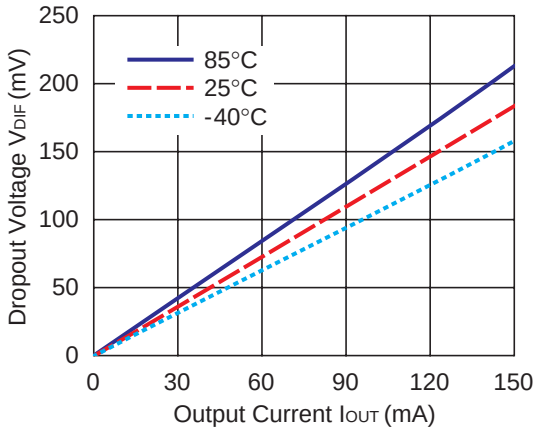

7) Dropout Voltage vs. Set Output Voltage (C1=0.47µF, C2=0.47µF, Ta=25°C)

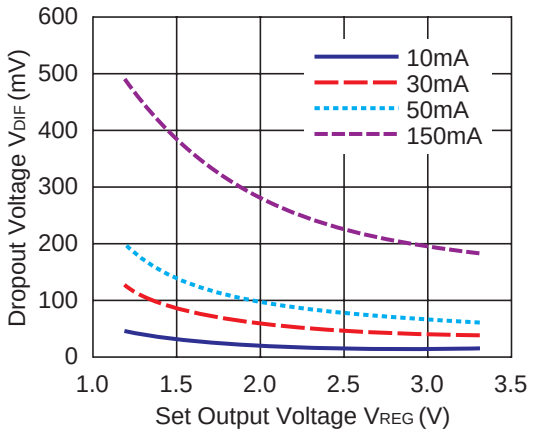

8) Ripple Rejection vs. Input Bias Voltage (C1=0.47µF, C2=0.47µF, Ripple=0.2VP-P, Ta=25°C)

RP103x28xx

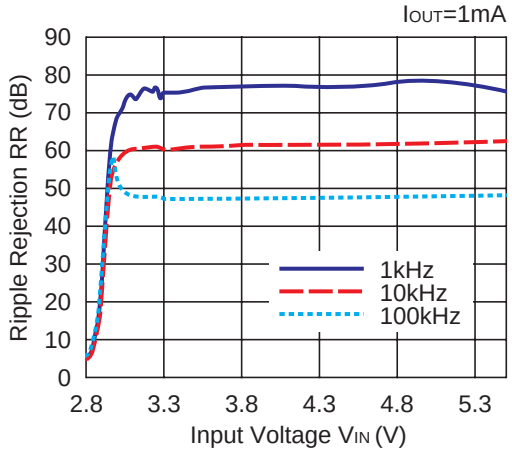

RP103x28xx

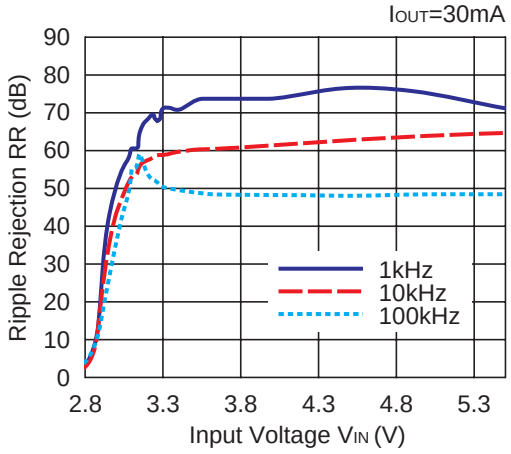

9) Ripple Rejection vs. Frequency (C1=none, C2=0.47µF, Ripple=0.2VP-P)

RP103x12xx

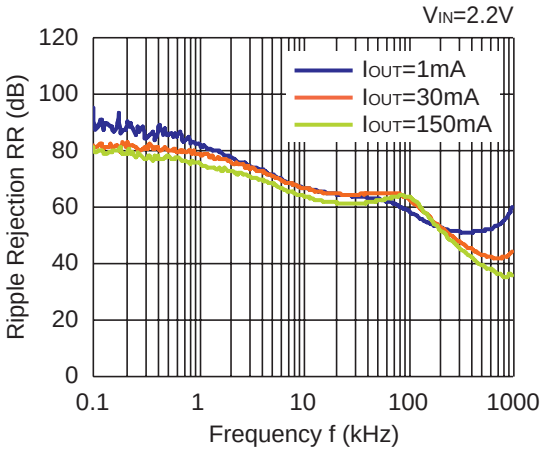

RP103x25xx

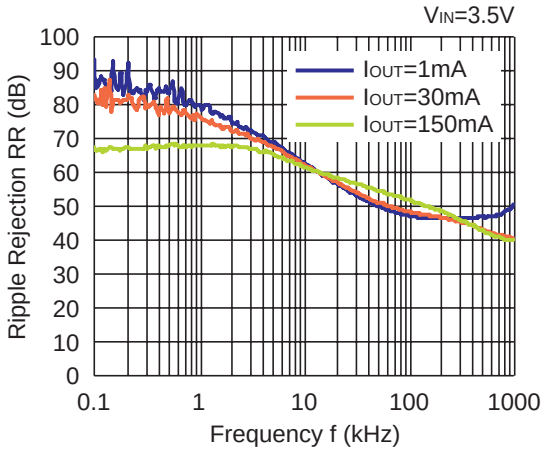

RP103x33xx

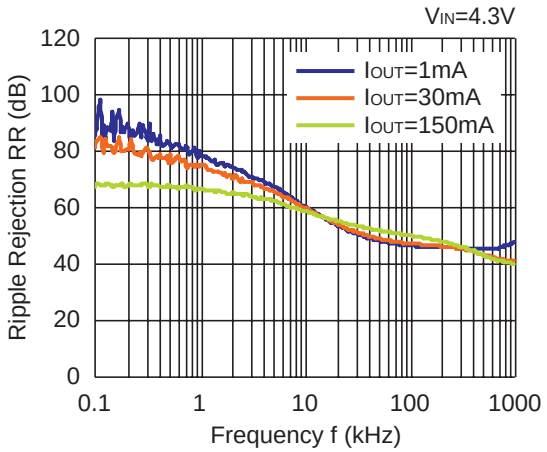

10) Input Transient Response (IOUT=30mA, tr=tf=5µs, Ta=25°C)

RP103x12xx

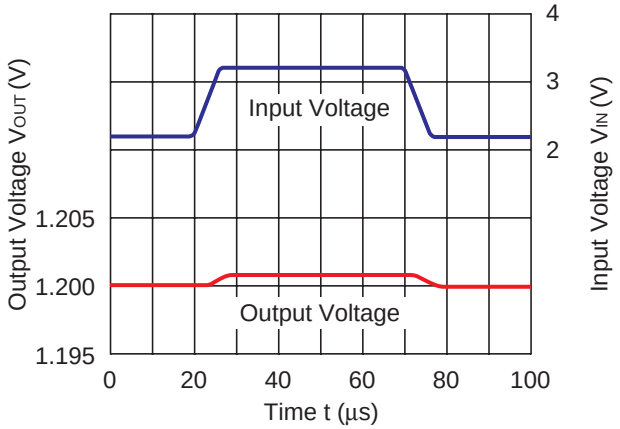

RP103x25xx

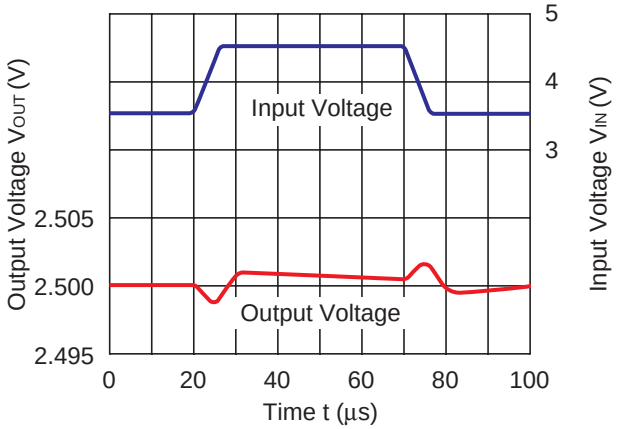

RP103x33xx

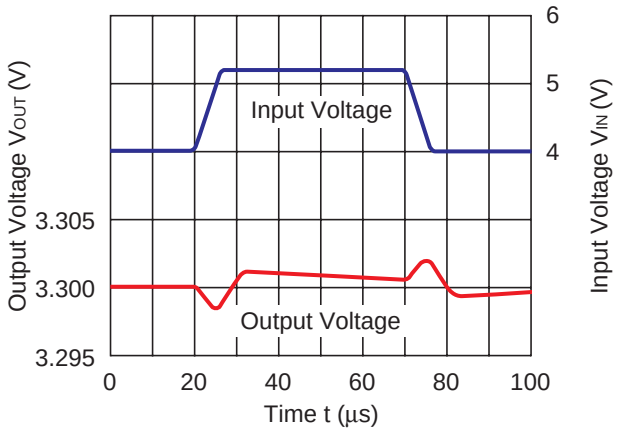

11) Load Transient Response (C1=0.47µF, C2=0.47µF, Ta=25°C)

RP103x12xx

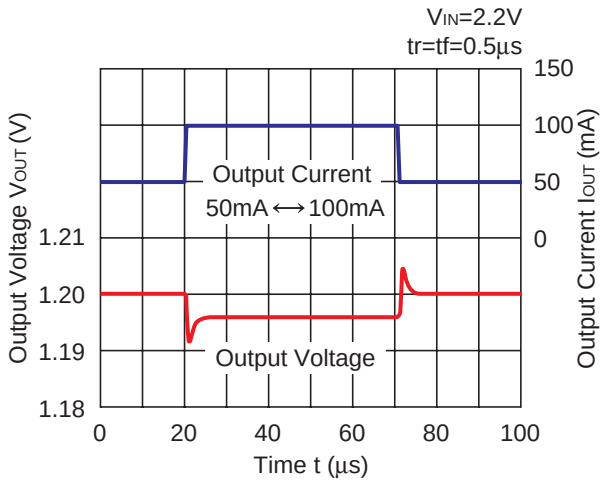

RP103x25xx

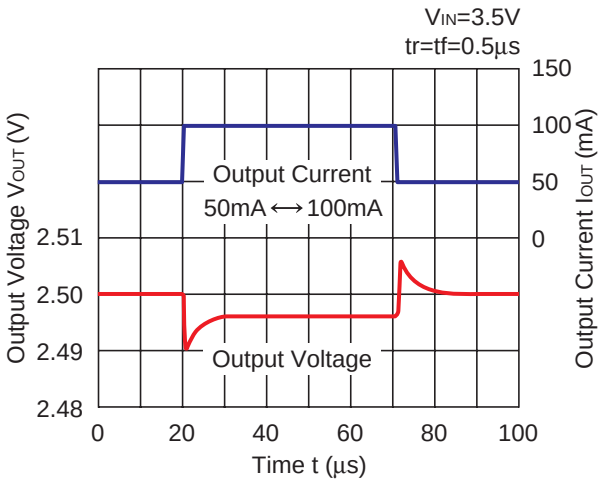

RP103x33xx

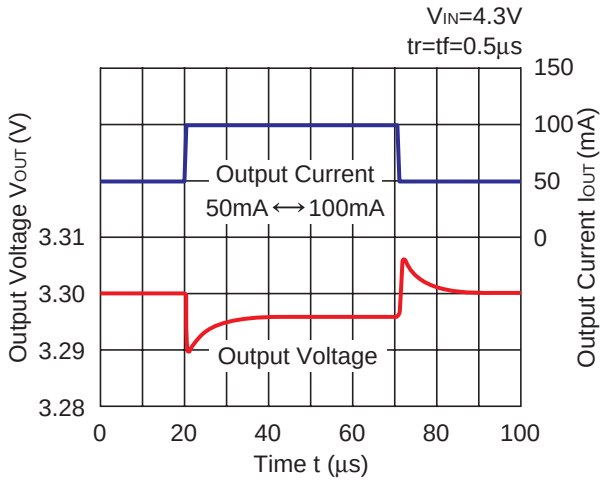

RP103x12xx

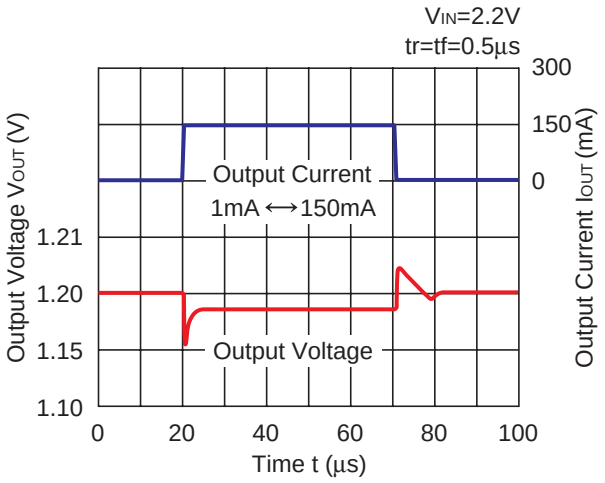

RP103x25xx

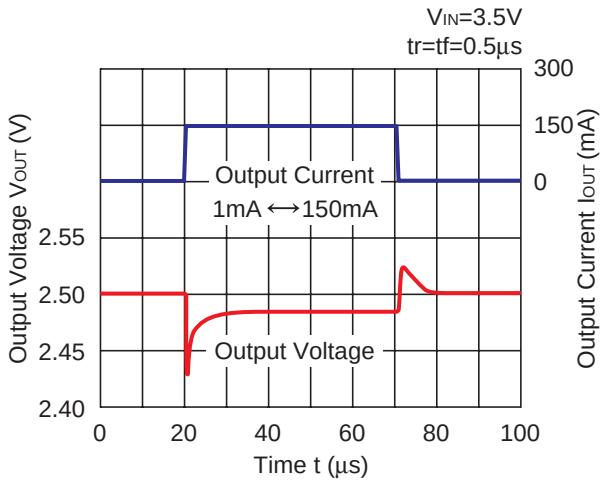

RP103x33xx

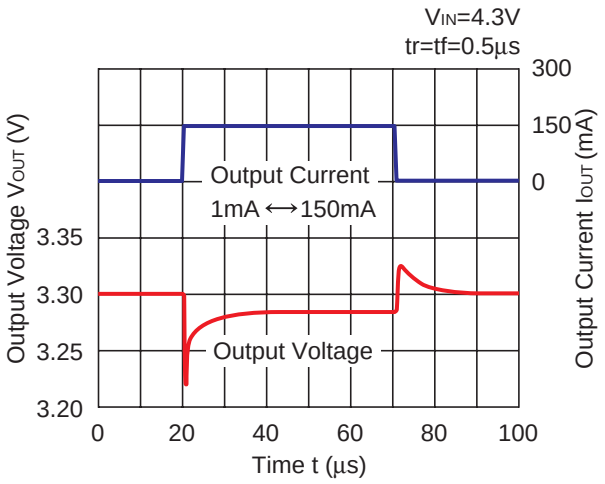

12) Turn On Speed with CE pin (C1=0.47µF, C2=0.47µF, Ta=25°C)

RP103x12xx

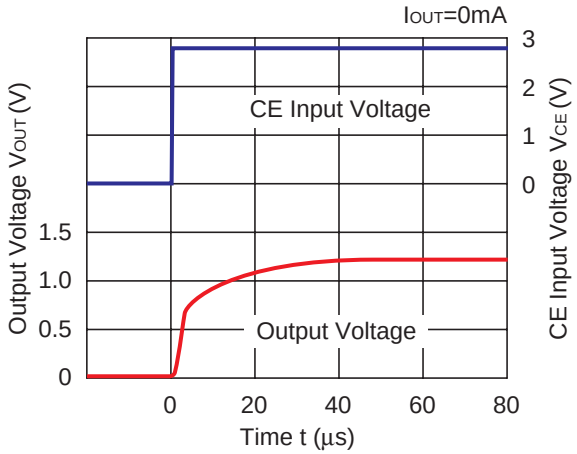

RP103x12xx

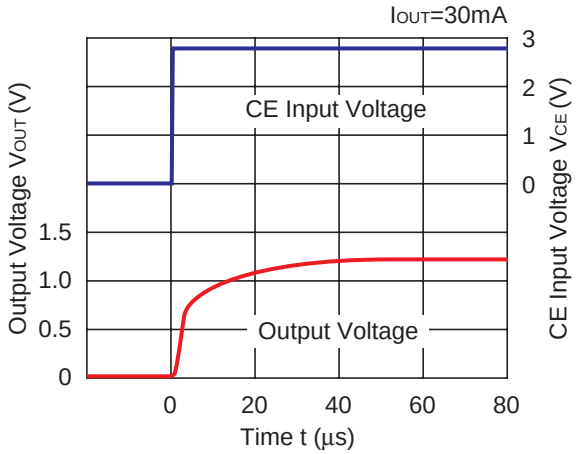

RP103x12xx

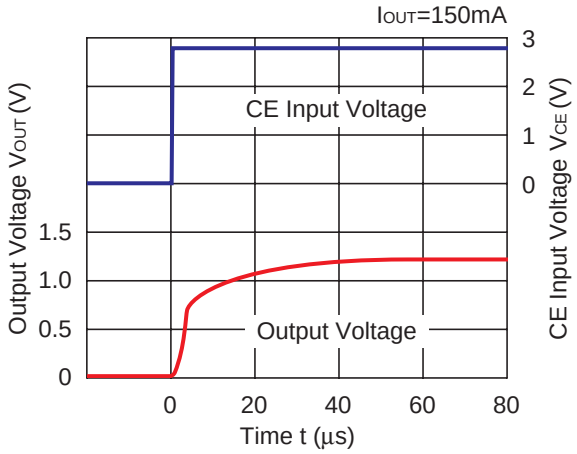

RP103x25xx

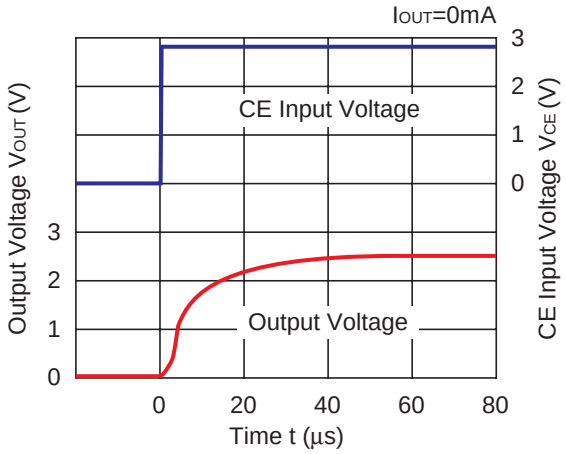

RP103x25xx

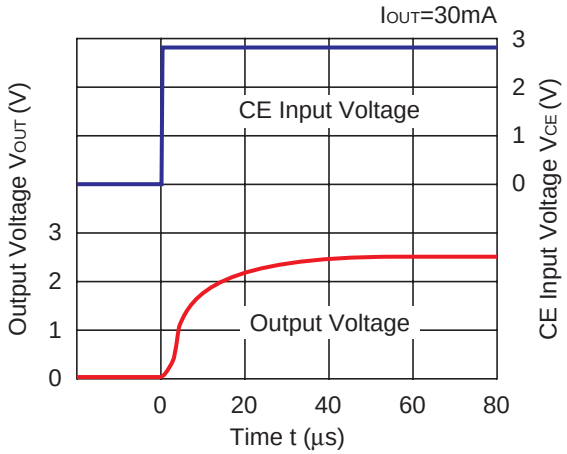

RP103x25xx

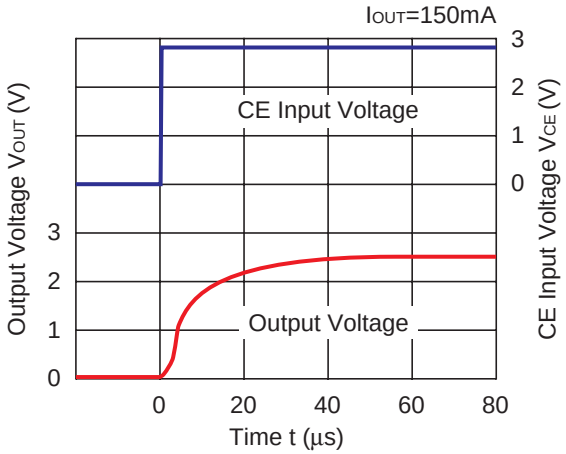

RP103x33xx

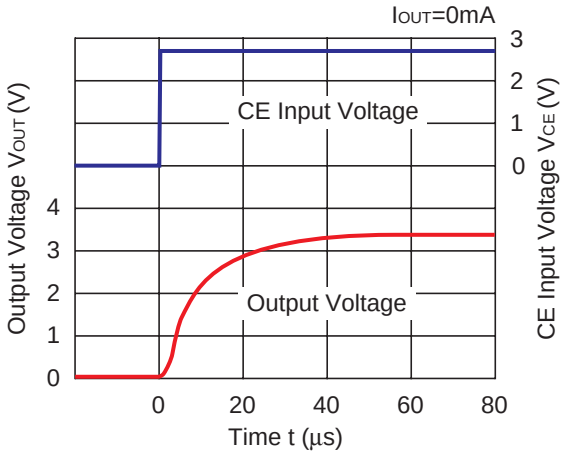

RP103x33xx

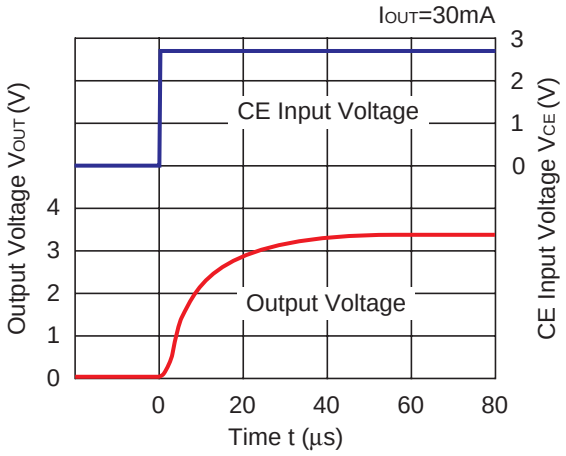

RP103x33xx

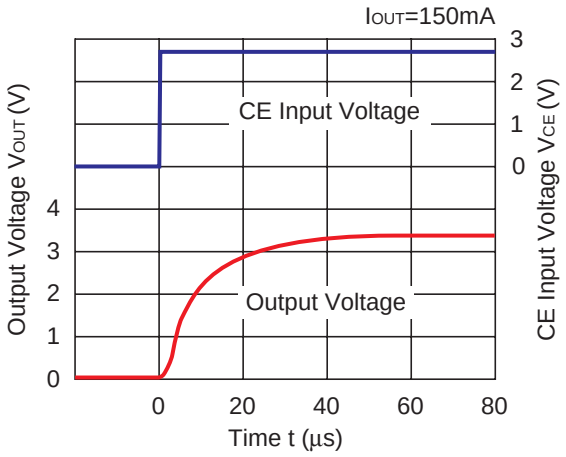

13) Turn Off Speed with CE pin (D Version) (C1=0.47µF, C2=0.47µF, Ta=25°C)

RP103x12xD

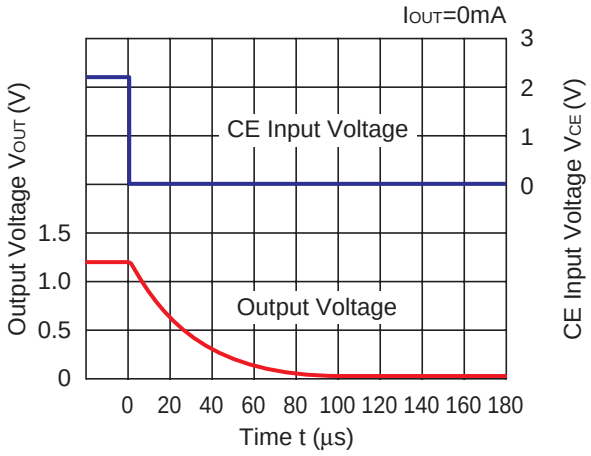

RP103x12xD

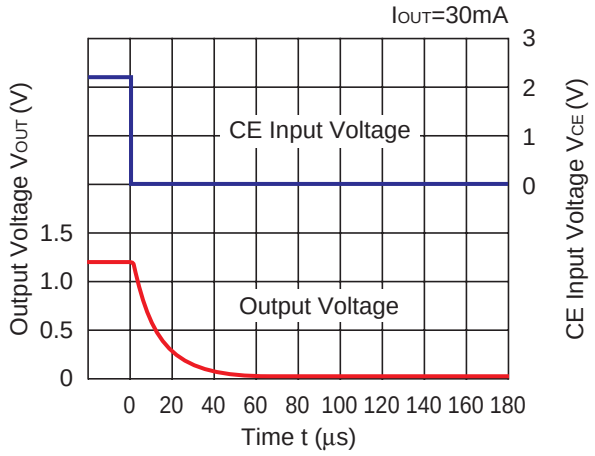

RP103x12xD

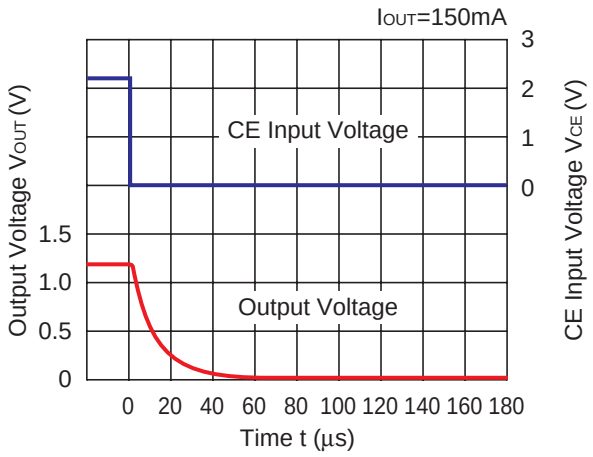

RP103x25xD

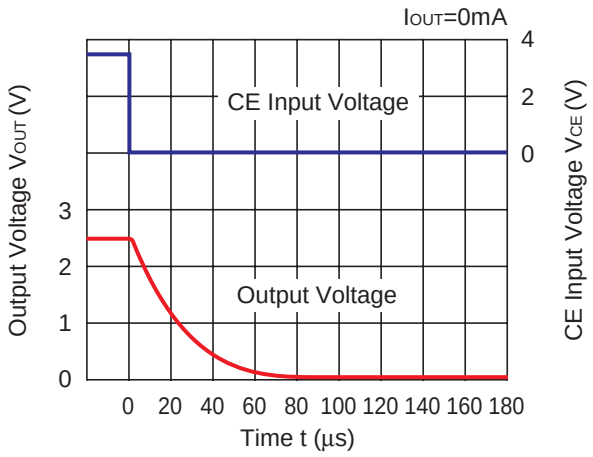

RP103x25xD

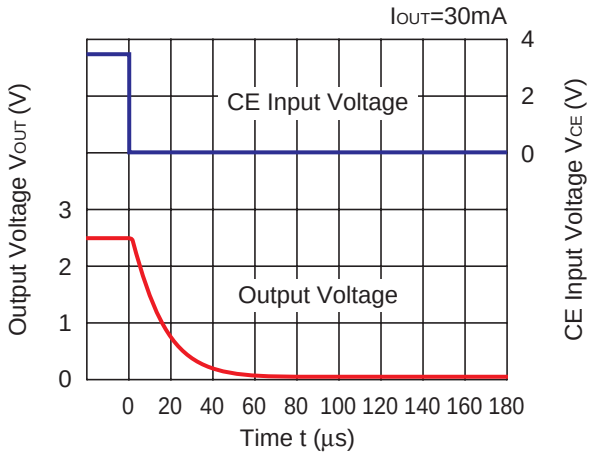

RP103x25xD

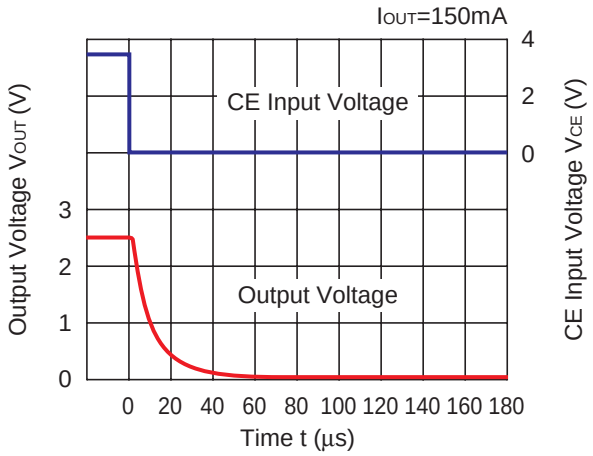

RP103x33xD

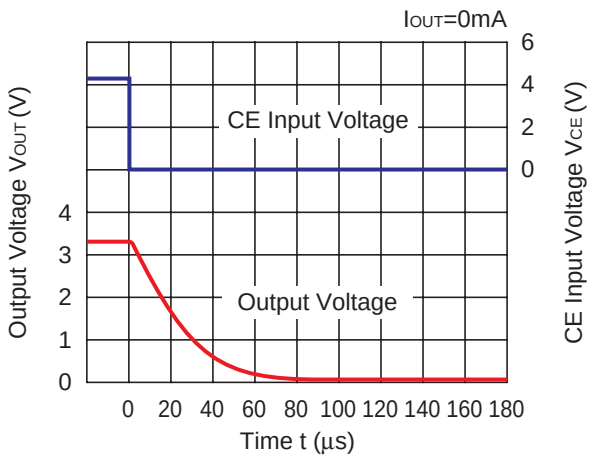

RP103x33xD

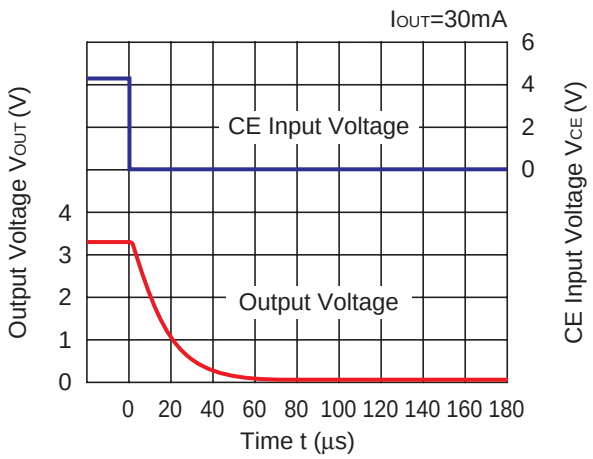

RP103x33xD

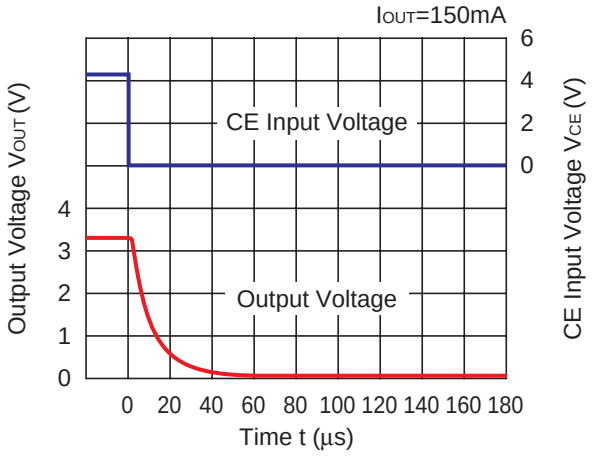

14) Dropout Voltage vs. Temperature (C1=0.47µF, C2=0.47µF)

RP103x12xx

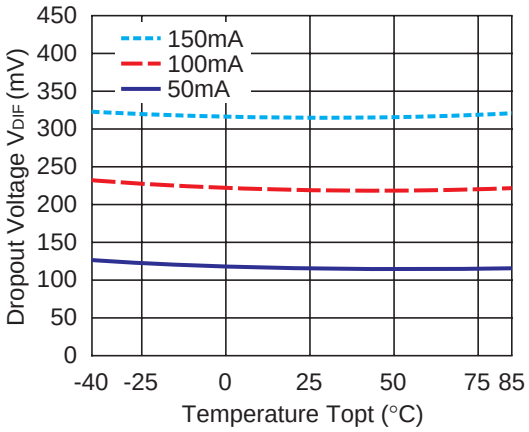

RP103x25xx

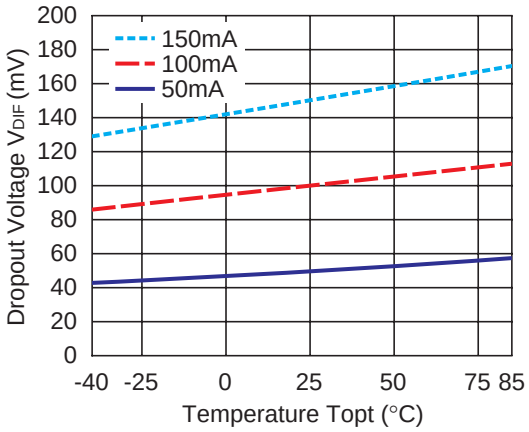

RP103x30xx

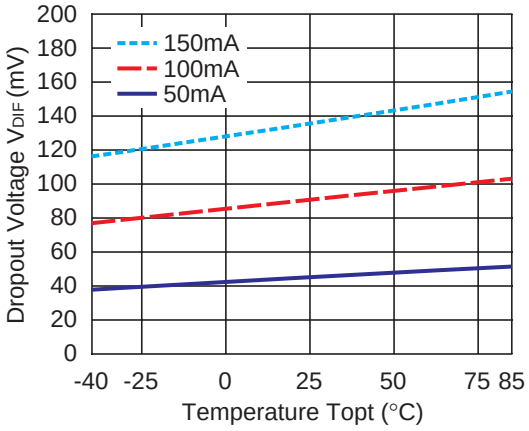

RP103x33xx

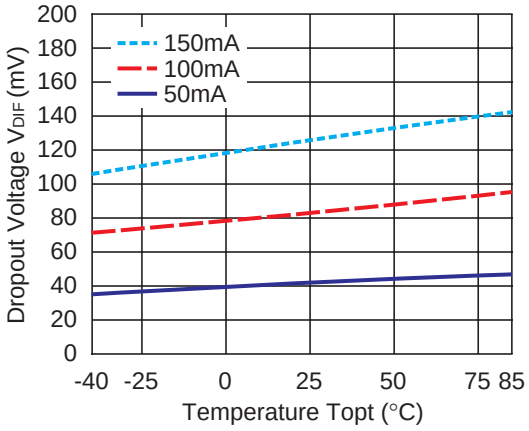

ESR vs. Output Current

Ceramic type output capacitor is recommended for this series; however, the other output capacitors with low ESR also can be used. The relations between I_{OUT} (Output Current) and ESR of an output capacitor are shown below. The conditions when the white noise level is under 40μV (Avg.) are marked as the hatched area in the graph.

Measurement conditions

Frequency Band : 10Hz to 2MHz
Temperature : –40°C to 85°C

RP103x12xx

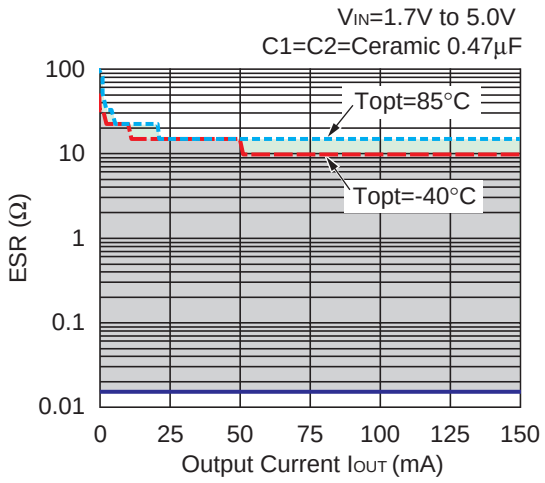

RP103x33xx

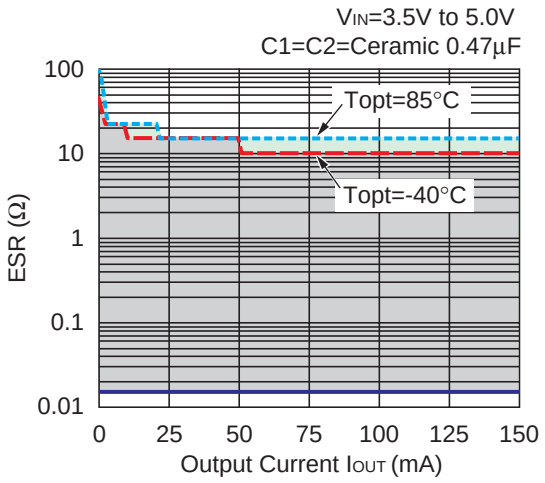

1. The products and the product specifications described in this document are subject to change or discontinuation of production without notice for reasons such as improvement. Therefore, before deciding to use the products, please refer to our sales representatives for the latest information thereon.
2. The materials in this document may not be copied or otherwise reproduced in whole or in part without prior written consent of our company.
3. Please be sure to take any necessary formalities under relevant laws or regulations before exporting or otherwise taking out of your country the products or the technical information described herein.
4. The technical information described in this document shows typical characteristics of and example application circuits for the products. The release of such information is not to be construed as a warranty of or a grant of license under our company's or any third party's intellectual property rights or any other rights.
5. The products listed in this document are intended and designed for use as general electronic components in standard applications (office equipment, telecommunication equipment, measuring instruments, consumer electronic products, amusement equipment etc.). Those customers intending to use a product in an application requiring extreme quality and reliability, for example, in a highly specific application where the failure or misoperation of the product could result in human injury or death (aircraft, spacevehicle, nuclear reactor control system, traffic control system, automotive and transportation equipment, combustion equipment, safety devices, life support system etc.) should first contact us.
6. We are making our continuous effort to improve the quality and reliability of our products, but semiconductor products are likely to fail with certain probability. In order to prevent any injury to persons or damages to property resulting from such failure, customers should be careful enough to incorporate safety measures in their design, such as redundancy feature, fire containment feature and fail-safe feature. We do not assume any liability or responsibility for any loss or damage arising from misuse or inappropriate use of the products.
7. Anti-radiation design is not implemented in the products described in this document.
8. The X-ray exposure can influence functions and characteristics of the products. Confirm the product functions and characteristics in the evaluation stage.
9. WLCSP products should be used in light shielded environments. The light exposure can influence functions and characteristics of the products under operation or storage.
10. There can be variation in the marking when different AOI (Automated Optical Inspection) equipment is used. In the case of recognizing the marking characteristic with AOI, please contact our sales or our distributor before attempting to use AOI.
11. Please contact our sales representatives should you have any questions or comments concerning the products or the technical information.

NISSHINBO

Nisshinbo Micro Devices Inc.

Official website
https://www.nisshinbo-microdevices.co.jp/en/
Purchase information
https://www.nisshinbo-microdevices.co.jp/en/buy/

ENTEGRECİ

Bu belge www.entegreci.com üzerinden sunulmaktadır.

Elektronik komponent tedarikinde Entegreci

Entegreci, Eskişehir merkezli, Türkiye geneline satış yapan bir elektronik komponent mağazasıdır. Entegreler (IC), mikrodenetleyiciler, transistörler, diyotlar, pasif elemanlar, konnektörler, modüller ve geliştirme kartları tek adetten seri üretim adetlerine kadar satılır. Ürün sayfalarında güncel stok durumunu, fiyatı ve datasheet bağlantısını bulabilirsiniz.

Parça koduyla arama

Üretici parça numarasını yazın; stok ve fiyatı hemen görün.

www.entegreci.com

Ürün kategorileri

Entegreden kapasitöre tüm elektronik komponent kategorileri.

Kategorilere göz atın

Üreticiler

Aradığınız üreticinin ürünlerini tek sayfada inceleyin.

Üreticileri görün

Toplu alım ve teklif

Listede olmayan ya da yüksek adetli parçalar için teklif isteyin.

Teklif isteyin

www.entegreci.com | **destek@entegreci.com** | **0850 305 90 34**

Entegreci is an online electronic components store based in Türkiye. Search by manufacturer part number to see stock, prices and datasheets for integrated circuits, microcontrollers, transistors, passive components and connectors, or request a quote for parts that are not listed.

Bu sayfa Entegreci tarafından eklenmiştir. Belgenin önceki sayfaları asıl yayıncısına aittir ve içeriği değiştirilmemiştir; en güncel sürüm için belgenin yayıncısına başvurun.