150mA ULTRA LOW SUPPLY CURRENT LDO REGULATOR

NO.EA-150-161026

OUTLINE

The RP104x Series are CMOS-based voltage regulator ICs with high output voltage accuracy, extremely low supply current and low ON-resistance. Each of these ICs consists of a voltage reference unit, an error amplifier, resistor-net for voltage setting, a current limit circuit and a chip enable circuit.

These ICs perform with ultra low supply current (Typ.1.0μA), which prolong the battery life.

Since the packages for these ICs are DFN(PL)1010-4, SOT-23-5 and SC-82AB, therefore high density mounting of the ICs on boards is possible.

FEATURES

- Supply Current ..... Typ. 1.0μA
  (Except the current through CE pull down circuit)
- Standby Current ..... Typ. 0.1μA
- Dropout Voltage..... Typ. 0.24V (I_{OUT}=150mA, V_{OUT}=2.8V)
- Temperature-Drift Coefficient of Output Voltage ..... Typ. ±40ppm/°C
- Line Regulation ..... Typ. 0.02%/V
- Output Voltage Accuracy..... ±0.8%
- Packages..... DFN(PL)1010-4, SC-82AB, SOT-23-5
- Input Voltage Range..... 1.7V to 5.25V
- Output Voltage Range..... ..... 1.2V to 3.3V (0.1V steps)
  (For other voltages, please refer to MARK INFORMATIONS.)
- Built-in Fold Back Protection Circuit..... Typ. 40mA (Current at short mode)
- Ceramic capacitors are recommended to be used with this IC .... 0.1μF or more

APPLICATIONS

- Power source for portable communication equipment.
- Power source for electrical appliances such as cameras, VCRs and camcorders.
- Power source for battery-powered equipment.

BLOCK DIAGRAMS

RP104xxx1B

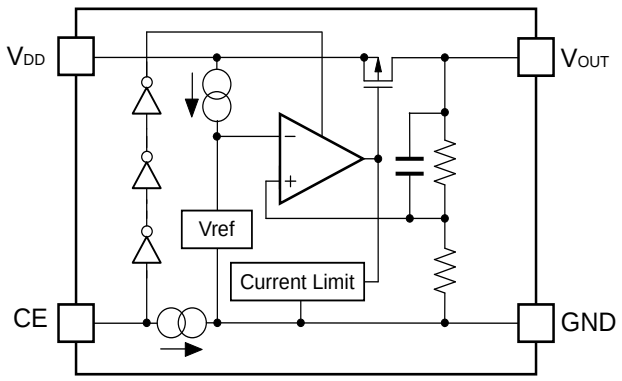

RP104xxx1C

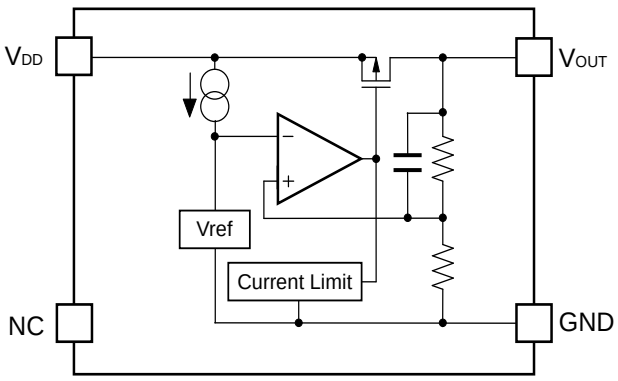

RP104xxx1D

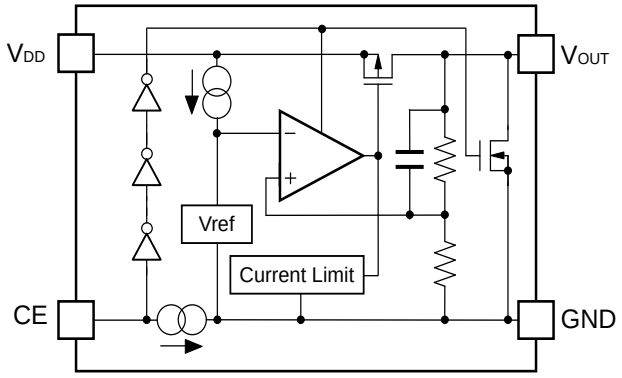

SELECTION GUIDE

The output voltage, chip enable circuit, auto discharge function, package, and the taping type, etc. for the ICs can be selected at the user's request.

Product Name	Package	Quantity per Reel	Pb Free	Halogen Free
RP104Kxx1∗-TR	DFN(PL)1010-4	10,000 pcs	Yes	Yes
RP104Qxx1∗-TR-FE	SC-82AB	3,000 pcs	Yes	Yes
RP104Nxx1∗-TR-FE	SOT-23-5	3,000 pcs	Yes	Yes

xx : Setting Output Voltage (V_{OUT}):

1.2V, 1.3V, 1.5V, 1.7V, 1.8V, 1.85V, 1.9V,
2.0V, 2.1V, 2.2V, 2.3V, 2.4V, 2.5V, 2.6V, 2.7V, 2.8V, 2.85V, 2.9V,
3.0V, 3.1V, 3.2V, 3.3V
Exception: 1.85V=RP104x181x5
2.85V=RP104x281x5

∗ : CE pin polarity and auto discharge function at off state are options as follows.
(B) "H" active, without auto discharge function at off state
(C) without chip enable circuit, and without auto discharge function at off state
(D) "H" active, with auto discharge function at off state

PIN CONFIGURATIONS

- **DFN(PL)1010-4**

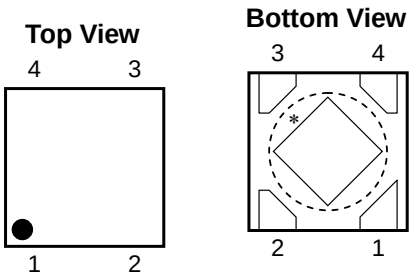

- **SC-82AB**

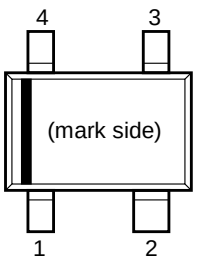

- **SOT-23-5**

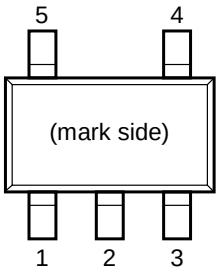

PIN DESCRIPTIONS

- **DFN(PL)1010-4**

Pin No	Symbol	Pin Description
1	V_{OUT}	Output Pin
2	GND	Ground Pin
3	CE / NC	Chip Enable Pin ("H" Active) or No Connection
4	V_{DD}	Input Pin

∗) Tab is GND level. (They are connected to the reverse side of this IC.)
The tab is better to be connected to the GND, but leaving it open is also acceptable.

- **SC-82AB**

Pin No	Symbol	Pin Description
1	CE / NC	Chip Enable Pin ("H" Active) or No Connection
2	GND	Ground Pin
3	V_{OUT}	Output Pin
4	V_{DD}	Input Pin

- **SOT-23-5**

Pin No	Symbol	Pin Description
1	V_{DD}	Input Pin
2	GND	Ground Pin
3	CE / NC	Chip Enable Pin ("H" Active) or No Connection
4	NC	No Connection
5	V_{OUT}	Output Pin

ABSOLUTE MAXIMUM RATINGS

Symbol	Item	Rating	Unit
V_{IN}	Input Voltage	6.0	V
V_{CE}	Input Voltage (CE Pin)	6.0	V
V_{OUT}	Output Voltage	−0.3 to V_{IN}+0.3	V
I_{OUT}	Output Current	200	mA
P_D	Power Dissipation (DFN(PL)1010-4)*	400	mW
	Power Dissipation (SC-82AB)*	380	
	Power Dissipation (SOT-23-5)*	420	
Topt	Operating Temperature Range	−40 to 85	°C
Tstg	Storage Temperature Range	−55 to 125	°C

∗) For Power Dissipation, please refer to PACKAGE INFORMATION.

ABSOLUTE MAXIMUM RATINGS

Electronic and mechanical stress momentarily exceeded absolute maximum ratings may cause the permanent damages and may degrade the life time and safety for both device and system using the device in the field.
The functional operation at or over these absolute maximum ratings is not assured.

ELECTRICAL CHARACTERISTICS

- **RP104xxx1B/C/D**

V_{IN}=Set V_{OUT}+1V for V_{OUT} options greater than 1.5V. V_{IN}=2.5V for V_{OUT} ≤ 1.5V.
I_{OUT}=1mA, C_{IN}=C_{OUT}=0.1μF, unless otherwise noted.
The specifications surrounded by ☐ are guaranteed by Design Engineering at –40°C ≤ Topt ≤ 85°C.

Topt=25°C

Symbol	Item	Conditions		Min.	Typ.	Max.	Unit
V_{OUT}	Output Voltage	Topt=25°C	V_{OUT} > 2.0V	×0.992		×1.008	V
			V_{OUT} ≤ 2.0V	–16		+16	mV
		–40°C ≤ Topt ≤ 85°C	V_{OUT} > 2.0V	×0.985		×1.015	V
			V_{OUT} ≤ 2.0V	–30		+30	mV
I_{OUT}	Output Current			150			mA
$\Delta V_{OUT}/\Delta I_{OUT}$	Load Regulation	1mA ≤ I_{OUT} ≤ 150mA			10	20	mV
V_{DIF}	Dropout Voltage	I_{OUT}=150mA	1.2V ≤ V_{OUT} < 1.5V		0.76	1.05	V
			1.5V ≤ V_{OUT} < 1.7V		0.53	0.80	
			1.7V ≤ V_{OUT} < 2.0V		0.44	0.65	
			2.0V ≤ V_{OUT} < 2.5V		0.34	0.50	
			2.5V ≤ V_{OUT} < 2.8V		0.28	0.40	
			2.8V ≤ V_{OUT} ≤ 3.3V		0.24	0.32	
I_{SS}	Supply Current	I_{OUT}=0mA			1.0	1.5	μA
$I_{standby}$	Standby Current	V_{CE}=0V			0.1	1.0	μA
$\Delta V_{OUT}/\Delta V_{IN}$	Line Regulation	Set V_{OUT}+0.5V ≤ V_{IN} ≤ 5.0V			0.02	0.10	%/V
V_{IN}	Input Voltage*			1.7		5.25	V
$\Delta V_{OUT}/\Delta Topt$	Output Voltage Temperature Coefficient	–40°C ≤ Topt ≤ 85°C			±40		ppm /°C
I_{SC}	Short Current Limit	V_{OUT}=0V			40		mA
I_{PD}	CE Pull-down Current				0.3		μA
V_{CEH}	CE Input Voltage "H"			1.5			V
V_{CEL}	CE Input Voltage "L"					0.3	V
R_{LOW}	Low Output Nch Tr. ON Resistance (of D version)	V_{IN}=4.0V V_{CE}=0V			30		Ω

All of units are tested and specified under load conditions such that Tj≈Topt=25°C except for Output Voltage Temperature Coefficient.
∗) When Input Voltage is 5.5V, the total operational time must be within 500hrs.

RECOMMENDED OPERATING CONDITIONS (ELECTRICAL CHARACTERISTICS)

All of electronic equipment should be designed that the mounted semiconductor devices operate within the recommended operating conditions. The semiconductor devices cannot operate normally over the recommended operating conditions, even if when they are used over such conditions by momentary electronic noise or surge. And the semiconductor devices may receive serious damage when they continue to operate over the recommended operating conditions.

TYPICAL APPLICATION

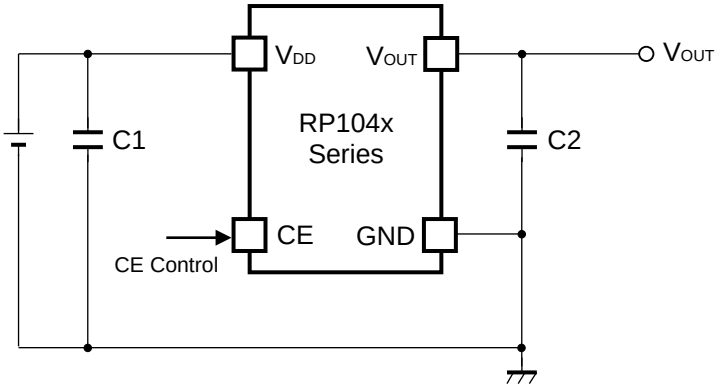

(External Components)
C2 0.1μF MURATA: GRM155B31C104KA87B

TECHNICAL NOTES

When using these ICs, consider the following points:

Phase Compensation

In these ICs, phase compensation is made for securing stable operation even if the load current is varied. For this purpose, use a capacitor C2 with good frequency characteristics and ESR (Equivalent Series Resistance). (Note: If additional ceramic capacitors are connected with parallel to the output pin with an output capacitor for phase compensation, the operation might be unstable. Because of this, test these ICs with as same external components as ones to be used on the PCB.)

PCB Layout

Make V_{DD} and GND lines sufficient. If their impedance is high, noise pickup or unstable operation may result. Connect a capacitor C1 with a capacitance value as much as 0.1μF or more between V_{DD} and GND pin, and as close as possible to the pins.

Set external components, especially the output capacitor C2, as close as possible to the ICs, and make wiring as short as possible.

PACKAGE INFORMATION

- **Power Dissipation (DFN(PL)1010-4)**

Power Dissipation (P_D) depends on conditions of mounting on board. This specification is based on the measurement at the condition below:

Measurement Conditions

	Standard Land Pattern
Environment	Mounting on Board (Wind Velocity=0m/s)
Board Material	Glass Cloth Epoxy Plastic (Double-sided)
Board Dimensions	40mm x 40mm x 1.6mm
Copper Ratio	Topside: Approx. 50%, Backside: Approx. 50%
Through-holes	ϕ 0.54mm x 24pcs

Measurement Result (Ta=25°C)

	Standard Land Pattern
Power Dissipation	400mW (Tjmax=125°C) 500mW (Tjmax=150°C)
Thermal Resistance	θja = (125-25°C)/0.4W= 250°C/W θjc = 67°C/W

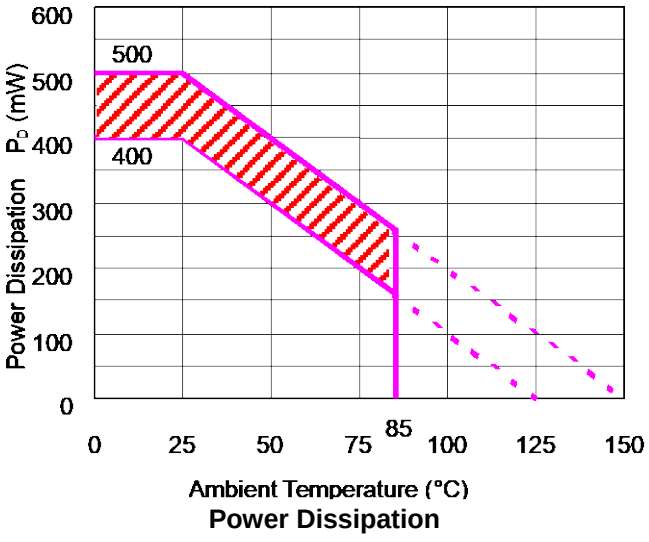

Power Dissipation

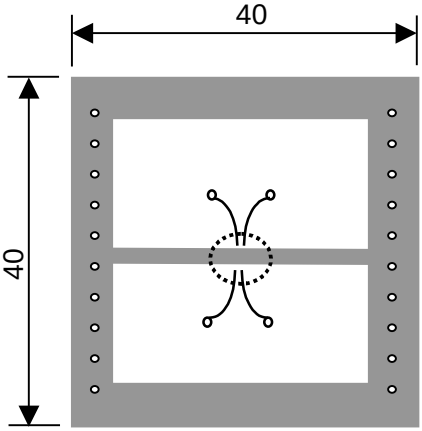

Measurement Board Pattern

IC Mount Area (Unit:mm)

The above graph shows the Power Dissipation of the package based on Tjmax=125°C and Tjmax=150°C. Operating the IC in the shaded area in the graph might have an influence it's lifetime.

Operating time must be within the time limit described in the table below, in case of operating in the shaded area.

Operating Time	**Estimated years (Operating 4 hours/day)**
13,000 hours	9 years

- **Package Dimensions (DFN(PL)1010-4)**

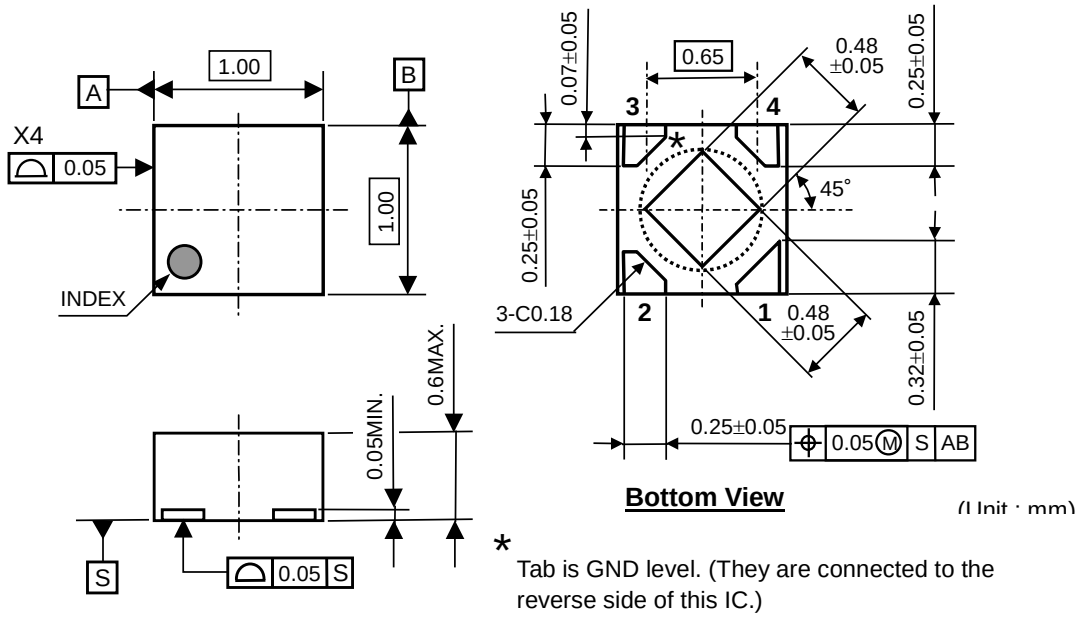

* Tab is GND level. (They are connected to the reverse side of this IC.)
The tab is better to be connected to the GND, but leaving it open is also acceptable.

- **Mark Specification (DFN(PL)1010-4)**

①②: Product Code … Refer to **RP104Kxx1x Series Mark Specification Table**

③④: Lot No. … Alphanumeric Serial Number

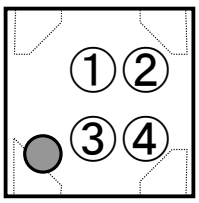

- **RP104Kxx1x Series Mark Specification Table (DFN(PL)1010-4)**

RP104Kxx1B

Product Name	①②	V_{SET}
RP104K121B	AA	1.2V
RP104K131B	AB	1.3V
RP104K151B	AC	1.5V
RP104K181B	AD	1.8V
RP104K191B	AF	1.9V
RP104K201B	AG	2.0V
RP104K211B	AX	2.1V
RP104K221B	AU	2.2V
RP104K231B	AV	2.3V
RP104K241B	AT	2.4V
RP104K251B	AH	2.5V
RP104K261B	AJ	2.6V
RP104K271B	AK	2.7V
RP104K281B	AL	2.8V
RP104K291B	AN	2.9V
RP104K301B	AP	3.0V
RP104K311B	AS	3.1V
RP104K321B	AQ	3.2V
RP104K331B	AR	3.3V
RP104K181B5	AE	1.85V
RP104K281B5	AM	2.85V
RP104K171B	AY	1.7V

RP104Kxx1C

Product Name	①②	V_{SET}
RP104K121C	BA	1.2V
RP104K131C	BB	1.3V
RP104K151C	BC	1.5V
RP104K181C	BD	1.8V
RP104K191C	BF	1.9V
RP104K201C	BG	2.0V
RP104K211C	BX	2.1V
RP104K221C	BU	2.2V
RP104K231C	BV	2.3V
RP104K241C	BT	2.4V
RP104K251C	BH	2.5V
RP104K261C	BJ	2.6V
RP104K271C	BK	2.7V
RP104K281C	BL	2.8V
RP104K291C	BN	2.9V
RP104K301C	BP	3.0V
RP104K311C	BS	3.1V
RP104K321C	BQ	3.2V
RP104K331C	BR	3.3V
RP104K181C5	BE	1.85V
RP104K281C5	BM	2.85V
RP104K171C	BY	1.7V

RP104Kxx1D

Product Name	①②	V_{SET}
RP104K121D	CA	1.2V
RP104K131D	CB	1.3V
RP104K151D	CC	1.5V
RP104K181D	CD	1.8V
RP104K191D	CF	1.9V
RP104K201D	CG	2.0V
RP104K211D	CX	2.1V
RP104K221D	CU	2.2V
RP104K231D	CV	2.3V
RP104K241D	CT	2.4V
RP104K251D	CH	2.5V
RP104K261D	CJ	2.6V
RP104K271D	CK	2.7V
RP104K281D	CL	2.8V
RP104K291D	CN	2.9V
RP104K301D	CP	3.0V
RP104K311D	CS	3.1V
RP104K321D	CQ	3.2V
RP104K331D	CR	3.3V
RP104K181D5	CE	1.85V
RP104K281D5	CM	2.85V
RP104K171D	CY	1.7V

• Power Dissipation (SC-82AB)

Power Dissipation (P_D) depends on conditions of mounting on board. This specification is based on the measurement at the condition below:

Measurement Conditions

	Standard Land Pattern
Environment	Mounting on Board (Wind Velocity=0m/s)
Board Material	Glass Cloth Epoxy Plastic (Double-sided)
Board Dimensions	40mm × 40mm × 1.6mm
Copper Ratio	Topside: Approx. 50%, Backside: Approx. 50%
Through-hole	ϕ0.5mm × 44pcs

Measurement Result (Ta=25°C)

	Standard Land Pattern	Free Air
Power Dissipation	380mW (Tjmax=125ºC) 475mW (Tjmax=150ºC)	150mW (Tjmax=125ºC)
Thermal Resistance	θja=(125-25°C)/0.38W=263°C/W	667°C/W

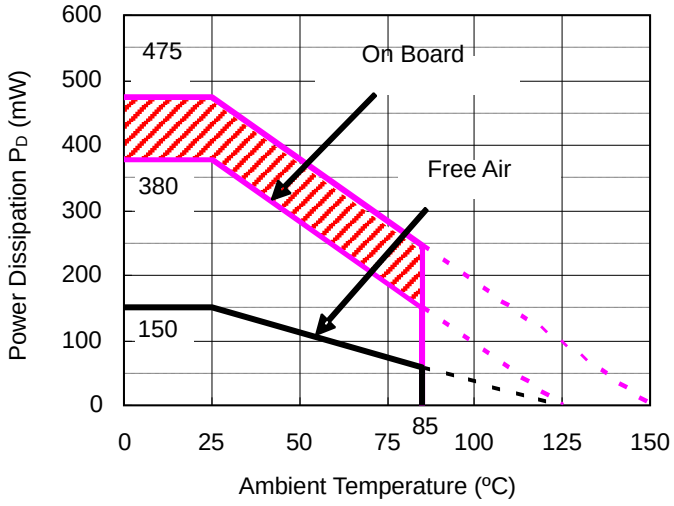

Power Dissipation

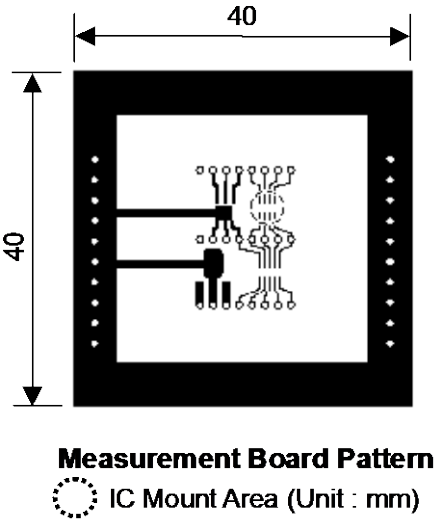

Measurement Board Pattern

IC Mount Area (Unit : mm)

The above graph shows the Power Dissipation of the package based on Tjmax=125°C and Tjmax=150°C. Operating the IC in the shaded area in the graph might have an influence it's lifetime.

Operating time must be within the time limit described in the table below, in case of operating in the shaded area.

Operating Time	Estimated years (Operating 4 hours/day)
9,000 hours	6 years

- **Package Dimensions (SC-82AB)**

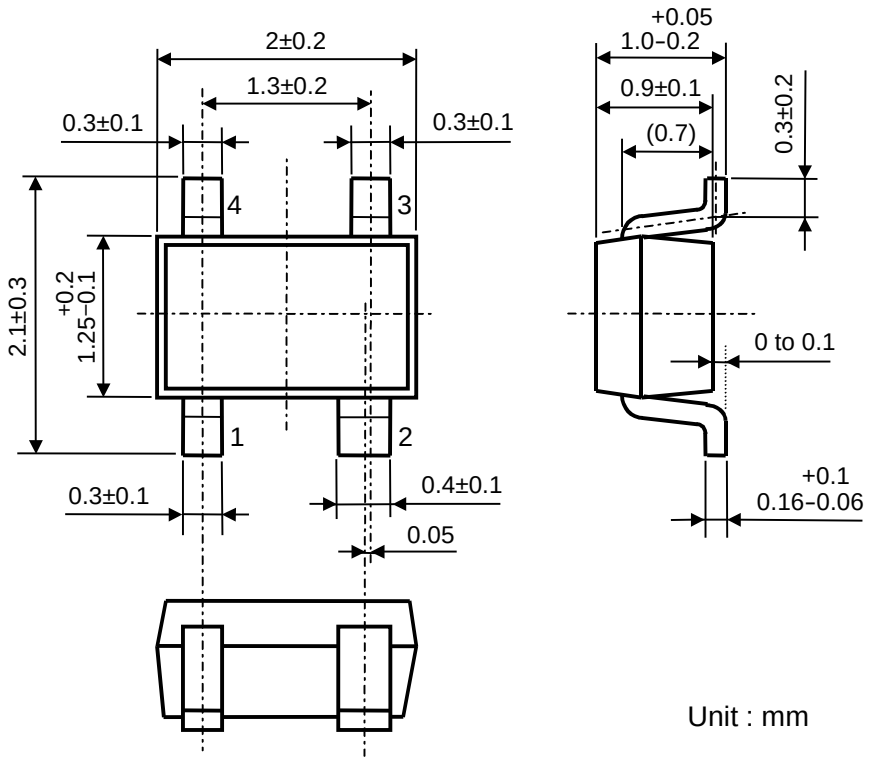

Unit : mm

- **Mark Specification (SC-82AB)**

①②: Product Code … Refer to **RP104Qxx1x Series Mark Specification Table**

③④: Lot No. … Alphanumeric Serial Number

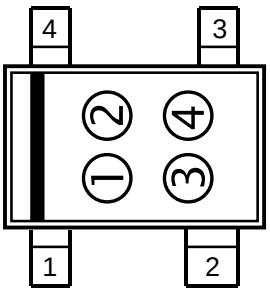

- **RP104Qxx1xSeries Mark Specification Table (SC-82AB)**

RP104Qxx1B

Product Name	①②	V_{SET}
RP104Q121B	L0	1.2V
RP104Q131B	L1	1.3V
RP104Q151B	L2	1.5V
RP104Q181B	L3	1.8V
RP104Q191B	L5	1.9V
RP104Q201B	L6	2.0V
RP104Q211B	T1	2.1V
RP104Q221B	M8	2.2V
RP104Q231B	M9	2.3V
RP104Q241B	M7	2.4V
RP104Q251B	L7	2.5V
RP104Q261B	L8	2.6V
RP104Q271B	L9	2.7V
RP104Q281B	M0	2.8V
RP104Q291B	M2	2.9V
RP104Q301B	M3	3.0V
RP104Q311B	M6	3.1V
RP104Q321B	M4	3.2V
RP104Q331B	M5	3.3V
RP104Q181B5	L4	1.85V
RP104Q281B5	M1	2.85V

RP104Qxx1C

Product Name	①②	V_{SET}
RP104Q121C	N0	1.2V
RP104Q131C	N1	1.3V
RP104Q151C	N2	1.5V
RP104Q181C	N3	1.8V
RP104Q191C	N5	1.9V
RP104Q201C	N6	2.0V
RP104Q211C	U1	2.1V
RP104Q221C	P8	2.2V
RP104Q231C	P9	2.3V
RP104Q241C	P7	2.4V
RP104Q251C	N7	2.5V
RP104Q261C	N8	2.6V
RP104Q271C	N9	2.7V
RP104Q281C	P0	2.8V
RP104Q291C	P2	2.9V
RP104Q301C	P3	3.0V
RP104Q311C	P6	3.1V
RP104Q321C	P4	3.2V
RP104Q331C	P5	3.3V
RP104Q181C5	N4	1.85V
RP104Q281C5	P1	2.85V

RP104Qxx1D

Product Name	①②	V_{SET}
RP104Q121D	R0	1.2V
RP104Q131D	R1	1.3V
RP104Q151D	R2	1.5V
RP104Q181D	R3	1.8V
RP104Q191D	R5	1.9V
RP104Q201D	R6	2.0V
RP104Q211D	V1	2.1V
RP104Q221D	S8	2.2V
RP104Q231D	S9	2.3V
RP104Q241D	S7	2.4V
RP104Q251D	R7	2.5V
RP104Q261D	R8	2.6V
RP104Q271D	R9	2.7V
RP104Q281D	S0	2.8V
RP104Q291D	S2	2.9V
RP104Q301D	S3	3.0V
RP104Q311D	S6	3.1V
RP104Q321D	S4	3.2V
RP104Q331D	S5	3.3V
RP104Q181D5	R4	1.85V
RP104Q281D5	S1	2.85V

• Power Dissipation (SOT-23-5)

Power Dissipation (P_D) depends on conditions of mounting on board. This specification is based on the measurement at the condition below. (Power Dissipation (SOT-23-5) is substitution of SOT-23-6.)

Measurement Conditions

	Standard Land Pattern
Environment	Mounting on Board (Wind Velocity=0m/s)
Board Material	Glass Cloth Epoxy Plastic (Double-sided)
Board Dimensions	40mm x 40mm x 1.6mm
Copper Ratio	Topside: Approx. 50%, Backside: Approx. 50%
Through-holes	ϕ 0.5mm x 44pcs

Measurement Result (Ta=25°C)

	Standard Land Pattern	Free Air
Power Dissipation	420mW (Tjmax=125°C) 525mW (Tjmax=150°C)	250mW (Tjmax=125°C)
Thermal Resistance	θja = (125-25°C)/0.42W= 238°C/W	400°C/W

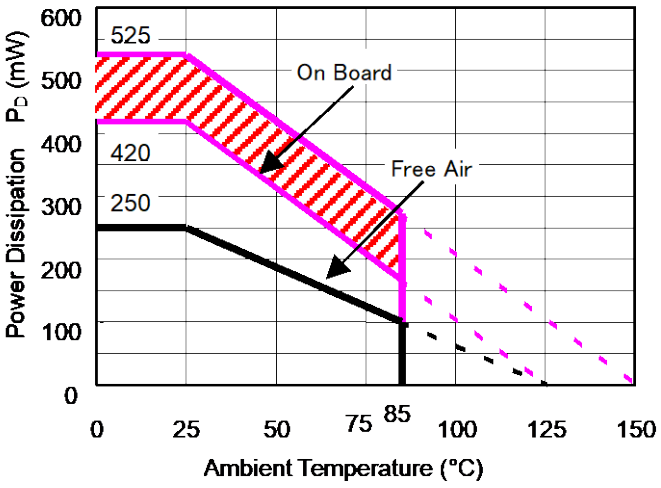

Power Dissipation

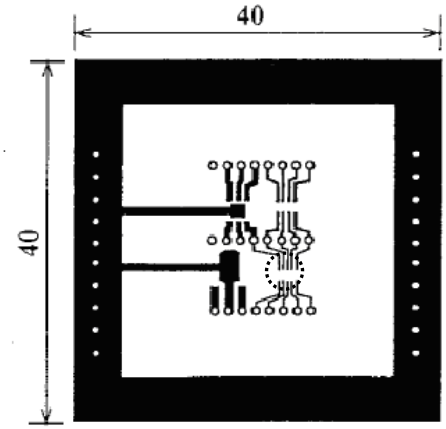

Measurement Board Pattern

IC Mount Area (Unit: mm)

The above graph shows the Power Dissipation of the package based on Tjmax=125°C and Tjmax=150°C. Operating the IC in the shaded area in the graph might have an influence it's lifetime.

Operating time must be within the time limit described in the table below, in case of operating in the shaded area.

Operating Time	Estimated years (Operating 4 hours/day)
9,000 hours	6 years

- **Package Dimensions (SOT-23-5)**

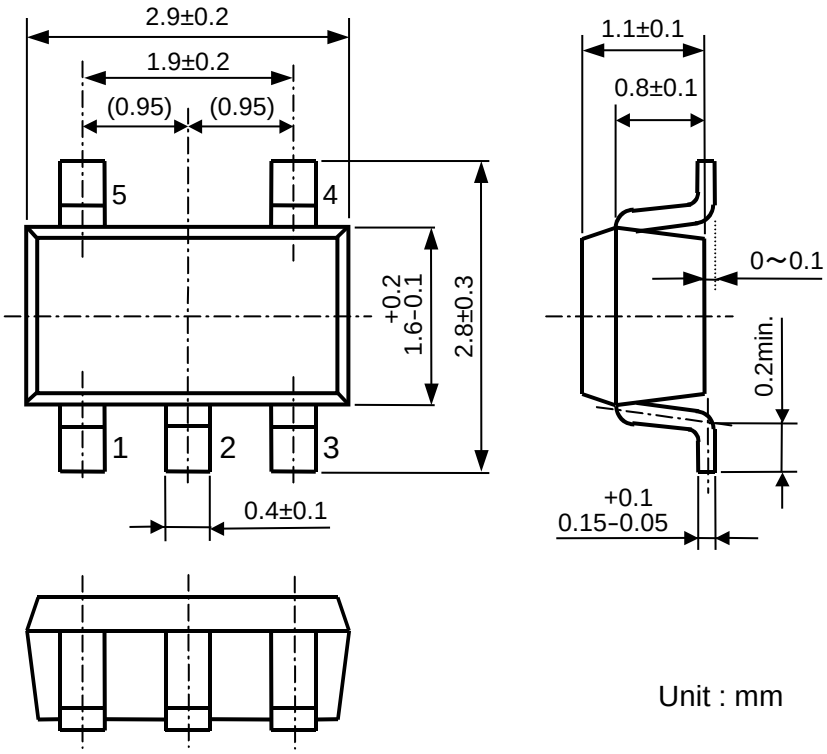

Unit : mm

- **Mark Specification (SOT-23-5)**

①②③: Product Code ... Refer to **RP104Nxx1x Series Mark Specification Table**

④⑤: Lot No. … Alphanumeric Serial Number

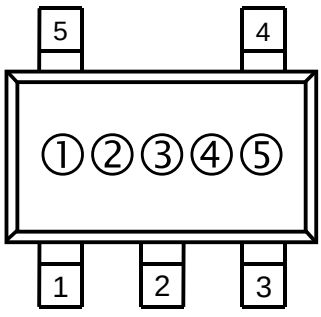

- **RP104Nxx1x Series Mark Specification Table (SOT-23-5)**

RP104Nxx1B

Product Name	①②③	V_{SET}
RP104N121B	90A	1.2V
RP104N131B	90B	1.3V
RP104N151B	90C	1.5V
RP104N181B	90D	1.8V
RP104N191B	90F	1.9V
RP104N201B	90G	2.0V
RP104N211B	90X	2.1V
RP104N221B	90U	2.2V
RP104N231B	90V	2.3V
RP104N241B	90T	2.4V
RP104N251B	90H	2.5V
RP104N261B	90J	2.6V
RP104N271B	90K	2.7V
RP104N281B	90L	2.8V
RP104N291B	90N	2.9V
RP104N301B	90P	3.0V
RP104N311B	90S	3.1V
RP104N321B	90Q	3.2V
RP104N331B	90R	3.3V
RP104N181B5	90E	1.85V
RP104N281B5	90M	2.85V
RP104N171B	90Y	1.7V

RP104Nxx1C

Product Name	①②③	V_{SET}
RP104N121C	91A	1.2V
RP104N131C	91B	1.3V
RP104N151C	91C	1.5V
RP104N181C	91D	1.8V
RP104N191C	91F	1.9V
RP104N201C	91G	2.0V
RP104N211C	91X	2.1V
RP104N221C	91U	2.2V
RP104N231C	91V	2.3V
RP104N241C	91T	2.4V
RP104N251C	91H	2.5V
RP104N261C	91J	2.6V
RP104N271C	91K	2.7V
RP104N281C	91L	2.8V
RP104N291C	91N	2.9V
RP104N301C	91P	3.0V
RP104N311C	91S	3.1V
RP104N321C	91Q	3.2V
RP104N331C	91R	3.3V
RP104N181C5	91E	1.85V
RP104N281C5	91M	2.85V
RP104N171C	91Y	1.7V

RP104Nxx1D

Product Name	①②③	V_{SET}
RP104N121D	92A	1.2V
RP104N131D	92B	1.3V
RP104N151D	92C	1.5V
RP104N181D	92D	1.8V
RP104N191D	92F	1.9V
RP104N201D	92G	2.0V
RP104N211D	92X	2.1V
RP104N221D	92U	2.2V
RP104N231D	92V	2.3V
RP104N241D	92T	2.4V
RP104N251D	92H	2.5V
RP104N261D	92J	2.6V
RP104N271D	92K	2.7V
RP104N281D	92L	2.8V
RP104N291D	92N	2.9V
RP104N301D	92P	3.0V
RP104N311D	92S	3.1V
RP104N321D	92Q	3.2V
RP104N331D	92R	3.3V
RP104N181D5	92E	1.85V
RP104N281D5	92M	2.85V
RP104N171D	92Y	1.7V

TEST CIRCUITS

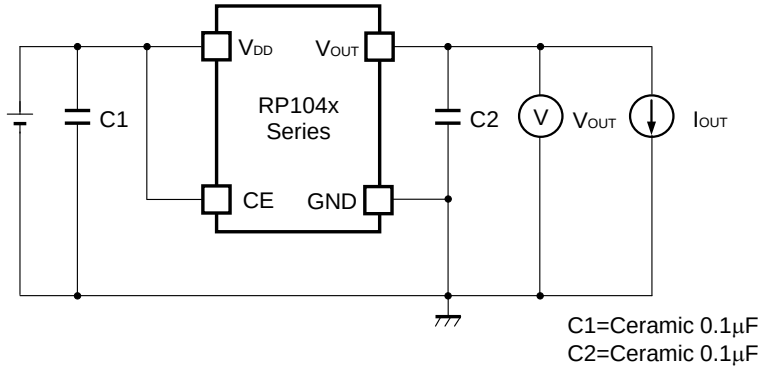

Basic Test Circuit

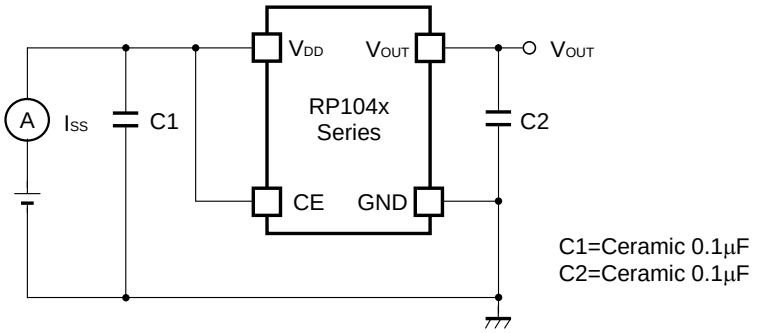

Test Circuit for Supply Current

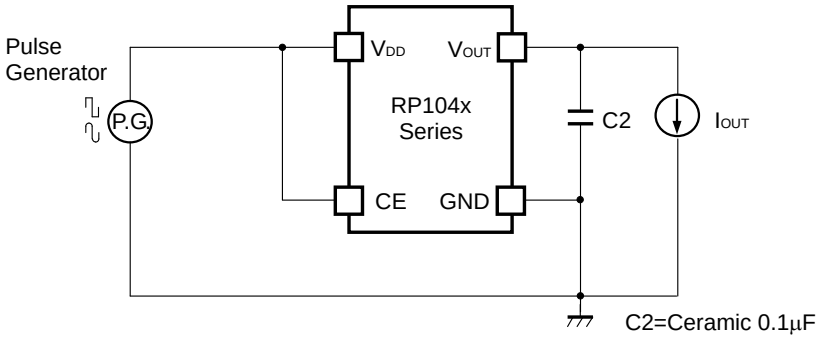

Test Circuit for Ripple Rejection

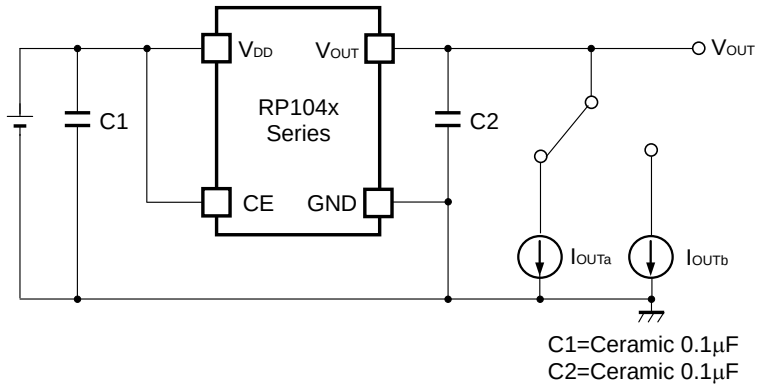

Test Circuit for Load Transient Response

TYPICAL CHARACTERISTICS

1) Output Voltage vs. Output Current (C1=Ceramic 0.1µF, C2=Ceramic 0.1µF, Topt=25°C)

RP104x121x

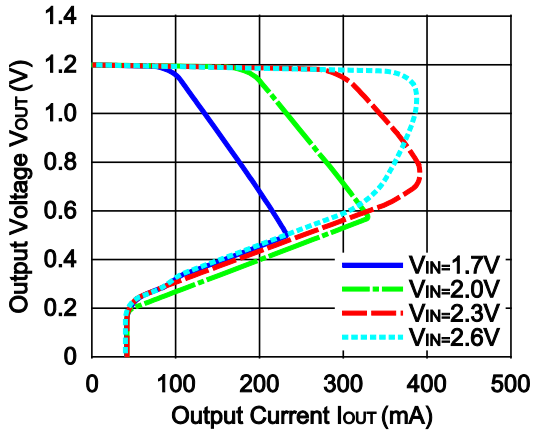

RP104x251x

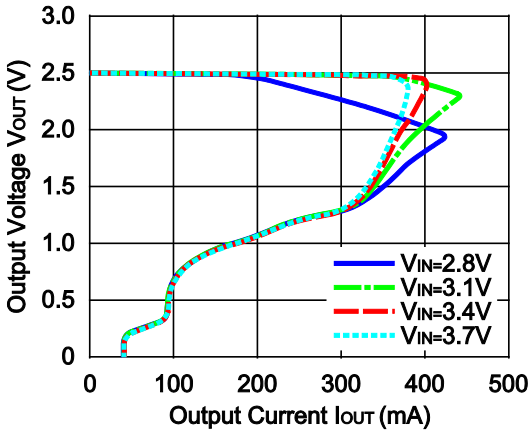

RP104x331x

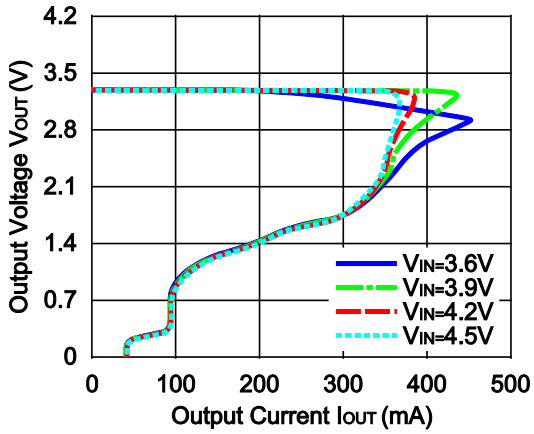

2) Output Voltage vs. Input Voltage (C1=Ceramic 0.1µF, C2=Ceramic 0.1µF, Topt=25°C)

RP104x121x

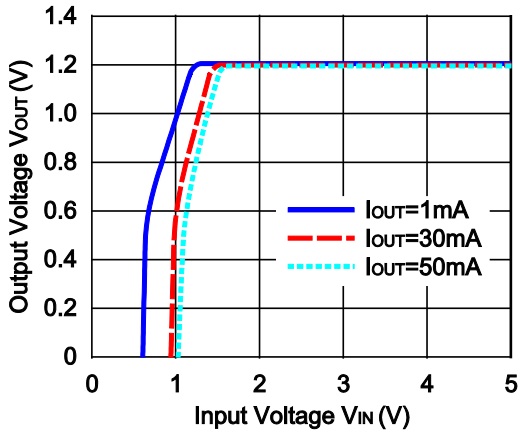

RP104x251x

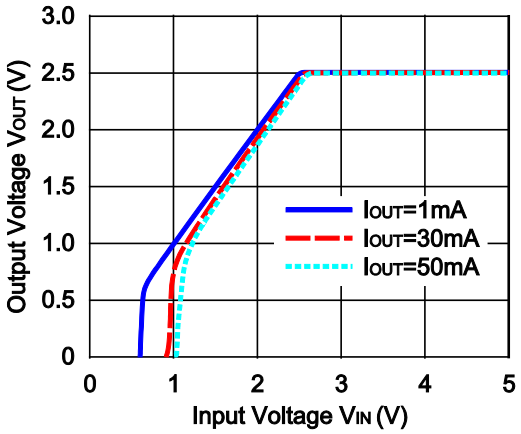

RP104x331x

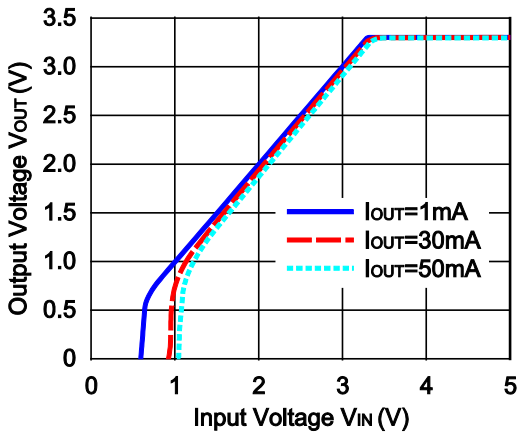

3) Supply Current vs. Input Voltage (C1=Ceramic 0.1µF, C2=Ceramic 0.1µF, Topt=25°C)

RP104x121x

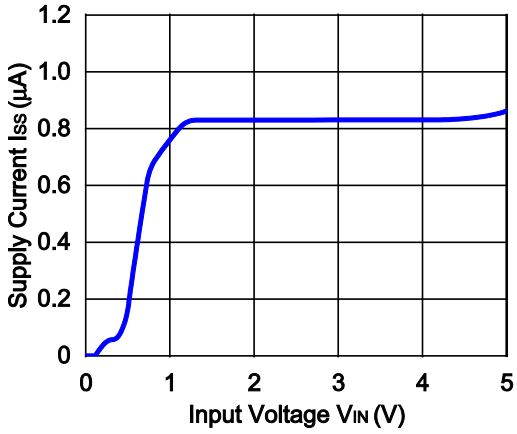

RP104x251x

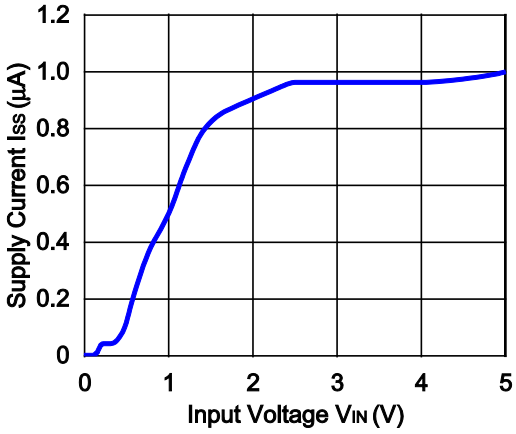

RP104x331x

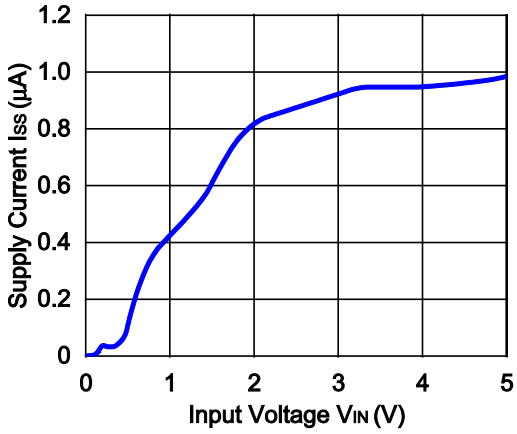

4) Output Voltage vs. Temperature (C1=Ceramic 0.1µF, C2=Ceramic 0.1µF, I_{OUT}=1mA)

RP104x121x

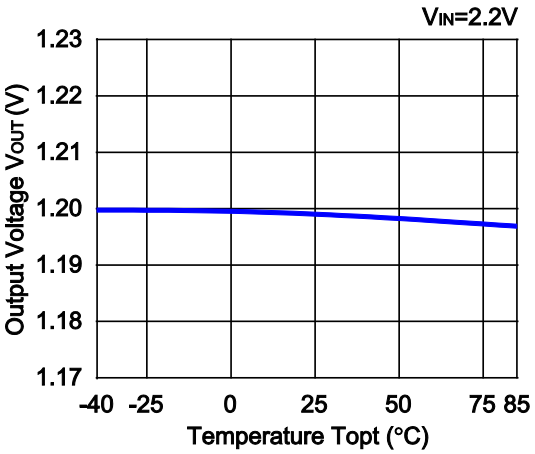

RP104x251x

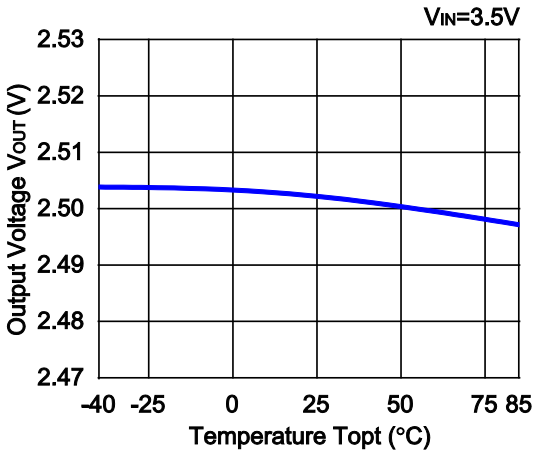

RP104x331x

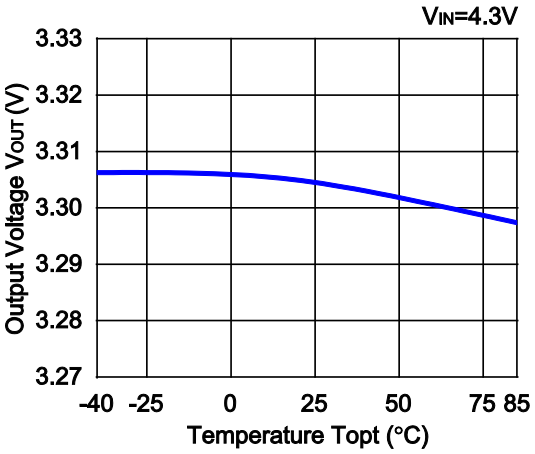

5) Supply Current vs. Temperature (C1=Ceramic 0.1µF, C2=Ceramic 0.1µF)

RP104x121x

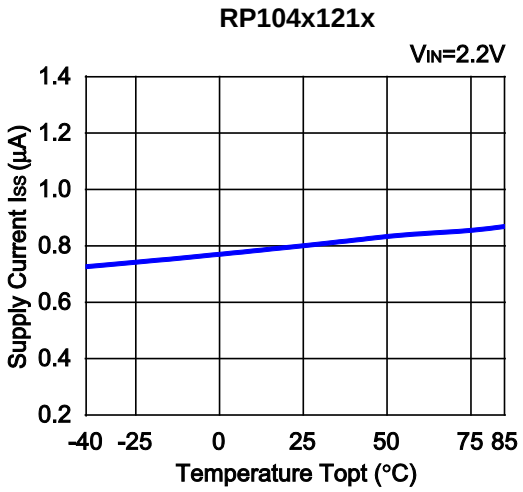

RP104x251x

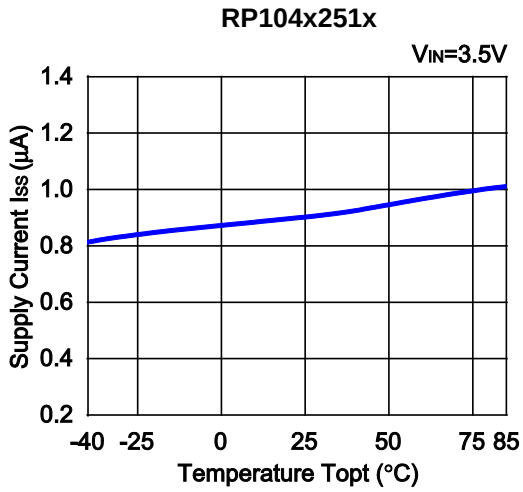

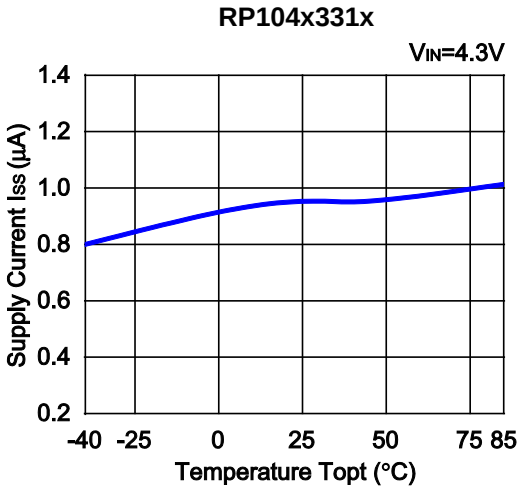

6) Dropout Voltage vs. Output Current (C1=Ceramic 0.1µF, C2=Ceramic 0.1µF, Topt=25°C)

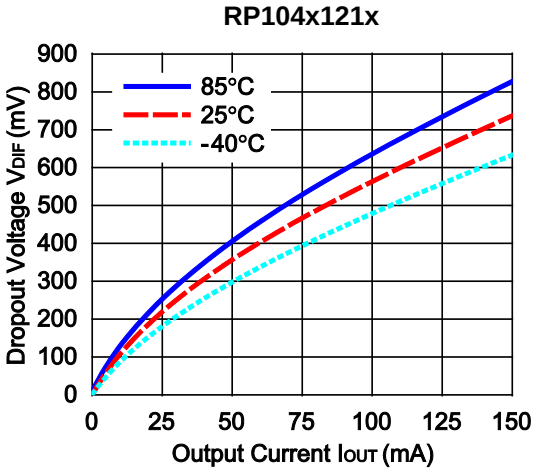

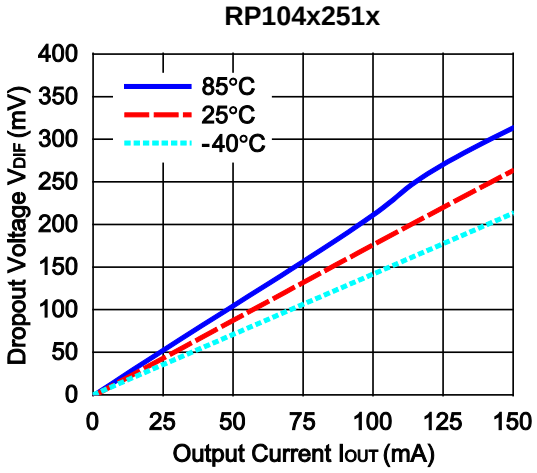

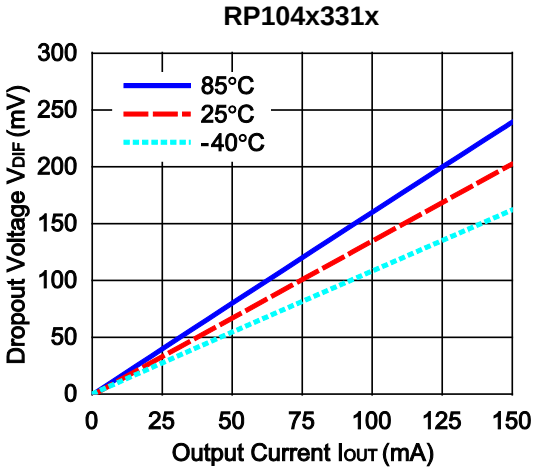

7) Dropout Voltage vs. Set Output Voltage (C1=Ceramic 0.1µF, C2=Ceramic 0.1µF, Topt=25°C)

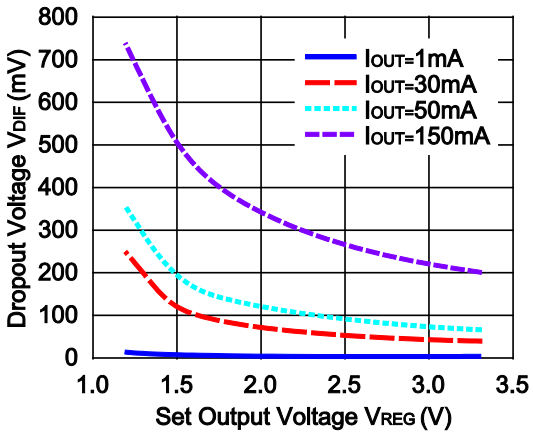

8) Ripple Rejection vs. Input Bias Voltage (C1=none, C2=Ceramic 0.1µF, Topt=25°C)

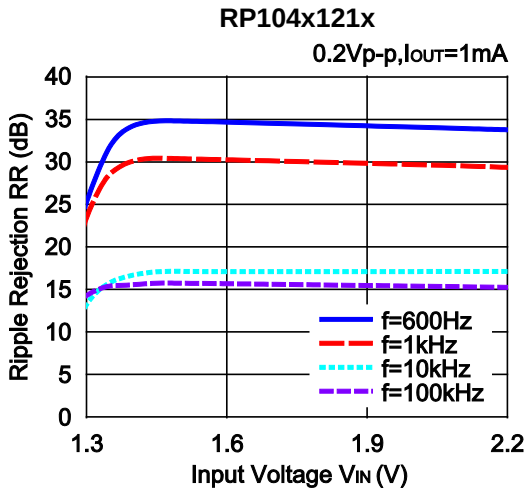

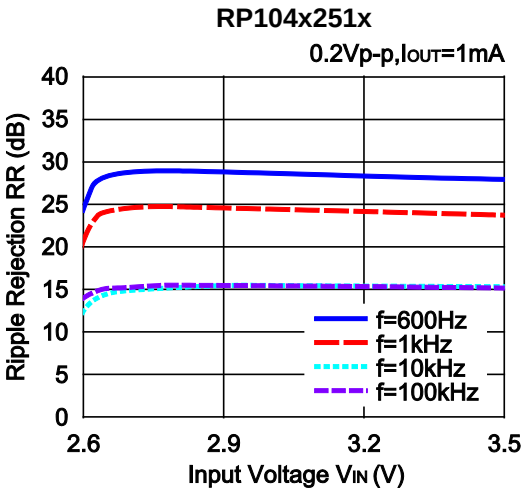

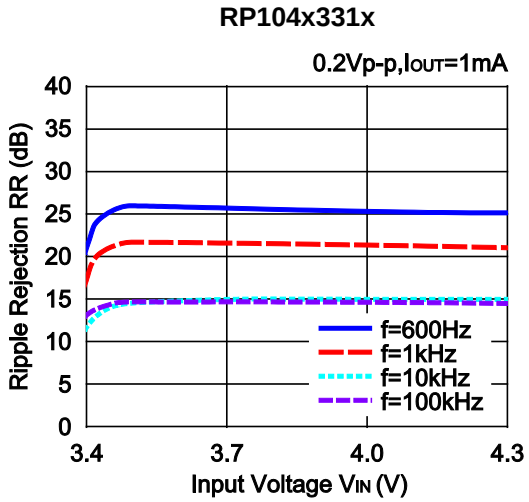

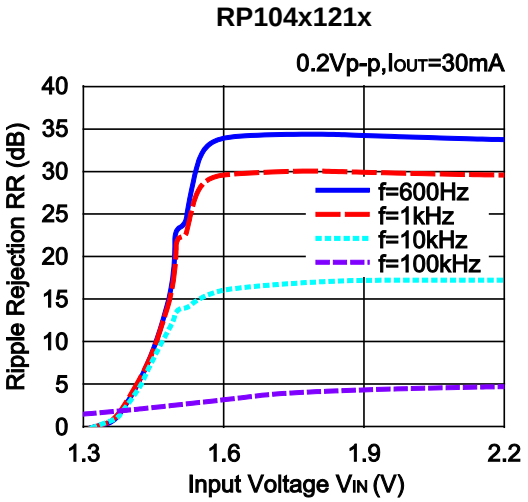

RP104x251x

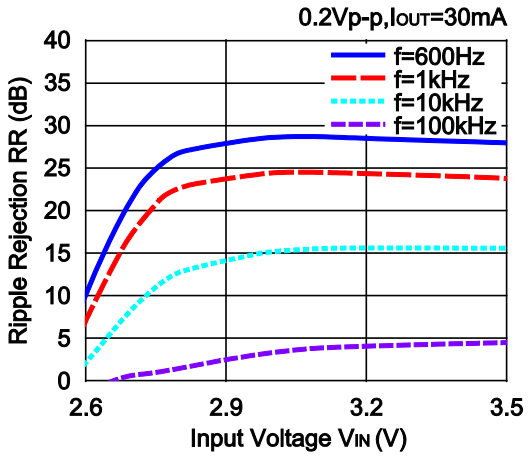

RP104x331x

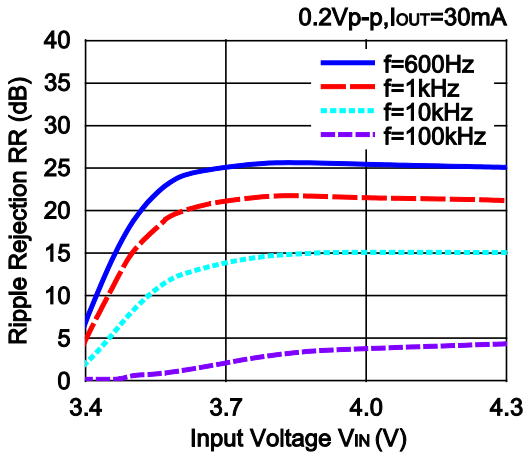

RP104x121x

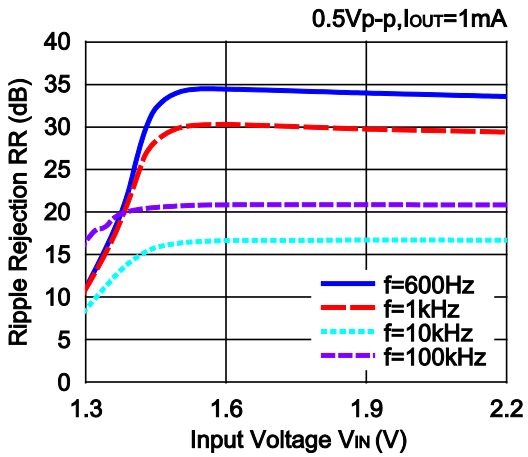

RP104x251x

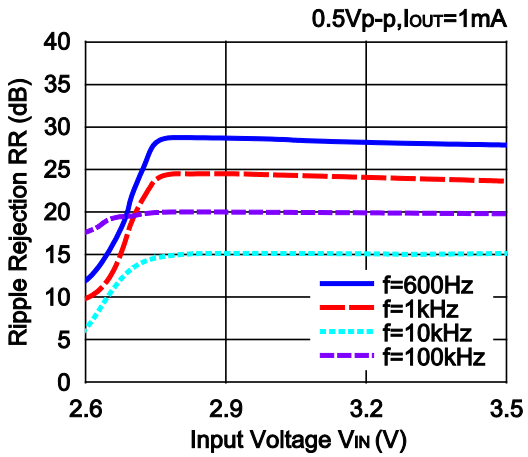

RP104x331x

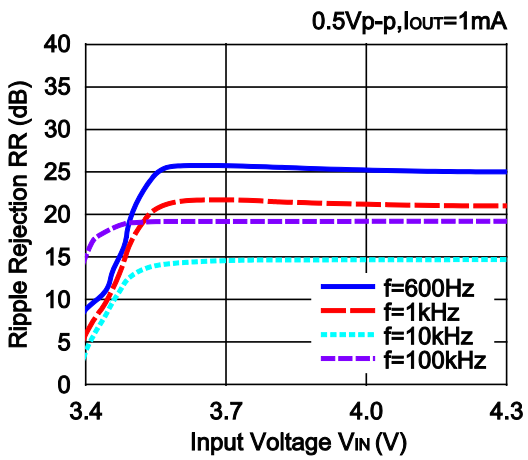

RP104x121x

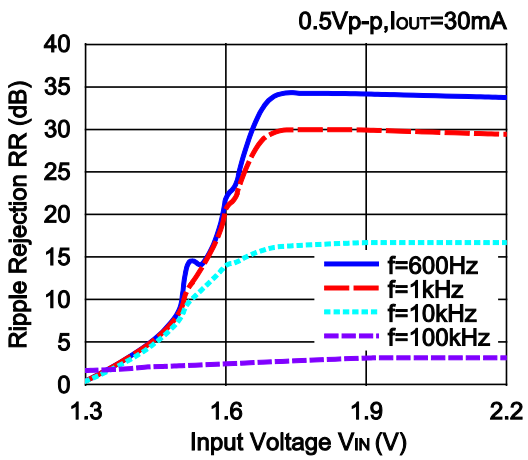

RP104x251x

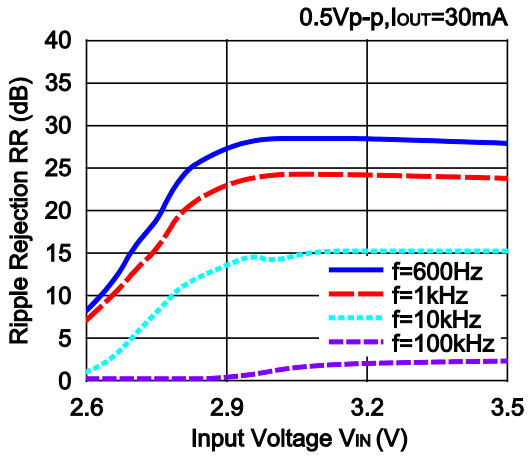

RP104x331x

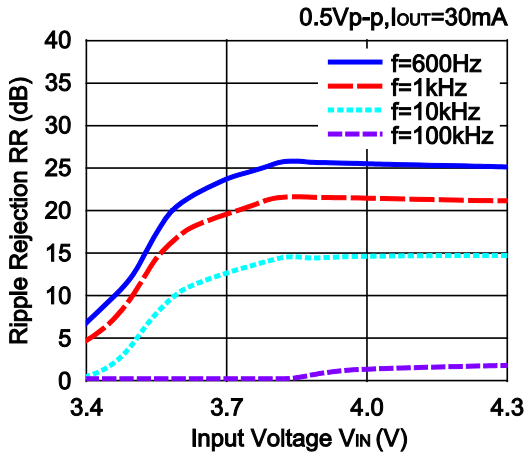

9) Ripple Rejection vs. Frequency (C1=none, C2=Ceramic 0.1µF, Topt=25°C)

RP104x121x

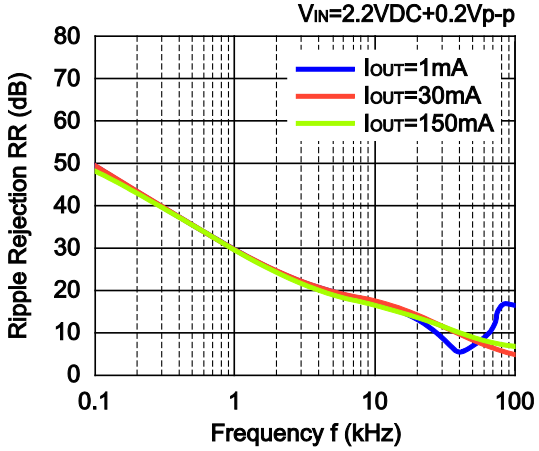

RP104x251x

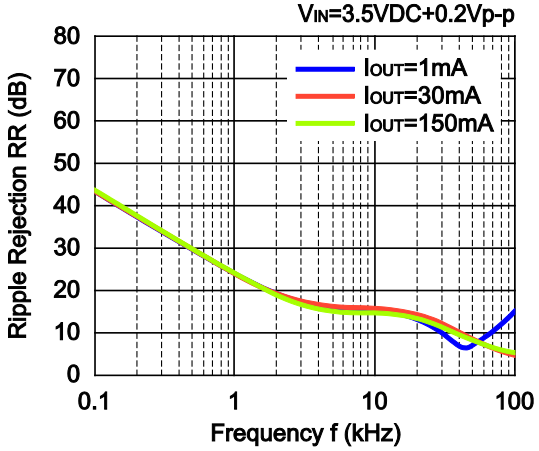

RP104x331x

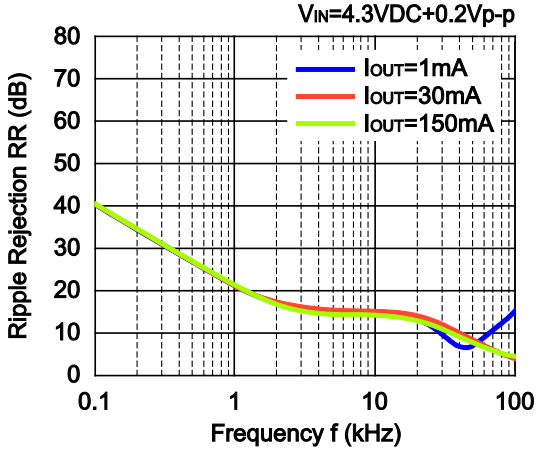

RP104x121x

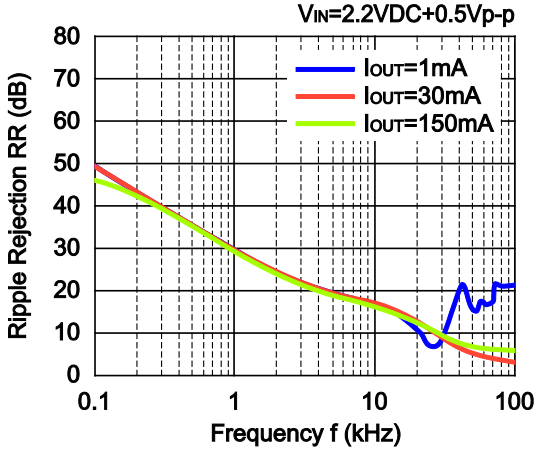

RP104x251x

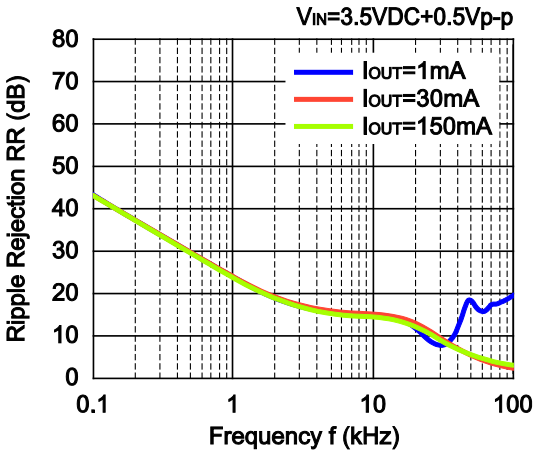

RP104x331x

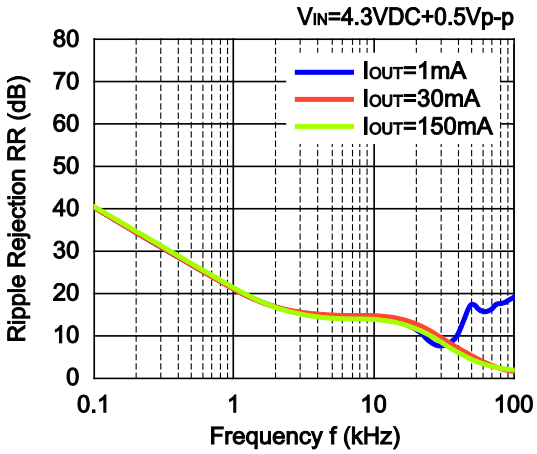

10) Input Transient Response (C1=none, IOUT=30mA, Topt=25°C)

RP104x121x

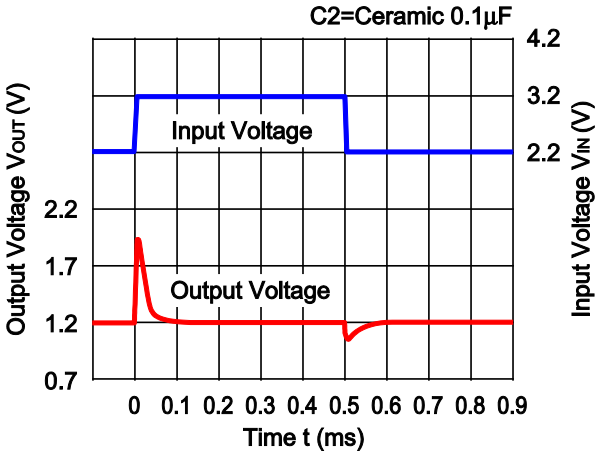

RP104x251x

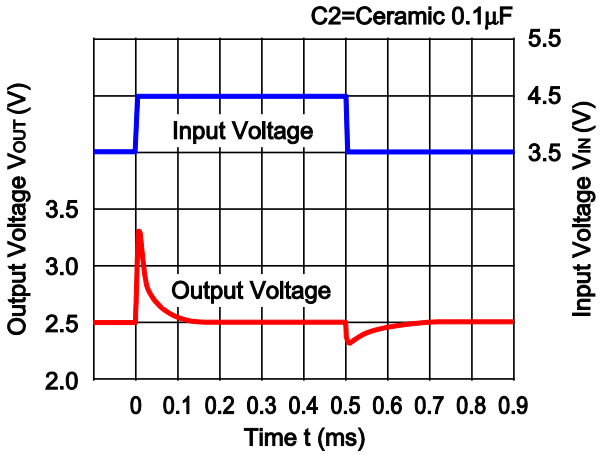

RP104x331x

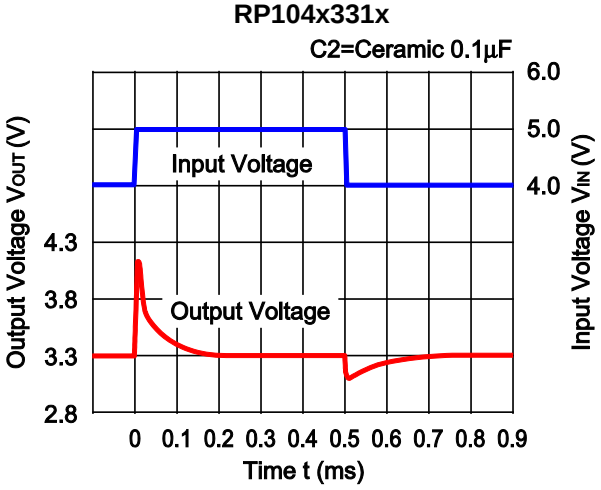

RP104x121x

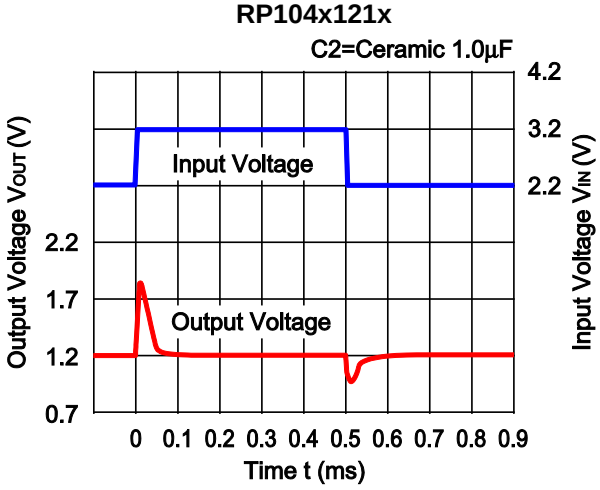

RP104x251x

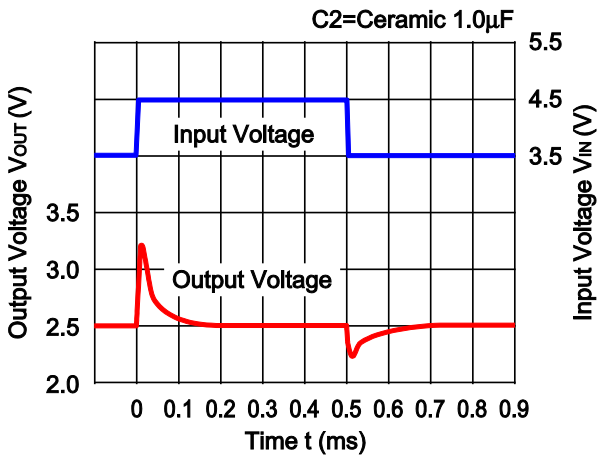

RP104x331x

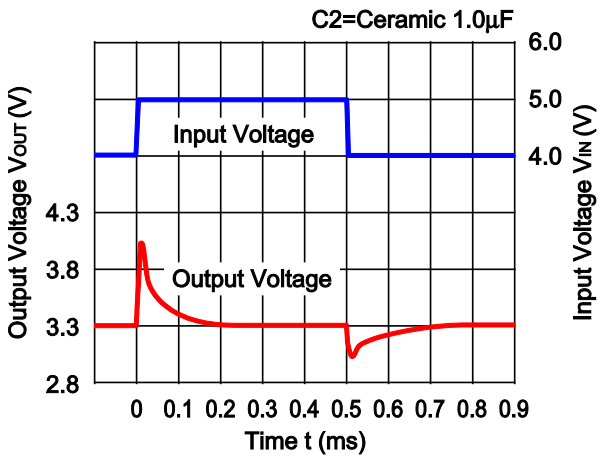

11) Load Transient Response (C1=Ceramic 0.1µF, Topt=25°C)

RP104x121x

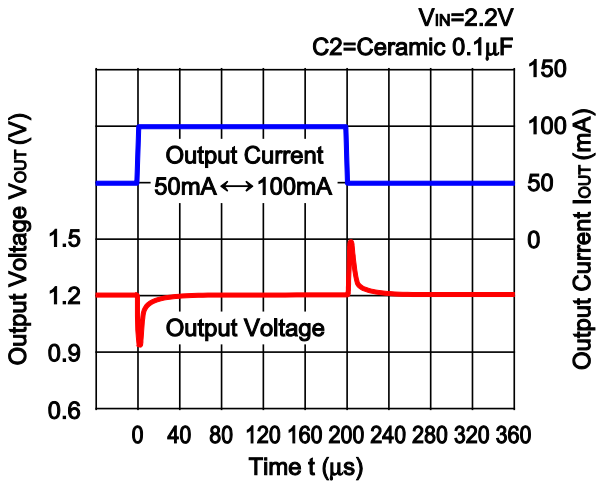

RP104x251x

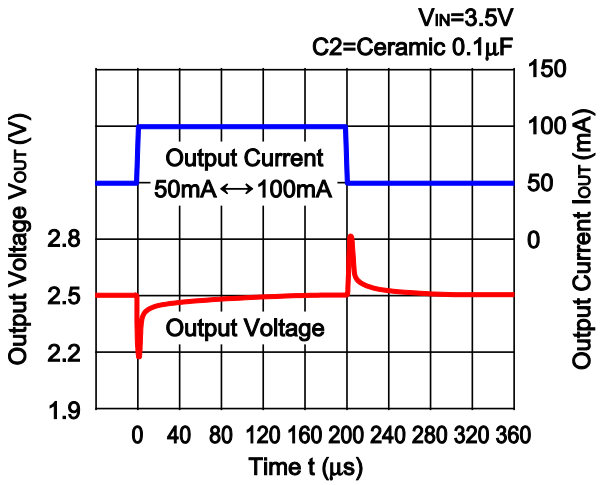

RP104x331x

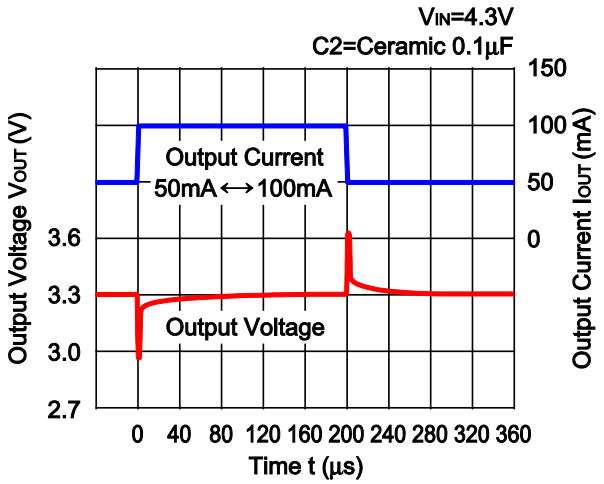

RP104x121x

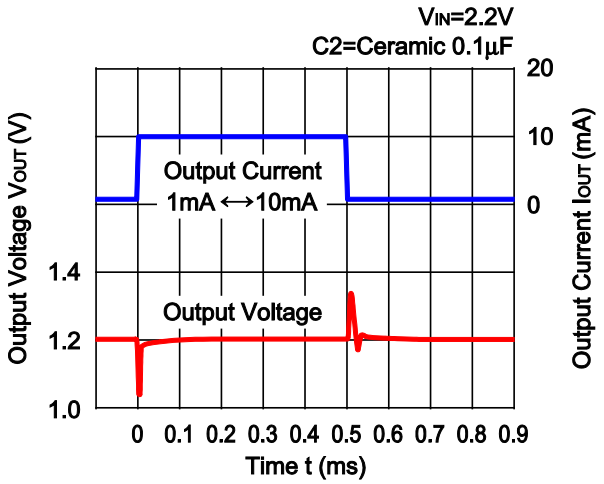

RP104x251x

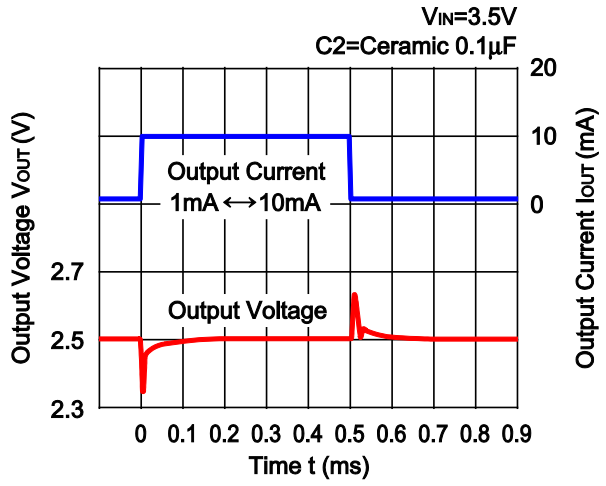

RP104x331x

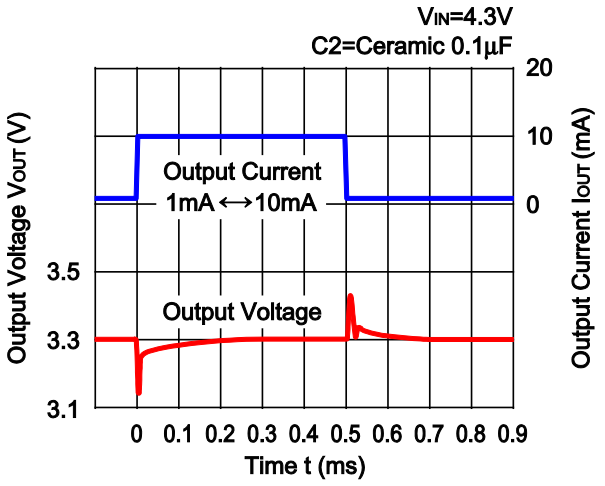

RP104x121x

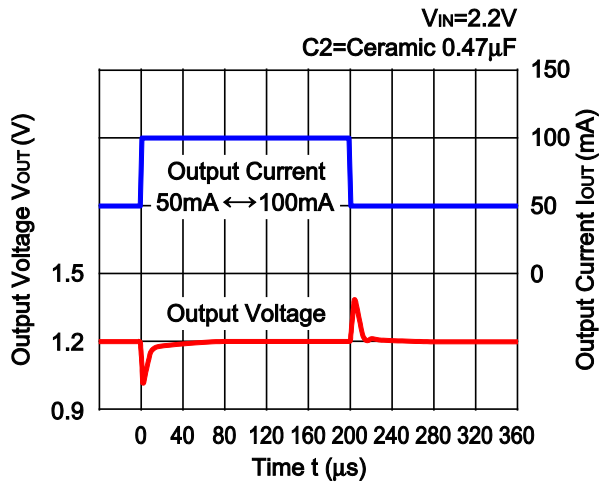

RP104x251x

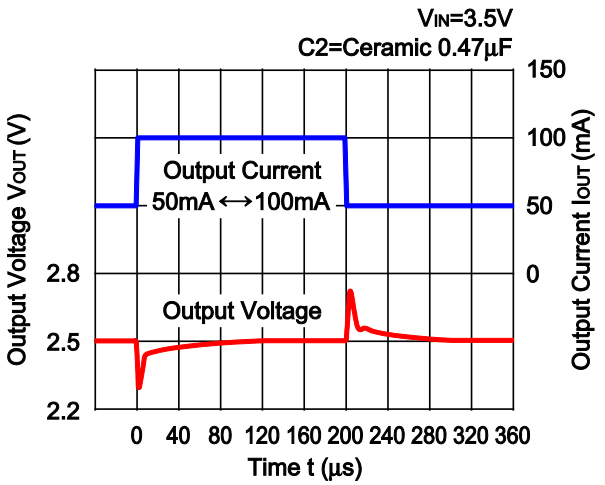

RP104x331x

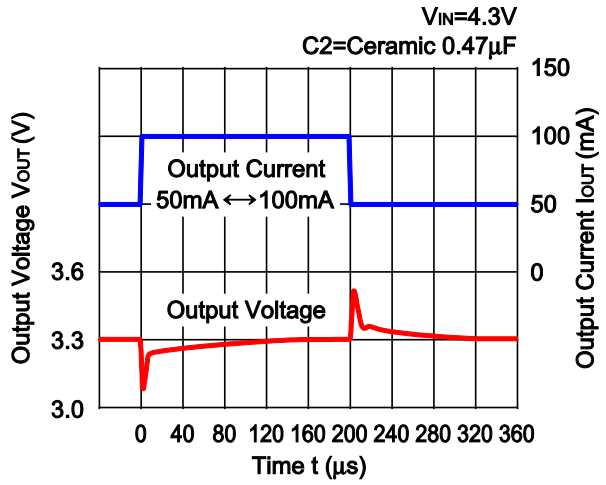

RP104x121x

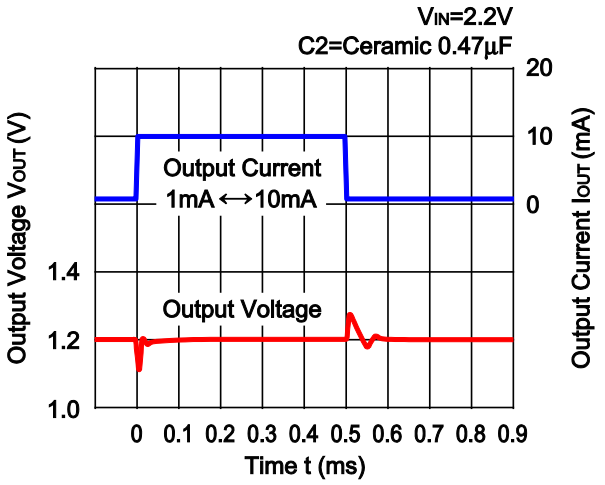

RP104x251x

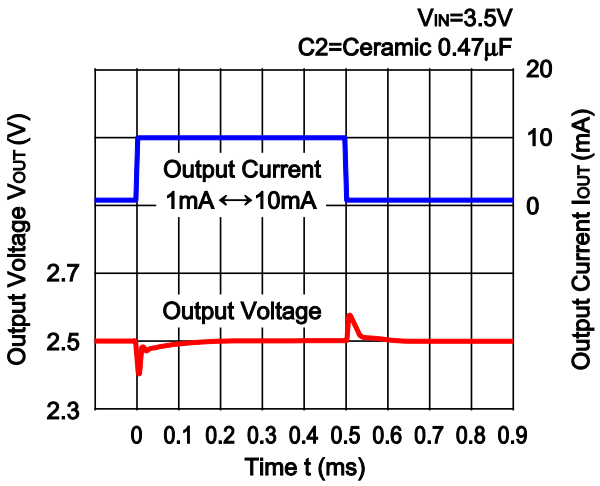

RP104x331x

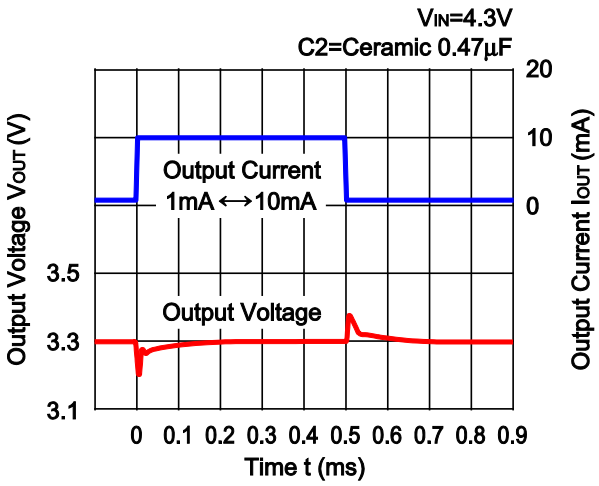

RP104x121x

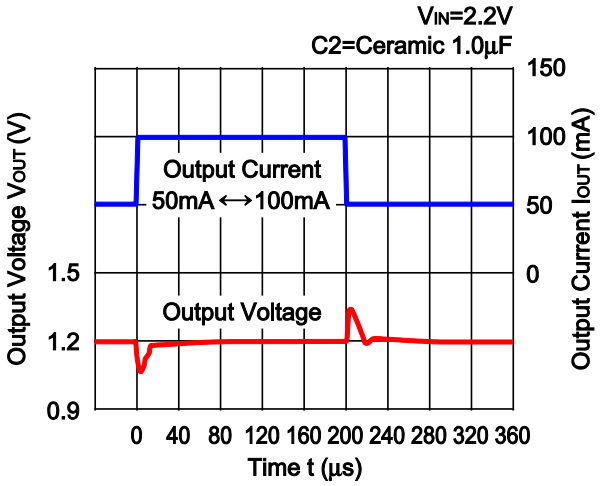

RP104x251x

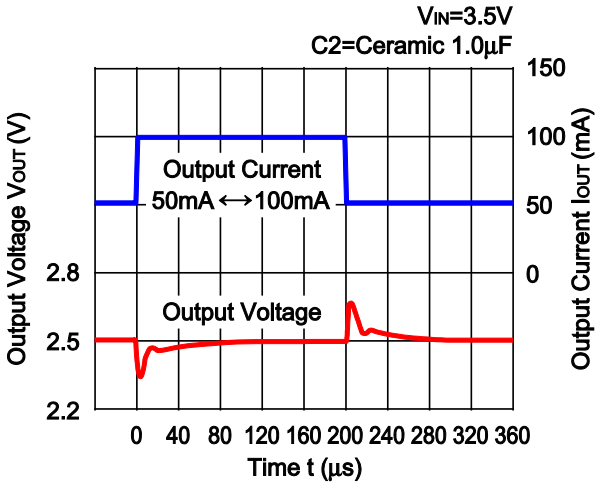

RP104x331x

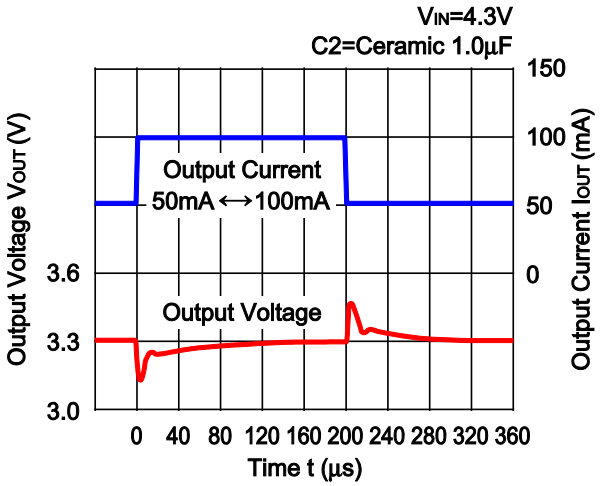

RP104x121x

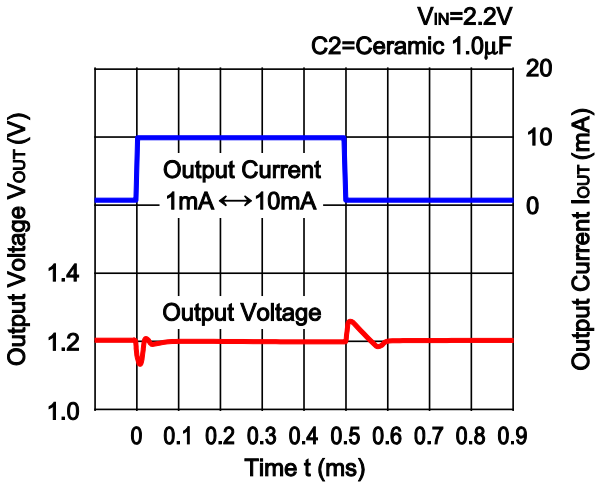

RP104x251x

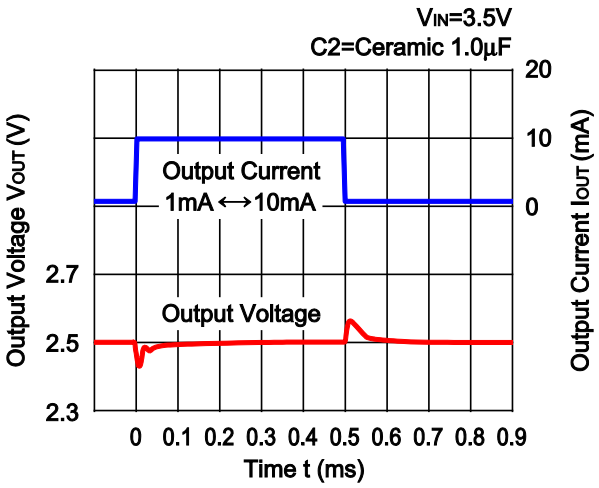

RP104x331x

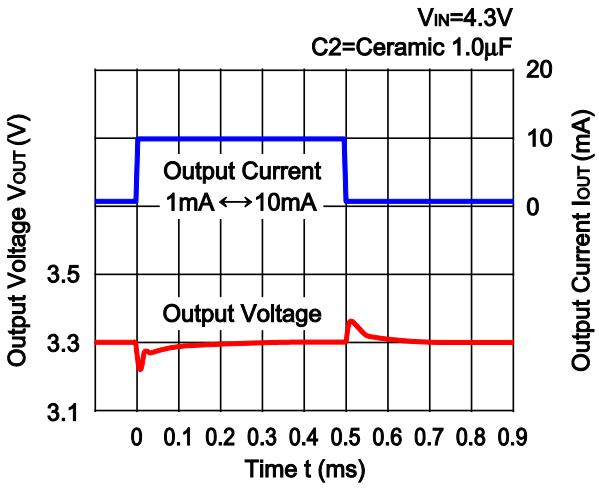

12) Turn On Speed with CE pin (C1=Ceramic 0.1µF, C2=Ceramic 0.1µF, Topt=25°C)

RP104x121B/D

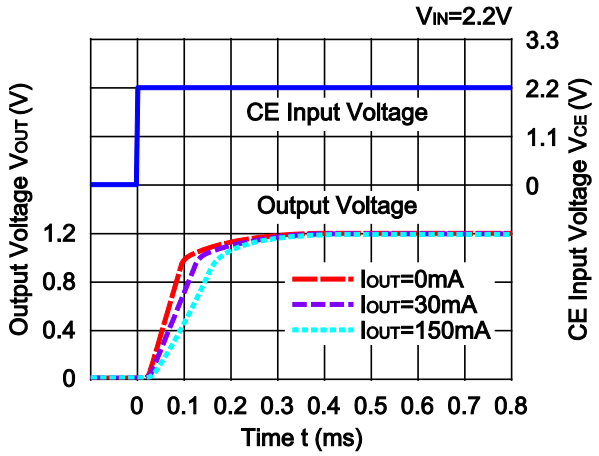

RP104x251B/D

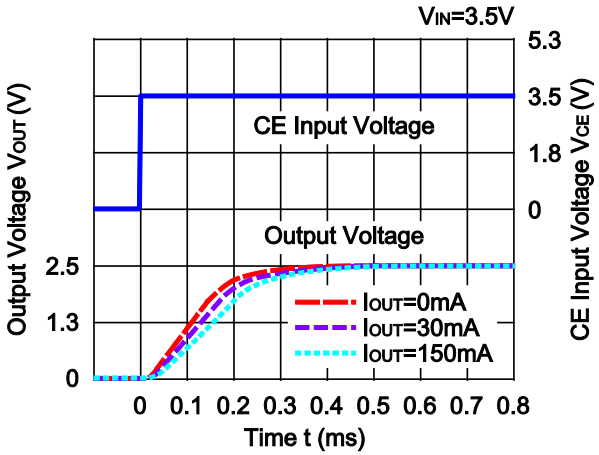

RP104x331B/D

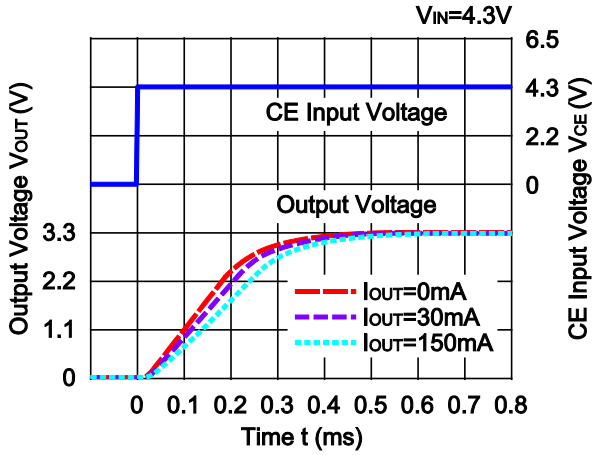

13) Turn Off Speed with CE pin (B Version) (C1=Ceramic 0.1µF, C2=Ceramic 0.1µF, Topt=25°C)

RP104x121B

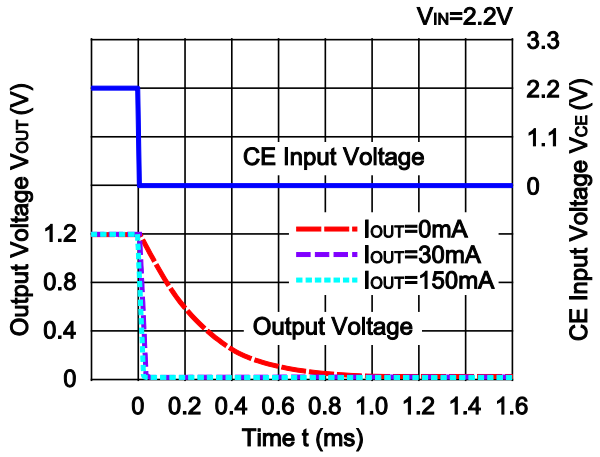

RP104x331B

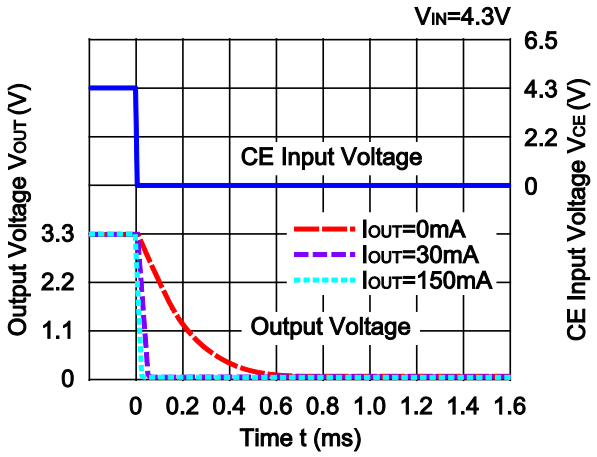

14) Turn Off Speed with CE pin (D Version) (C1=Ceramic 0.1µF, C2=Ceramic 0.1µF, Topt=25°C)

RP104x121D

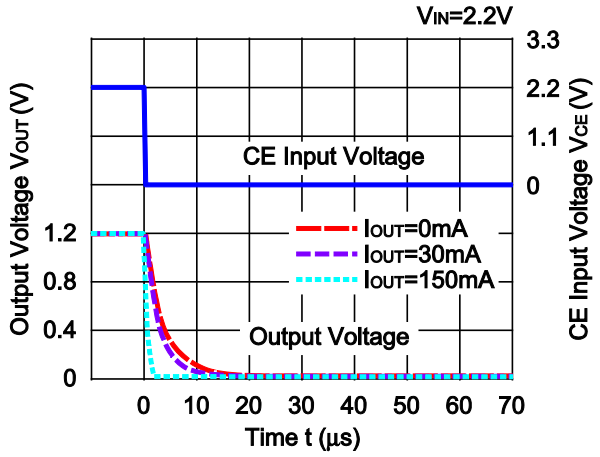

RP104x331D

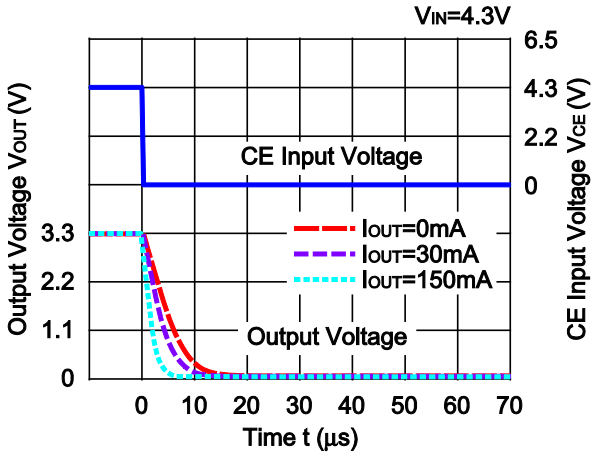

15) Turn On Speed of C Version (C1=Ceramic 0.1µF, C2=Ceramic 0.1µF, VIN=5.0V, Topt=25°C)

RP104x121C

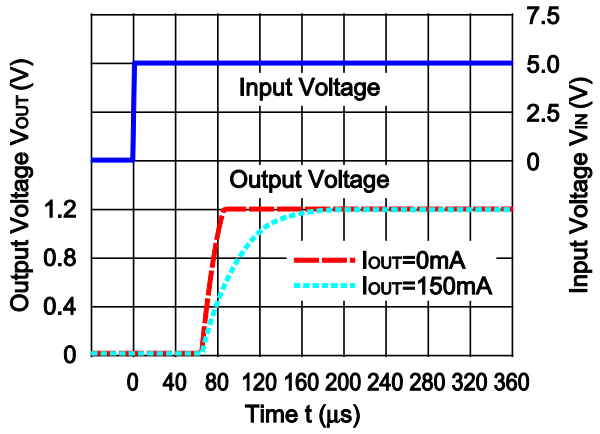

RP104x251C

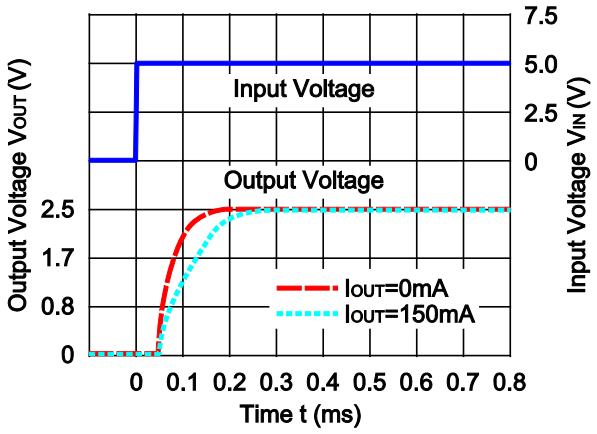

RP104x331C

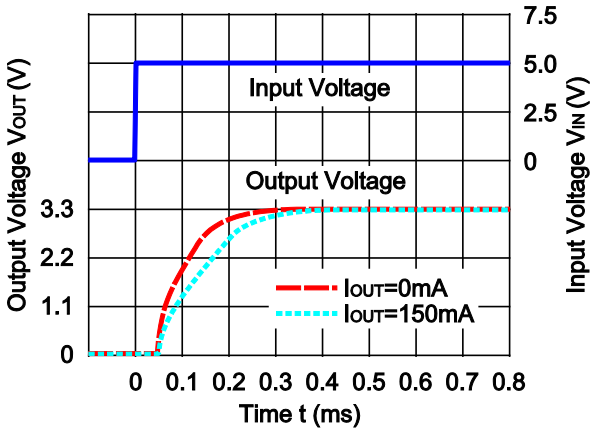
Input Voltage
Output Voltage
IOUT=0mA
IOUT=150mA
Output Voltage VOUT (V)
Input Voltage VIN (V)
7.5
5.0
2.5
0
3.3
2.2
1.1
0
0 0.1 0.2 0.3 0.4 0.5 0.6 0.7 0.8
Time t (ms)

ESR vs. Output Current

Ceramic type output capacitor is recommended for this series; however, the other output capacitors with low ESR also can be used. The relations between I_{OUT} (Output Current) and ESR of an output capacitor are shown below. The conditions when the white noise level is under 40μV (Avg.) are marked as the hatched area in the graph.

Measurement conditions

Frequency Band : 10Hz to 2MHz

Temperature : −40°C to 85°C

RP104x121x

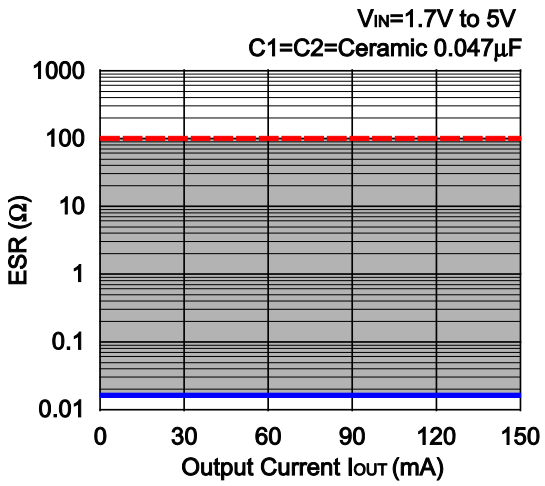

RP104x251x

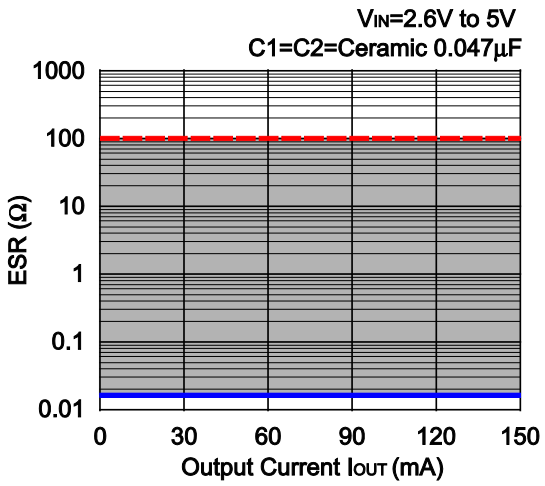

RP104x331x

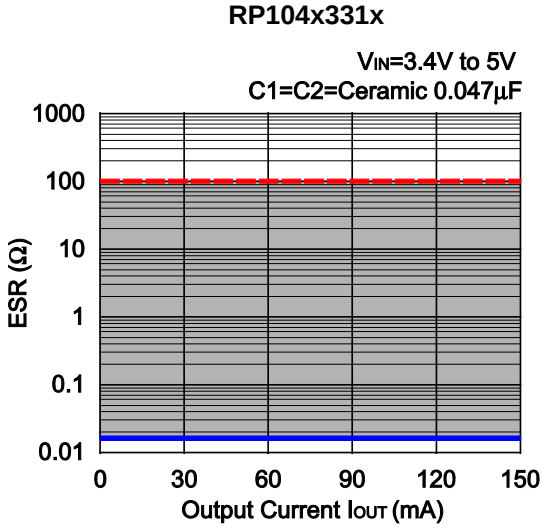

1. The products and the product specifications described in this document are subject to change or discontinuation of production without notice for reasons such as improvement. Therefore, before deciding to use the products, please refer to our sales representatives for the latest information thereon.
2. The materials in this document may not be copied or otherwise reproduced in whole or in part without prior written consent of our company.
3. Please be sure to take any necessary formalities under relevant laws or regulations before exporting or otherwise taking out of your country the products or the technical information described herein.
4. The technical information described in this document shows typical characteristics of and example application circuits for the products. The release of such information is not to be construed as a warranty of or a grant of license under our company's or any third party's intellectual property rights or any other rights.
5. The products listed in this document are intended and designed for use as general electronic components in standard applications (office equipment, telecommunication equipment, measuring instruments, consumer electronic products, amusement equipment etc.). Those customers intending to use a product in an application requiring extreme quality and reliability, for example, in a highly specific application where the failure or misoperation of the product could result in human injury or death (aircraft, spacevehicle, nuclear reactor control system, traffic control system, automotive and transportation equipment, combustion equipment, safety devices, life support system etc.) should first contact us.
6. We are making our continuous effort to improve the quality and reliability of our products, but semiconductor products are likely to fail with certain probability. In order to prevent any injury to persons or damages to property resulting from such failure, customers should be careful enough to incorporate safety measures in their design, such as redundancy feature, fire containment feature and fail-safe feature. We do not assume any liability or responsibility for any loss or damage arising from misuse or inappropriate use of the products.
7. Anti-radiation design is not implemented in the products described in this document.
8. The X-ray exposure can influence functions and characteristics of the products. Confirm the product functions and characteristics in the evaluation stage.
9. WLCSP products should be used in light shielded environments. The light exposure can influence functions and characteristics of the products under operation or storage.
10. There can be variation in the marking when different AOI (Automated Optical Inspection) equipment is used. In the case of recognizing the marking characteristic with AOI, please contact our sales or our distributor before attempting to use AOI.
11. Please contact our sales representatives should you have any questions or comments concerning the products or the technical information.

NISSHINBO

Nisshinbo Micro Devices Inc.

Official website
https://www.nisshinbo-microdevices.co.jp/en/
Purchase information
https://www.nisshinbo-microdevices.co.jp/en/buy/

ENTEGRECİ

Bu belge www.entegreci.com üzerinden sunulmaktadır.

Elektronik komponent tedarikinde Entegreci

Entegreci, Eskişehir merkezli, Türkiye geneline satış yapan bir elektronik komponent mağazasıdır. Entegreler (IC), mikrodenetleyiciler, transistörler, diyotlar, pasif elemanlar, konnektörler, modüller ve geliştirme kartları tek adetten seri üretim adetlerine kadar satılır. Ürün sayfalarında güncel stok durumunu, fiyatı ve datasheet bağlantısını bulabilirsiniz.

Parça koduyla arama

Üretici parça numarasını yazın; stok ve fiyatı hemen görün.

www.entegreci.com

Ürün kategorileri

Entegreden kapasitöre tüm elektronik komponent kategorileri.

Kategorilere göz atın

Üreticiler

Aradığınız üreticinin ürünlerini tek sayfada inceleyin.

Üreticileri görün

Toplu alım ve teklif

Listede olmayan ya da yüksek adetli parçalar için teklif isteyin.

Teklif isteyin

www.entegreci.com | **destek@entegreci.com** | **0850 305 90 34**

Entegreci is an online electronic components store based in Türkiye. Search by manufacturer part number to see stock, prices and datasheets for integrated circuits, microcontrollers, transistors, passive components and connectors, or request a quote for parts that are not listed.

Bu sayfa Entegreci tarafından eklenmiştir. Belgenin önceki sayfaları asıl yayıncısına aittir ve içeriği değiştirilmemiştir; en güncel sürüm için belgenin yayıncısına başvurun.