∗ RP106N (SOT-23-5) is the discontinued product as of March 2020.

NISSHINBO

RP106x SERIES

0.8%ACCURACY 0.7V OUTPUT 400mA LDO REGULATOR

NO.EA-180-251006

OUTLINE

The RP106x Series are low voltage 400mA voltage regulator. These ICs had been further improved of low-voltage capability compared with previous low-voltage product.

The input voltage is as low as Min. 1.0V and the output voltage can be set from 0.7V. The output voltage accuracy has been improved to ±0.8% and due to a built-in transistor with low on-resistance of 0.55Ω (at V_{OUT}=1.5V).

Each of these ICs consists of a voltage reference unit, an error amplifier, a resistor-net for voltage setting, and a current limit circuits for over-current for the destruction prevention by the over-current.

The CE pin can switch the regulator to standby mode. In addition to SOT-23-5 and SC-88A packages, a 0.69mm square WLCSP-4-P5 package and a 1.2mm square DFN(PL)1212-6 are also available.

FEATURES

- Supply Current ..... Typ. 48μA
- Supply Current (Standby) ..... Typ. 0.1μA
- Ripple Rejection ..... Typ. 60dB (f=10kHz)
- Input Voltage Range ..... 1.0V to 3.6V
- Output Voltage Range ..... 0.7V to 1.8V (0.1V steps)
  (For other voltages, please refer to MARK INFORMATIONS.)
- Output Voltage Accuracy ..... ±0.8% (V_{OUT}≥1.0V, T_{opt}=25°C)
- Temperature-Drift Coefficient of Output Voltage ... Typ. ±60ppm/°C
- Dropout Voltage ..... Typ. 0.22V (V_{OUT}=1.5V)
- Line Regulation ..... Typ. 0.10%/V
- Packages ..... WLCSP-4-P5, DFN(PL)1212-6, SC-88A, SOT-23-5
- Built-in Fold Back Protection Circuit ..... Typ. 110mA (Current at short mode)
- Built-in Constant Slope Circuit
- Ceramic capacitors are recommended to be used with this IC ..... 1.0μF or more

APPLICATIONS

- Power source for portable communication equipment.
- Power source for electrical appliances such as cameras, VCRs and camcorders.
- Power source for battery-powered equipment.

BLOCK DIAGRAMS

RP106xxxxB

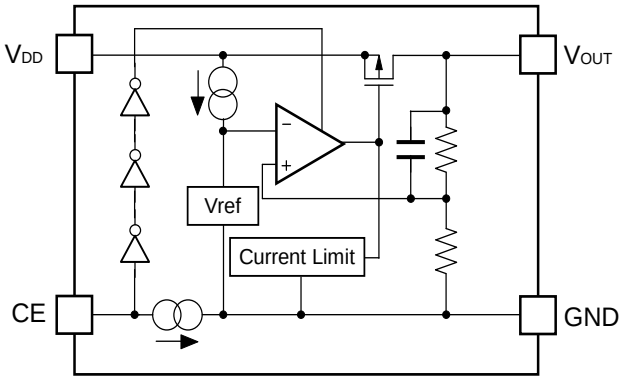

RP106xxxxD

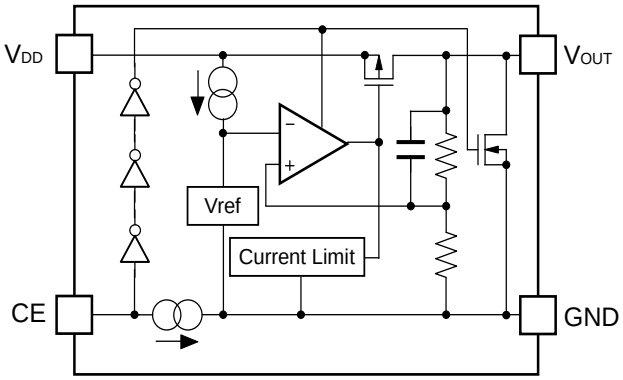

SELECTION GUIDE

The output voltage, auto discharge function, package, and the taping type, etc. for the ICs can be selected at the user's request.

Product Name	Package	Quantity per Reel	Pb Free	Halogen Free
RP106Zxx1∗-TR-F	WLCSP-4-P5	5,000 pcs	Yes	Yes
RP106Kxx1∗-TR	DFN(PL)1212-6	5,000 pcs	Yes	Yes
RP106Qxx2∗-TR-FE	SC-88A	3,000 pcs	Yes	Yes
RP106Nxx1∗-TR-FE	SOT-23-5	3,000 pcs	Yes	Yes

xx : Setting Output Voltage (V_{OUT}) :
Fixed Type: 07 to 18 Stepwise setting with 0.1V increment in the range from 0.7V to 1.8V
Exception: 1.25V=RP106x12x∗5-xx
1.85V=RP106x18x∗5-xx

∗ : Designation of Active Type:
B:"H" Active, without auto discharge function at off state.
D:"H" Active, with auto discharge function at off state.

PIN CONFIGURATIONS

● **WLCSP-4-P5**

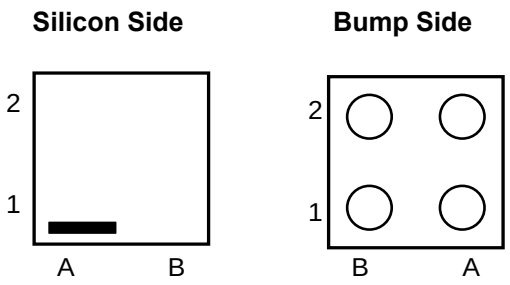

● **DFN(PL)1212-6**

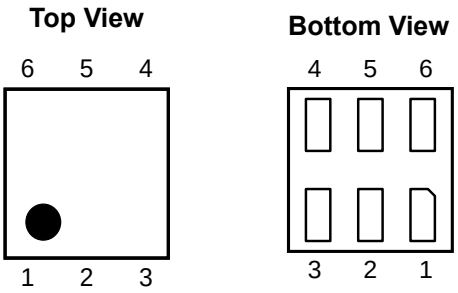

● **SC-88A**

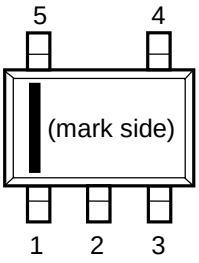

● **SOT-23-5**

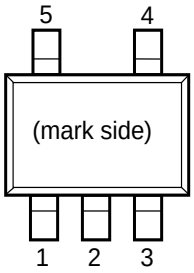

PIN DESCRIPTIONS

● **WLCSP-4-P5**

Pin No.	Symbol	Description
A1	V_{DD}	Input Pin
A2	V_{OUT}	Output Pin
B1	CE	Chip Enable Pin ("H" Active)
B2	GND	Ground Pin

● **DFN(PL)1212-6**

Pin No.	Symbol	Description
1	NC	No Connection
2	GND	Ground Pin
3	CE	Chip Enable Pin ("H" Active)
4	V_{DD}	Input Pin
5	NC	No Connection
6	V_{OUT}	Output Pin

● **SC-88A**

Pin No.	Symbol	Description
1	CE	Chip Enable Pin ("H" Active)
2 *	NC	No Connection
3	GND	Ground Pin
4	V_{OUT}	Output Pin
5	V_{DD}	Input Pin

∗ Pin No. 2 is connected to the bottom of the IC.
It is recommended that the pin be connected to the ground plane on the board, or otherwise be left floating so that there is no contact with other potentials.

● **SOT-23-5**

Pin No.	Symbol	Description
1	V_{DD}	Input Pin
2	GND	Ground Pin
3	CE	Chip Enable Pin ("H" Active)
4	NC	No Connection
5	V_{OUT}	Output Pin

ABSOLUTE MAXIMUM RATINGS

Symbol	Item	Rating	Unit
V_{IN}	Input Voltage	4.0	V
V_{CE}	Input Voltage (CE Pin)	−0.3 to 4.0	V
V_{OUT}	Output Voltage	−0.3 to V_{IN}+0.3	V
I_{OUT}	Output Current	500	mA
P_D	Power Dissipation (WLCSP-4-P5)*	278	mW
	Power Dissipation (DFN(PL)1212-6)*	400	
	Power Dissipation (SC-88A)*	380	
	Power Dissipation (SOT-23-5)*	420	
Topt	Operating Temperature Range	−40 to 85	°C
Tstg	Storage Temperature Range	−55 to 125	°C

∗) For Power Dissipation, please refer to PACKAGE INFORMATION.

ABSOLUTE MAXIMUM RATINGS

Electronic and mechanical stress momentarily exceeded absolute maximum ratings may cause permanent damage and may degrade the life time and safety for both device and system using the device in the field. The functional operation at or over these absolute maximum ratings is not assured.

ELECTRICAL CHARACTERISTICS

- **RP106x**

V_{IN}=Set V_{OUT}+1V, I_{OUT}=1mA, C_{IN}=C_{OUT}=1μF, unless otherwise noted.
The specifications surrounded by ☐ are guaranteed by Design Engineering at −40°C ≤ Topt ≤ 85°C.

Topt=25°C

Symbol	Item	Conditions		Min.	Typ.	Max.	Unit
V_{OUT}	Output Voltage	Topt=25°C	V_{OUT} ≥ 1.0V	×0.992		×1.008	V
			V_{OUT} < 1.0V	−8		8	mV
		−40°C ≤ Topt ≤ 85°C	V_{OUT} ≥ 1.0V	☐×0.983		☐×1.017	V
			V_{OUT} < 1.0V	☐−17		☐17	mV
I_{OUT}	Output Current			☐400			mA
$\Delta V_{OUT}/\Delta I_{OUT}$	Load Regulation	1mA ≤ I_{OUT} ≤ 400mA			25	☐45	mV
V_{DIF}	Dropout Voltage	Refer to the following table					
I_{SS}	Supply Current	I_{OUT}=0mA			48	75	μA
$I_{standby}$	Supply Current (Standby)	V_{CE}=0V			0.1	8.0	μA
$\Delta V_{OUT}/\Delta V_{IN}$	Line Regulation	Set V_{OUT}+0.5V ≤ V_{IN} ≤ 3.6V In case that Set V_{OUT} < 0.8V, 1.3V ≤ V_{IN} ≤ 3.6V			0.10	☐0.25	%/V
RR	Ripple Rejection	f=10kHz, Ripple 0.2Vp-p V_{IN}=Set V_{OUT}+1V, I_{OUT}=30mA			60		dB
V_{IN}	Input Voltage			☐1.0		☐3.6	V
$\Delta V_{OUT}/\Delta Topt$	Output Voltage Temperature Coefficient	−40°C ≤ Topt ≤ 85°C			±60		ppm /°C
I_{SC}	Short Current Limit	V_{OUT}=0V			110		mA
I_{PD}	CE Pull-down Current				0.38	☐0.7	μA
V_{CEH}	CE Input Voltage "H"			☐0.9			V
V_{CEL}	CE Input Voltage "L"					☐0.4	V
en	Output Noise	BW=10Hz to 100kHz I_{OUT}=30mA, V_{OUT}=0.7V			30		μVrms
R_{LOW}	Low Output Nch Tr. ON Resistance (of D version)	V_{IN}=2.0V, V_{CE}=0V			43		Ω

All test items listed under Electrical Characteristics are done under the pulse load condition (Tj≈Ta=25°C) except Output Noise, Ripple Rejection and Output Voltage Temperature Coefficient items.

The specifications surrounded by ⬚ are guaranteed by Design Engineering at −40°C ≤ T_{opt} ≤ 85°C.

- **Dropout Voltage by Output Voltage**

Topt=25°C

Output Voltage V_{OUT} (V)	Dropout Voltage V_{DIF} (V)		
	Condition	Typ.	Max.
0.7 ≤ V_{OUT} < 0.8	I_{OUT}=400mA	0.48	0.62
0.8 ≤ V_{OUT} < 0.9		0.40	0.54
0.9 ≤ V_{OUT} < 1.0		0.36	0.47
1.0 ≤ V_{OUT} < 1.2		0.32	0.45
1.2 ≤ V_{OUT} < 1.5		0.28	0.38
1.5 ≤ V_{OUT}		0.22	0.31

RECOMMENDED OPERATING CONDITIONS (ELECTRICAL CHARACTERISTICS)

All of electronic equipment should be designed that the mounted semiconductor devices operate within the recommended operating conditions. The semiconductor devices cannot operate normally over the recommended operating conditions, even if they are used over such conditions by momentary electronic noise or surge. And the semiconductor devices may receive serious damage when they continue to operate over the recommended operating conditions.

TYPICAL APPLICATION

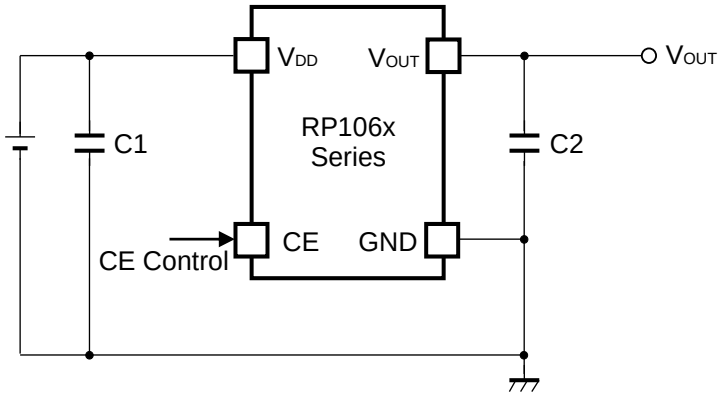

(External Components)
C1, C2 Ceramic 1.0μF MURATA: GRM155B31A105KE15

TECHNICAL NOTES

When using these ICs, consider the following points:

Phase Compensation

In these ICs, phase compensation is made for securing stable operation even if the load current is varied. For this purpose, use a capacitor C2 with 1.0μF or more.

If a tantalum capacitor is used, and its ESR (Equivalent Series Resistance) of C2 is large, the loop oscillation may result. Because of this, select C2 carefully considering its frequency characteristics.

PCB Layout

Make V_{DD} and GND lines sufficient. If their impedance is high, noise pickup or unstable operation may result. Connect a capacitor C1 with a capacitance value as much as 1.0μF or more between V_{DD} and GND pin, and as close as possible to the pins.

Set external components, especially the output capacitor C2, as close as possible to the ICs, and make wiring as short as possible.

Impedance of Input pin

CE pull-down constant current circuit is built in the RP106x.

However, if the CE pin is floating and the wiring is long, the malfunction may occur by noise. Therefore, fully evaluation on the actual PCB is necessary.

TEST CIRCUITS

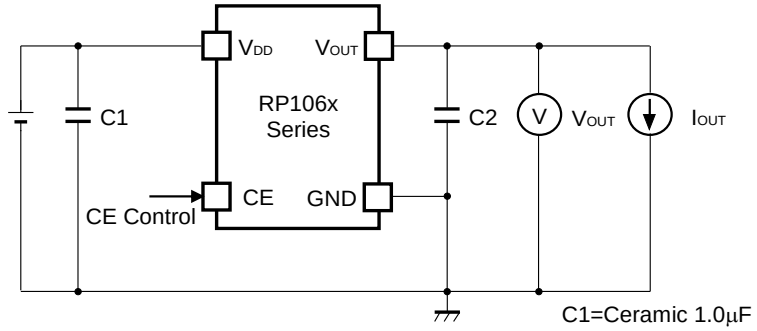

Basic Test Circuit

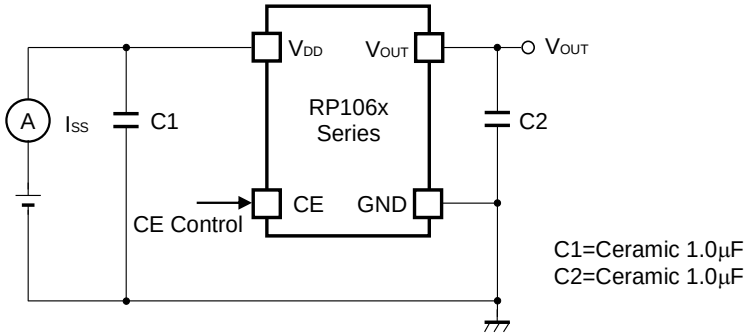

Supply Current Test Circuit

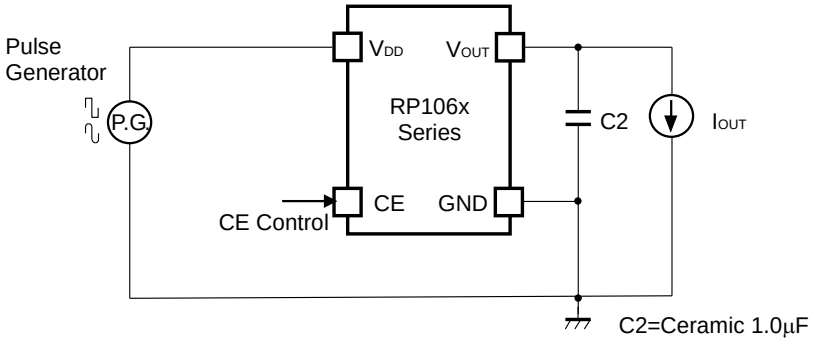

Ripple Rejection Test Circuit

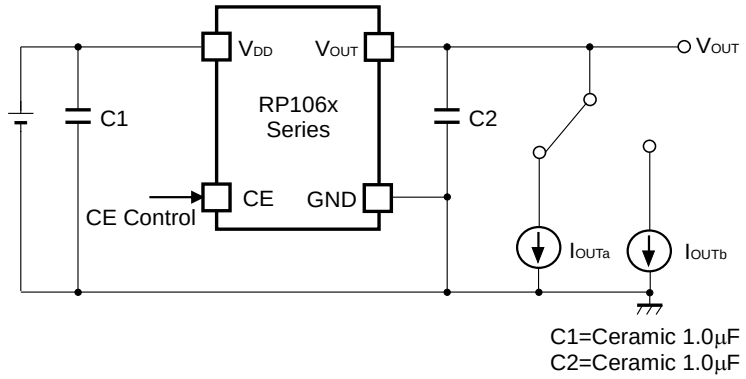

Load Transient Response Test Circuit

CONSTANT SLOPE CIRCUITS

The RP106x Series is equipped with a constant slope circuit as a soft-start circuit, which allows the output voltage to start up gradually when the CE is turned on.

The constant slope circuit minimizes the inrush current at the start-up and also prevents the overshoot of the output voltage.

The capacitor to create the start-up slope is built in the IC that does not require any external components. The start-up time and the start-up slope angle are fixed inside the IC. For more details, please refer to the graph 15 of “Inrush Current Characteristics Example”.

Inrush Current Characteristics Example (C1=1.0µF, Topt=25ºC)

RP106x07xB/D

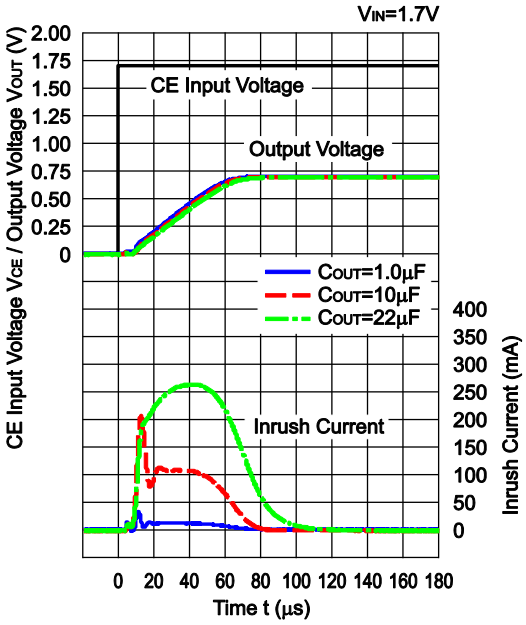

RP106x12xB/D

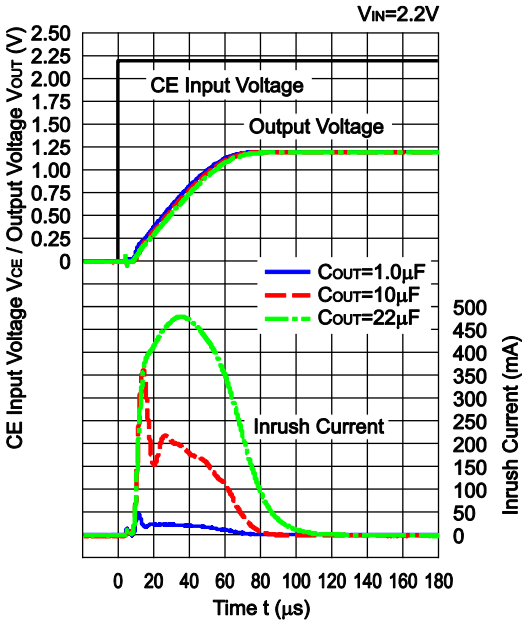

RP106x18xB/D

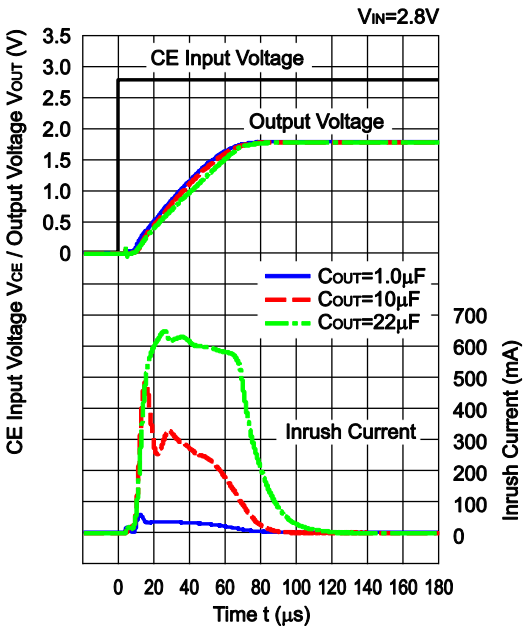

TYPICAL CHARACTERISTICS

1) Output Voltage vs. Output Current (Topt=25°C)

RP106x07xx

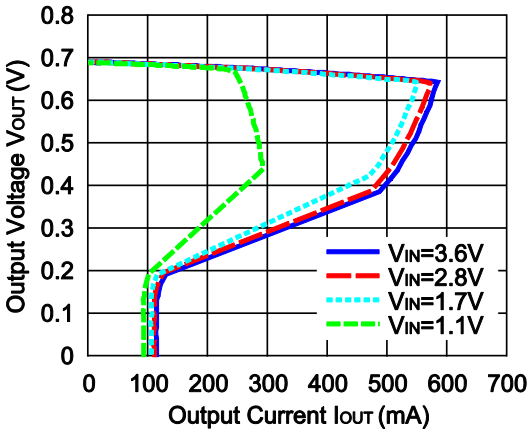

RP106x12xx

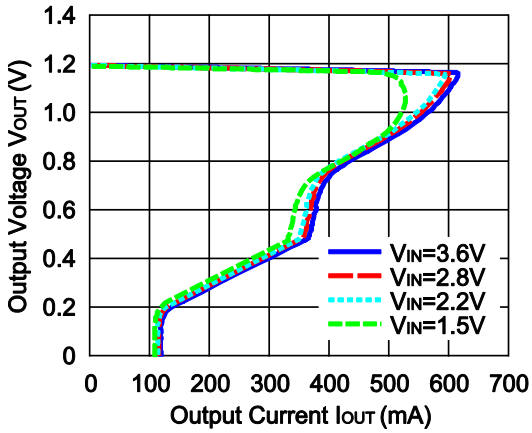

RP106x18xx

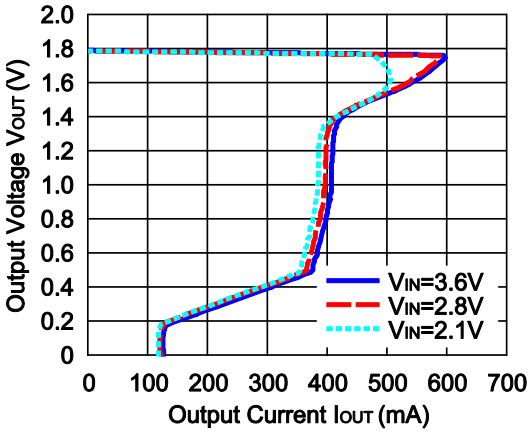

2) Output Voltage vs. Input Voltage (Topt=25°C)

RP106x07xx

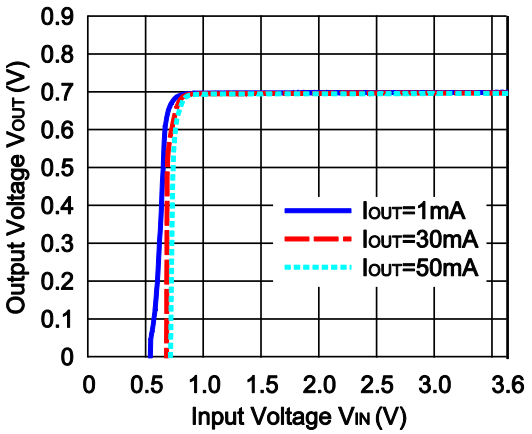

RP106x12xx

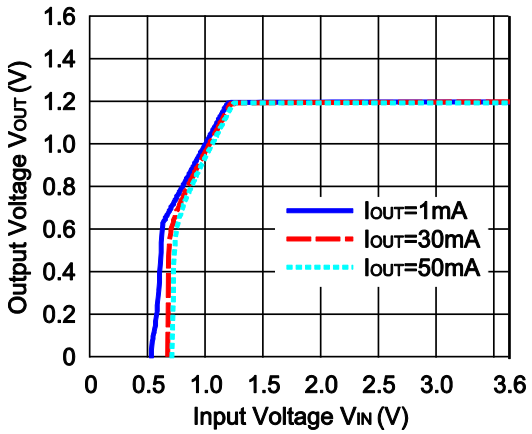

RP106x18xx

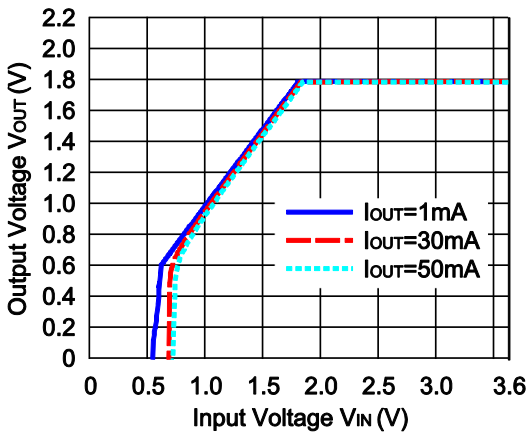

3) Supply Current vs. Input Voltage (Topt=25°C)

RP106x07xx

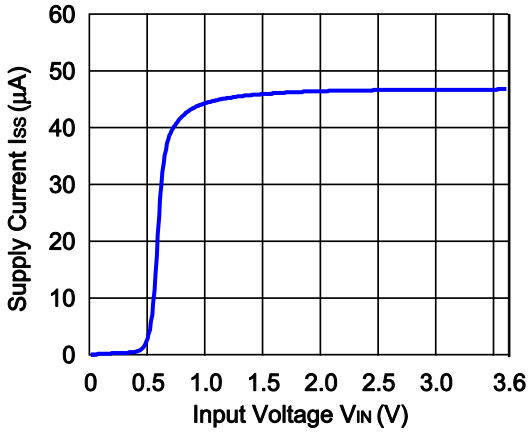

RP106x12xx

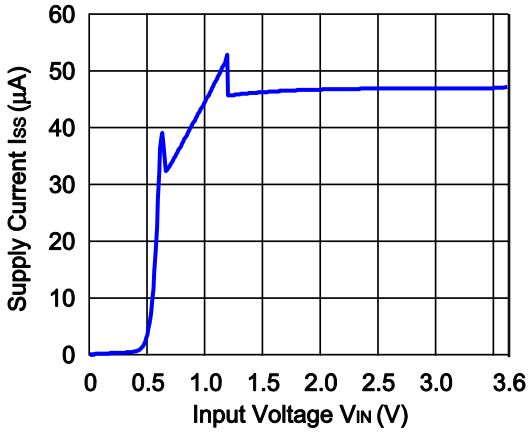

RP106x18xx

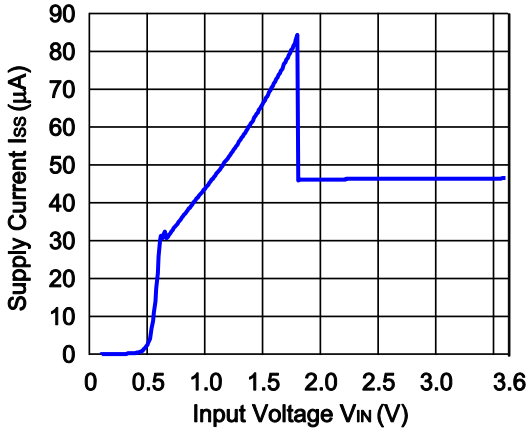

4) Output Voltage vs. Temperature

RP106x07xx

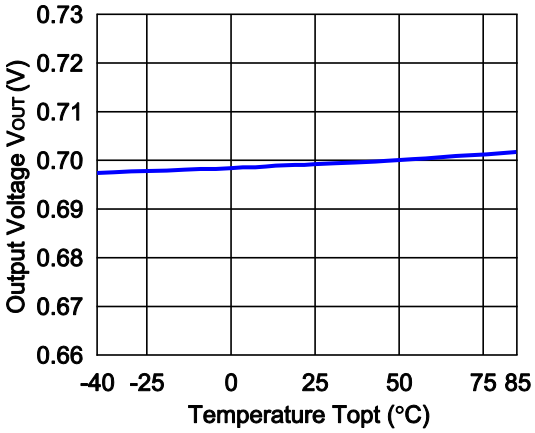

RP106x12xx

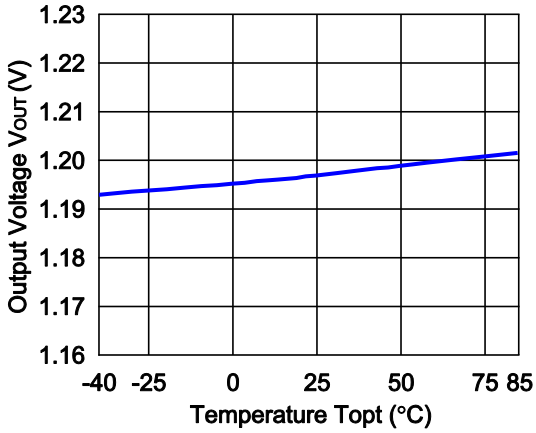

RP106x18xx

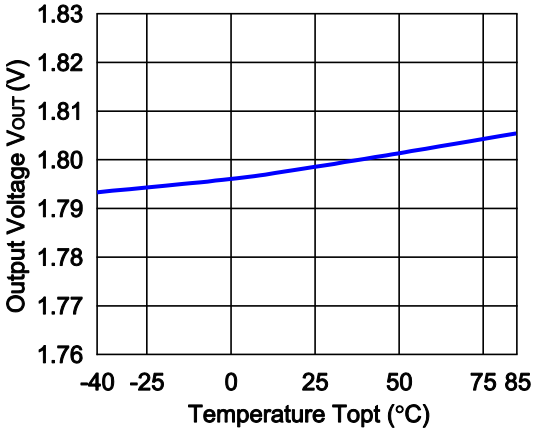

5) Supply Current vs. Temperature

RP106x07xx

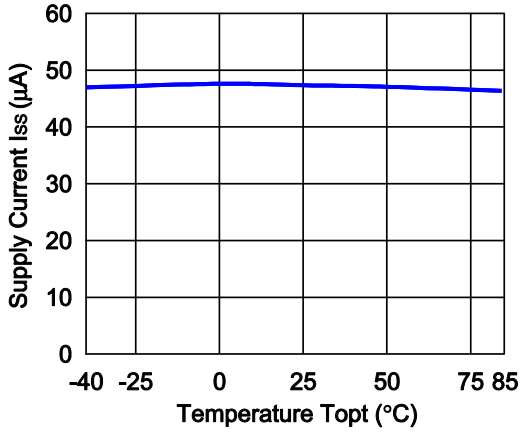

RP106x12xx

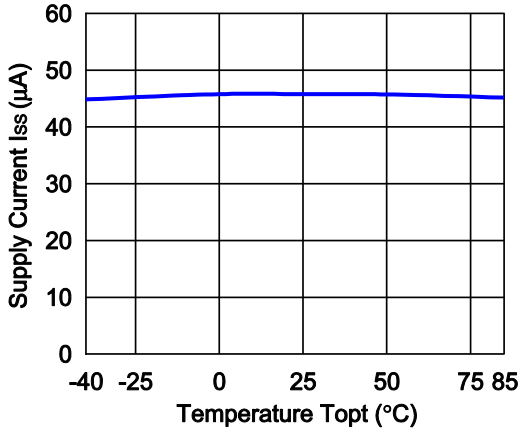

RP106x18xx

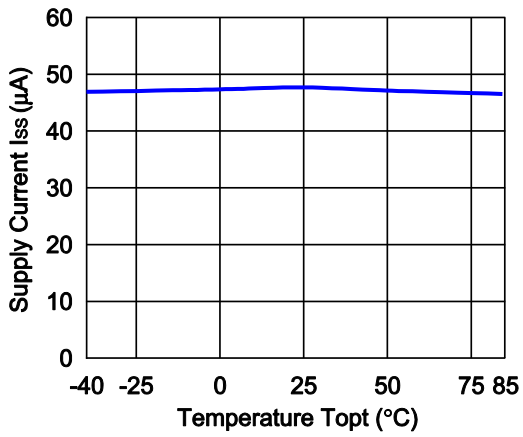

6) Dropout Voltage vs. Output Current

RP106x07xx

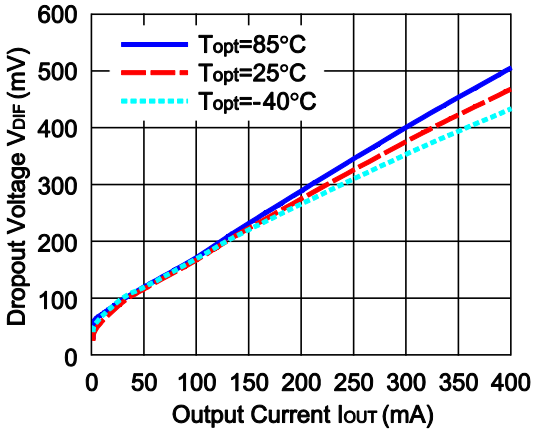

RP106x12xx

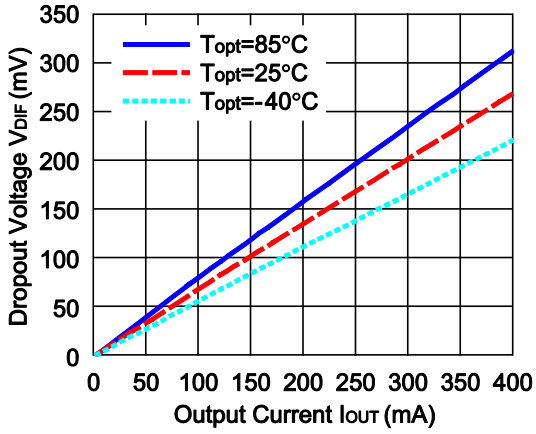

RP106x18xx

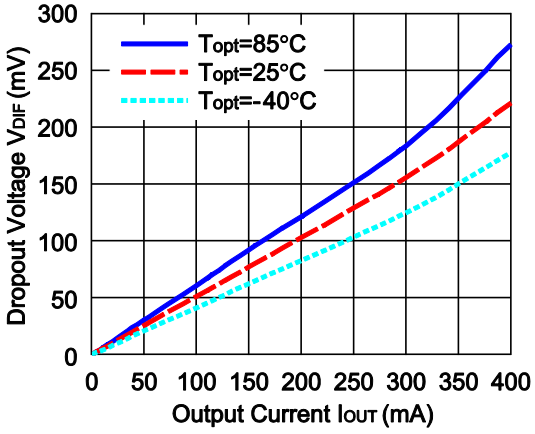

7) Dropout Voltage vs Set Output Voltage (Topt=25°C)

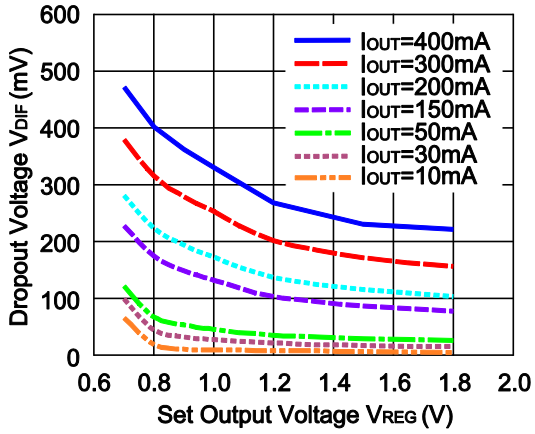

8) Minimum Operating Voltage

RP106x07xx

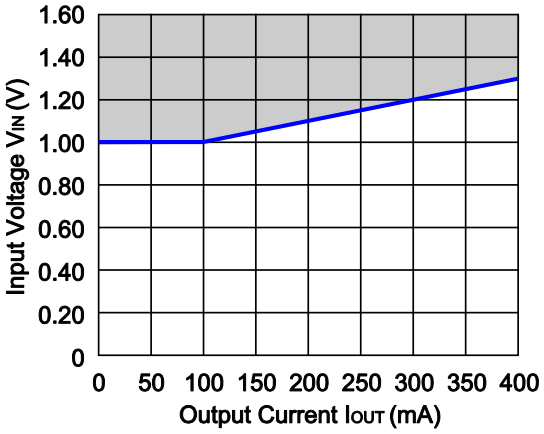

Hatched area is avaiable
for 0.7V output

9) Ripple Rejection vs. Input Bias Voltage (C1=none, C2=1.0µF, Ripple=0.2Vp-p, Topt=25°C)

RP106x07xx

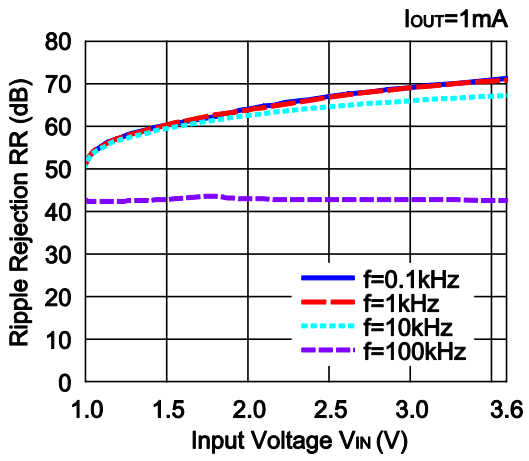

RP106x07xx

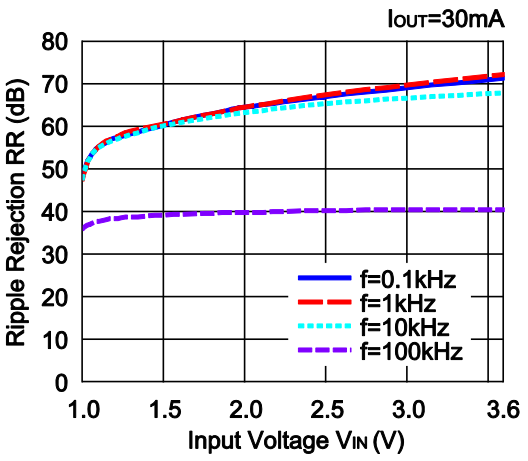

RP106x18xx

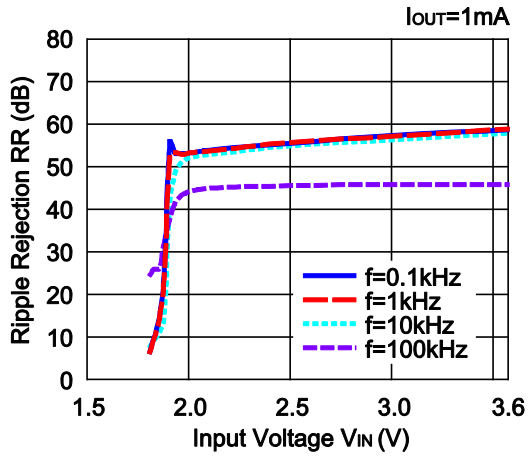

RP106x18xx

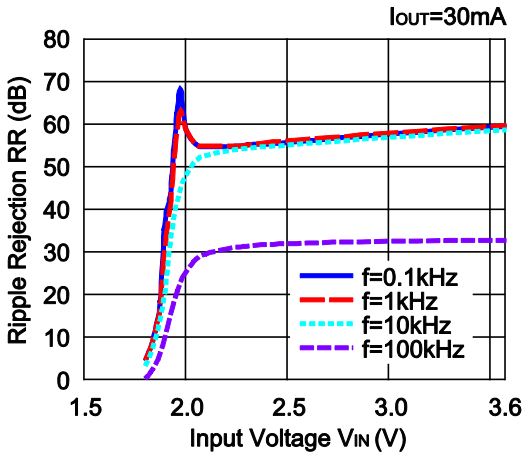

10) Ripple Rejection vs. Frequency (C1=none, C2=1.0µF, Ripple=0.1Vp-p, Topt=25°C)

RP106x07xx

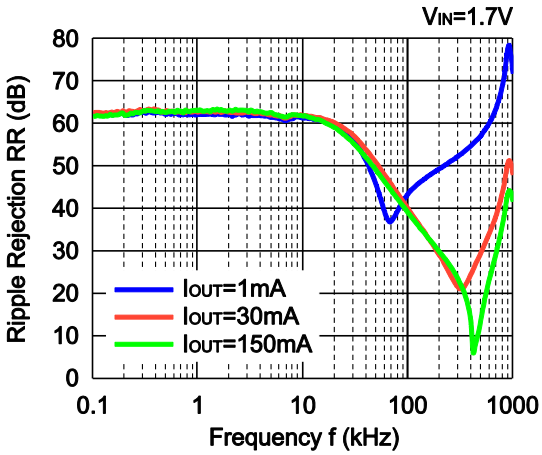

RP106x12xx

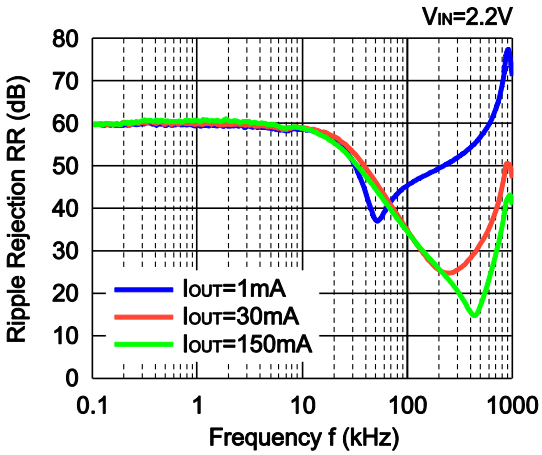

RP106x18xx

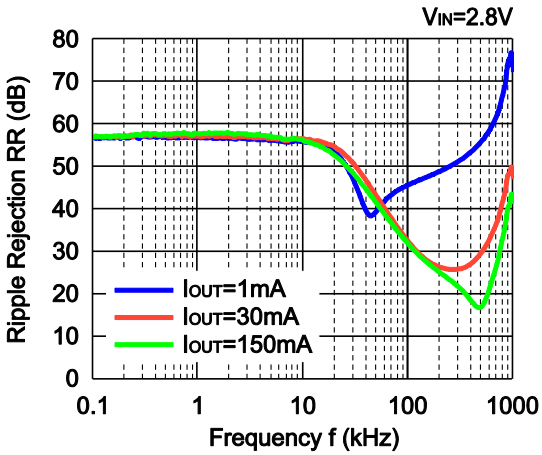

11) Input Transient Response (C1=none, C2=1.0µF, I_{OUT}=30mA, tr=tf=5µs, Topt=25°C)

RP106x07xx

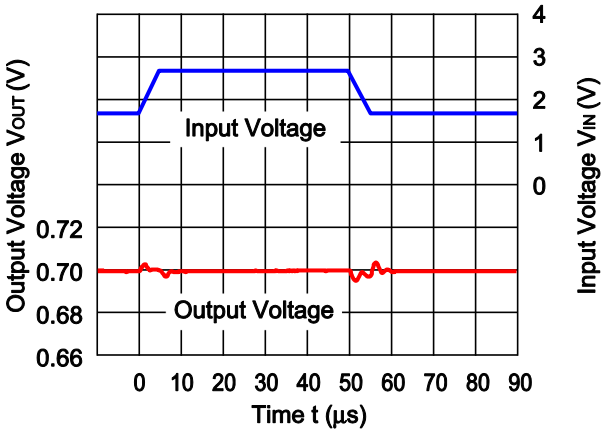

RP106x12xx

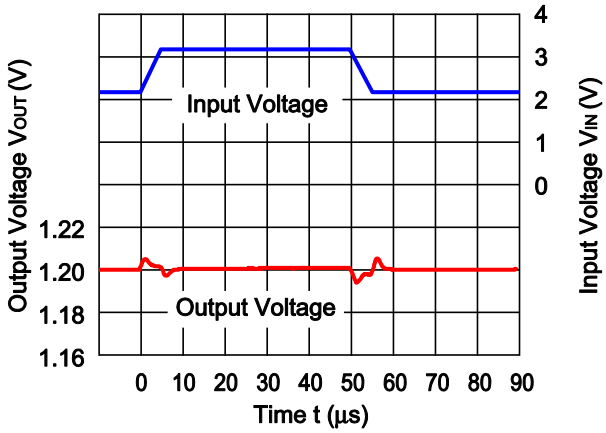

RP106x18xx

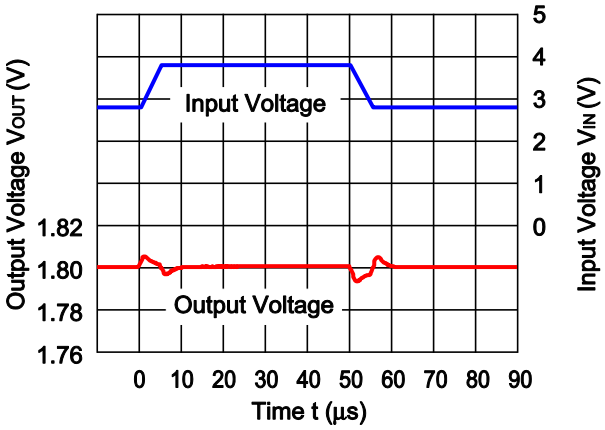

12) Load Transient Response (C1=C2=1.0µF, tr=tf=5µs, Topt=25°C)

RP106x07xx

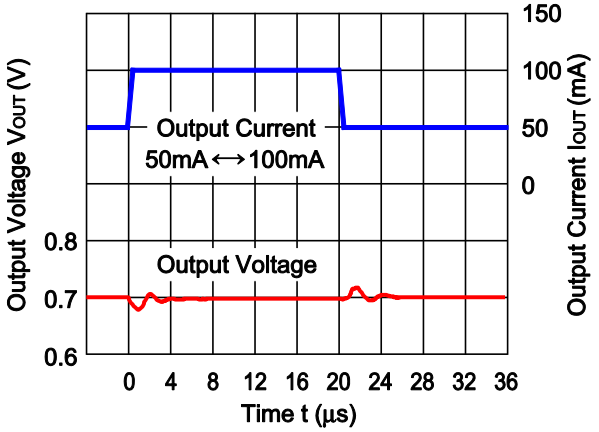

RP106x07xx

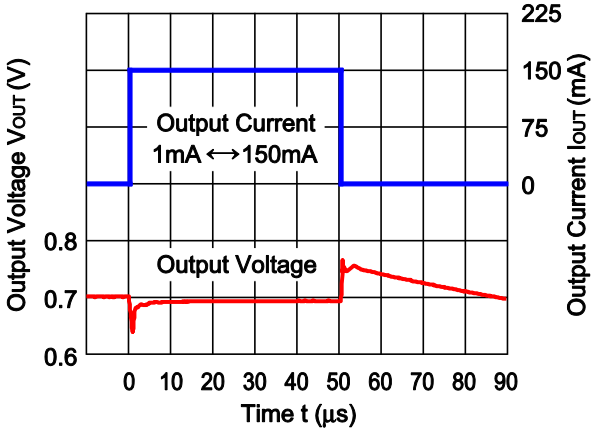

RP106x12xx

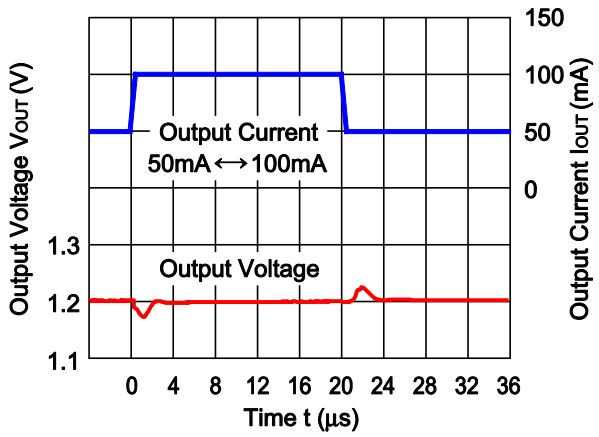

RP106x12xx

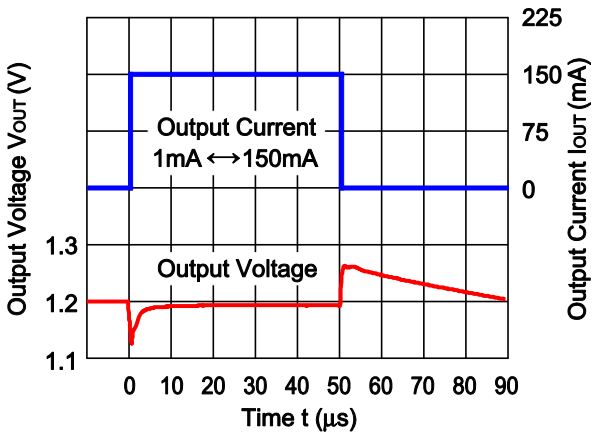

RP106x18xx

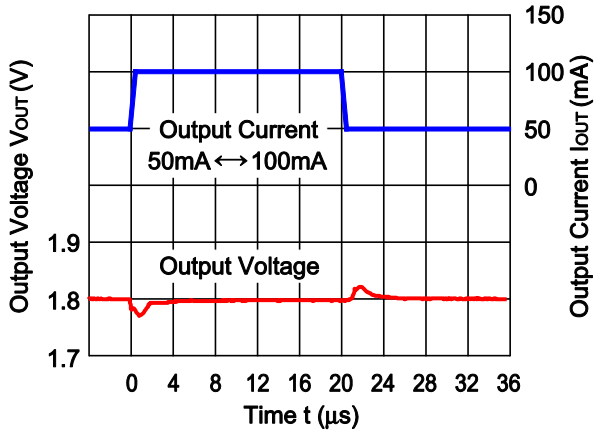

RP106x18xx

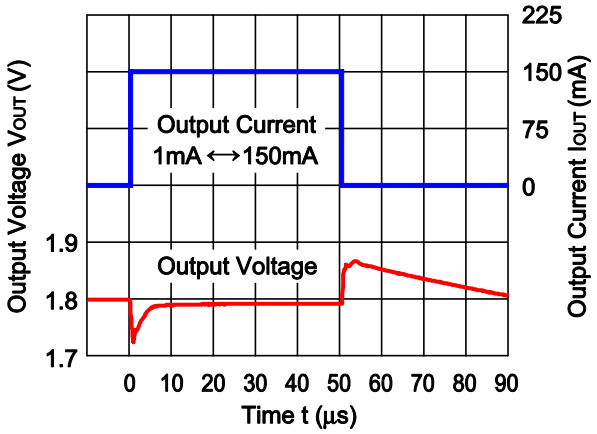

13) Turn On Speed with CE pin (C1=C2=1.0µF, Topt=25°C)

RP106x07xx

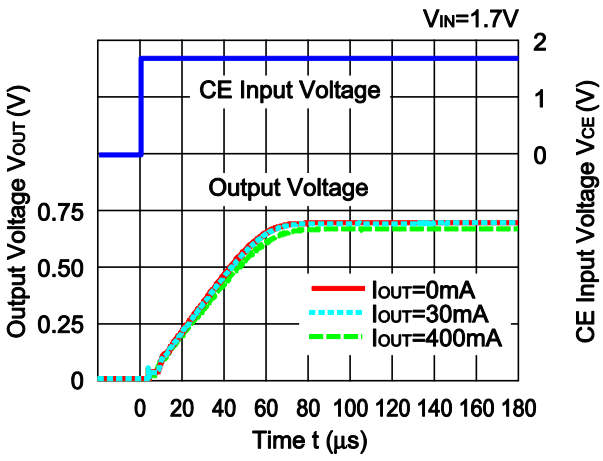

RP106x12xx

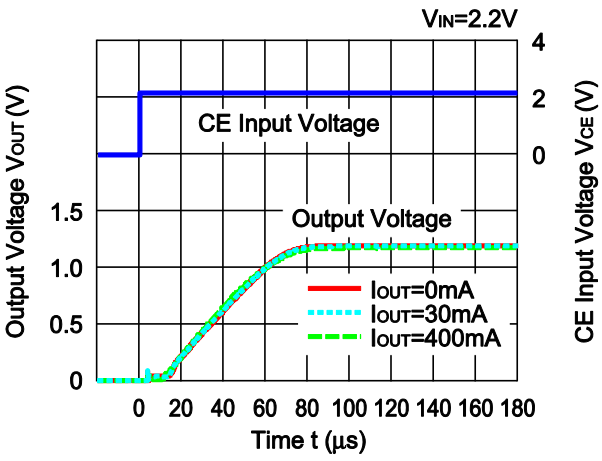

RP106x18xx

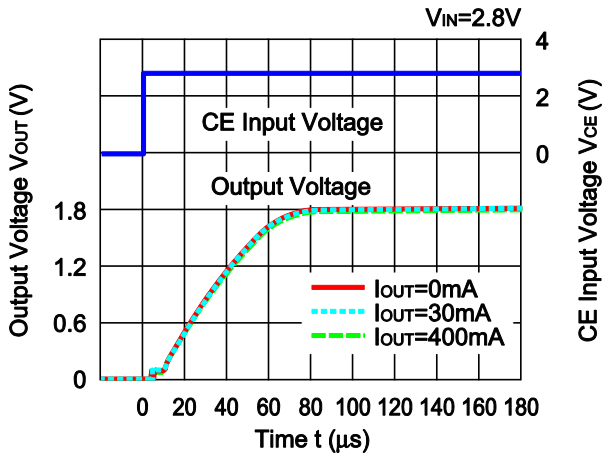

14) Turn Off Speed with CE pin (C1=C2=1.0µF, Topt=25°C)

RP106x07xx

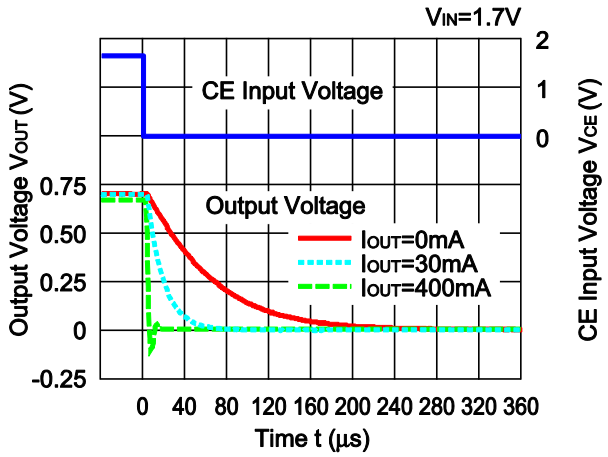

RP106x12xx

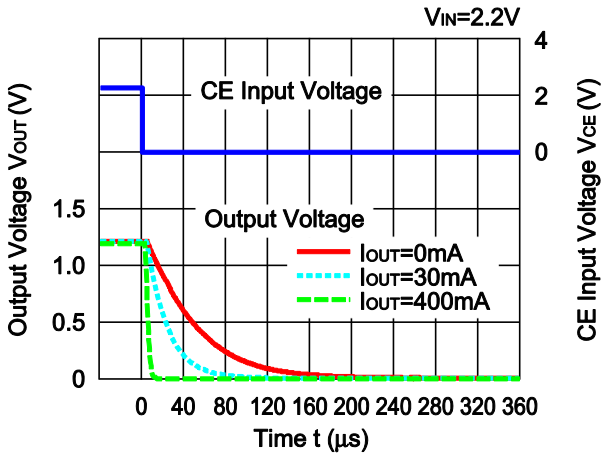

RP106x18xx

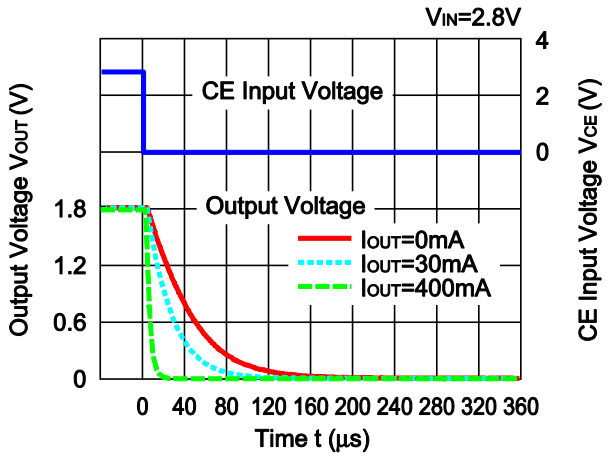

15) Inrush Current at Start up (C1=1.0µF, Topt=25°C)

RP106x07xx

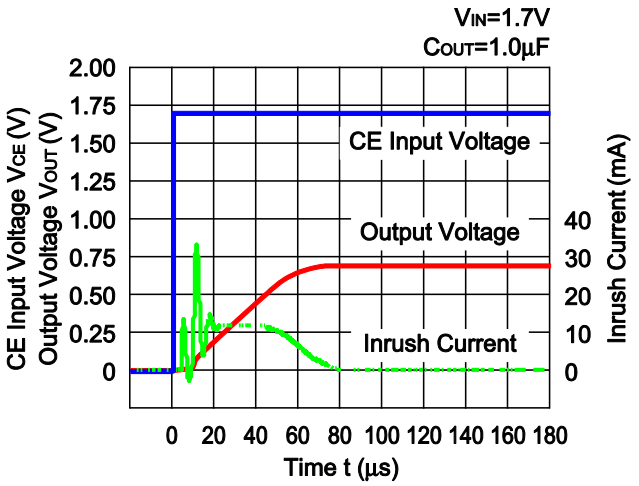

RP106x07xx

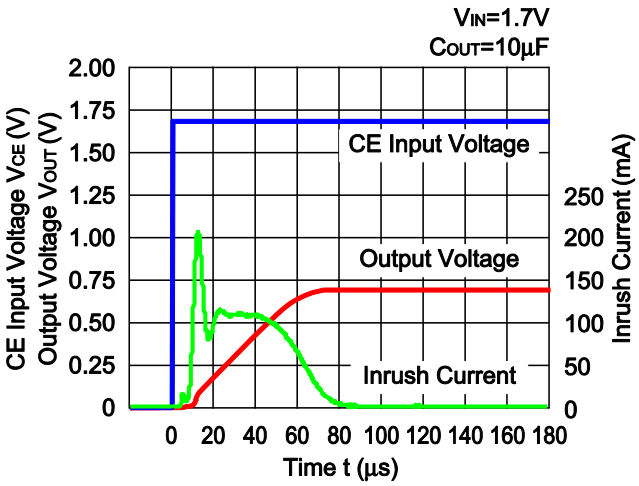

RP106x07xx

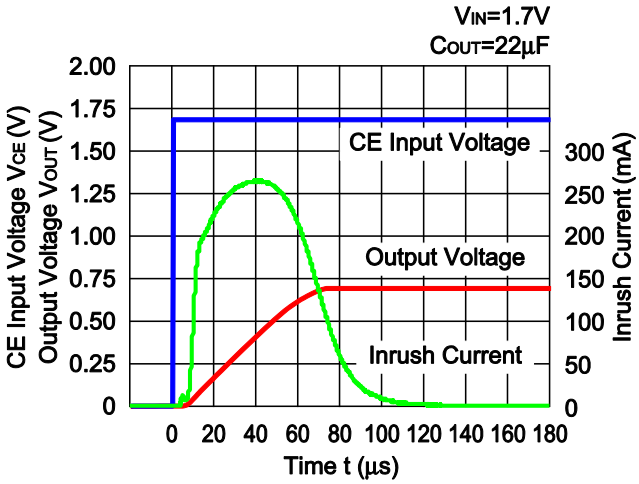

RP106x12xx

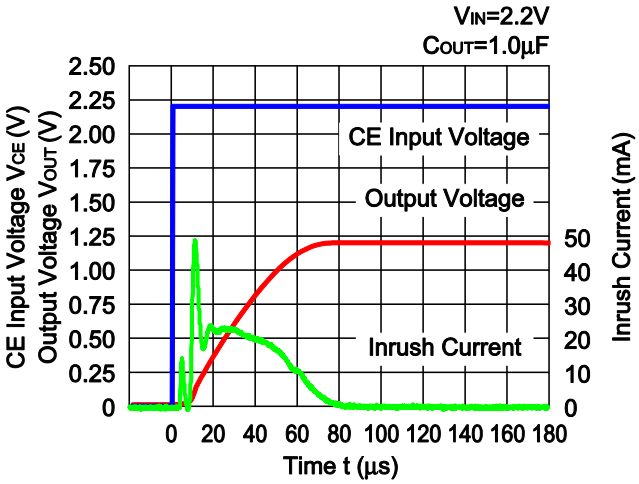

RP106x12xx

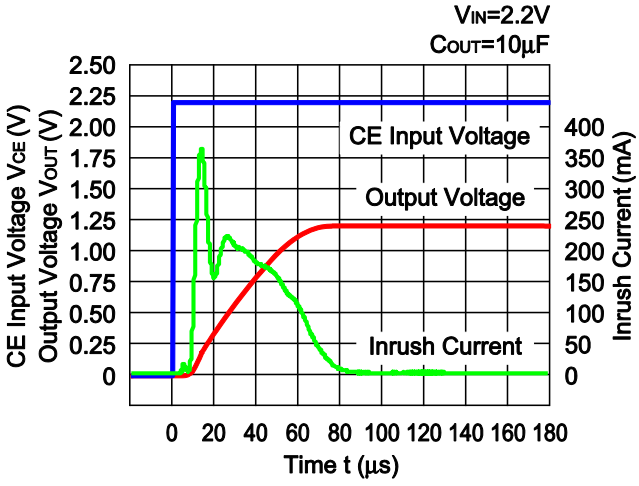

RP106x12xx

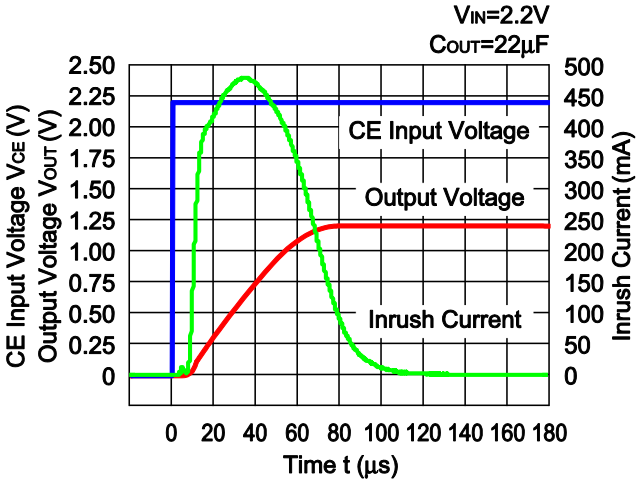

RP106x18xx

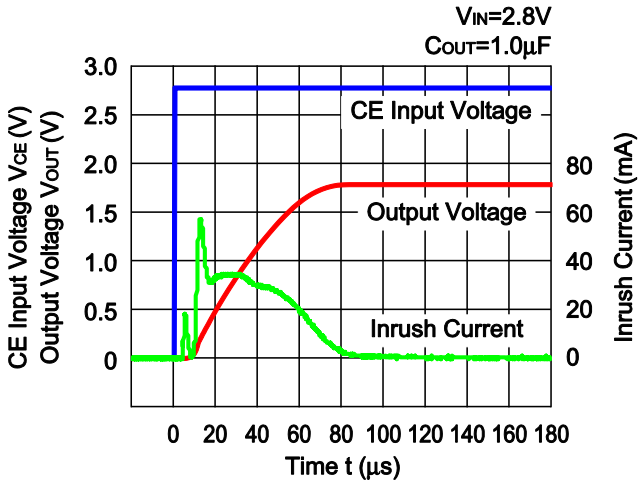

RP106x18xx

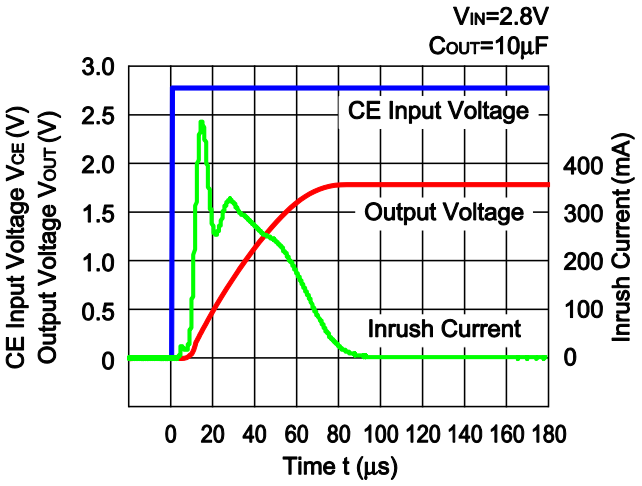

RP106x18xx

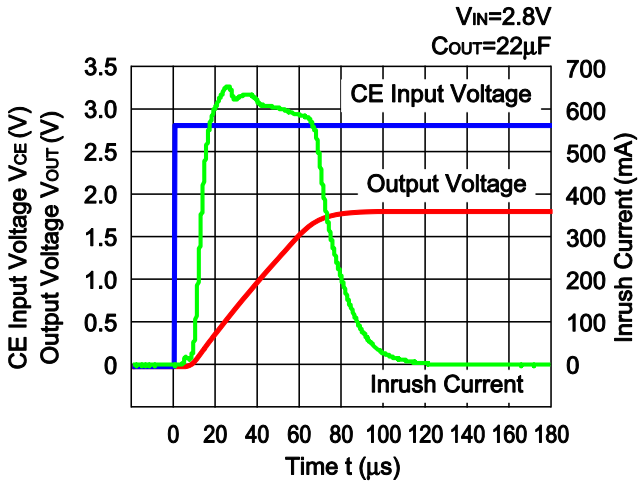

ESR vs. Output Current

When using these ICs, consider the following points:

The relations between I_{OUT} (Output Current) and ESR of an output capacitor are shown below.
The conditions when the white noise level is under 40μV (Avg.) are marked as the hatched area in the graph.

Measurement conditions

Frequency Band: 10Hz to 3MHz
Temperature : –40°C to 85°C
C1, C2 : 1.0μF MURATA GRM155B31A105KE15

If other than ceramic capacitors such as tantalum, the ESR of the capacitor might be higher than expected. This graph shows the stable area with ESR limit. In the actual evaluation, we used Murata GRM155B31A105KE15, therefore, bias characteristics of the same kind of ceramic capacitors are considered.

RP106x07xx

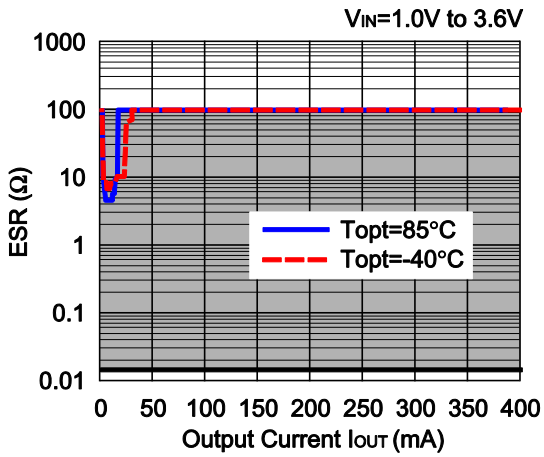

RP106x18xx

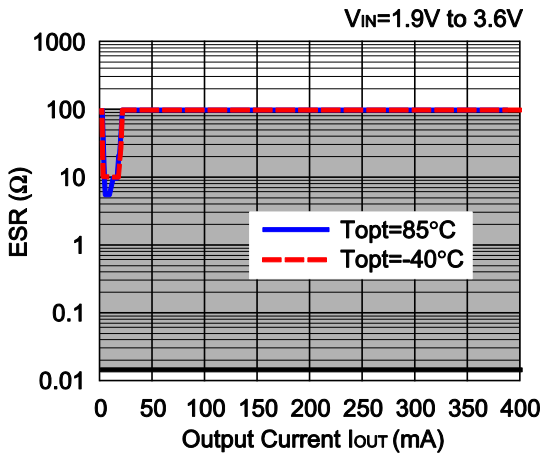

PACKAGE INFORMATION

- **Power Dissipation (WLCSP-4-P5)**

Power Dissipation (P_D) depends on conditions of mounting on board. This specification is based on the measurement at the condition below:

* Measurement Conditions

	Standard Land Pattern
Environment	Mounting on Board (Wind velocity=0m/s)
Board Material	Glass cloth epoxy plastic (Double sided)
Board Dimensions	40mm × 40mm × 1.6mm
Copper Ratio	Top side : Approx. 50% , Back side : Approx. 50%
Through-hole	ϕ 0.5mm × 28pcs

* Measurement Result (Ta=25°C, Tjmax=125°C)

	Standard Land Pattern
Power Dissipation	278mW
Thermal Resistance	θja = (125–25°C)/0.278W = 360°C/W
	θjc = 46°C/W

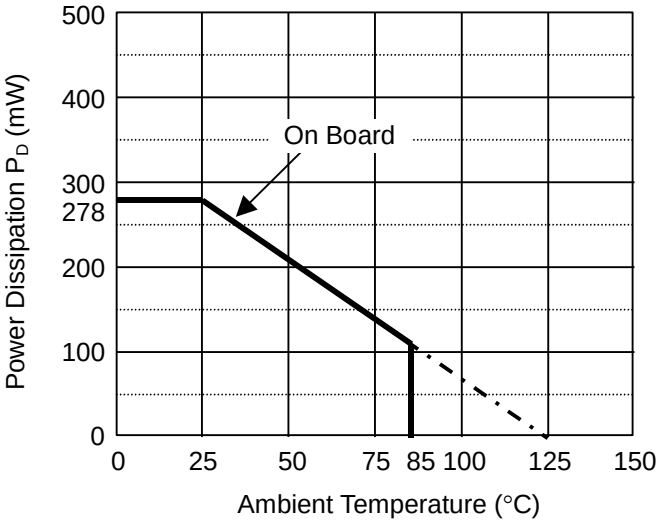

Power Dissipation

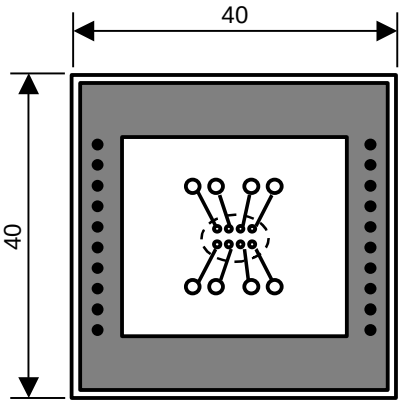

Measurement Board Pattern

IC Mount Aria (Unit : mm)

- **Package Dimensions (WLCSP-4-P5)**

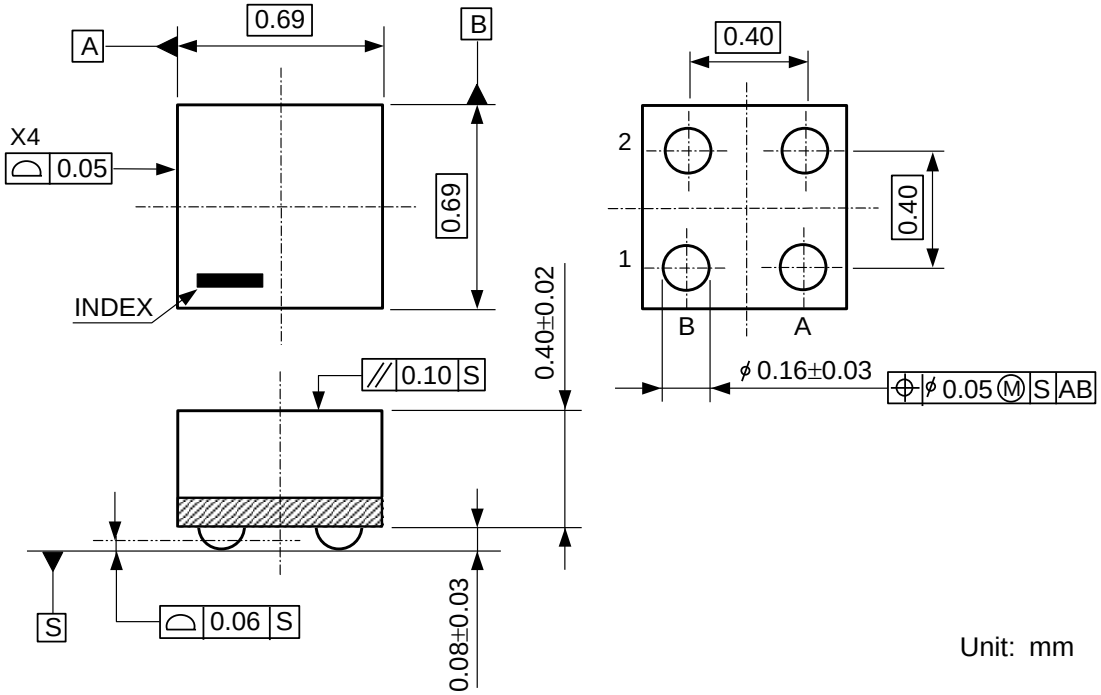

Unit: mm

- **Mark Specification (WLCSP-4-P5)**

①② : Lot No.....Alphanumeric serial number.

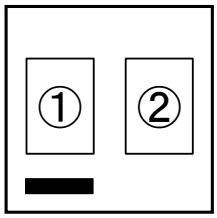

- **RP106Z Series marking list table (WLCSP-4-P5)**

RP106ZxxxB

Product Name	V_{SET}
RP106Z121B	1.2V
RP106Z181B	1.8V

RP106ZxxxD

Product Name	V_{SET}
RP106Z121D	1.2V
RP106Z181D	1.8V

● Power Dissipation (DFN(PL)1212-6)

Power Dissipation (P_D) depends on conditions of mounting on board. This specification is based on the measurement at the condition below:

Measurement Conditions

	Standard Test Land Pattern
Environment	Mounting on Board (Wind velocity=0m/s)
Board Material	Glass cloth epoxy plastic (Double sided)
Board Dimensions	40mm×40mm×1.6mm
Copper Ratio	Top side: Approx. 50%, Back side: Approx. 50%
Through-holes	ϕ 0.54mm×28pcs

Measurement Result (Ta=25°C, Tjmax=125°C)

	Standard Test Land Pattern
Power Dissipation	400mW
Thermal Resistance	θja=(125-25°C)/0.4W=250°C/W
	θjc=67 °C/W

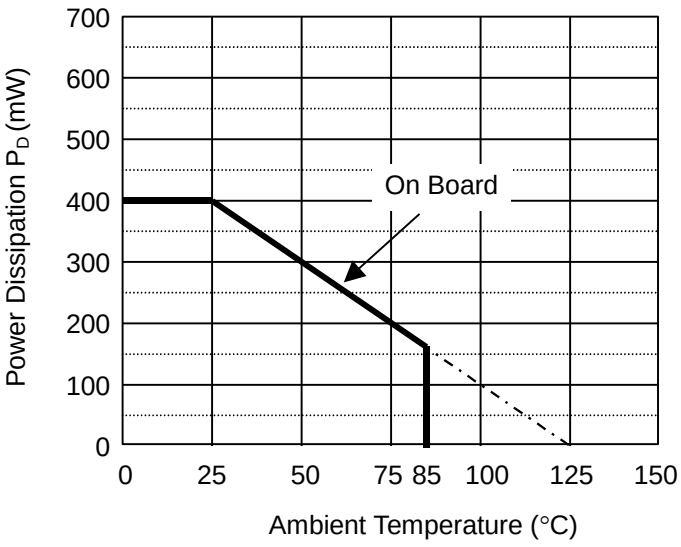

Power Dissipation

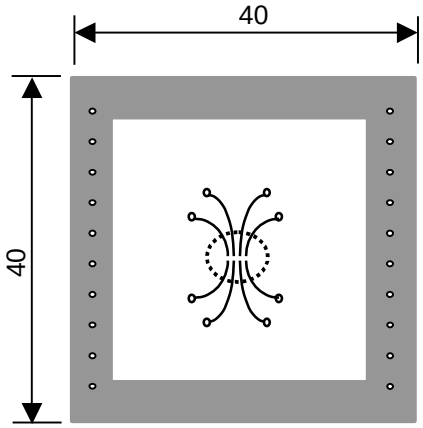

Measurement Board Pattern

IC Mount Area Unit : mm

- **Package Dimensions (DFN(PL)1212-6)**

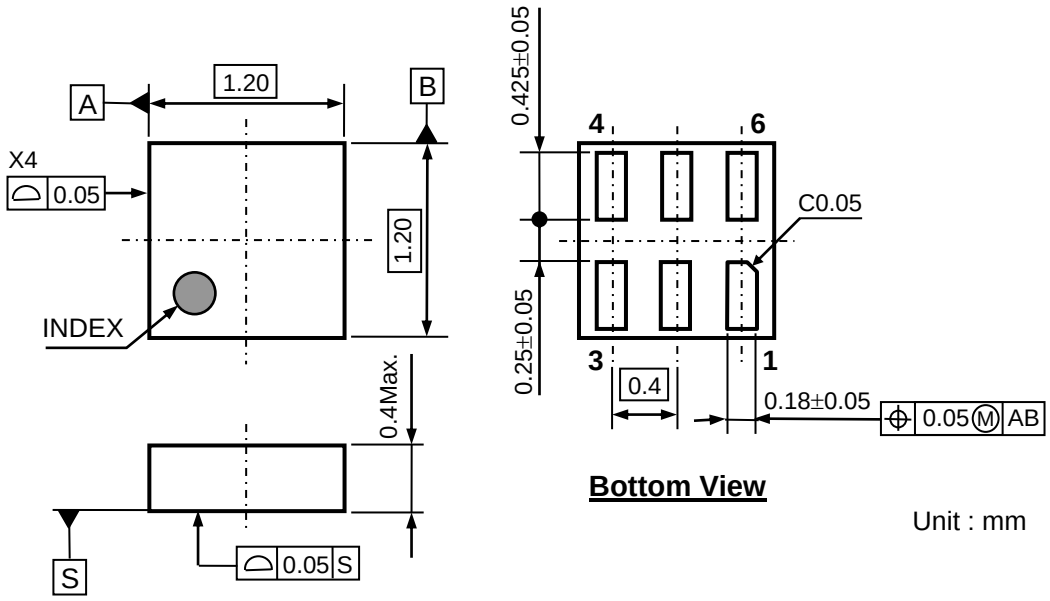

- **Mark Specification (DFN(PL)1212-6)**

①② : Product Code ..... Refer to the marking list table

③④ : Lot No..... Alphanumeric serial number.

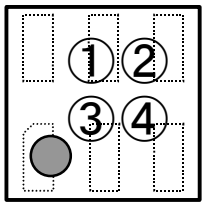

- **RP106K Series marking list table (DFN(PL)1212-6)**

RP106KxxxB

Product Name	①②	V_{SET}
RP106K071B	NA	0.7V
RP106K081B	NB	0.8V
RP106K091B	NC	0.9V
RP106K101B	ND	1.0V
RP106K111B	NE	1.1V
RP106K121B	NF	1.2V
RP106K131B	NG	1.3V
RP106K141B	NH	1.4V
RP106K151B	NJ	1.5V
RP106K161B	NK	1.6V
RP106K171B	NL	1.7V
RP106K181B	NM	1.8V
RP106K101B5	NN	1.05V
RP106K121B5	NP	1.25V
RP106K181B5	NQ	1.85V
RP106K111B5	NR	1.15V
RP106K121B8	NS	1.28V
RP106K171B5	NT	1.75V
RP106K071B5	NU	0.75V

RP106KxxxD

Product Name	①②	V_{SET}
RP106K071D	PA	0.7V
RP106K081D	PB	0.8V
RP106K091D	PC	0.9V
RP106K101D	PD	1.0V
RP106K111D	PE	1.1V
RP106K121D	PF	1.2V
RP106K131D	PG	1.3V
RP106K141D	PH	1.4V
RP106K151D	PJ	1.5V
RP106K161D	PK	1.6V
RP106K171D	PL	1.7V
RP106K181D	PM	1.8V
RP106K101D5	PN	1.05V
RP106K121D5	PP	1.25V
RP106K181D5	PQ	1.85V
RP106K111D5	PR	1.15V
RP106K121D8	PS	1.28V
RP106K171D5	PT	1.75V
RP106K071D5	PU	0.75V

● Power Dissipation (SC-88A)

Power Dissipation (P_D) depends on conditions of mounting on board. This specification is based on the measurement at the condition below;

Measurement Conditions

	Standard Land Pattern
Environment	Mounting on Board (Wind velocity=0m/s)
Board Material	Glass cloth epoxy plastic (Double Layers)
Board Dimensions	40mm×40mm×1.6mm
Copper Ratio	Top side: Approx. 50%, Back side: Approx. 50%
Through-hole	ϕ0.5mm×44pcs

Measurement Result (Ta=25°C, Tjmax=125°C)

	Standard Land Pattern	**Free Air**
Power Dissipation	380mW	150mW
Thermal Resistance	θja=(125-25°C)/0.38W=263°C/W	θja=(125-25°C)/0.15W=667°C/W
	θjc=75°C/W	-

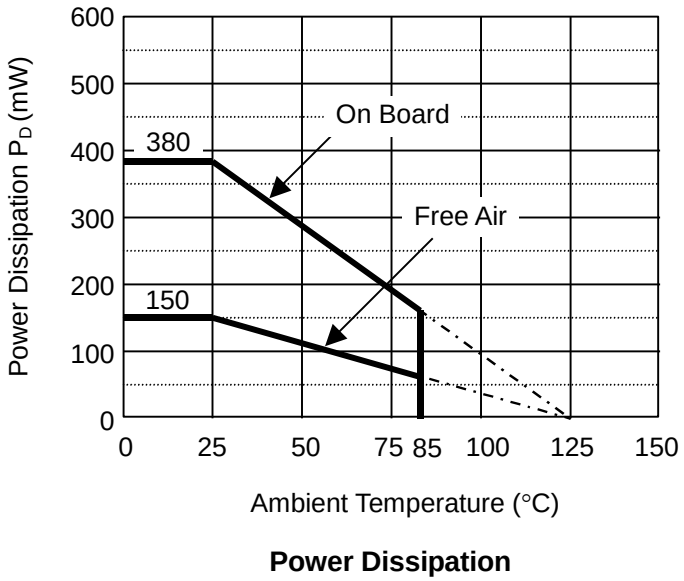

Power Dissipation

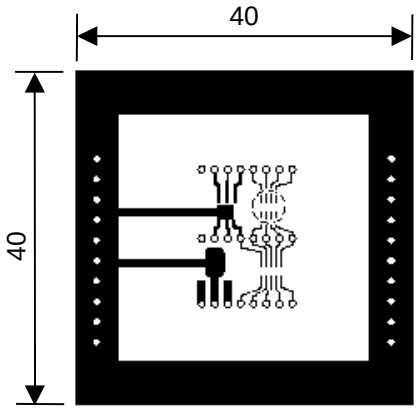

Measurement Board Pattern

IC Mount Area (Unit : mm)

- **Package Dimensions (SC-88A)**

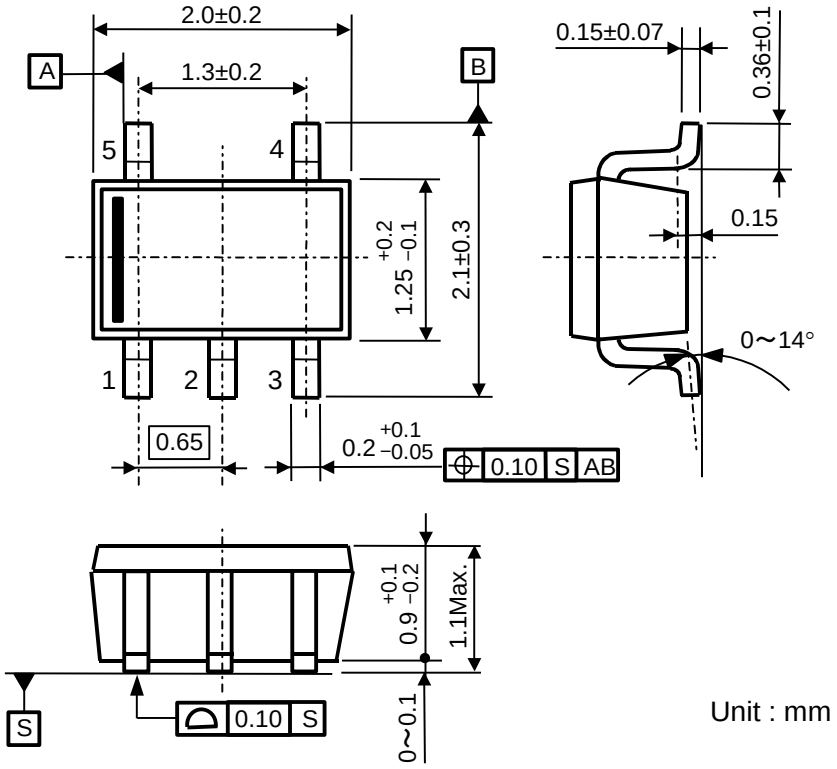

Unit : mm

- **Mark Specification (SC-88A)**

①②③④ : Product Code ..... Refer to the marking list table

⑤⑥ : Lot No ..... Alphanumeric serial number.

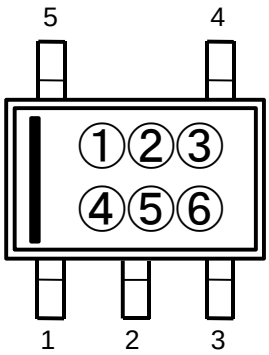

- **RP106Q Series marking list table (SC-88A)**

RP106QxxxB

Product Name	①②③④	V_{SET}
RP106Q072B	Q 0 0 1	0.7V
RP106Q082B	Q 0 0 2	0.8V
RP106Q092B	Q 0 0 3	0.9V
RP106Q102B	Q 0 0 4	1.0V
RP106Q112B	Q 0 0 5	1.1V
RP106Q122B	Q 0 0 6	1.2V
RP106Q132B	Q 0 0 7	1.3V
RP106Q142B	Q 0 0 8	1.4V
RP106Q152B	Q 0 0 9	1.5V
RP106Q162B	Q 0 1 0	1.6V
RP106Q172B	Q 0 1 1	1.7V
RP106Q182B	Q 0 1 2	1.8V
RP106Q102B5	Q 0 1 3	1.05V
RP106Q122B5	Q 0 1 4	1.25V
RP106Q182B5	Q 0 1 5	1.85V
RP106Q112B5	Q 0 1 6	1.15V
RP106Q122B8	Q 0 1 7	1.28V
RP106Q172B5	Q 0 1 8	1.75V
RP106Q072B5	Q 0 1 9	0.75V

RP106QxxxD

Product Name	①②③④	V_{SET}
RP106Q072D	R 0 0 1	0.7V
RP106Q082D	R 0 0 2	0.8V
RP106Q092D	R 0 0 3	0.9V
RP106Q102D	R 0 0 4	1.0V
RP106Q112D	R 0 0 5	1.1V
RP106Q122D	R 0 0 6	1.2V
RP106Q132D	R 0 0 7	1.3V
RP106Q142D	R 0 0 8	1.4V
RP106Q152D	R 0 0 9	1.5V
RP106Q162D	R 0 1 0	1.6V
RP106Q172D	R 0 1 1	1.7V
RP106Q182D	R 0 1 2	1.8V
RP106Q102D5	R 0 1 3	1.05V
RP106Q122D5	R 0 1 4	1.25V
RP106Q182D5	R 0 1 5	1.85V
RP106Q112D5	R 0 1 6	1.15V
RP106Q122D8	R 0 1 7	1.28V
RP106Q172D5	R 0 1 8	1.75V
RP106Q072D5	R 0 1 9	0.75V

● Power Dissipation (SOT-23-5)

Power Dissipation (P_D) depends on conditions of mounting on board. This specification is based on the measurement at the condition below:
(Power Dissipation (SOT-23-5) is substitution of SOT-23-6.)

Measurement Conditions

	Standard Test Land Pattern
Environment	Mounting on Board (Wind velocity=0m/s)
Board Material	Glass cloth epoxy plastic (Double sided)
Board Dimensions	40mm×40mm×1.6mm
Copper Ratio	Top side: Approx. 50%, Back side: Approx. 50%
Through-holes	ϕ 0.5mm×44pcs

Measurement Result (Ta=25°C, Tjmax=125°C)

	Standard Land Pattern	Free Air
Power Dissipation	420mW	250mW
Thermal Resistance	θja=(125-25°C)/0.42W=238°C/W	400°C/W

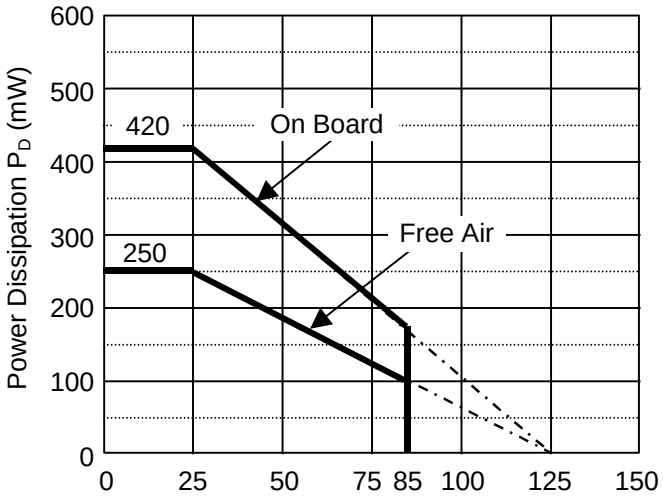

Power Dissipation

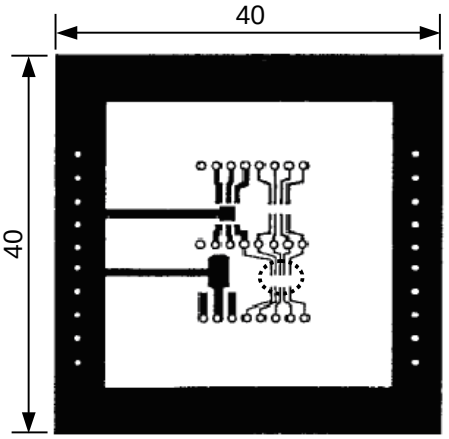

Measurement Board Pattern

IC Mount Area (Unit: mm)

- **Package Dimensions (SOT-23-5)**

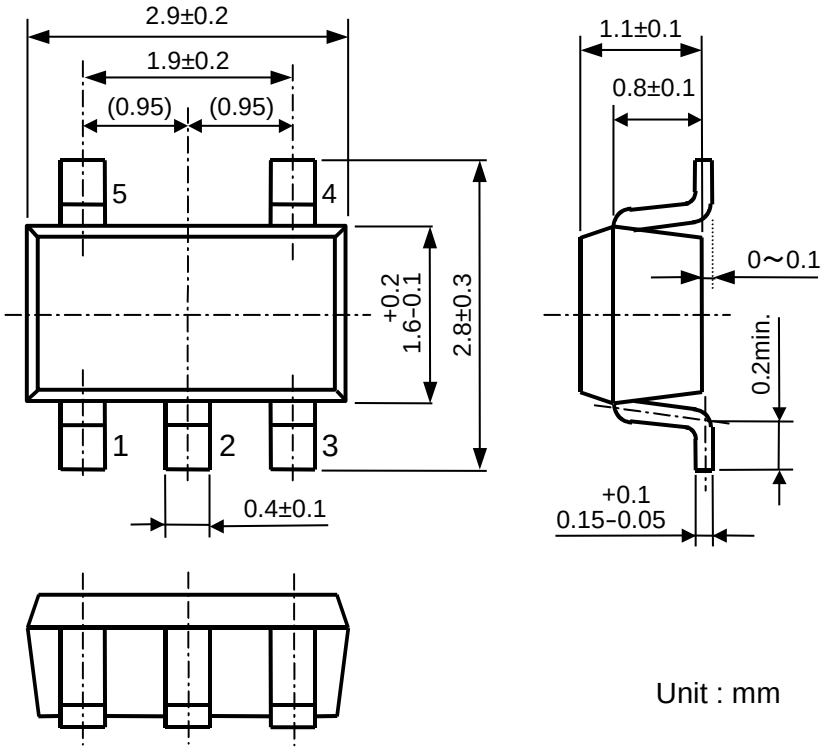

Unit : mm

- **Mark Specification (SOT-23-5)**

①②③ : Product Code ..... Refer to the marking list table

④⑤ : Lot No..... Alphanumeric serial number.

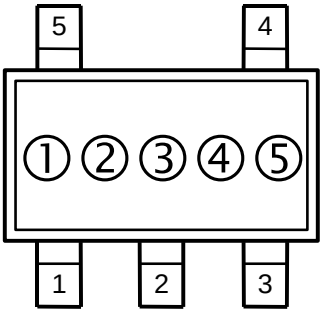

- **RP106N Series marking list table (SOT-23-5)**

RP106NxxxB

Product Name	①②③	V_{SET}
RP106N071B	C A A	0.7V
RP106N081B	C A B	0.8V
RP106N091B	C A C	0.9V
RP106N101B	C A D	1.0V
RP106N111B	C A E	1.1V
RP106N121B	C A F	1.2V
RP106N131B	C A G	1.3V
RP106N141B	C A H	1.4V
RP106N151B	C A J	1.5V
RP106N161B	C A K	1.6V
RP106N171B	C A L	1.7V
RP106N181B	C A M	1.8V
RP106N101B5	C A N	1.05V
RP106N121B5	C A P	1.25V
RP106N181B5	C A Q	1.85V
RP106N111B5	C A R	1.15V
RP106N121B8	C A S	1.28V
RP106N171B5	C A T	1.75V
RP106N071B5	C A U	0.75V

RP106NxxxD

Product Name	①②③	V_{SET}
RP106N071D	C B A	0.7V
RP106N081D	C B B	0.8V
RP106N091D	C B C	0.9V
RP106N101D	C B D	1.0V
RP106N111D	C B E	1.1V
RP106N121D	C B F	1.2V
RP106N131D	C B G	1.3V
RP106N141D	C B H	1.4V
RP106N151D	C B J	1.5V
RP106N161D	C B K	1.6V
RP106N171D	C B L	1.7V
RP106N181D	C B M	1.8V
RP106N101D5	C B N	1.05V
RP106N121D5	C B P	1.25V
RP106N181D5	C B Q	1.85V
RP106N111D5	C B R	1.15V
RP106N121D8	C B S	1.28V
RP106N171D5	C B T	1.75V
RP106N071D5	C B U	0.75V

No.	Inspection Items	Inspection Criteria	Figure
1	Package chipping	A≥0.2mm is rejected B≥0.2mm is rejected C≥0.2mm is rejected And, Package chipping to Si surface and to bump is rejected.	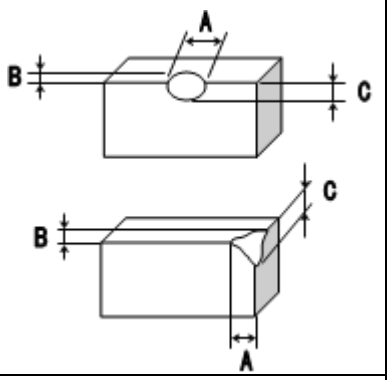
2	Si surface chipping	A≥0.2mm is rejected B≥0.2mm is rejected C≥0.2mm is rejected But, even if A≥0.2mm, B≤0.1mm is acceptable.	
3	No bump	No bump is rejected.	
4	Marking miss	To reject incorrect marking, such as another product name marking or another lot No. marking.	
5	No marking	To reject no marking on the package.	
6	Reverse direction of marking	To reject reverse direction of marking character.	
7	Defective marking	To reject unreadable marking. (Microscope: X15/ White LED/ Viewed from vertical direction)	
8	Scratch	To reject unreadable marking character by scratch. (Microscope: X15/ White LED/ Viewed from vertical direction)	
9	Stain and Foreign material	To reject unreadable marking character by stain and foreign material. (Microscope: X15/ White LED/ Viewed from vertical direction)	

1. The products and the product specifications described in this document are subject to change or discontinuation of production without notice for reasons such as improvement. Therefore, before deciding to use the products, please refer to our sales representatives for the latest information thereon.
2. The materials in this document may not be copied or otherwise reproduced in whole or in part without the prior written consent of us.
3. This product and any technical information relating thereto are subject to complementary export controls (so-called KNOW controls) under the Foreign Exchange and Foreign Trade Law, and related politics ministerial ordinance of the law. (Note that the complementary export controls are inapplicable to any application-specific products, except rockets and pilotless aircraft, that are insusceptible to design or program changes.) Accordingly, when exporting or carrying abroad this product, follow the Foreign Exchange and Foreign Trade Control Law and its related regulations with respect to the complementary export controls.
4. The technical information described in this document shows typical characteristics and example application circuits for the products. The release of such information is not to be construed as a warranty of or a grant of license under our or any third party's intellectual property rights or any other rights.
5. The products listed in this document are intended and designed for use as general electronic components in standard applications (office equipment, telecommunication equipment, measuring instruments, consumer electronic products, amusement equipment etc.). Those customers intending to use a product in an application requiring extreme quality and reliability, for example, in a highly specific application where the failure or misoperation of the product could result in human injury or death should first contact us.
    - Aerospace Equipment
    - Equipment Used in the Deep Sea
    - Power Generator Control Equipment (nuclear, steam, hydraulic, etc.)
    - Life Maintenance Medical Equipment
    - Fire Alarms / Intruder Detectors
    - Vehicle Control Equipment (automotive, airplane, railroad, ship, etc.)
    - Various Safety Devices
    - Traffic control system
    - Combustion equipment

    In case your company desires to use this product for any applications other than general electronic equipment mentioned above, make sure to contact our company in advance. Note that the important requirements mentioned in this section are not applicable to cases where operation requirements such as application conditions are confirmed by our company in writing after consultation with your company.
6. We are making our continuous effort to improve the quality and reliability of our products, but semiconductor products are likely to fail with certain probability. In order to prevent any injury to persons or damages to property resulting from such failure, customers should be careful enough to incorporate safety measures in their design, such as redundancy feature, fire containment feature and fail-safe feature. We do not assume any liability or responsibility for any loss or damage arising from misuse or inappropriate use of the products.
7. The products have been designed and tested to function within controlled environmental conditions. Do not use products under conditions that deviate from methods or applications specified in this datasheet. Failure to employ the products in the proper applications can lead to deterioration, destruction or failure of the products. We shall not be responsible for any bodily injury, fires or accident, property damage or any consequential damages resulting from misuse or misapplication of the products.
8. Quality Warranty
    8-1. Quality Warranty Period
    In the case of a product purchased through an authorized distributor or directly from us, the warranty period for this product shall be one (1) year after delivery to your company. For defective products that occurred during this period, we will take the quality warranty measures described in section 8-2. However, if there is an agreement on the warranty period in the basic transaction agreement, quality assurance agreement, delivery specifications, etc., it shall be followed.
    8-2. Quality Warranty Remedies
    When it has been proved defective due to manufacturing factors as a result of defect analysis by us, we will either deliver a substitute for the defective product or refund the purchase price of the defective product.
    Note that such delivery or refund is sole and exclusive remedies to your company for the defective product.
    8-3. Remedies after Quality Warranty Period
    With respect to any defect of this product found after the quality warranty period, the defect will be analyzed by us. On the basis of the defect analysis results, the scope and amounts of damage shall be determined by mutual agreement of both parties. Then we will deal with upper limit in Section 8-2. This provision is not intended to limit any legal rights of your company.
9. Anti-radiation design is not implemented in the products described in this document.
10. The X-ray exposure can influence functions and characteristics of the products. Confirm the product functions and characteristics in the evaluation stage.
11. WLCSP products should be used in light shielded environments. The light exposure can influence functions and characteristics of the products under operation or storage.
12. Warning for handling Gallium and Arsenic (GaAs) products (Applying to GaAs MMIC, Photo Reflector). These products use Gallium (Ga) and Arsenic (As) which are specified as poisonous chemicals by law. For the prevention of a hazard, do not burn, destroy, or process chemically to make them as gas or power. When the product is disposed of, please follow the related regulation and do not mix this with general industrial waste or household waste.
13. Please contact our sales representatives should you have any questions or comments concerning the products or the technical information.

NISSHINBO

Nisshinbo Micro Devices Inc.

Official website
https://www.nisshinbo-microdevices.co.jp/en/

Purchase information
https://www.nisshinbo-microdevices.co.jp/en/buy/

ENTEGRECİ

Bu belge www.entegreci.com üzerinden sunulmaktadır.

Elektronik komponent tedarikinde Entegreci

Entegreci, Eskişehir merkezli, Türkiye geneline satış yapan bir elektronik komponent mağazasıdır. Entegreler (IC), mikrodenetleyiciler, transistörler, diyotlar, pasif elemanlar, konnektörler, modüller ve geliştirme kartları tek adetten seri üretim adetlerine kadar satılır. Ürün sayfalarında güncel stok durumunu, fiyatı ve datasheet bağlantısını bulabilirsiniz.

Parça koduyla arama

Üretici parça numarasını yazın; stok ve fiyatı hemen görün.

www.entegreci.com

Ürün kategorileri

Entegreden kapasitöre tüm elektronik komponent kategorileri.

Kategorilere göz atın

Üreticiler

Aradığınız üreticinin ürünlerini tek sayfada inceleyin.

Üreticileri görün

Toplu alım ve teklif

Listede olmayan ya da yüksek adetli parçalar için teklif isteyin.

Teklif isteyin

www.entegreci.com | **destek@entegreci.com** | **0850 305 90 34**

Entegreci is an online electronic components store based in Türkiye. Search by manufacturer part number to see stock, prices and datasheets for integrated circuits, microcontrollers, transistors, passive components and connectors, or request a quote for parts that are not listed.

Bu sayfa Entegreci tarafından eklenmiştir. Belgenin önceki sayfaları asıl yayıncısına aittir ve içeriği değiştirilmemiştir; en güncel sürüm için belgenin yayıncısına başvurun.