Low Input Voltage 3A LDO Regulator

NO.EA-203-201216

OUTLINE

The RP108J is a CMOS-based voltage regulator IC featuring 3A output with low ON-resistance.

The RP108J consists of a voltage reference unit, an error amplifier, resistor-net for voltage setting, a fold-back protection circuit, and a thermal shutdown circuit. The RP108J features both low supply current and high output current, and the dropout voltage is much smaller than bi-polar's. The minimum input voltage is as low as 1.6V and the output voltage can be set from 0.8V, therefore it can be connected with the DC/DC converter as the latter power supply for high density LSI that is operated by low output voltage.

The output voltage of RP108J081x is externally adjustable by using external divide resistors. The CE pin of the RP108J can switch the regulator to standby mode. In addition to a fold-back protection circuit, which is already built in the conventional regulators, The RP108J contains a thermal shutdown circuit, a constant slope circuit as a soft-start function and a reverse current protection circuit. Ceramic capacitors can be used.

FEATURES

- Output Current ..... Min. 3A
- Supply Current ..... Typ. 350μA
- Standby Current ..... Typ. 2μA
- Input Voltage Range ..... 1.6V to 5.25V
- Output Voltage Range ..... Fixed Output Voltage Type: 0.8V to 4.2V (0.1V steps)
  * Refer to *MARK INFORMATIONS* for other voltages.
  Adjustable Output Voltage Type: 0.8V to 4.2V
- Output Voltage Accuracy ..... ±1.0% (±15mV accuracy, When V_{SET} ≤ 1.5V)
- Output Voltage Temperature-drift Coefficient ..... Typ. ±100ppm/°C
- Ripple Rejection ..... Typ. 65dB (f = 1kHz, V_{SET} = 2.8V)
- Dropout Voltage ..... Typ. 0.51V (V_{SET}=2.8V)
- Line Regulation ..... Typ. 0.1%/V
- Package TO-252-5-P2
- Built-in Fold-back Protection Circuit ..... Typ. 220mA
- Built-in Thermal Shutdown Circuit ..... Stops at 165°C
- Built-in Constant Slope Circuit
- Built-in Reverse Current Protection Circuit
- Ceramic capacitors are recommended to be used with this IC ····· 10μF or more

APPLICATIONS

- Power source for battery-powered equipments.
- Power source for portable communication equipments such as cameras and VCRs.
- Power source for electrical home appliances.

BLOCK DIAGRAMS

RP108Jxx1B/E

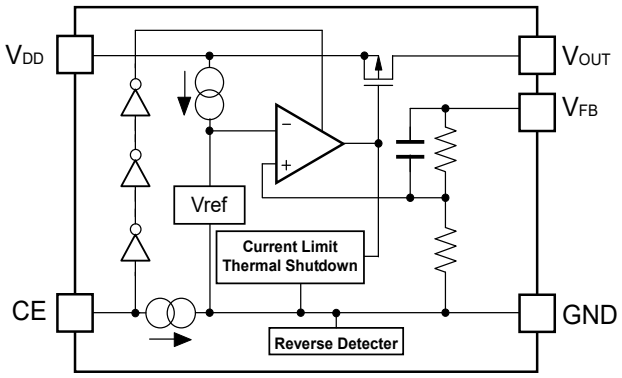

RP108Jxx1D/F

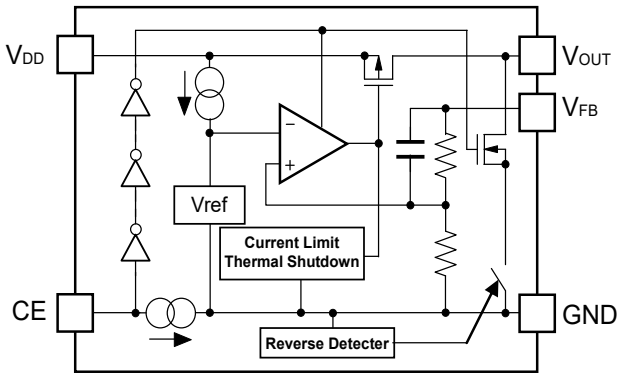

SELECTION GUIDE

The output voltage, auto discharge function, and the soft-start time for the ICs can be selected at the user's request.

Product Name	Package	Quantity per Reel	Pb Free	Halogen Free
RP108Jxx1∗(y) -T1-FE	TO-252-5-P2	3,000 pcs	Yes	Yes

xx: The set output voltage (V_{SET}) can be designated in the range of 0.8V(08) to 4.2V(42) in 0.1V steps.
y: If the output voltage includes the 3rd digit, indicate the digit of 0.01V.
(1.25V, 1.85V, 2.85V)
Ex. If the output voltage is 1.25V, RP108J121∗5-T1-FE.
If the output voltage is 1.85V, RP108J181∗5-T1-FE.
If the output voltage is 2.85V, RP108J281∗5-T1-FE.

∗: Designation of auto-discharge function at off state and the soft-start time
(B) No auto-discharge function, soft start time typ. 180 µs
(D) Auto-discharge function, soft start time typ. 180 µs
(E) No auto-discharge function, soft start time typ. 570 µs
(F) Auto-discharge function, soft start time typ. 570 µs

Auto-discharge function quickly lowers the output voltage to 0V, when the chip enable signal is switched from the active mode to the standby mode, by releasing the electrical charge accumulated in the external capacitor.
Refer to *CONSTANT SLOPE CIRCUIT* for detailed information on the difference of soft-start time and its effect.

PIN DESCRIPTIONS

TO-252-5-P2

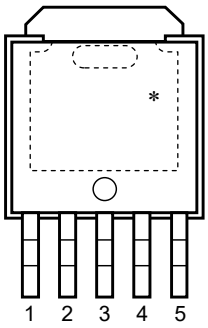

TO-252-5-P2

Pin No.	Symbol	Description
1	CE	Chip Enable Pin ("H" Active)
2	V_{DD}	Input Pin
3	GND	Ground Pin
4	V_{OUT}	Output Pin
5	V_{FB}	Feedback Pin

*1 The tab on the bottom of the package enhances thermal performance and is electrically connected to GND (substrate level). It is recommended that the tab be connected to the ground plane on the board, or otherwise be left floating.

The V_{OUT} pin should be connected to the V_{FB} pin when using RP108J as an internal fixed output voltage type.

In case of using RP108J as an external adjustable type, please refer to "Adjustable Output Voltage Type Settings".

ABSOLUTE MAXIMUM RATINGS

Symbol	Item		Rating	Unit
V_{IN}	Input Voltage		6.0	V
V_{CE}	Input Voltage (CE Input Pin)		−0.3 to 6.0	V
V_{FB}	Input Voltage (V_{FB} Pin)		−0.3 to 6.0	V
V_{OUT}	Output Voltage		−0.3 to V_{IN}+0.3	V
P_D	Power Dissipation (TO-252-5-P2)*1	High Wattage Land Pattern	3800	mV
		Standard Land Pattern	1900	
Ta	Operating Temperature		−40 to 85	°C
Tstg	Storage Temperature		−55 to 125	°C

*1 For Power Dissipation, please refer to *PACKAGE INFORMATION*.

ABSOLUTE MAXIMUM RATINGS

Electronic and mechanical stress momentarily exceeded absolute maximum ratings may cause the permanent damages and may degrade the life time and safety for both device and system using the device in the field. The functional operation at or over these absolute maximum ratings are not assured.

ELECTRICAL CHARACTERISTICS

V_{IN} = V_{SET} +1.0V, I_{OUT} =1mA, C_{IN} = C_{OUT} = 10µF, unless otherwise noted.
The specifications surrounded by [ ] are guaranteed by design engineering at - 40°C ≤ Ta ≤85°C.

RP108Jxx1B/D/E/F (Ta=25°C)

Symbol	Item	Conditions		Min.	Typ.	Max.	Unit
V_{OUT}	Output Voltage	Ta = 25ºC	V_{SET} > 1.5V	×0.99		×1.01	V
			V_{SET} ≤ 1.5V	-15		15	mV
		-40ºC ≤ Ta ≤ 85ºC	V_{SET} > 1.5V	[×0.97]		[×1.02]	V
			V_{SET} ≤ 1.5V	[-45]		[30]	mV
I_{LIM}	Output Current Limit			[3.0]			A
ΔV_{OUT}/ ΔI_{OUT}	Load regulation	1mA ≤ I_{OUT} ≤ 300mA		[-15]	2.0	[20]	mV
		1mA ≤ I_{OUT} ≤ 3000mA		[-70]	3.0	[50]	
V_{DIF}	Dropout Voltage	Please refer to *Dropout Voltage* on the next page.					
I_{SS}	Supply Current	I_{OUT} = 0mA			350	[500]	µA
Istandby	Standby Current	V_{CE} = 0V			2.0	5.0	µA
ΔV_{OUT} /ΔV_{IN}	Line Regulation	V_{SET} +0.5V ≤ V_{IN} ≤ 5.25V, I_{OUT}=1mA (When V_{SET} ≤ 1.1V, V_{IN} = 1.6V)			0.10	[0.15]	%/V
V_{IN}	Input Voltage*1			[1.6]		[5.25]	V
RR	Ripple Rejection	f = 1kHz, Ripple 0.2Vp-p I_{OUT} =100mA	V_{SET} ≤ 2.8V		65		dB
			V_{SET} > 2.8V		55		dB
ΔV_{OUT} /ΔTa	Output Voltage Temperature Coefficient	-40°C ≤ Ta ≤ 85ºC			±100		ppm /ºC
I_{SC}	Short Current Limit	V_{OUT} = 0V			220		mA
I_{PD}	CE Pull-down Current				0.3	[0.6]	µA
V_{CEH}	CE Input Voltage "H"			[1.0]			V
V_{CEL}	CE Input Voltage "L"					[0.4]	V
en	Output Noise	BW = 10Hz to 100kHz			70		µVrms
T_{TSD}	Thermal Shutdown Temperature	Junction Temperature			165		ºC
T_{TSR}	Thermal Shutdown Released Temperature	Junction Temperature			95		ºC
R_{LOW}	Auto-discharge Nch Tr. ON Resistance (D/F version)	V_{IN} = 4.0V, V_{CE} = 0V			30		Ω
I_{REV}	Reverse Current Limit	V_{OUT} > 0.5V, 0V ≤ V_{IN} ≤ 5.25V			10		µA

All test items listed under *Electrical Characteristics* are done under the pulse load condition (Tj ≈ Ta = 25ºC) except Ripple Rejection, Output Voltage Temperature Coefficient, Output Noise and Thermal Shutdown.

*1 The maximum input voltage listed under *Electrical Characteristics* is 5.25V. If for any reason the input voltage exceeds 5.25V, it has to be no more than 5.5V with 500 cumulative operating hours.

The specifications surrounded by ☐ are guaranteed by design engineering at - 40°C ≤ Ta ≤85°C.

Dropout Voltage by Output Voltage

(Ta=25°C)

Output Voltage V_{SET} (V)	Dropout Voltage V_{DIF} (V)		
	Condition	Typ.	Max.
0.8 ≤ V_{SET} < 0.9	I_{OUT}=3000mA	0.910	1.110
0.9 ≤ V_{SET} < 1.0		0.865	1.000
1.0 ≤ V_{SET} < 1.1		0.810	0.950
1.1 ≤ V_{SET} < 1.2		0.755	0.895
1.2 ≤ V_{SET} < 1.5		0.720	0.840
1.5 ≤ V_{SET} < 2.5		0.630	0.760
2.5 ≤ V_{SET} < 3.3		0.510	0.600
3.3 ≤ V_{SET} ≤ 4.2		0.480	0.560

RECOMMENDED OPERATING CONDITIONS (ELECTRICAL CHARACTERISTICS)

All of electronic equipment should be designed that the mounted semiconductor devices operate within the recommended operating conditions. The semiconductor devices cannot operate normally over the recommended operating conditions, even if when they are used over such conditions by momentary electronic noise or surge. And the semiconductor devices may receive serious damage when they continue to operate over the recommended operating conditions.

TYPICAL APPLICATIONS

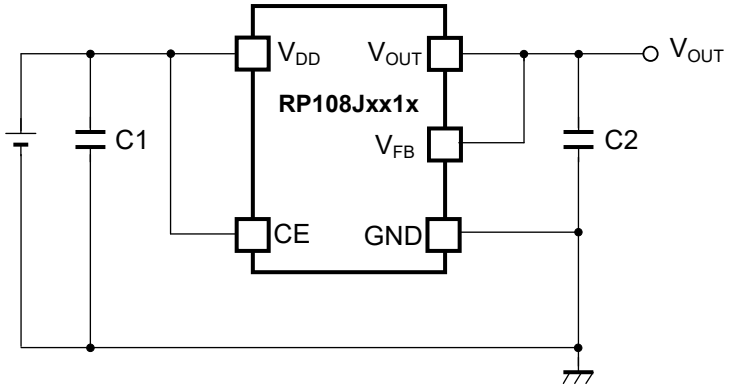

Typical Application

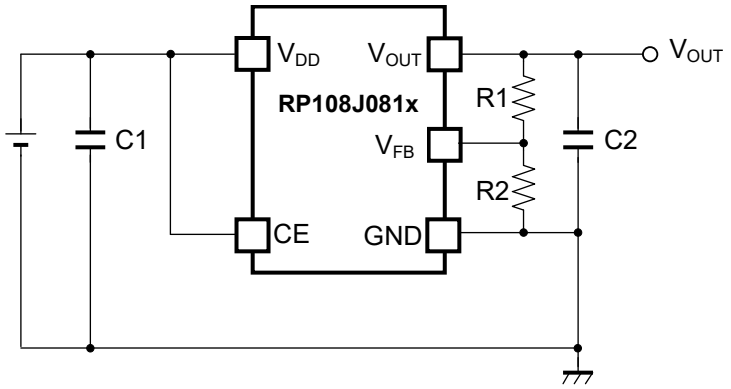

Typical application for adjustable output voltage type

External Components :

Symbol	Descriptions
C1, C2	10μF (Ceramic), CM21X7R106M06AB, KYOCERA

TECHNICAL NOTES

When using the RP108J as an internally fixed output voltage type, please connect the V_{OUT} pin to the V_{FB} pin. However, when using it as the Adjustable Output Voltage Type, The output voltage of the externally adjustable output voltage type should be set to 4.2V or less. Also, total resistors value of R1 and R2 should be 20kΩ or less.

Phase Compensation

In the IC, phase compensation is made for securing stable operation even if the load current is varied. For this purpose, use a 10µF or more capacitor C2.

In case of using a tantalum capacitor and its ESR is large, the output may be unstable. Therefore, select C2 carefully considering its frequency characteristics.

The recommended temperature characteristics for C1 and C2 capacitors are the followings.

- B Characteristics: Temperature range from −25°C to 85°C, Capacitance change of ±10%
- X5R Characteristics: Temperature range from −55°C to 85°C, Capacitance change of ±15%
- X7R Characteristics: Temperature range from −55°C to 125°C, Capacitance change of ±15%

The recommended capacitor's tolerable voltage is twice as large as the voltage of use (C1: Input voltage, C2: Output voltage). The upper limit of the capacitance value for C2 is 100µF.

However, the increase of C2 leads to the increase of inrush current. Refer to *CONSTANT SLOPE CIRCUIT* for detailed information.

PCB Layout

Make V_{DD} and GND lines sufficient. If their impedance is high, noise pickup or unstable operation may result.

Connect a capacitor C1 with a capacitance value as much as 10µF or more between V_{DD} and GND pin, and as close as possible to the pins.

Set external components, especially the output capacitor C2, as close as possible to the ICs and make wiring as short as possible.

Transient Response

When using the Adjustable Output Voltage Type, the transient response could be affected by the external resistors. Evaluate the circuit taking the actual conditions of use into account.

ADUSTABLE OUTPUT VOLTAGE TYPE SETTINGS

- **Output Voltage Setting Method**

RP108J081x can be adjusted the output voltage by using the external divider resistors.

If the V_{FB} voltage fixed into the IC is described as $SetV_{FB}$, the output voltage can be set by using the following equations

$SetV_{FB}$ is equal to 0.8V. The V_{OUT} pin of RP108J081x should be connected to the V_{FB} pin.

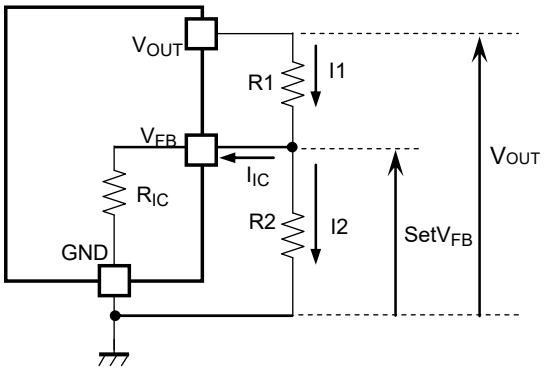

$I1 = I_{IC} + I2$ ..... (1)

$I2 = SetV_{FB} / R2$ ..... (2)

Thus,

$I1 = I_{IC} + SetV_{FB} / R2$ ..... (3)

Therefore,

$V_{OUT} = SetV_{FB} \times R1 \times I1$ ..... (4)

Put Equation (3) into Equation (4), then

$V_{OUT} = SetV_{FB} + R1(I_{IC} + SetV_{FB} / R2)$

$= SetV_{FB} \times (1+R1/R2) + R1 \times I_{IC}$ ..... (5)

In Equation (5), R1x I_{IC} is the error-causing factor in V_{OUT}.

As for I_{IC},

$I_{IC} = SetV_{FB} / R_{IC}$ ..... (6)

Therefore, the error-causing factor R1x I_{IC} can be described as follows.

$R1 \times I_{IC} = R1 \times SetV_{FB} / R_{IC}$

$= SetV_{FB} \times R1 / R_{IC}$ ..... (7)

For better accuracy, choosing R1 ($<<R_{IC}$) reduces this error.

Without the error-causing factor R1x I_{IC}, the output voltage can be calculated by the following equation

$V_{OUT} = SetV_{FB} \times ((R1 + R2) / R2)$ ..... (8)

R_{IC} of RP108J is approximately Typ.1.6MΩ (Ta=25°C, this value is guaranteed by design.).

The value could be affected by the temperature, therefore evaluate the circuit taking the actual conditions of use into account.

REVERSE CURRENT PROTECTION CIRCUIT

The RP108J includes a Reverse Current Protection Circuit, which stops the reverse current from V_{OUT} pin to V_{DD} pin or to GND pin when V_{OUT} becomes higher than V_{IN}.

Usually, the LDO using Pch output transistor contains a parasitic diode between V_{DD} pin and V_{OUT} pin. Therefore, if V_{OUT} is higher than V_{IN}, the parasitic diode becomes forward direction. As a result, the current flows from V_{OUT} pin to V_{DD} pin.

The RP108J switches the mode to the reverse current protection mode before V_{IN} becomes lower than V_{OUT} by connecting the parasitic diode of Pch output transistor to the backward direction, and connecting the gate to V_{OUT} pin. As a result, the Pch output transistor is turned off and the all the current pathways from V_{OUT} pin to GND pin are shut down to maintain the reverse current lower than 10μA.

Switching to either the normal mode or to the reverse current protection mode is determined by the magnitude of V_{IN} voltage and V_{OUT} voltage. For the stable operation, offset and hysteresis are set as the threshold. Offset is set to 30mV (Typ.25°C) and hysteresis is set to 5mV (Typ.25°C).

Therefore, the minimum dropout voltage under the small load current condition is restricted by the value of 35mV (Typ.25°C).

Fig.1 and Fig.2 show the diagrams of each mode, and Fig.3 shows the load characteristics of each mode. When giving the V_{OUT} pin a constant-voltage and decreasing the V_{IN} voltage, the dropout voltage will become lower than 30mV (Typ.25°C). As a result, the reverse current protection starts to function to stop the load current. By increasing the dropout voltage higher than 35mV (Typ.25°C), the protection mode will be released to let the load current to flow. If the dropout voltage to be used is lower than 30mV (Typ.25°C), the detection and the release may be repeated.

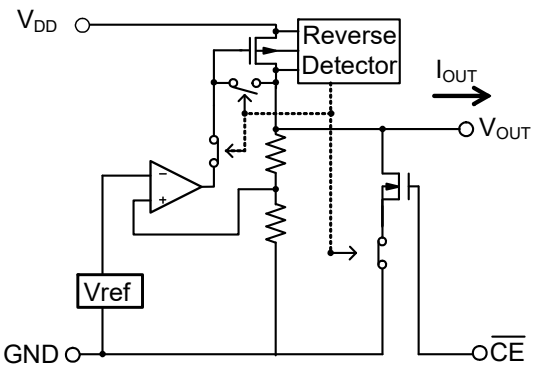

Fig.1 Normal Mode

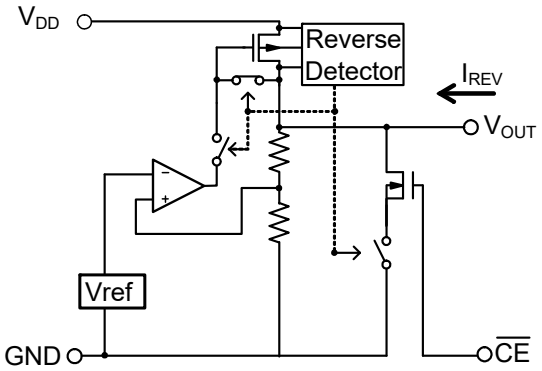

Fig.2 Reverse Current Protection Mode

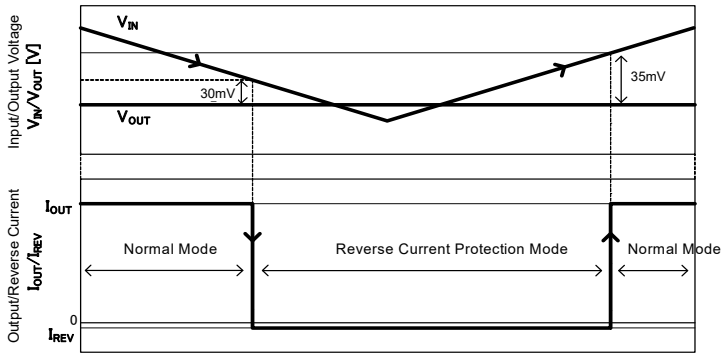

Fig. 3 Reverse Current Protection Mode Detection/ Release &
Reverse Current/ Output Current Characteristics

CONSTANT SLOPE CIRCUIT (RP108Jxx1B/xx1D)

RP108Jxx1B/xx1D has a Constant Slope Circuit (soft-start circuit) which allows the output voltage to start-up gradually. The capacitor to create the start-up slope is built-in the IC so that it does not require any external components. The upper limit of inrush current during the start-up is controlled by the short current ISC and the output current limit ILIM.

In the following characteristics C_{OUT} = 10 µF (R_{LOAD} = 380Ω), the inrush current I_{RUSH} is not controlled by the short current ISC and the output current limit ILIM. Therefore the output voltage rises with the soft-start time (T_{SLOPE}) set inside IC, and it enables to control the overshoot of the output voltage and the inrush current. T_{SLOPE} is typ. 180 µs.

In the characteristics C_{OUT} = 20 µF, I_{RUSH} at the low output voltage is controlled by the short current ISC. After the current is released from ISC, the output voltage rises with the soft-start time (T_{SLOPE}).

In the characteristics C_{OUT} = 100 µF, I_{RUSH} at the low output voltage is controlled by the short current ISC. After the current is released from ISC, it is controlled by the output current limit. The output voltage rises with the soft-start time (T_{SLOPE}) or longer.

The relation of the inrush current and the constant slope depends on the output voltage since the inrush current is a sum of the charge current of C_{OUT} and the load current. Use RP108Jxx1E/xx1F to avoid an influence on peripheral components due to the inrush current generated in the use environment conditions (C_{OUT} and output voltage).

RP108J381B/D Inrush current characteristics

Constant Slope Circuit

(Diagrammatic sketch)

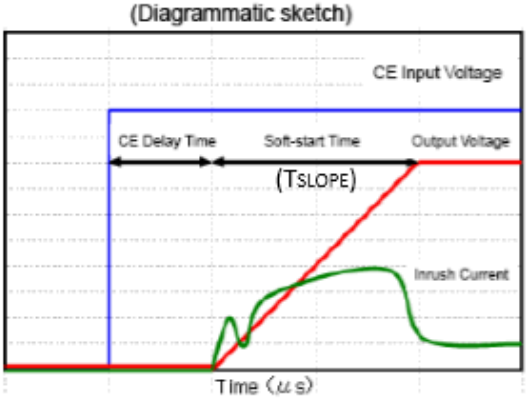

C_{IN}=4.7µF, C_{OUT}=10µF, Topt=25°C, R_{LOAD}=380Ω

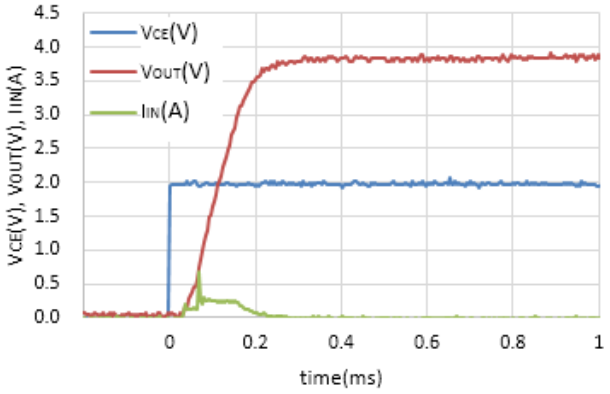

C_{IN}=4.7µF, C_{OUT}=20µF, Topt=25°C, R_{LOAD}=380Ω

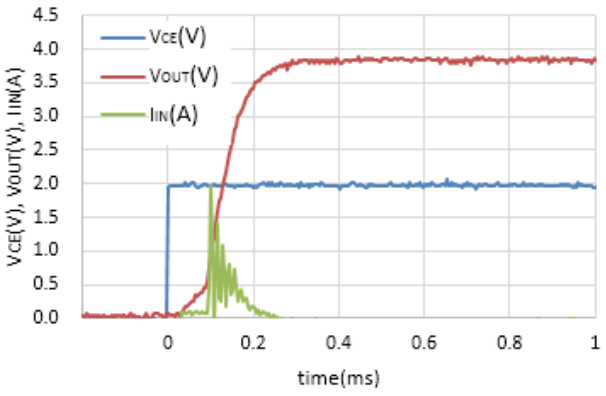

C_{IN}=4.7µF, C_{OUT}=100µF, Topt=25°C, R_{LOAD}=380Ω

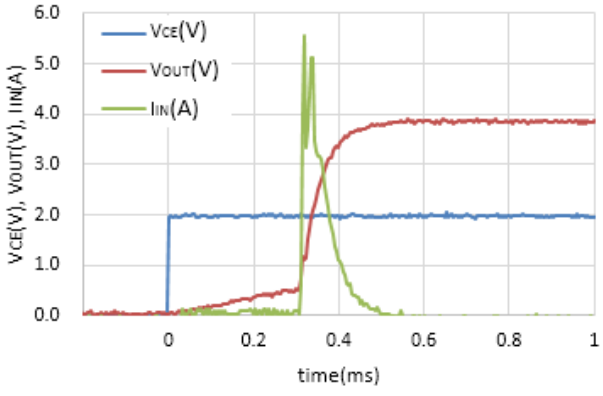

CONSTANT SLOPE CIRCUIT (RP108Jxx1E/xx1F)

RP108Jxx1E/xx1F has a constant slope circuit (soft-start circuit) which allows the output voltage to start-up gradually. The capacitor to create the start-up slope is built-in the IC so that it does not require any external components. The upper limit of inrush current during the start-up is controlled by the output current limit ILIM.

As shown in the following Foldback Characteristics, the inrush current is not controlled by the short current ISC during the soft-start time at the start-up. Therefore the output voltage rises with the soft-start time (T_{SLOPE}) set inside IC, and it enables to control the overshoot of the output voltage and the inrush current. T_{SLOPE} is typ. 570 μs (max. 900 μs/85°C). Use RP108Jxx1B/xx1D to avoid an influence on peripheral components due to the output start-up time is slow in the system.

In the characteristics C_{OUT} = 20 μF, the inrush current is lower or equal to the output current limit ILIM. The output voltage rises with the soft-start time (T_{SLOPE}).

Similarly in the characteristics C_{OUT} = 100 μF, the inrush current is lower or equal to the output current limit ILIM. The output voltage rises with the soft-start time (T_{SLOPE}).

The relation of the inrush current and the constant slope depends on the output voltage since the inrush current is a sum of the charge current of C_{OUT} and the load current.

RP108J381E/F Inrush current characteristics

Constant Slope Circuit
(Diagrammatic sketch)

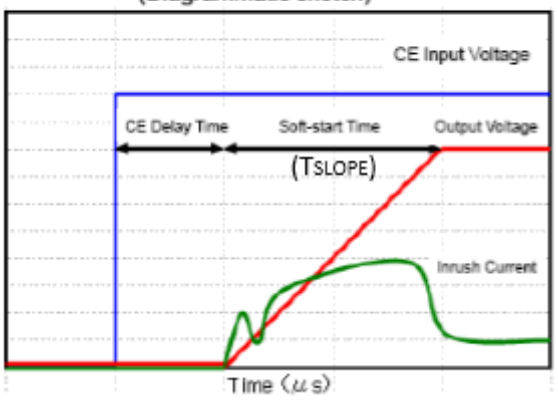

Foldback Characteristics
(Diagrammatic sketch)

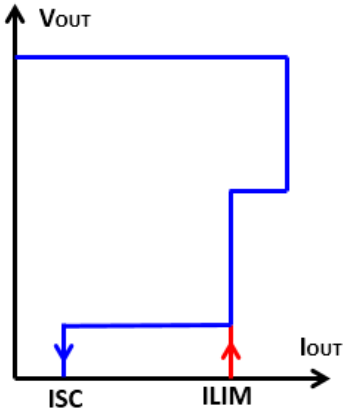

CIN=4.7μF, COUT=20μF, Topt=25°C, RLOAD=380Ω

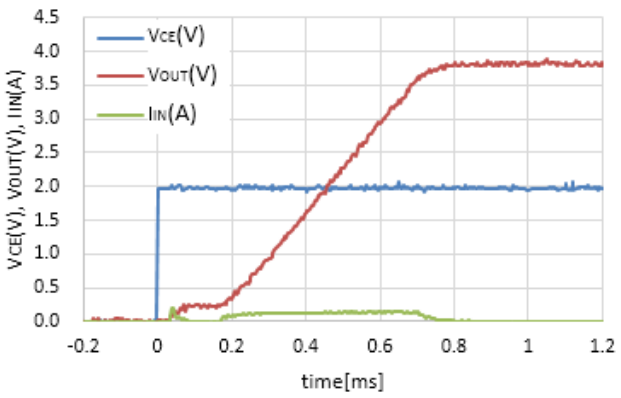

CIN=4.7μF, COUT=100μF, Topt=25°C, RLOAD=380Ω

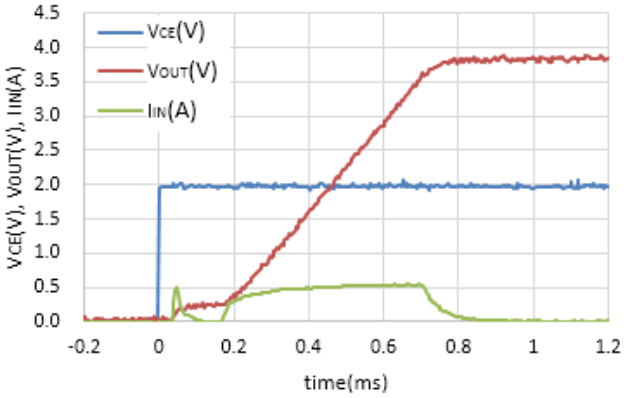

PACKAGE INFORMATION

Power Dissipation (TO-252-5-P2)

Power Dissipation (P_D) depends on conditions of mounting on board. This specification is based on the Measurement Conditions below.

Measurement conditions

	Ultra High Wattage Land Pattern	Standard Land Pattern
Environment	Mounting on board (Wind velocity 0m/s)	
Board Material	Glass cloth epoxy plastic (Four-layers)	Glass cloth epoxy plastic (Double layers)
Board Dimensions	76.2mm x 114.3mm x 0.8mm	50mm x 50mm x 1.6mm
Copper Ratio	Top, Back side: 50mm Square, Approx.96%, 2nd, 3rd Layer: 50mm Square, Approx.100%	Top side: Approx. 50%, Back side: Approx. 50%
Through - Hole	ϕ 0.4mm x 30pcs	ϕ 0.5mm x 24pcs

Measurement Results (Ta=25°C, Tjmax=125°C)

	Ultra High Wattage Land Pattern	Standard Land Pattern
Power Dissipation	3800mW	1900mW
Thermal Resistance	θja= (125-25°C)/3.8W = 26°C/W	θja=(125-25°C)/1.9W= 53°C/W
	θjc= 7°C/W	θjc= 17°C/W

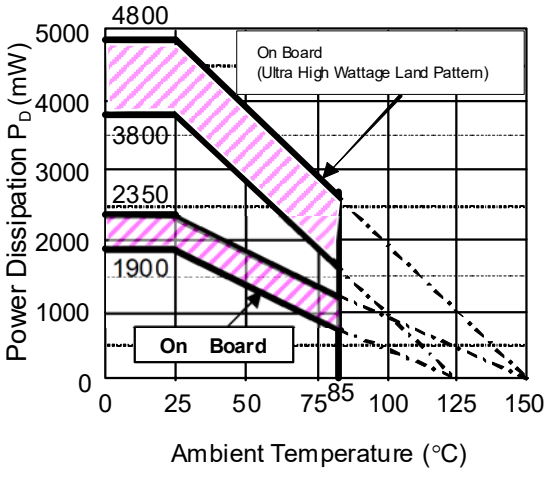

Power Dissipation

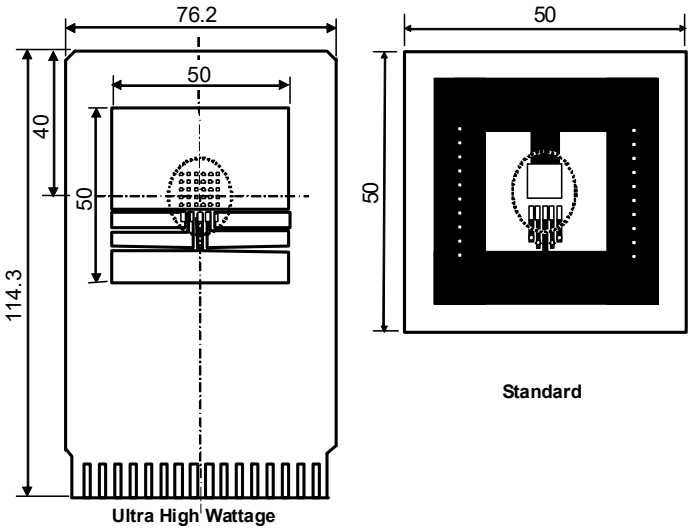

Measurement Board Pattern
IC Mount Area (Unit: mm)

The above graph shows the Power Dissipation of the package based on Tjmax=125°C and Tjmax=150°C. Operating the IC in the shaded area in the graph might have an influence its lifetime.

Operating time must be within the time limit described in the table below, in case of operating in the shaded area.

Operating Time	Estimated years (Operating 4 hours/day)
13,000 hours	9 years

- **PACKAGE DIMENSIONS (TO-252-5-P2)**

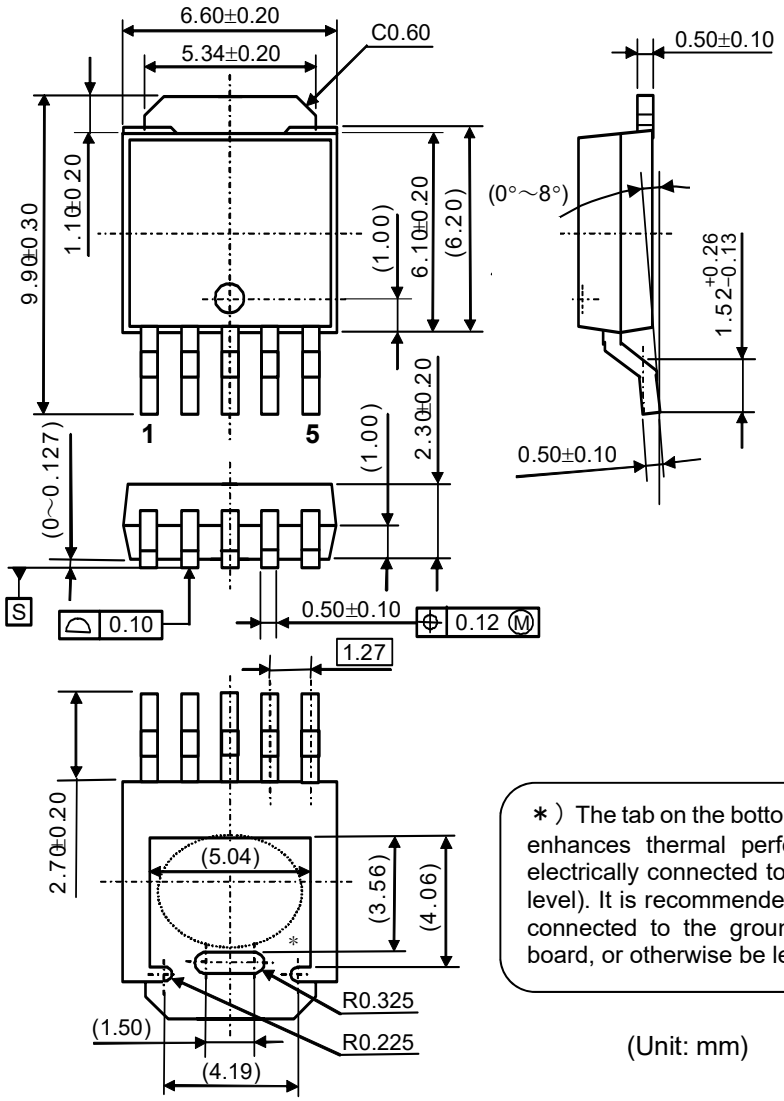

＊）The tab on the bottom of the package enhances thermal performance and is electrically connected to GND (substrate level). It is recommended that the tab be connected to the ground plane on the board, or otherwise be left floating.

(Unit: mm)

- **MARK SPECIFICATION (TO-252-5-P2)**

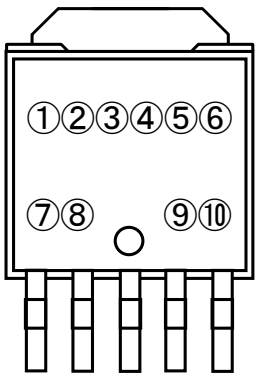

①②③④⑤⑥⑦⑧: Product Code…**Refer to *MARK SPECIFICATION TABLE***
⑨⑩: Lot Number … Alphanumeric Serial Number

RP108J Mark Specification Table (TO-252-5-P2)

RP108Jxx1B

Part Number	①②③④⑤⑥⑦⑧	V_{SET}
RP108J081B	**E 1 J 0 8 1 B**	0.8V
RP108J091B	**E 1 J 0 9 1 B**	0.9V
RP108J101B	**E 1 J 1 0 1 B**	1.0V
RP108J111B	**E 1 J 1 1 1 B**	1.1V
RP108J121B	**E 1 J 1 2 1 B**	1.2V
RP108J131B	**E 1 J 1 3 1 B**	1.3V
RP108J141B	**E 1 J 1 4 1 B**	1.4V
RP108J151B	**E 1 J 1 5 1 B**	1.5V
RP108J161B	**E 1 J 1 6 1 B**	1.6V
RP108J171B	**E 1 J 1 7 1 B**	1.7V
RP108J181B	**E 1 J 1 8 1 B**	1.8V
RP108J191B	**E 1 J 1 9 1 B**	1.9V
RP108J201B	**E 1 J 2 0 1 B**	2.0V
RP108J211B	**E 1 J 2 1 1 B**	2.1V
RP108J221B	**E 1 J 2 2 1 B**	2.2V
RP108J231B	**E 1 J 2 3 1 B**	2.3V
RP108J241B	**E 1 J 2 4 1 B**	2.4V
RP108J251B	**E 1 J 2 5 1 B**	2.5V
RP108J261B	**E 1 J 2 6 1 B**	2.6V
RP108J271B	**E 1 J 2 7 1 B**	2.7V
RP108J281B	**E 1 J 2 8 1 B**	2.8V
RP108J291B	**E 1 J 2 9 1 B**	2.9V
RP108J301B	**E 1 J 3 0 1 B**	3.0V
RP108J311B	**E 1 J 3 1 1 B**	3.1V
RP108J321B	**E 1 J 3 2 1 B**	3.2V
RP108J331B	**E 1 J 3 3 1 B**	3.3V
RP108J341B	**E 1 J 3 4 1 B**	3.4V
RP108J351B	**E 1 J 3 5 1 B**	3.5V
RP108J361B	**E 1 J 3 6 1 B**	3.6V
RP108J371B	**E 1 J 3 7 1 B**	3.7V
RP108J381B	**E 1 J 3 8 1 B**	3.8V
RP108J391B	**E 1 J 3 9 1 B**	3.9V
RP108J401B	**E 1 J 4 0 1 B**	4.0V
RP108J411B	**E 1 J 4 1 1 B**	4.1V
RP108J421B	**E 1 J 4 2 1 B**	4.2V
RP108J121B5	**E 1 J 1 2 1 B 5**	1.25V
RP108J181B5	**E 1 J 1 8 1 B 5**	1.85V
RP108J281B5	**E 1 J 2 8 1 B 5**	2.85V

RP108Jxx1D

Part Number	①②③④⑤⑥⑦⑧	V_{SET}
RP108J081D	**E 1 J 0 8 1 D**	0.8V
RP108J091D	**E 1 J 0 9 1 D**	0.9V
RP108J101D	**E 1 J 1 0 1 D**	1.0V
RP108J111D	**E 1 J 1 1 1 D**	1.1V
RP108J121D	**E 1 J 1 2 1 D**	1.2V
RP108J131D	**E 1 J 1 3 1 D**	1.3V
RP108J141D	**E 1 J 1 4 1 D**	1.4V
RP108J151D	**E 1 J 1 5 1 D**	1.5V
RP108J161D	**E 1 J 1 6 1 D**	1.6V
RP108J171D	**E 1 J 1 7 1 D**	1.7V
RP108J181D	**E 1 J 1 8 1 D**	1.8V
RP108J191D	**E 1 J 1 9 1 D**	1.9V
RP108J201D	**E 1 J 2 0 1 D**	2.0V
RP108J211D	**E 1 J 2 1 1 D**	2.1V
RP108J221D	**E 1 J 2 2 1 D**	2.2V
RP108J231D	**E 1 J 2 3 1 D**	2.3V
RP108J241D	**E 1 J 2 4 1 D**	2.4V
RP108J251D	**E 1 J 2 5 1 D**	2.5V
RP108J261D	**E 1 J 2 6 1 D**	2.6V
RP108J271D	**E 1 J 2 7 1 D**	2.7V
RP108J281D	**E 1 J 2 8 1 D**	2.8V
RP108J291D	**E 1 J 2 9 1 D**	2.9V
RP108J301D	**E 1 J 3 0 1 D**	3.0V
RP108J311D	**E 1 J 3 1 1 D**	3.1V
RP108J321D	**E 1 J 3 2 1 D**	3.2V
RP108J331D	**E 1 J 3 3 1 D**	3.3V
RP108J341D	**E 1 J 3 4 1 D**	3.4V
RP108J351D	**E 1 J 3 5 1 D**	3.5V
RP108J361D	**E 1 J 3 6 1 D**	3.6V
RP108J371D	**E 1 J 3 7 1 D**	3.7V
RP108J381D	**E 1 J 3 8 1 D**	3.8V
RP108J391D	**E 1 J 3 9 1 D**	3.9V
RP108J401D	**E 1 J 4 0 1 D**	4.0V
RP108J411D	**E 1 J 4 1 1 D**	4.1V
RP108J421D	**E 1 J 4 2 1 D**	4.2V
RP108J121D5	**E 1 J 1 2 1 D 5**	1.25V
RP108J181D5	**E 1 J 1 8 1 D 5**	1.85V
RP108J281D5	**E 1 J 2 8 1 D 5**	2.85V

RP108Jxx1E

Part Number	①②③④⑤⑥⑦⑧	V_{SET}
RP108J081E	**E 1 J 0 8 1 E**	0.8V
RP108J091E	**E 1 J 0 9 1 E**	0.9V
RP108J101E	**E 1 J 1 0 1 E**	1.0V
RP108J111E	**E 1 J 1 1 1 E**	1.1V
RP108J121E	**E 1 J 1 2 1 E**	1.2V
RP108J131E	**E 1 J 1 3 1 E**	1.3V
RP108J141E	**E 1 J 1 4 1 E**	1.4V
RP108J151E	**E 1 J 1 5 1 E**	1.5V
RP108J161E	**E 1 J 1 6 1 E**	1.6V
RP108J171E	**E 1 J 1 7 1 E**	1.7V
RP108J181E	**E 1 J 1 8 1 E**	1.8V
RP108J191E	**E 1 J 1 9 1 E**	1.9V
RP108J201E	**E 1 J 2 0 1 E**	2.0V
RP108J211E	**E 1 J 2 1 1 E**	2.1V
RP108J221E	**E 1 J 2 2 1 E**	2.2V
RP108J231E	**E 1 J 2 3 1 E**	2.3V
RP108J241E	**E 1 J 2 4 1 E**	2.4V
RP108J251E	**E 1 J 2 5 1 E**	2.5V
RP108J261E	**E 1 J 2 6 1 E**	2.6V
RP108J271E	**E 1 J 2 7 1 E**	2.7V
RP108J281E	**E 1 J 2 8 1 E**	2.8V
RP108J291E	**E 1 J 2 9 1 E**	2.9V
RP108J301E	**E 1 J 3 0 1 E**	3.0V
RP108J311E	**E 1 J 3 1 1 E**	3.1V
RP108J321E	**E 1 J 3 2 1 E**	3.2V
RP108J331E	**E 1 J 3 3 1 E**	3.3V
RP108J341E	**E 1 J 3 4 1 E**	3.4V
RP108J351E	**E 1 J 3 5 1 E**	3.5V
RP108J361E	**E 1 J 3 6 1 E**	3.6V
RP108J371E	**E 1 J 3 7 1 E**	3.7V
RP108J381E	**E 1 J 3 8 1 E**	3.8V
RP108J391E	**E 1 J 3 9 1 E**	3.9V
RP108J401E	**E 1 J 4 0 1 E**	4.0V
RP108J411E	**E 1 J 4 1 1 E**	4.1V
RP108J421E	**E 1 J 4 2 1 E**	4.2V
RP108J121E5	**E 1 J 1 2 1 E 5**	1.25V
RP108J181E5	**E 1 J 1 8 1 E 5**	1.85V
RP108J281E5	**E 1 J 2 8 1 E 5**	2.85V

RP108Jxx1F

Part Number	①②③④⑤⑥⑦⑧	V_{SET}
RP108J081F	**E 1 J 0 8 1 F**	0.8V
RP108J091F	**E 1 J 0 9 1 F**	0.9V
RP108J101F	**E 1 J 1 0 1 F**	1.0V
RP108J111F	**E 1 J 1 1 1 F**	1.1V
RP108J121F	**E 1 J 1 2 1 F**	1.2V
RP108J131F	**E 1 J 1 3 1 F**	1.3V
RP108J141F	**E 1 J 1 4 1 F**	1.4V
RP108J151F	**E 1 J 1 5 1 F**	1.5V
RP108J161F	**E 1 J 1 6 1 F**	1.6V
RP108J171F	**E 1 J 1 7 1 F**	1.7V
RP108J181F	**E 1 J 1 8 1 F**	1.8V
RP108J191F	**E 1 J 1 9 1 F**	1.9V
RP108J201F	**E 1 J 2 0 1 F**	2.0V
RP108J211F	**E 1 J 2 1 1 F**	2.1V
RP108J221F	**E 1 J 2 2 1 F**	2.2V
RP108J231F	**E 1 J 2 3 1 F**	2.3V
RP108J241F	**E 1 J 2 4 1 F**	2.4V
RP108J251F	**E 1 J 2 5 1 F**	2.5V
RP108J261F	**E 1 J 2 6 1 F**	2.6V
RP108J271F	**E 1 J 2 7 1 F**	2.7V
RP108J281F	**E 1 J 2 8 1 F**	2.8V
RP108J291F	**E 1 J 2 9 1 F**	2.9V
RP108J301F	**E 1 J 3 0 1 F**	3.0V
RP108J311F	**E 1 J 3 1 1 F**	3.1V
RP108J321F	**E 1 J 3 2 1 F**	3.2V
RP108J331F	**E 1 J 3 3 1 F**	3.3V
RP108J341F	**E 1 J 3 4 1 F**	3.4V
RP108J351F	**E 1 J 3 5 1 F**	3.5V
RP108J361F	**E 1 J 3 6 1 F**	3.6V
RP108J371F	**E 1 J 3 7 1 F**	3.7V
RP108J381F	**E 1 J 3 8 1 F**	3.8V
RP108J391F	**E 1 J 3 9 1 F**	3.9V
RP108J401F	**E 1 J 4 0 1 F**	4.0V
RP108J411F	**E 1 J 4 1 1 F**	4.1V
RP108J421F	**E 1 J 4 2 1 F**	4.2V
RP108J121F5	**E 1 J 1 2 1 F 5**	1.25V
RP108J181F5	**E 1 J 1 8 1 F 5**	1.85V
RP108J281F5	**E 1 J 2 8 1 F 5**	2.85V

TEST CIRCUITS

Fixed Output Voltage Type (RP108Jxx1x)

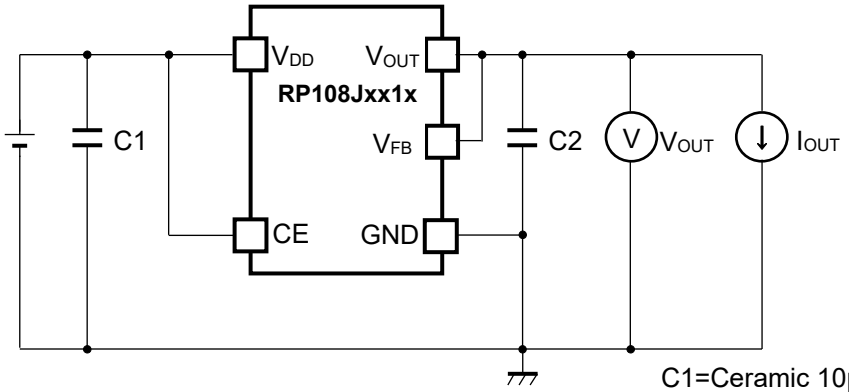

C1=Ceramic 10μF
C2=Ceramic 10μF

Basic Test Circuit

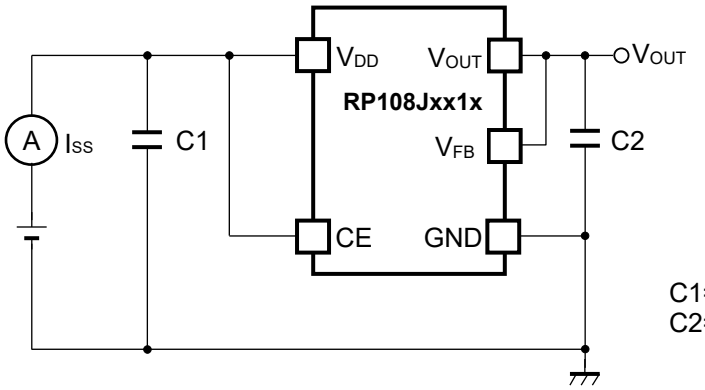

C1=Ceramic 10μF
C2=Ceramic 10μF

Test Circuit for Supply Current

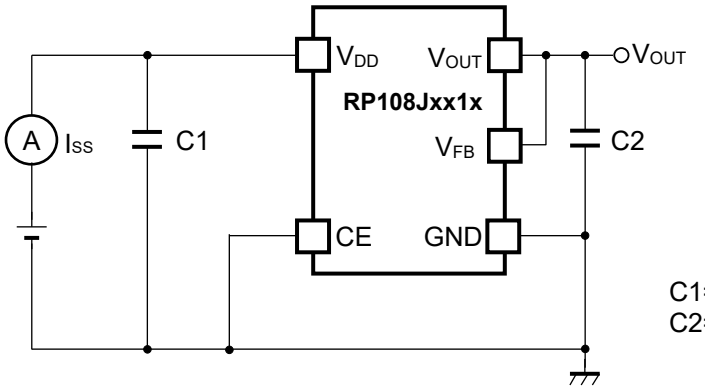

C1=Ceramic 10μF
C2=Ceramic 10μF

Test Circuit for Standby Current

Adjustable Output Voltage Setting Type (RP108J081x)

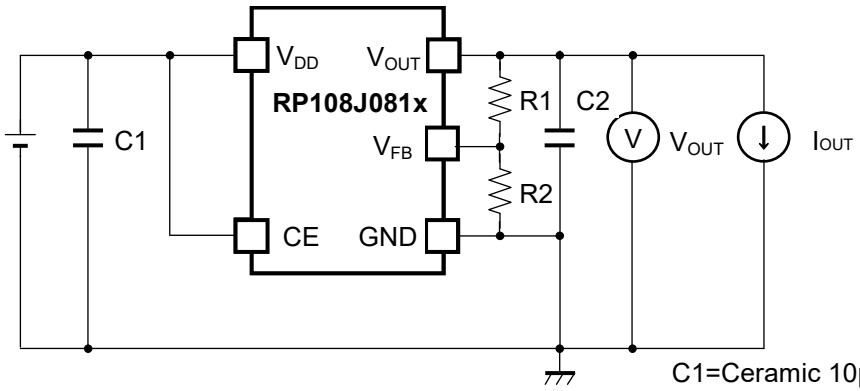

C1=Ceramic 10μF
C2=Ceramic 10μF

Basic Test Circuit

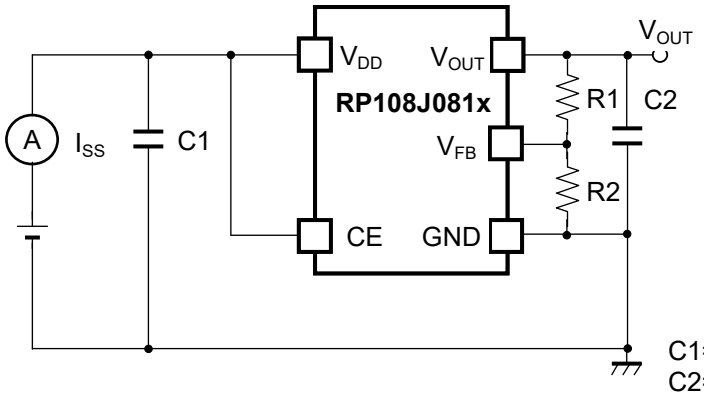

C1=Ceramic 10μF
C2=Ceramic 10μF

Test Circuit for Supply Current

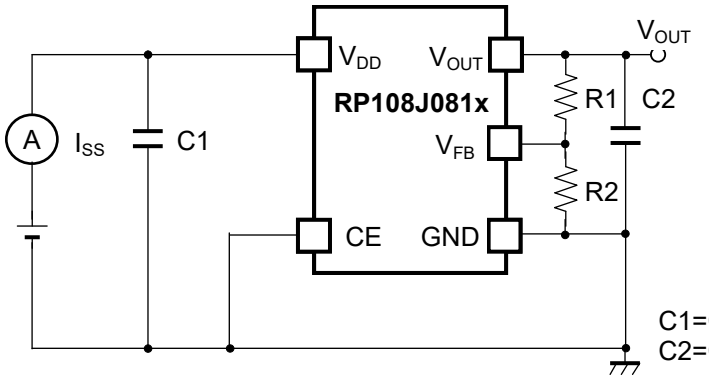

C1=Ceramic 10μF
C2=Ceramic 10μF

Test Circuit for Standby Current

Note : Refer to *Adjustable Output Voltage Type Settings* for R1 and R2.

TYPICAL CHARACTERISTICS

Note: Typical Characteristics are intended to be used as reference data; they are not guaranteed.

1) Output Voltage vs. Input Voltage (C1=C2=Ceramic10μF, Ta=25°C)

RP108J081x

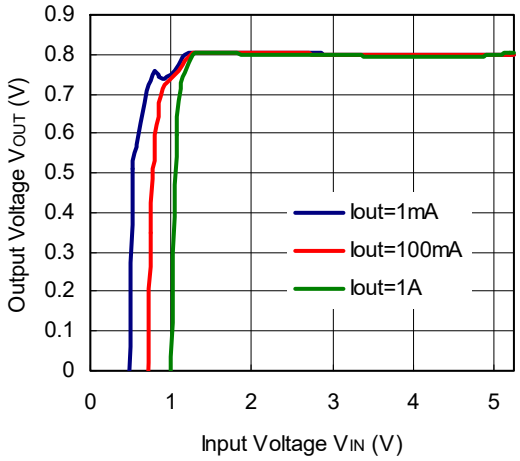

RP108J151x

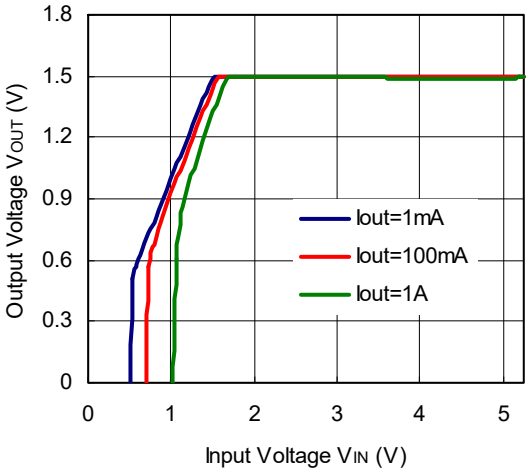

RP108J281x

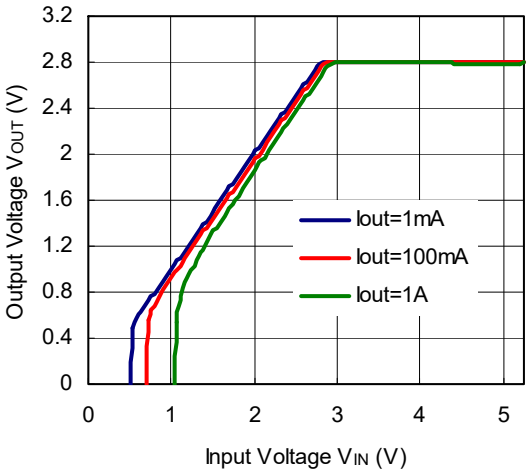

RP108J421x

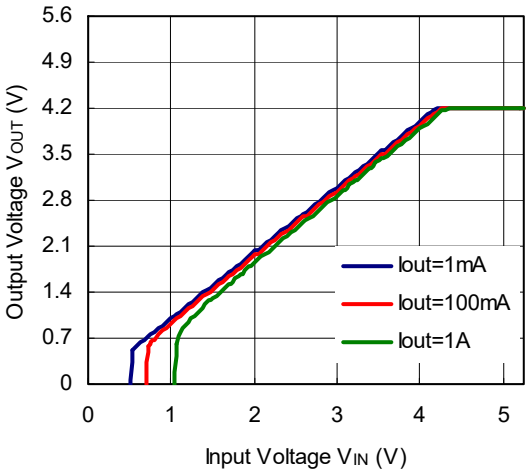

2）Output Voltage vs. Temperature (C1=C2=Ceramic10μF, -40°C ≤ Ta ≤ 85°C)

RP108J081x

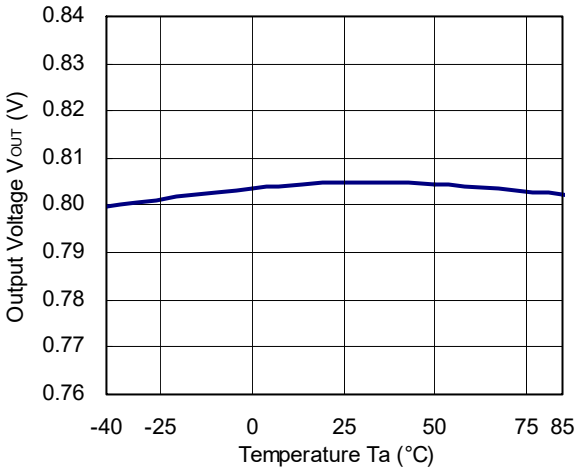

RP108J151x

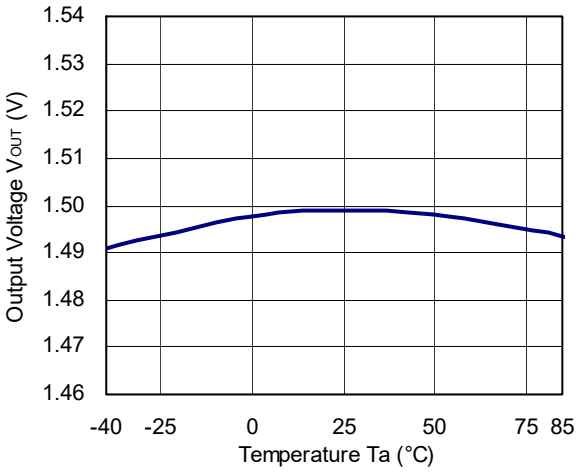

RP108J281x

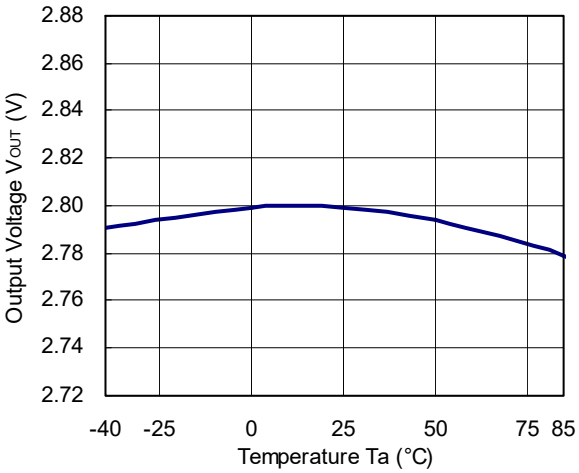

RP108J421x

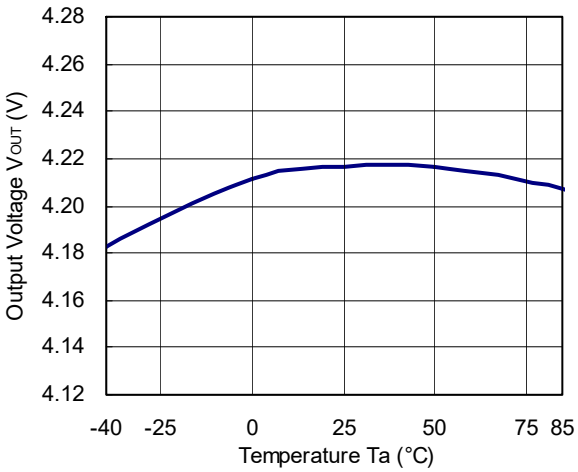

3) Supply Current vs. Input Voltage (C1=C2=Ceramic 10μF, I_{OUT}=0mA, Ta=25°C)

RP108J081x

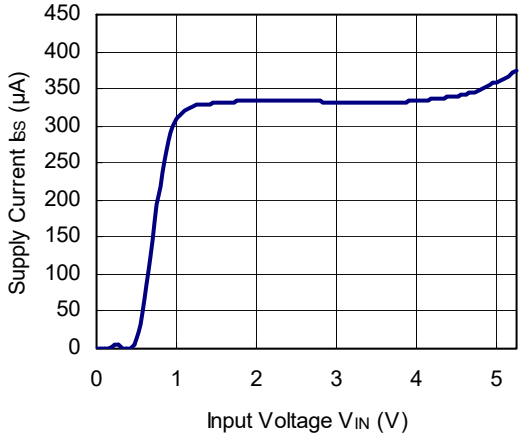

RP108J151x

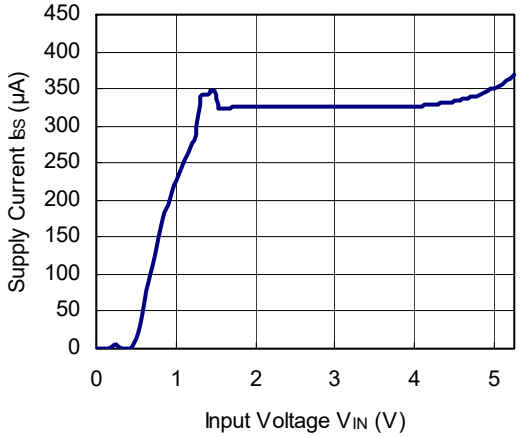

RP108J281x

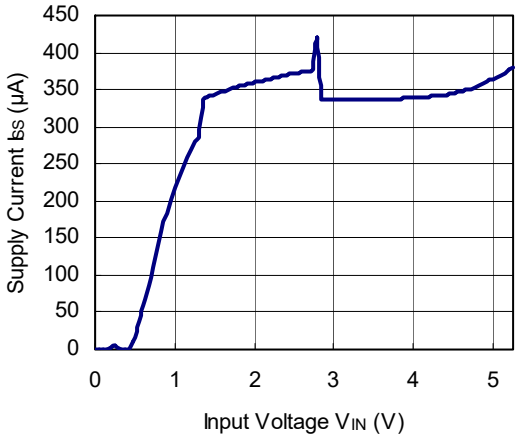

RP108J421x

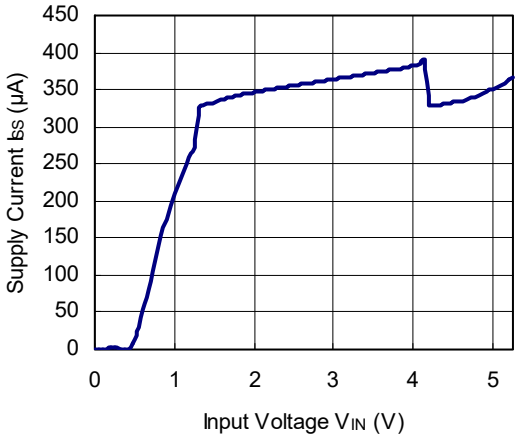

4) Short Current Limit vs. Temperature/ Current Limit vs. Temperature

RP108J includes a Fold-back Protection Circuit. Under conditions during a Fold-back Protection Circuit works, Thermal Shutdown Circuit starts to operate in order to prevent the self-heat generation. Therefore, RP108J isn't able to test "Output voltage vs. Output Current".

RP108J081x

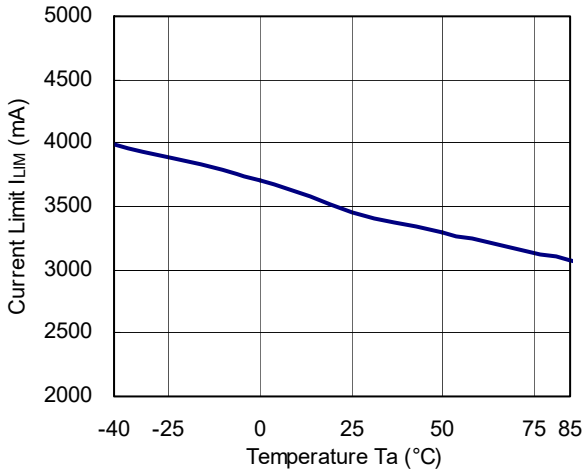

RP108J081x

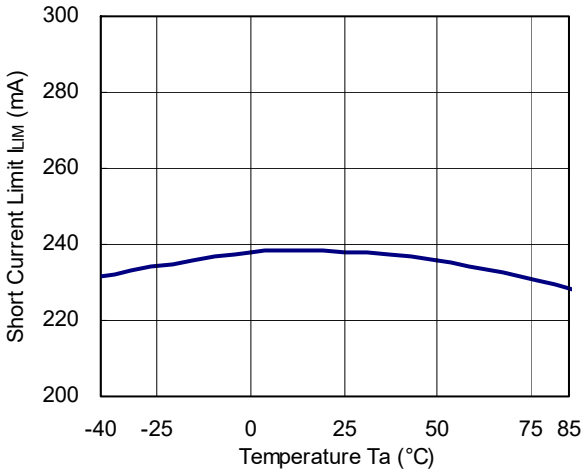

5) Supply Current vs. Temperature (C1= C2=Ceramic 10µF, I_{OUT}=0mA)

RP108J081x

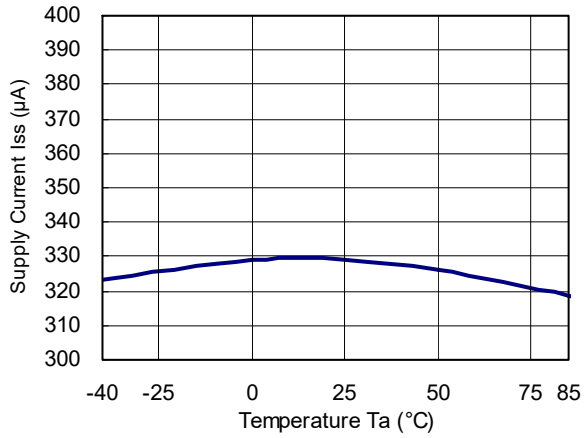

RP108J151x

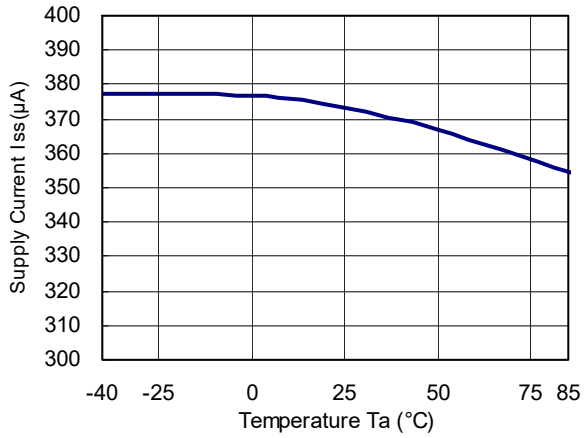

6) Dropout Voltage vs. Output Current (C1=C2=Ceramic 10µF)

RP108J251x

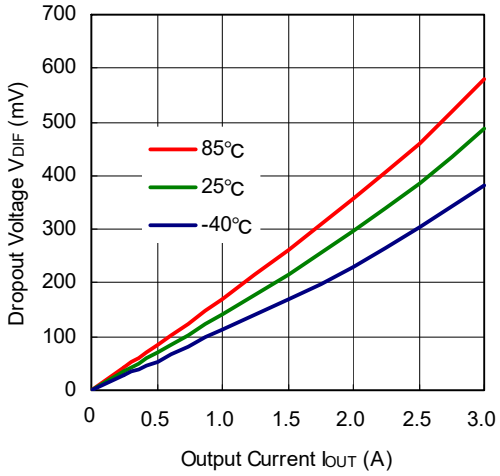

7) Dropout Voltage vs. Set Output Voltage (C1=C2=Ceramic 10µF, Ta=25°C)

RP108J251x

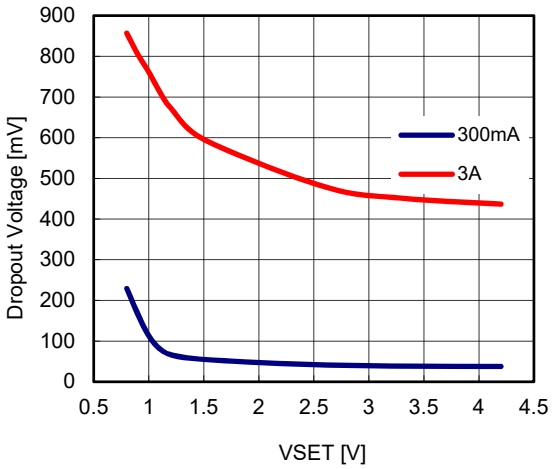

8) Ripple Rejection vs. Input Voltage (C1=C2=10μF, Ripple=0.2Vp-p, I_{OUT}=100μA, Ta=25°C)

RP108J081x

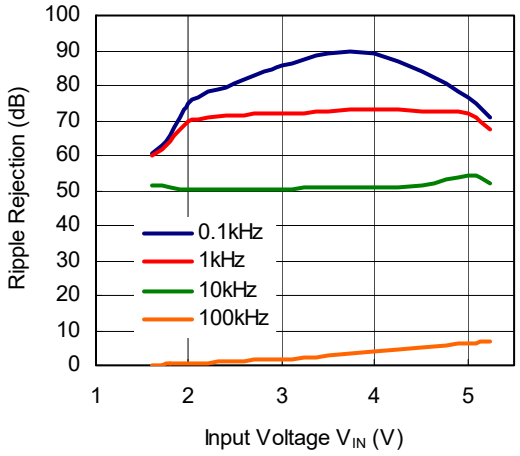

RP108J251x

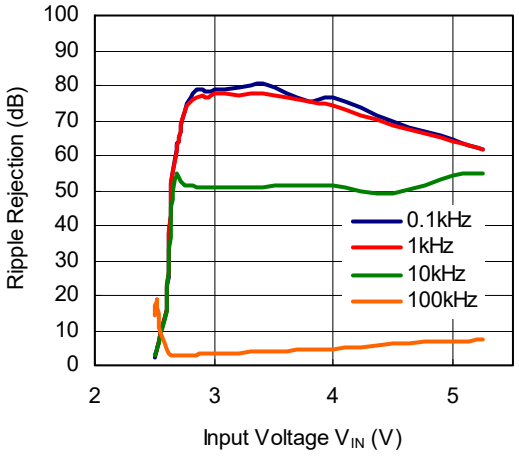

RP108J421x

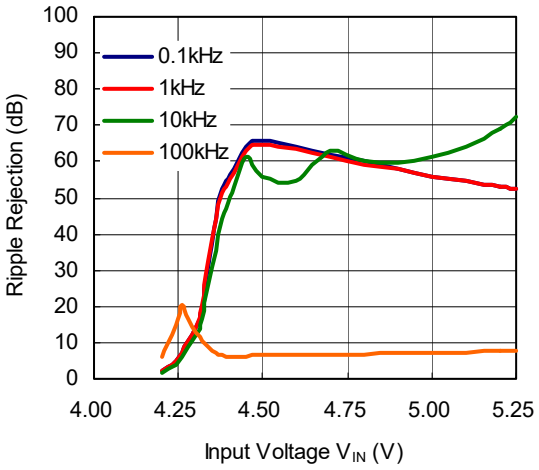

9) Ripple Rejection vs. Frequency (C1=none, C2=10μF, I_{OUT}=100mA, Ta=25°C)

RP108J081x

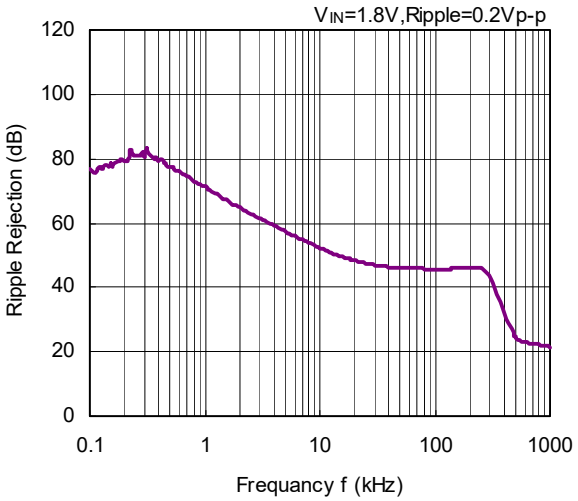

RP108J421x

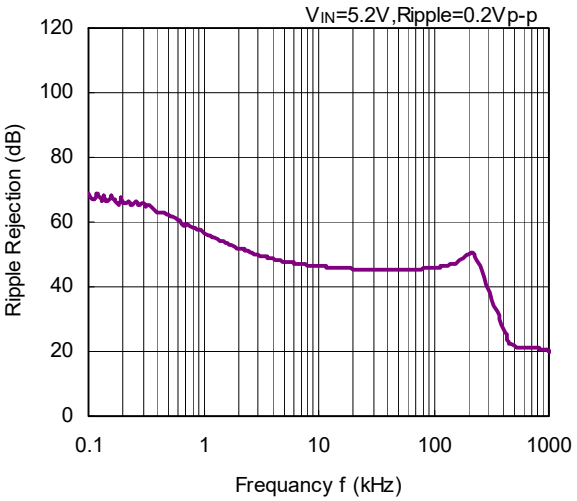

10) Input Transient Response (C1=none, C2=10µF, I_{OUT}=30mA, tr=tf=5µs, Ta=25°C)

RP108J081x

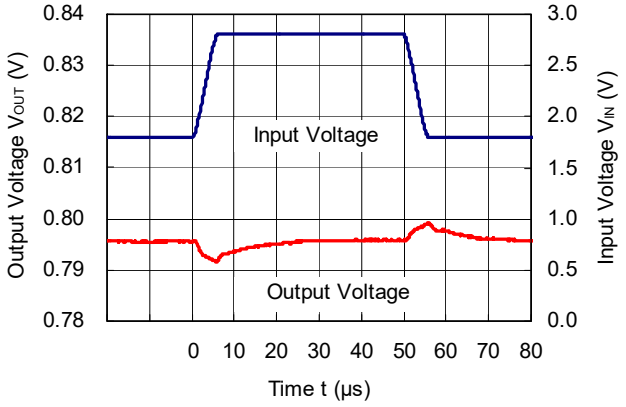

RP108J421x

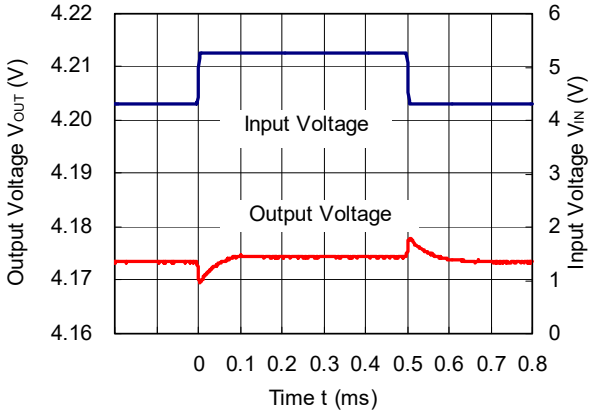

11) Load Transient Response (C1=C2=10µF, tr=tf=0.5µs, Ta=25°C)

RP108J081x

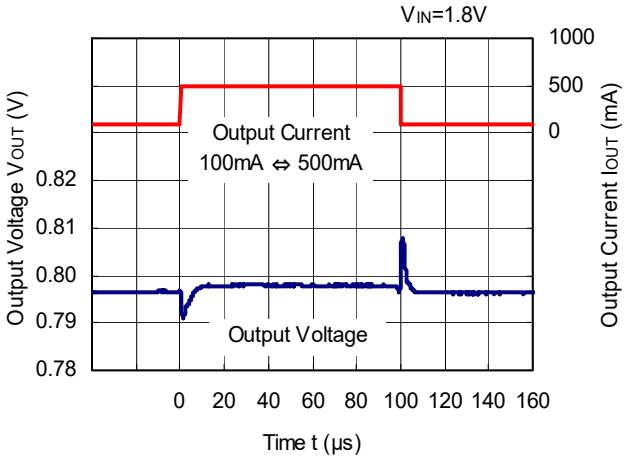

RP108J081x

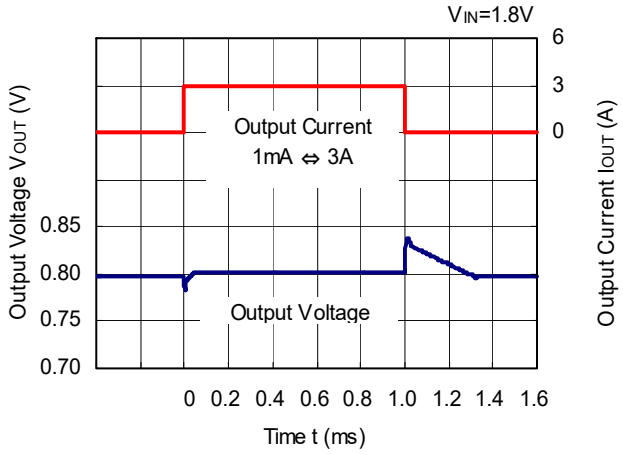

RP108J421x

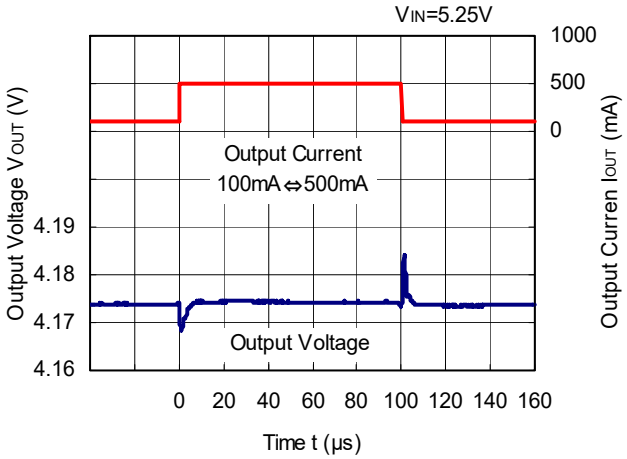

RP108J421x

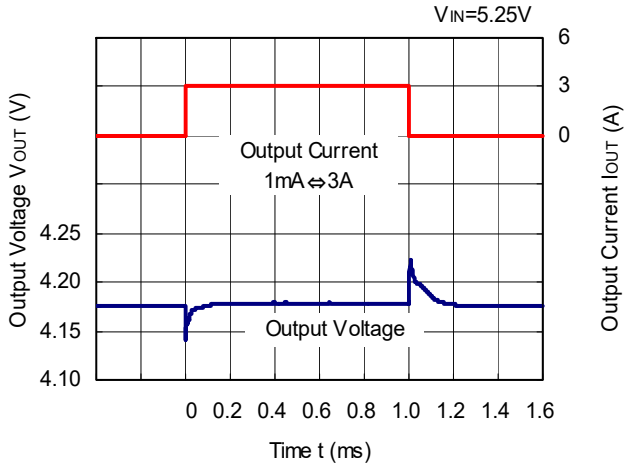

12) Turn on Speed with CE pin (C1=C2=Ceramic 10µF, Ta=25°C)

RP108J081B/D

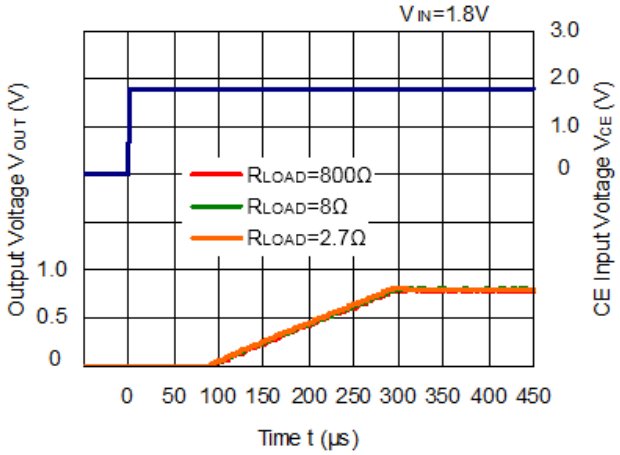

RP108J151B/D

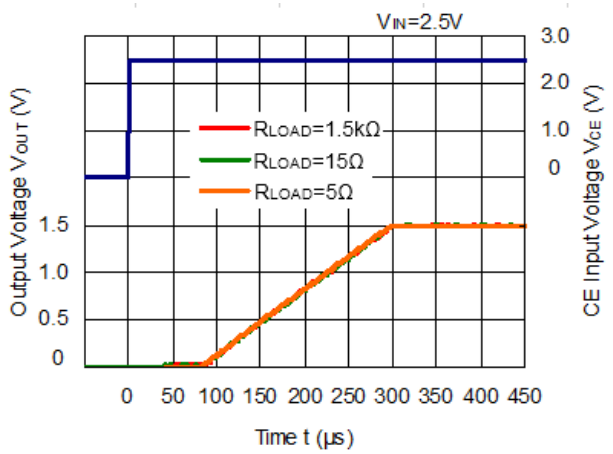

RP108J281B/D

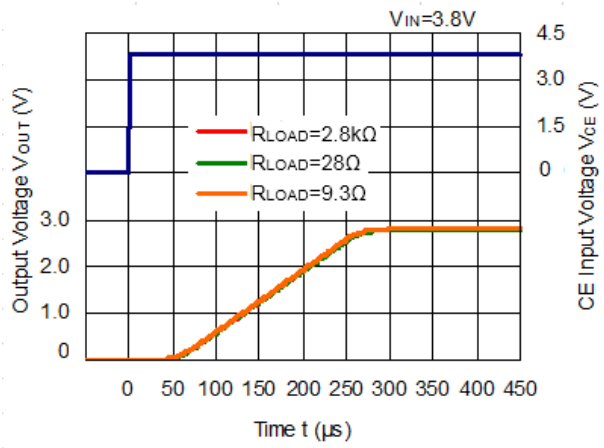

RP108J421B/D

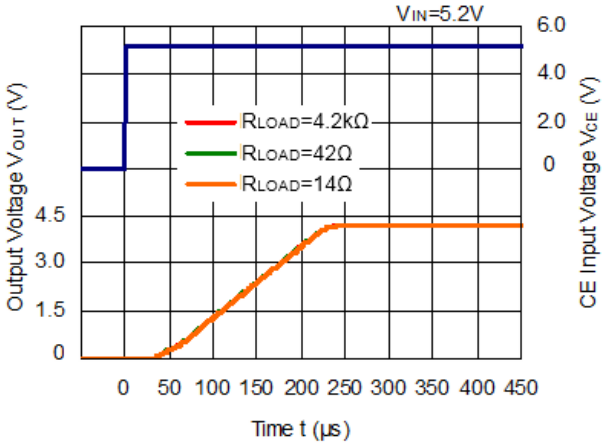

13) Turn off Speed with CE pin (C1=C2=Ceramic 10µF, Ta=25°C)

RP108J081D/F

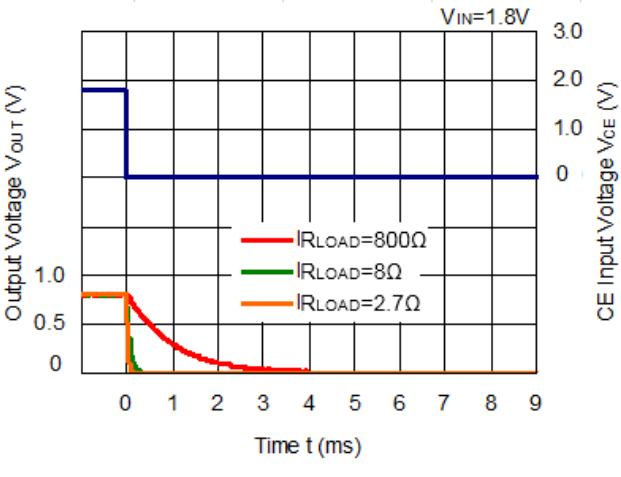

RP108J151D/F

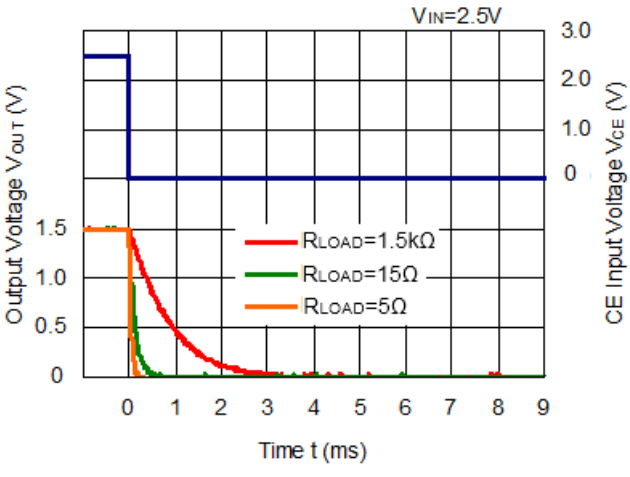

RP108J281D/F

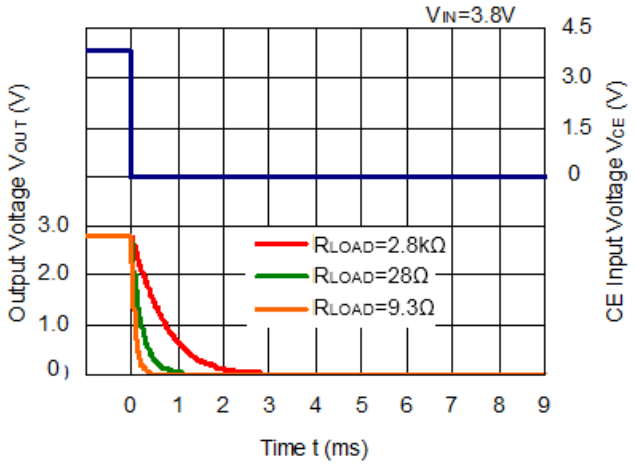

RP108J421D/F

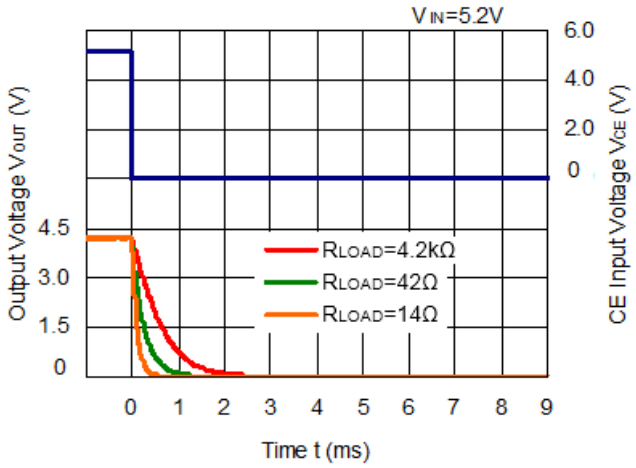

14) Inrush Current

RP108J081B/D

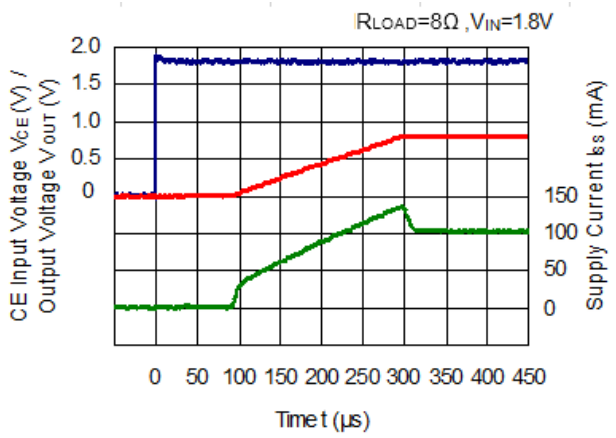

RP108J421B/D

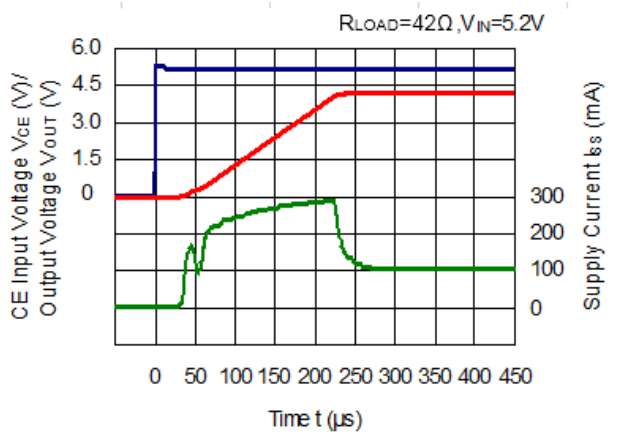

ESR vs. Output Current

When using the IC, consider the following points: The relations between I_{OUT} (Output Current) and ESR of an output capacitor are shown below. The conditions when the white noise level is under 40μV (Avg.) are marked as the hatched area in the graph.

Measurement Conditions

Frequency Band : 10Hz to 2MHz
Temperature : −40°C to 85°C
Hatched area : Noise level is under 40μV
C1, C2 :10.0μF or more

RP108J081x

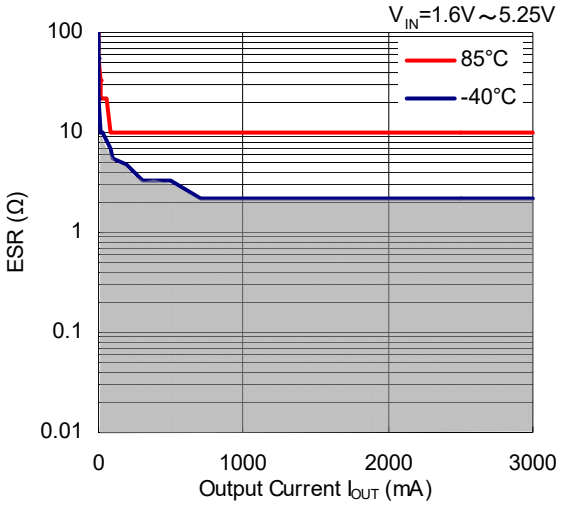

RP108J421x

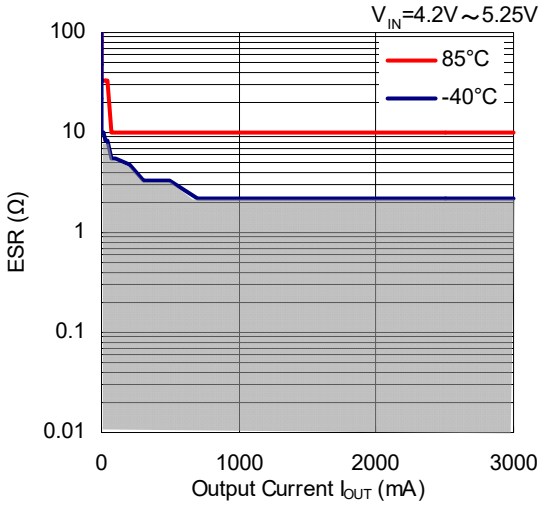

1. The products and the product specifications described in this document are subject to change or discontinuation of production without notice for reasons such as improvement. Therefore, before deciding to use the products, please refer to our sales representatives for the latest information thereon.
2. The materials in this document may not be copied or otherwise reproduced in whole or in part without prior written consent of our company.
3. Please be sure to take any necessary formalities under relevant laws or regulations before exporting or otherwise taking out of your country the products or the technical information described herein.
4. The technical information described in this document shows typical characteristics of and example application circuits for the products. The release of such information is not to be construed as a warranty of or a grant of license under our company's or any third party's intellectual property rights or any other rights.
5. The products listed in this document are intended and designed for use as general electronic components in standard applications (office equipment, telecommunication equipment, measuring instruments, consumer electronic products, amusement equipment etc.). Those customers intending to use a product in an application requiring extreme quality and reliability, for example, in a highly specific application where the failure or misoperation of the product could result in human injury or death (aircraft, spacevehicle, nuclear reactor control system, traffic control system, automotive and transportation equipment, combustion equipment, safety devices, life support system etc.) should first contact us.
6. We are making our continuous effort to improve the quality and reliability of our products, but semiconductor products are likely to fail with certain probability. In order to prevent any injury to persons or damages to property resulting from such failure, customers should be careful enough to incorporate safety measures in their design, such as redundancy feature, fire containment feature and fail-safe feature. We do not assume any liability or responsibility for any loss or damage arising from misuse or inappropriate use of the products.
7. Anti-radiation design is not implemented in the products described in this document.
8. The X-ray exposure can influence functions and characteristics of the products. Confirm the product functions and characteristics in the evaluation stage.
9. WLCSP products should be used in light shielded environments. The light exposure can influence functions and characteristics of the products under operation or storage.
10. There can be variation in the marking when different AOI (Automated Optical Inspection) equipment is used. In the case of recognizing the marking characteristic with AOI, please contact our sales or our distributor before attempting to use AOI.
11. Please contact our sales representatives should you have any questions or comments concerning the products or the technical information.

NISSHINBO

Nisshinbo Micro Devices Inc.

Official website
https://www.nisshinbo-microdevices.co.jp/en/

Purchase information
https://www.nisshinbo-microdevices.co.jp/en/buy/

ENTEGRECİ

Bu belge www.entegreci.com üzerinden sunulmaktadır.

Elektronik komponent tedarikinde Entegreci

Entegreci, Eskişehir merkezli, Türkiye geneline satış yapan bir elektronik komponent mağazasıdır. Entegreler (IC), mikrodenetleyiciler, transistörler, diyotlar, pasif elemanlar, konnektörler, modüller ve geliştirme kartları tek adetten seri üretim adetlerine kadar satılır. Ürün sayfalarında güncel stok durumunu, fiyatı ve datasheet bağlantısını bulabilirsiniz.

Parça koduyla arama

Üretici parça numarasını yazın; stok ve fiyatı hemen görün.

www.entegreci.com

Ürün kategorileri

Entegreden kapasitöre tüm elektronik komponent kategorileri.

Kategorilere göz atın

Üreticiler

Aradığınız üreticinin ürünlerini tek sayfada inceleyin.

Üreticileri görün

Toplu alım ve teklif

Listede olmayan ya da yüksek adetli parçalar için teklif isteyin.

Teklif isteyin

www.entegreci.com | **destek@entegreci.com** | **0850 305 90 34**

Entegreci is an online electronic components store based in Türkiye. Search by manufacturer part number to see stock, prices and datasheets for integrated circuits, microcontrollers, transistors, passive components and connectors, or request a quote for parts that are not listed.

Bu sayfa Entegreci tarafından eklenmiştir. Belgenin önceki sayfaları asıl yayıncısına aittir ve içeriği değiştirilmemiştir; en güncel sürüm için belgenin yayıncısına başvurun.