150mA Low Supply Current LDO REGULATOR

No. EA-239-230822

OUTLINE

The RP110x Series is a voltage regulator (LDO) IC, which has been developed using the CMOS process technology, with high output voltage accuracy, ultra-low supply current, and low ON-resistance transistor. The IC contains the following components: a voltage reference unit, an error amplifier, a resistor-net for output voltage setting, a current limit circuit for preventing short-circuit, a soft-start circuit, and a chip enable circuit.

By minimizing the supply current to 1μA, the IC is able to prolong the battery life of each system. The external capacitor is 0.1μF with phase compensation. The IC also has a constant slope circuit as a soft-start circuit, which does not require any external capacitor. It minimizes the inrush current and prevents the output voltage overshoot at the start-up.

In addition to the small packaged SOT-23-5 and SC-88A, the RP110x Series offers the ultra-small DFN(PL)0808-4 package and DFN1010-4, which enables the high density mounting of LDO regulator.

FEATURES

- Supply Current ..... Typ. 1.0μA
  (Except the current through CE pull down circuit)
- Standby Current ..... Typ. 0.1μA
- Dropout Voltage ..... Typ. 0.28V (I_{OUT}=150mA, V_{OUT}=2.8V)
- Output Voltage Accuracy ..... ±1.0%
- Temperature-Drift Coefficient of Output Voltage ... Typ. ±100ppm/°C
- Line Regulation ..... Typ. 0.02%/V
- Packages ..... DFN(PL)0808-4, DFN1010-4,
  SC-88A, SOT-23-5
- Input Voltage Range ..... 1.4V to 5.25V
- Output Voltage Range ..... 0.8V to 3.6V (0.1V steps)
  (For other voltages, please refer to MARK INFORMATIONS.)
- Built-in Fold Back Protection Circuit ..... Typ. 50mA (Current at short mode)
- Ceramic capacitors are recommended to be used with this IC .....0.1μF or more
- Built-in Constant Slope Circuit

APPLICATIONS

- Power source for portable communication equipment.
- Power source for electrical appliances such as cameras, VCRs and camcorders.
- Power source for battery-powered equipment.

BLOCK DIAGRAMS

RP110xxxxB

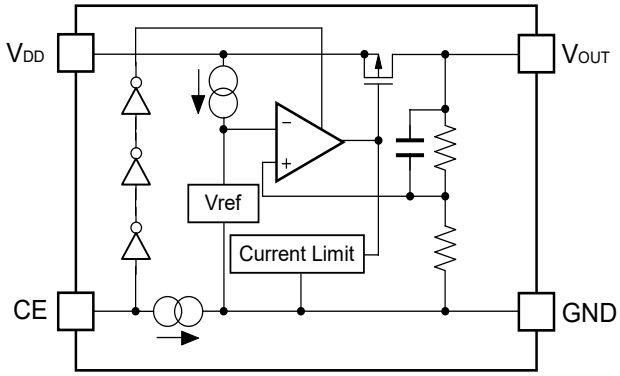

RP110xxxxC

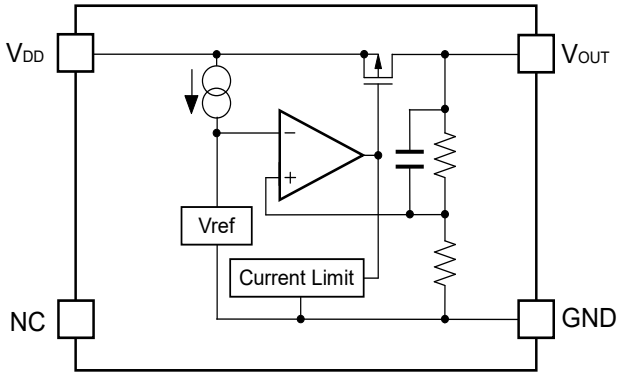

RP110xxxxD

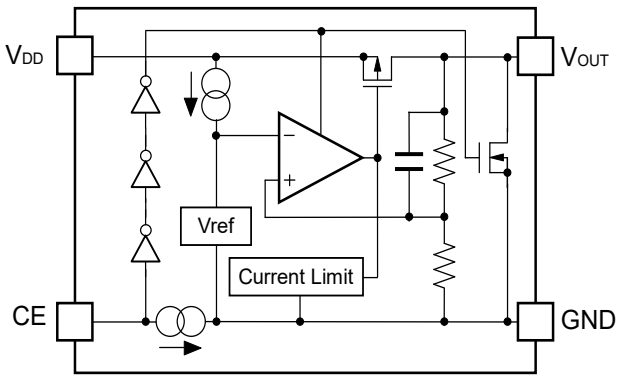

SELECTION GUIDE

The output voltage, chip enable circuit, auto discharge function, package for the ICs can be selected at the user's request.

Product Name	Package	Quantity per Reel	Pb Free	Halogen Free
RP110Kxx1∗-TR	DFN(PL)0808-4	10,000 pcs	Yes	Yes
RP110Lxx1∗-TR	DFN1010-4	10,000 pcs	Yes	Yes
RP110Qxx2∗-TR-FE	SC-88A	3,000 pcs	Yes	Yes
RP110Nxx1∗-TR-FE	SOT-23-5	3,000 pcs	Yes	Yes

xx: Output voltage (V_{OUT}) is selectable from 0.8V to 3.6V in 0.1V increments.
The second decimal point is described as below.

Ex.1.25V: RP110x12xx5
2.85V: RP110x28xx5

∗: Selections of CE pin and Auto-discharge function are as shown below.

B: CE "H" active, Auto-discharge function: No

C: CE is unavailable, Auto-discharge function: No

D: CE "H" active, Auto-discharge function: Yes

PIN CONFIGURATIONS

● **DFN(PL)0808-4**

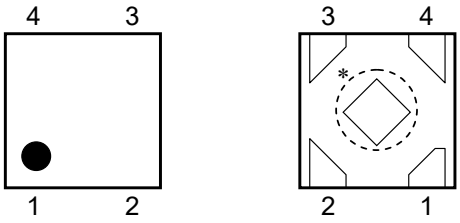

● **DFN1010-4**

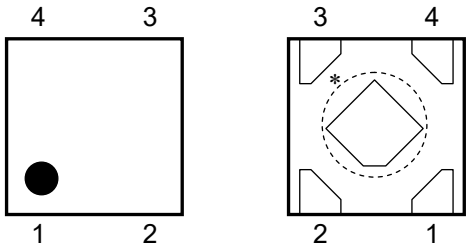

● **SC-88A**

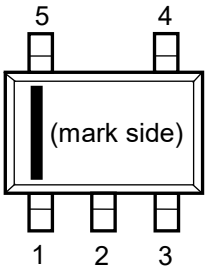

● **SOT-23-5**

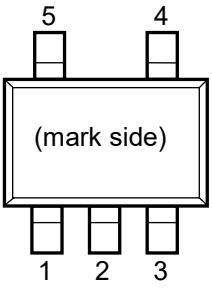

PIN DESCRIPTIONS

● **DFN(PL)0808-4**

Pin No	Symbol	Pin Description
1	V_{OUT}	Output Pin
2	GND	Ground Pin
3	CE / NC	Chip Enable Pin ("H" Active) / No connection
4	V_{DD}	Input Pin

∗) Tab is GND level. (They are connected to the reverse side of this IC.)
The tab is better to be connected to the GND, but leaving it open is also acceptable.

● **DFN1010-4**

Pin No.	Symbol	Description
1	V_{OUT}	Output Pin
2	GND	Ground Pin
3	CE / NC	Chip Enable Pin ("H" Active) / No connection
4	V_{DD}	Input Pin

∗) Tab is GND level. (They are connected to the reverse side of this IC.)
The tab is better to be connected to the GND, but leaving it open is also acceptable.

- **SC-88A**

Pin No.	Symbol	Description
1	CE / NC	Chip Enable Pin ("H" Active) / No connection
2 *	NC	No connection
3	GND	Ground Pin
4	V_{OUT}	Output Pin
5	V_{DD}	Input Pin

*) Pin No. 2 is connected to the bottom of the IC. It is recommended that the pin be connected to the ground plane on the board, or otherwise be left floating so that there is no contact with other potentials.

- **SOT-23-5**

Pin No	Symbol	Pin Description
1	V_{DD}	Input Pin
2	GND	Ground Pin
3	CE / NC	Chip Enable Pin ("H" Active) / No connection
4	NC	No Connection
5	V_{OUT}	Output Pin

ABSOLUTE MAXIMUM RATINGS

Symbol	Item	Rating		Unit
V_{IN}	Input Voltage	6.0		V
V_{CE}	Input Voltage (CE Pin)	6.0		V
V_{OUT}	Output Voltage	−0.3 to V_{IN}+0.3		V
I_{OUT}	Output Current	180		mA
P_D	Power Dissipation*	DFN(PL)0808-4 Standard Land Pattern	286	mW
		DFN1010-4 JEDEC STD. 51	1000	
		SC-88A Standard Land Pattern	380	
		SOT-23-5 JEDEC STD. 51	660	
Topt	Operating Temperature Range	−40 to 85		°C
Tstg	Storage Temperature Range	−55 to 125		°C

*) For Power Dissipation, please refer to PACKAGE INFORMATION.

ABSOLUTE MAXIMUM RATINGS

Electronic and mechanical stress momentarily exceeded absolute maximum ratings may cause the permanent damages and may degrade the life time and safety for both device and system using the device in the field. The functional operation at or over these absolute maximum ratings is not assured.

ELECTRICAL CHARACTERISTICS

Unless otherwise noted,

V_{IN} = Set V_{OUT} + 1.0V (V_{OUT} > 1.5), V_{IN} = 2.5V (V_{OUT} ≤ 1.5V), I_{OUT} = 1mA, C_{IN} = C_{OUT} = 0.1µF.
The specifications surrounded by [ ] are guaranteed by Design Engineering at - 40°C ≤ Ta ≤85°C.

RP110xxxxx Ta=25°C

Symbol	Item	Conditions		Min.	Typ.	Max.	Unit
V_{OUT}	Output Voltage	Ta = 25°C	V_{OUT} > 2.0V	× 0.99		× 1.01	V
			V_{OUT} ≤ 2.0V	-20		20	mV
		-40°C ≤ Ta ≤ 85°C	V_{OUT} > 2.0V	[× 0.97]		[×1.025]	V
			V_{OUT} ≤ 2.0V	[-60]		[50]	mV
I_{OUT}	Output Current			[150]			mA
ΔV_{OUT} /ΔI_{OUT}	Load Regulation	1mA ≤ I_{OUT} ≤ 150mA		[-20]	0	[20]	mV
V_{DIF}	Dropout Voltage	Please refer to "Dropout Voltage".					
I_{SS}	Supply Current	I_{OUT} = 0mA			1	[2.0]	µA
Istandby	Standby Current	V_{CE} =0V			0.1	1.0	µA
ΔV_{OUT} /ΔV_{IN}	Line Regulation	Set V_{OUT}0.5V ≤ V_{IN} ≤ 5.0V			0.02	[0.10]	%/V
V_{IN}	Input Voltage *			[1.4]		[5.25]	V
ΔV_{OUT} /ΔTa	Output Voltage Temperature Coefficient	-40°C ≤ Ta ≤ 85°C			±100		ppm /°C
I_{SC}	Short Current Limit	V_{OUT} = 0V			50		mA
I_{CE}	CE Pull-down Current (Only applied to B/D versions)				0.3		µA
V_{CEH}	CE input Voltage "H" (Only for B/D versions)			[1.0]			V
V_{CEL}	CE Input Voltage "L" (Only applied to B/D versions)					[0.4]	V
R_{LOW}	LOW Output Nch ON Resistance (Only applied to D version)	V_{IN} = 4.0V, V_{CE} = 0V			60		Ω

All test categories were tested on the products under the pulse load condition (Tj ≈ Ta = 25ºC) except "Output Voltage Temperature Coefficient".
*) The maximum input voltage (electrical characteristics) is 5.25V. In case of exceeding this value, the maximum input voltage cannot be over 5.5V and the total operating time has to be within 500hrs.

The specifications surrounded by ☐ are guaranteed by Design Engineering at - 40°C ≤ Ta ≤85°C.

• Dropout Voltage

Ta=25°C

Output Voltage V_{OUT} (V)	Dropout Voltage V_{DIF} (V)		
	Condition	Typ.	Max.
0.8 ≤ V_{OUT} < 0.9	I_{OUT}=150mA	0.96	1.40
0.9 ≤ V_{OUT} < 1.0		0.87	1.25
1.0 ≤ V_{OUT} < 1.2		0.78	1.15
1.2 ≤ V_{OUT} < 1.4		0.64	1.00
1.4 ≤ V_{OUT} < 1.7		0.52	0.80
1.7 ≤ V_{OUT} < 2.0		0.40	0.60
2.0 ≤ V_{OUT} < 2.5		0.32	0.48
2.5 ≤ V_{OUT} < 3.0		0.28	0.40
3.0 ≤ V_{OUT} ≤ 3.6		0.25	0.35

RECOMMENDED OPERATING CONDITIONS (ELECTRICAL CHARACTERISTICS)

All of electronic equipment should be designed that the mounted semiconductor devices operate within the recommended operating conditions. The semiconductor devices cannot operate normally over the recommended operating conditions, even if when they are used over such conditions by momentary electronic noise or surge. And the semiconductor devices may receive serious damage when they continue to operate over the recommended operating conditions.

TYPICAL APPLICATION

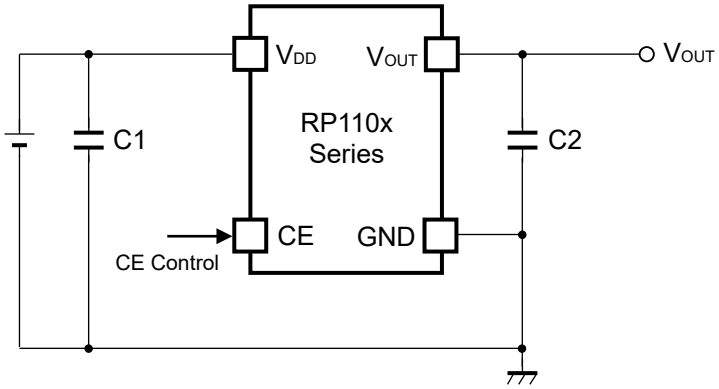

(External Components)
C2 0.1μF MURATA: GRM155B31C104KA87B

TECHNICAL NOTES

When using these ICs, consider the following points:

Phase Compensation

In these ICs, phase compensation is made for securing stable operation even if the load current is varied. For this purpose, use a capacitor C2 with good frequency characteristics and ESR (Equivalent Series Resistance). (Note: If additional ceramic capacitors are connected with parallel to the output pin with an output capacitor for phase compensation, the operation might be unstable. Because of this, test these ICs with as same external components as ones to be used on the PCB.)

PCB Layout

Make V_{DD} and GND lines sufficient. If their impedance is high, noise pickup or unstable operation may result. Connect a capacitor C1 with a capacitance value as much as 0.1μF or more between V_{DD} and GND pin, and as close as possible to the pins.

Set external components, especially the output capacitor C2, as close as possible to the ICs, and make wiring as short as possible.

CONSTANT SLOPE CIRCUITS

The RP110x Series is equipped with a constant slope circuit as a soft-start circuit, which allows the output voltage to start up gradually when the CE is turned on.

The constant slope circuit minimizes the inrush current at the start-up and also prevents the overshoot of the output voltage.

The capacitor to create the start-up slope is built in the IC that does not require any external components. The start-up time and the start-up slope angle are fixed inside the IC.

If the capacitance of the external output capacitor (C_{OUT}) becomes more than the certain capacitance, the output current limit circuit minimizes the incoming current of the output capacitor at the start-up. As a result, the start-up time becomes longer and the start-up slope angle becomes more gentle. As “Inrush Current Characteristics Example” below shows, if the C_{OUT} is less than 4.7µF, the constant slope circuit easily starts to function at the start-up, likewise, if the C_{OUT} is over 10µF, the output current limit circuit easily starts to function at the start-up. The boundary point of using these two circuits is inversely proportional to the output voltage. If the output voltage is higher, the output current limit circuit easily starts to function even if the C_{OUT} capacitance is small. For more details, please refer to the graph 14 of “Inrush Current Characteristics Example”.

Inrush Current Characteristics Example (C1=none, I_{OUT}=0mA, Topt=25ºC)

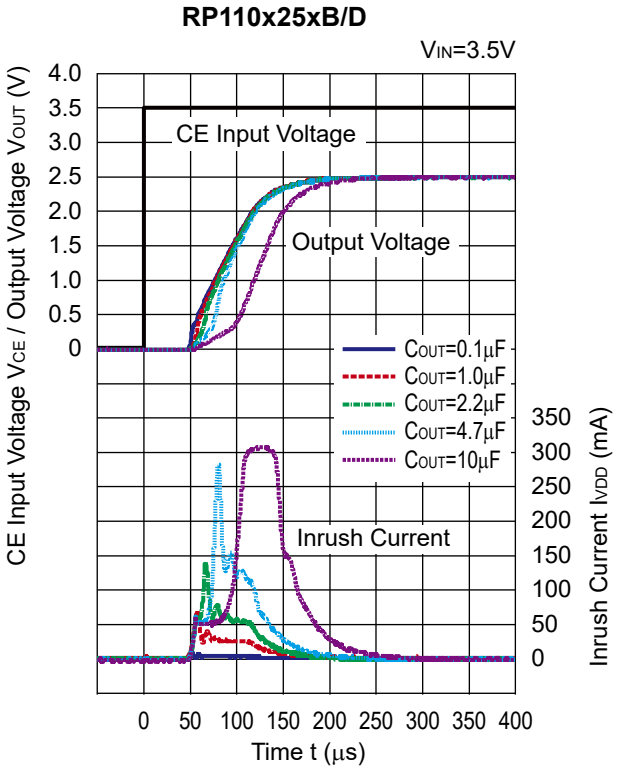

PACKAGE INFORMATION

• Power Dissipation (DFN (PL) 0808-4)

Power Dissipation (P_D) depends on conditions of mounting on board. This specification is based on the measurement at the condition below:

Measurement Conditions:

	Standard Test Land Pattern
Environment	Mounting on Board (Wind velocity=0m/s)
Board Material	Glass cloth epoxy plastic (Double-sided)
Board Dimensions	40mm × 40mm × 1.6mm
Copper Ratio	Top side: Approx. 50%, Back side: Approx. 50%
Through-holes	ϕ 0.5mm × 24pcs

Measurement Results: **(Ta=25°C)**

	Standard Test Land Pattern
Power Dissipation	286mW (Tjmax=125°C) 358mW (Tjmax=150°C)
Thermal Resistance	θja = (125-25°C)/0.286W= 350°C/W
	θjc= 90°C/W

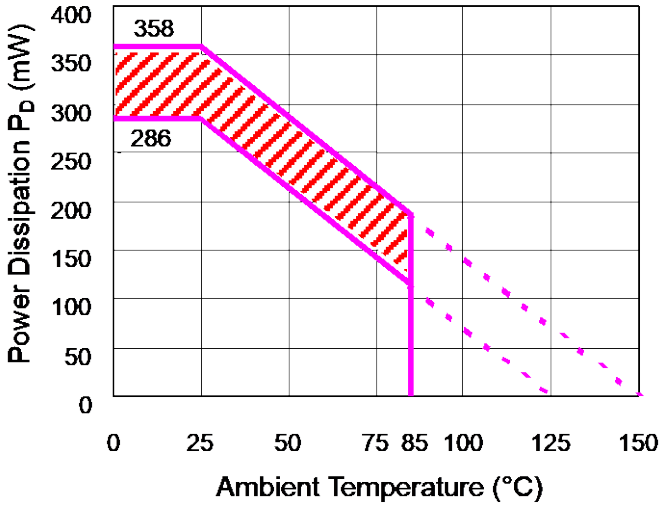

Power Dissipation

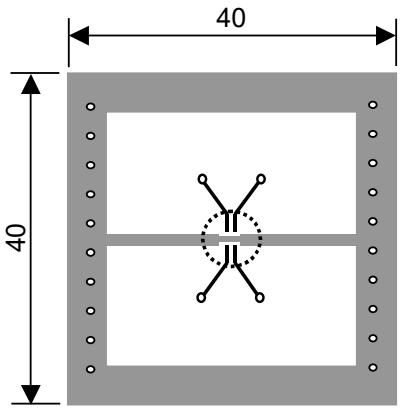

Measurement Board Pattern

IC Mount Area (Unit: mm)

The above graph shows the Power Dissipation of the package under the conditions of Tjmax=125°C and Tjmax=150°C.
The operation of the IC within the shaded range in the graph might have an affect on the IC's lifetime.
The operation time of the IC must be remained within the time limit described in the table below.

Operating Time	Estimated Years (Operating four hours/day)
13,000 hours	9 years

- **Package Dimensions (DFN (PL) 0808-4)**

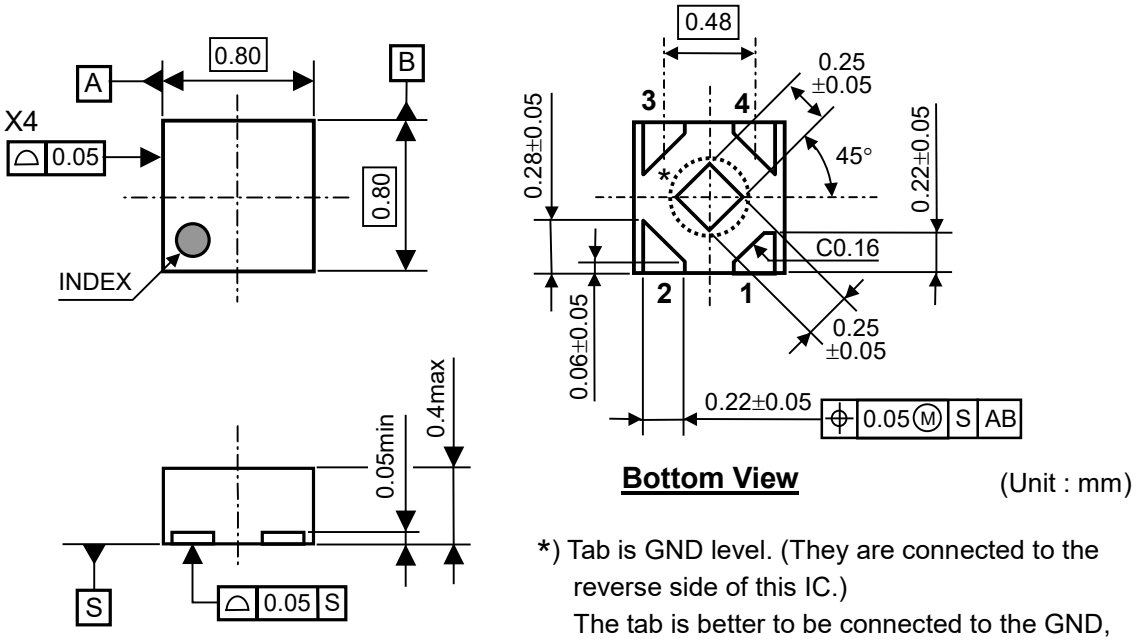

(Unit : mm)

*) Tab is GND level. (They are connected to the reverse side of this IC.)
The tab is better to be connected to the GND, but leaving it open is also acceptable.

- **Mark Specification (DFN (PL) 0808-4)**

①: Product Code … Refer to “RP110K Series Mark Specification Table”.
②③: Lot Number … Alphanumeric Serial Number

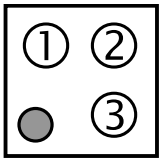

- **RP110K Series Mark Specification Table (DFN(PL)0808-4)**

RP110Kxx1B

Product Name	①	V_{SET}
RP110K081B	B	0.8V
RP110K091B	B	0.9V
RP110K101B	B	1.0V
RP110K111B	B	1.1V
RP110K121B	B	1.2V
RP110K131B	B	1.3V
RP110K141B	B	1.4V
RP110K151B	B	1.5V
RP110K161B	B	1.6V
RP110K171B	B	1.7V
RP110K181B	B	1.8V
RP110K191B	B	1.9V
RP110K201B	B	2.0V
RP110K211B	B	2.1V
RP110K221B	B	2.2V
RP110K231B	B	2.3V
RP110K241B	B	2.4V
RP110K251B	B	2.5V
RP110K261B	B	2.6V
RP110K271B	B	2.7V
RP110K281B	B	2.8V
RP110K291B	B	2.9V
RP110K301B	B	3.0V
RP110K311B	B	3.1V
RP110K321B	B	3.2V
RP110K331B	B	3.3V
RP110K341B	B	3.4V
RP110K351B	B	3.5V
RP110K361B	B	3.6V
RP110K121B5	B	1.25V
RP110K181B5	B	1.85V
RP110K281B5	B	2.85V
RP110K191B5	B	1.95V
RP110K091B5	B	0.95V

RP110Kxx1C

Product Name	①	V_{SET}
RP110K081C	B	0.8V
RP110K091C	B	0.9V
RP110K101C	B	1.0V
RP110K111C	B	1.1V
RP110K121C	B	1.2V
RP110K131C	B	1.3V
RP110K141C	B	1.4V
RP110K151C	B	1.5V
RP110K161C	B	1.6V
RP110K171C	B	1.7V
RP110K181C	B	1.8V
RP110K191C	B	1.9V
RP110K201C	B	2.0V
RP110K211C	B	2.1V
RP110K221C	B	2.2V
RP110K231C	B	2.3V
RP110K241C	B	2.4V
RP110K251C	B	2.5V
RP110K261C	B	2.6V
RP110K271C	B	2.7V
RP110K281C	B	2.8V
RP110K291C	B	2.9V
RP110K301C	B	3.0V
RP110K311C	B	3.1V
RP110K321C	B	3.2V
RP110K331C	B	3.3V
RP110K341C	B	3.4V
RP110K351C	B	3.5V
RP110K361C	B	3.6V
RP110K121C5	B	1.25V
RP110K181C5	B	1.85V
RP110K281C5	B	2.85V
RP110K191C5	B	1.95V
RP110K091C5	B	0.95V

RP110Kxx1D

Product Name	①	V_{SET}
RP110K081D	B	0.8V
RP110K091D	B	0.9V
RP110K101D	B	1.0V
RP110K111D	B	1.1V
RP110K121D	B	1.2V
RP110K131D	B	1.3V
RP110K141D	B	1.4V
RP110K151D	B	1.5V
RP110K161D	B	1.6V
RP110K171D	B	1.7V
RP110K181D	B	1.8V
RP110K191D	B	1.9V
RP110K201D	B	2.0V
RP110K211D	B	2.1V
RP110K221D	B	2.2V
RP110K231D	B	2.3V
RP110K241D	B	2.4V
RP110K251D	B	2.5V
RP110K261D	B	2.6V
RP110K271D	B	2.7V
RP110K281D	B	2.8V
RP110K291D	B	2.9V
RP110K301D	B	3.0V
RP110K311D	B	3.1V
RP110K321D	B	3.2V
RP110K331D	B	3.3V
RP110K341D	B	3.4V
RP110K351D	B	3.5V
RP110K361D	B	3.6V
RP110K121D5	B	1.25V
RP110K181D5	B	1.85V
RP110K281D5	B	2.85V
RP110K191D5	B	1.95V
RP110K091D5	B	0.95V

• Power Dissipation (DFN1010-4)

The power dissipation of the package is dependent on PCB material, layout, and environmental conditions. The following measurement conditions are based on JEDEC STD. 51-7.

Measurement Conditions

Item	Measurement Conditions
Environment	Mounting on Board (Wind Velocity = 0 m/s)
Board Material	Glass Cloth Epoxy Plastic (Four-Layer Board)
Board Dimensions	76.2 mm × 114.3 mm × 0.8 mm
Copper Ratio	Outer Layer (First Layer): Less than 95% of 50 mm Square Inner Layers (Second and Third Layers): Approx. 100% of 50 mm Square Outer Layer (Fourth Layer): Approx. 100% of 50 mm Square
Through-holes	ϕ 0.2 mm × 21 pcs

Measurement Result (Ta = 25°C, Tjmax = 125°C)

Item	Measurement Result
Power Dissipation	1000 mW
Thermal Resistance (θja)	θja = 100°C/W
Thermal Characterization Parameter (ψjt)	ψjt = 41°C/W

θja: Junction-to-Ambient Thermal Resistance
ψjt: Junction-to-Top Thermal Characterization Parameter

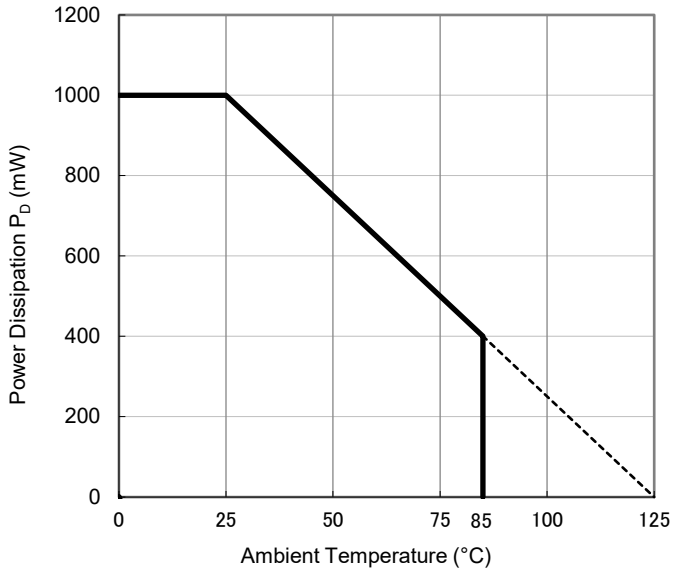

Power Dissipation vs. Ambient Temperature

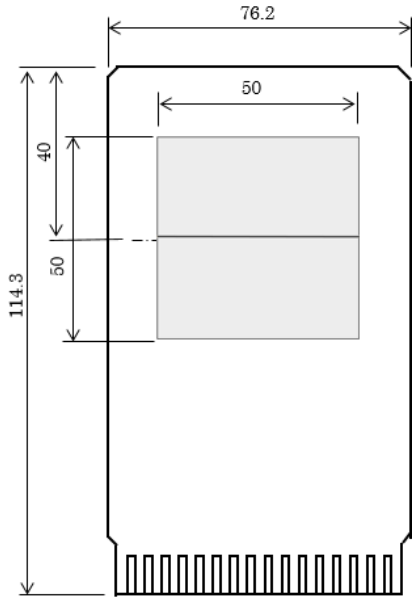

Measurement Board Pattern

Package Dimensions (DFN1010-4)

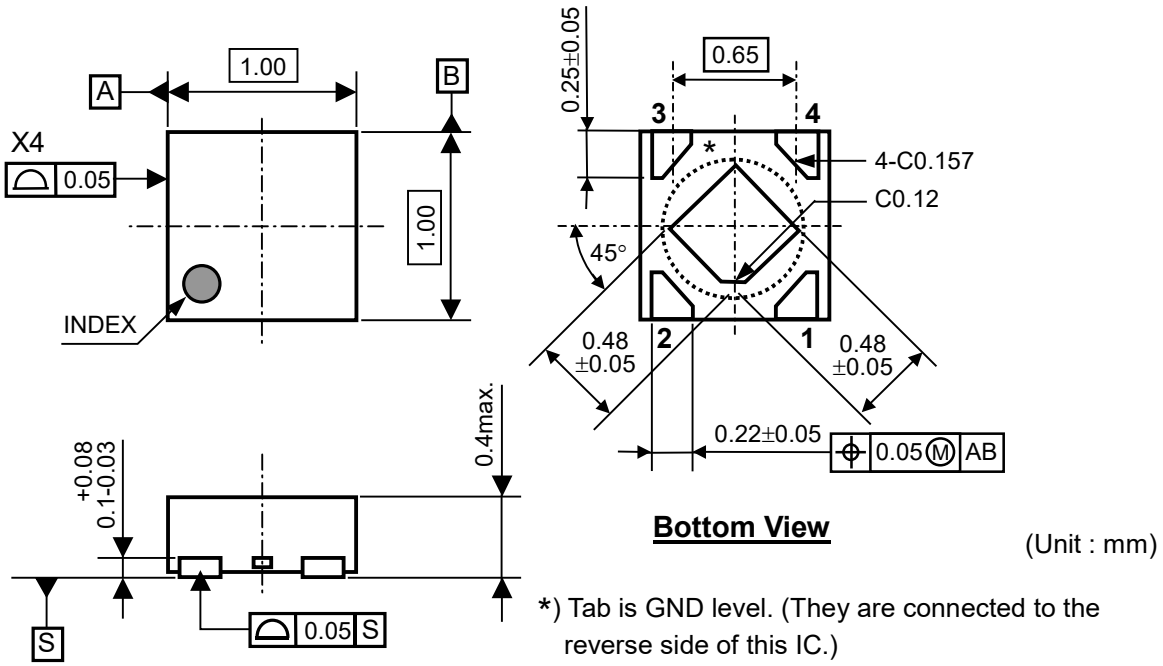

(Unit : mm)

*) Tab is GND level. (They are connected to the reverse side of this IC.)
The tab is better to be connected to the GND, but leaving it open is also acceptable.

- **Mark Specification (DFN1010-4)**

①②: Product Code …Refer to “RP110L Series Mark Specification Table” .
③④: Lot Number … Alphanumeric Serial Number

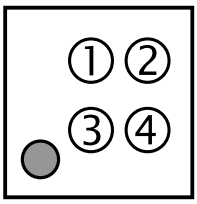

- **RP110L Series Mark Specification Table (DFN1010-4)**

RP110Lxx1B

Product Name	①②	V_{SET}
RP110L081B	00	0.8V
RP110L091B	01	0.9V
RP110L101B	02	1.0V
RP110L111B	03	1.1V
RP110L121B	04	1.2V
RP110L131B	06	1.3V
RP110L141B	07	1.4V
RP110L151B	08	1.5V
RP110L161B	09	1.6V
RP110L171B	10	1.7V
RP110L181B	11	1.8V
RP110L191B	13	1.9V
RP110L201B	14	2.0V
RP110L211B	15	2.1V
RP110L221B	16	2.2V
RP110L231B	17	2.3V
RP110L241B	18	2.4V
RP110L251B	19	2.5V
RP110L261B	20	2.6V
RP110L271B	21	2.7V
RP110L281B	22	2.8V
RP110L291B	24	2.9V
RP110L301B	25	3.0V
RP110L311B	26	3.1V
RP110L321B	27	3.2V
RP110L331B	28	3.3V
RP110L341B	29	3.4V
RP110L351B	30	3.5V
RP110L361B	31	3.6V
RP110L121B5	05	1.25V
RP110L181B5	12	1.85V
RP110L281B5	23	2.85V
RP110L191B5	96	1.95V
RP110L091B5	99	0.95V

RP110Lxx1C

Product Name	①②	V_{SET}
RP110L081C	32	0.8V
RP110L091C	33	0.9V
RP110L101C	34	1.0V
RP110L111C	35	1.1V
RP110L121C	36	1.2V
RP110L131C	38	1.3V
RP110L141C	39	1.4V
RP110L151C	40	1.5V
RP110L161C	41	1.6V
RP110L171C	42	1.7V
RP110L181C	43	1.8V
RP110L191C	45	1.9V
RP110L201C	46	2.0V
RP110L211C	47	2.1V
RP110L221C	48	2.2V
RP110L231C	49	2.3V
RP110L241C	50	2.4V
RP110L251C	51	2.5V
RP110L261C	52	2.6V
RP110L271C	53	2.7V
RP110L281C	54	2.8V
RP110L291C	56	2.9V
RP110L301C	57	3.0V
RP110L311C	58	3.1V
RP110L321C	59	3.2V
RP110L331C	60	3.3V
RP110L341C	61	3.4V
RP110L351C	62	3.5V
RP110L361C	63	3.6V
RP110L121C5	37	1.25V
RP110L181C5	44	1.85V
RP110L281C5	55	2.85V
RP110L191C5	98	1.95V
RP110L091C5	A0	0.95V

RP110Lxx1D

Product Name	①②	V_{SET}
RP110L081D	64	0.8V
RP110L091D	65	0.9V
RP110L101D	66	1.0V
RP110L111D	67	1.1V
RP110L121D	68	1.2V
RP110L131D	70	1.3V
RP110L141D	71	1.4V
RP110L151D	72	1.5V
RP110L161D	73	1.6V
RP110L171D	74	1.7V
RP110L181D	75	1.8V
RP110L191D	77	1.9V
RP110L201D	78	2.0V
RP110L211D	79	2.1V
RP110L221D	80	2.2V
RP110L231D	81	2.3V
RP110L241D	82	2.4V
RP110L251D	83	2.5V
RP110L261D	84	2.6V
RP110L271D	85	2.7V
RP110L281D	86	2.8V
RP110L291D	88	2.9V
RP110L301D	89	3.0V
RP110L311D	90	3.1V
RP110L321D	91	3.2V
RP110L331D	92	3.3V
RP110L341D	93	3.4V
RP110L351D	94	3.5V
RP110L361D	95	3.6V
RP110L121D5	69	1.25V
RP110L181D5	76	1.85V
RP110L281D5	87	2.85V
RP110L191D5	97	1.95V
RP110L091D5	A1	0.95V

• Power Dissipation (SC-88A)

Power Dissipation (P_D) depends on conditions of mounting on board. This specification is based on the measurement at the condition below:

Measurement Conditions:

	Standard Land Pattern
Environment	Mounting on Board (Wind velocity=0m/s)
Board Material	Glass cloth epoxy plastic (Double Layers)
Board Dimensions	40mm × 40mm × 1.6mm
Copper Ratio	Top side: Approx. 50%, Back side: Approx. 50%
Through-hole	ϕ0.5mm × 44pcs

Measurement Results: **(Ta=25°C)**

	Standard Land Pattern	Free Air
Power Dissipation	380mW (Tjmax=125°C) 475mW (Tjmax=150°C)	150mW
Thermal Resistance	θja=(125-25°C)/0.38W=263°C/W	θja=(125-25°C)/0.15W=667°C/W
	θjc=75°C/W	-

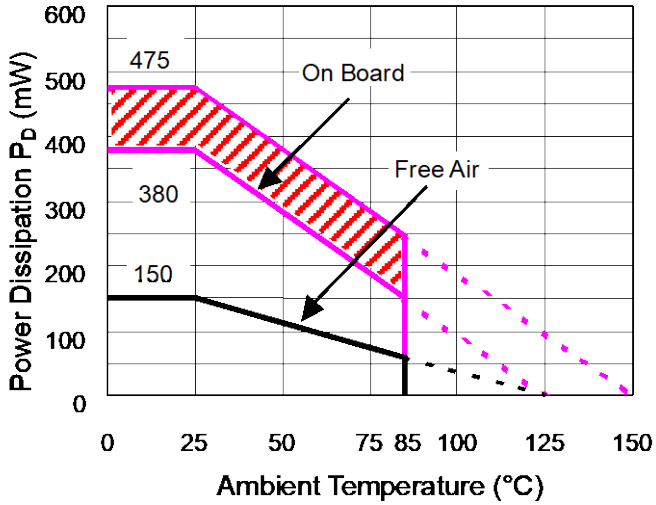

Power Dissipation

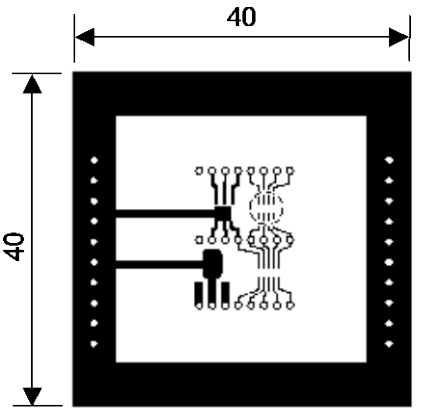

Measurement Board Pattern

IC Mount Area (Unit: mm)

The above graph shows the Power Dissipation of the package under the conditions of Tjmax=125°C and Tjmax=150°C.
The operation of the IC within the shaded range in the graph might have an affect on the IC's lifetime. The operation time of the IC must be remained within the time limit described in the table below.

Operating Time	Estimated Years (Operating four hours/day)
13,000 hours	9 years

- **Package Dimensions (SC-88A)**

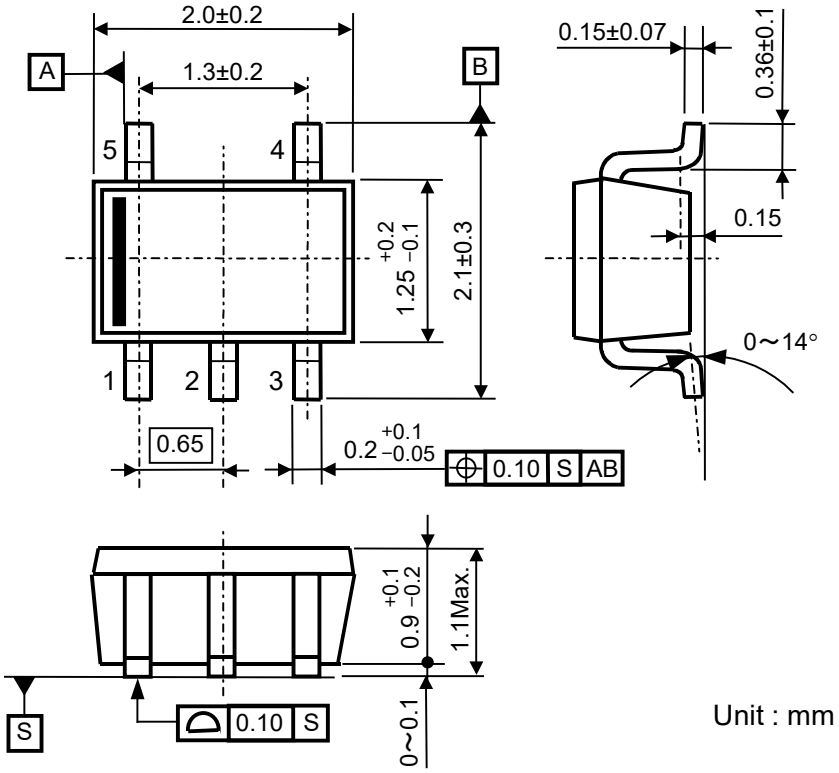

Unit : mm

- **Mark Specification (SC-88A)**

①②③④: Product Code …Refer to “RP110Q Series Mark Specification Table”.
⑤⑥: Lot Number … Alphanumeric Serial Number

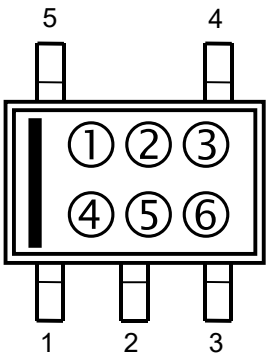

- **RP110Q Series Mark Specification Table (SC-88A)**

RP110Qxx2B

Product Name	①②③④	V_{SET}
RP110Q082B	AN08	0.8V
RP110Q092B	AN09	0.9V
RP110Q102B	AN10	1.0V
RP110Q112B	AN11	1.1V
RP110Q122B	AN12	1.2V
RP110Q132B	AN13	1.3V
RP110Q142B	AN14	1.4V
RP110Q152B	AN15	1.5V
RP110Q162B	AN16	1.6V
RP110Q172B	AN17	1.7V
RP110Q182B	AN18	1.8V
RP110Q192B	AN19	1.9V
RP110Q202B	AN20	2.0V
RP110Q212B	AN21	2.1V
RP110Q222B	AN22	2.2V
RP110Q232B	AN23	2.3V
RP110Q242B	AN24	2.4V
RP110Q252B	AN25	2.5V
RP110Q262B	AN26	2.6V
RP110Q272B	AN27	2.7V
RP110Q282B	AN28	2.8V
RP110Q292B	AN29	2.9V
RP110Q302B	AN30	3.0V
RP110Q312B	AN31	3.1V
RP110Q322B	AN32	3.2V
RP110Q332B	AN33	3.3V
RP110Q342B	AN34	3.4V
RP110Q352B	AN35	3.5V
RP110Q362B	AN36	3.6V
RP110Q122B5	AN37	1.25V
RP110Q182B5	AN38	1.85V
RP110Q282B5	AN39	2.85V
RP110Q192B5	AN40	1.95V
RP110Q092B5	AN41	0.95V

RP110Qxx2C

Product Name	①②③④	V_{SET}
RP110Q082C	AP08	0.8V
RP110Q092C	AP09	0.9V
RP110Q102C	AP10	1.0V
RP110Q112C	AP11	1.1V
RP110Q122C	AP12	1.2V
RP110Q132C	AP13	1.3V
RP110Q142C	AP14	1.4V
RP110Q152C	AP15	1.5V
RP110Q162C	AP16	1.6V
RP110Q172C	AP17	1.7V
RP110Q182C	AP18	1.8V
RP110Q192C	AP19	1.9V
RP110Q202C	AP20	2.0V
RP110Q212C	AP21	2.1V
RP110Q222C	AP22	2.2V
RP110Q232C	AP23	2.3V
RP110Q242C	AP24	2.4V
RP110Q252C	AP25	2.5V
RP110Q262C	AP26	2.6V
RP110Q272C	AP27	2.7V
RP110Q282C	AP28	2.8V
RP110Q292C	AP29	2.9V
RP110Q302C	AP30	3.0V
RP110Q312C	AP31	3.1V
RP110Q322C	AP32	3.2V
RP110Q332C	AP33	3.3V
RP110Q342C	AP34	3.4V
RP110Q352C	AP35	3.5V
RP110Q362C	AP36	3.6V
RP110Q122C5	AP37	1.25V
RP110Q182C5	AP38	1.85V
RP110Q282C5	AP39	2.85V
RP110Q192C5	AP40	1.95V
RP110Q092C5	AP41	0.95V

RP110Qxx2D

Product Name	①②③④	V_{SET}
RP110Q082D	AQ08	0.8V
RP110Q092D	AQ09	0.9V
RP110Q102D	AQ10	1.0V
RP110Q112D	AQ11	1.1V
RP110Q122D	AQ12	1.2V
RP110Q132D	AQ13	1.3V
RP110Q142D	AQ14	1.4V
RP110Q152D	AQ15	1.5V
RP110Q162D	AQ16	1.6V
RP110Q172D	AQ17	1.7V
RP110Q182D	AQ18	1.8V
RP110Q192D	AQ19	1.9V
RP110Q202D	AQ20	2.0V
RP110Q212D	AQ21	2.1V
RP110Q222D	AQ22	2.2V
RP110Q232D	AQ23	2.3V
RP110Q242D	AQ24	2.4V
RP110Q252D	AQ25	2.5V
RP110Q262D	AQ26	2.6V
RP110Q272D	AQ27	2.7V
RP110Q282D	AQ28	2.8V
RP110Q292D	AQ29	2.9V
RP110Q302D	AQ30	3.0V
RP110Q312D	AQ31	3.1V
RP110Q322D	AQ32	3.2V
RP110Q332D	AQ33	3.3V
RP110Q342D	AQ34	3.4V
RP110Q352D	AQ35	3.5V
RP110Q362D	AQ36	3.6V
RP110Q122D5	AQ37	1.25V
RP110Q182D5	AQ38	1.85V
RP110Q282D5	AQ39	2.85V
RP110Q192D5	AQ40	1.95V
RP110Q092D5	AQ41	0.95V

• Power Dissipation (SOT-23-5)

The power dissipation of the package is dependent on PCB material, layout, and environmental conditions. The following measurement conditions are based on JEDEC STD. 51-7.

Measurement Conditions

Item	Measurement Conditions
Environment	Mounting on Board (Wind Velocity = 0 m/s)
Board Material	Glass Cloth Epoxy Plastic (Four-Layer Board)
Board Dimensions	76.2 mm × 114.3 mm × 0.8 mm
Copper Ratio	Outer Layer (First Layer): Less than 95% of 50 mm Square Inner Layers (Second and Third Layers): Approx. 100% of 50 mm Square Outer Layer (Fourth Layer): Approx. 100% of 50 mm Square
Through-holes	ϕ 0.3 mm × 7 pcs

Measurement Result (Ta = 25°C, Tjmax = 125°C)

Item	Measurement Result
Power Dissipation	660 mW
Thermal Resistance (θja)	θja = 150°C/W
Thermal Characterization Parameter (ψjt)	ψjt = 51°C/W

θja: Junction-to-Ambient Thermal Resistance
ψjt: Junction-to-Top Thermal Characterization Parameter

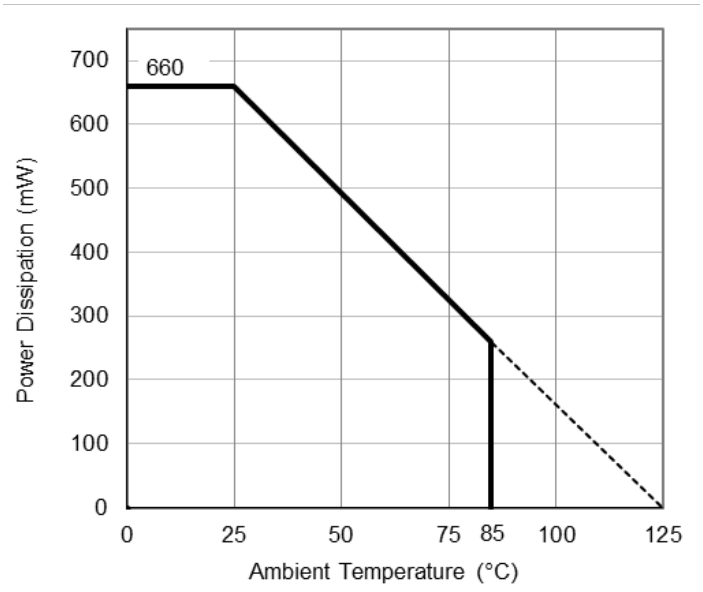

Power Dissipation vs. Ambient Temperature

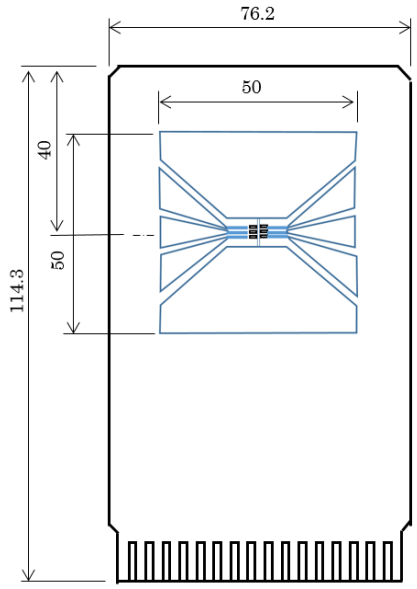

Measurement Board Pattern

•

- **Package Dimensions (SOT-23-5)**

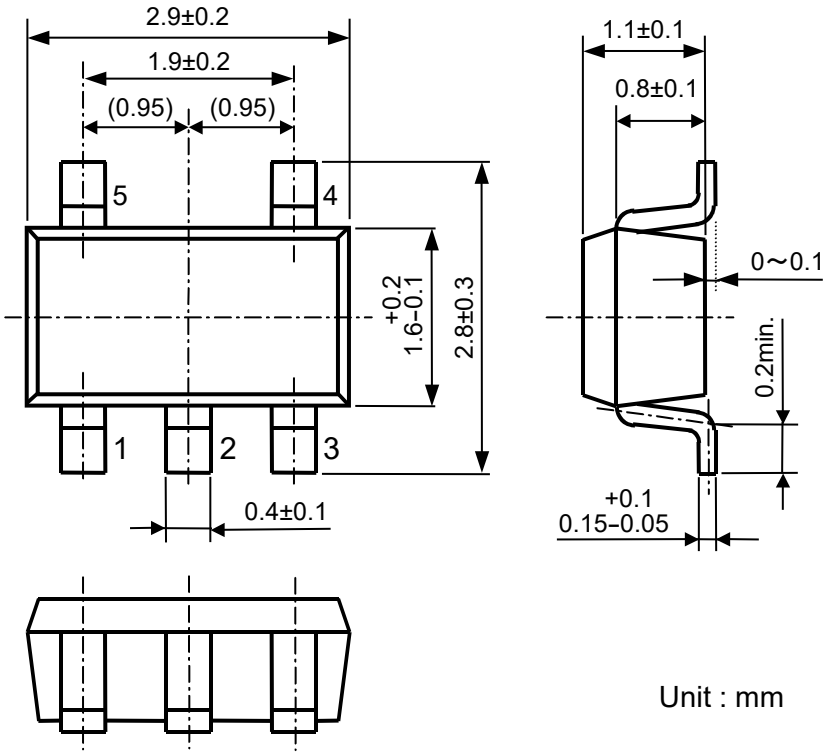

Unit : mm

- **Mark Specification (SOT-23-5)**

①②③: Product Code …Refer to “RP110N Series Mark Specification Table”.
④⑤: Lot Number … Alphanumeric Serial Number

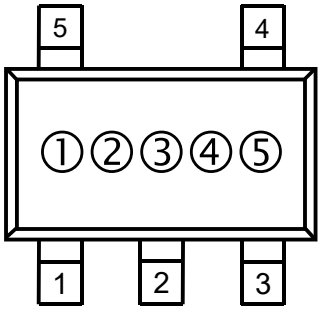

- **RP110N Series Mark Specification Table (SOT-23-5)**

RP110Nxx1B

Product Name	①②③	V_{SET}
RP110N081B	A08	0.8V
RP110N091B	A09	0.9V
RP110N101B	A10	1.0V
RP110N111B	A11	1.1V
RP110N121B	A12	1.2V
RP110N131B	A13	1.3V
RP110N141B	A14	1.4V
RP110N151B	A15	1.5V
RP110N161B	A16	1.6V
RP110N171B	A17	1.7V
RP110N181B	A18	1.8V
RP110N191B	A19	1.9V
RP110N201B	A20	2.0V
RP110N211B	A21	2.1V
RP110N221B	A22	2.2V
RP110N231B	A23	2.3V
RP110N241B	A24	2.4V
RP110N251B	A25	2.5V
RP110N261B	A26	2.6V
RP110N271B	A27	2.7V
RP110N281B	A28	2.8V
RP110N291B	A29	2.9V
RP110N301B	A30	3.0V
RP110N311B	A31	3.1V
RP110N321B	A32	3.2V
RP110N331B	A33	3.3V
RP110N341B	A34	3.4V
RP110N351B	A35	3.5V
RP110N361B	A36	3.6V
RP110N121B5	A37	1.25V
RP110N181B5	A38	1.85V
RP110N281B5	A39	2.85V
RP110N191B5	A40	1.95V
RP110N091B5	A41	0.95V

RP110Nxx1C

Product Name	①②③	V_{SET}
RP110N081C	B08	0.8V
RP110N091C	B09	0.9V
RP110N101C	B10	1.0V
RP110N111C	B11	1.1V
RP110N121C	B12	1.2V
RP110N131C	B13	1.3V
RP110N141C	B14	1.4V
RP110N151C	B15	1.5V
RP110N161C	B16	1.6V
RP110N171C	B17	1.7V
RP110N181C	B18	1.8V
RP110N191C	B19	1.9V
RP110N201C	B20	2.0V
RP110N211C	B21	2.1V
RP110N221C	B22	2.2V
RP110N231C	B23	2.3V
RP110N241C	B24	2.4V
RP110N251C	B25	2.5V
RP110N261C	B26	2.6V
RP110N271C	B27	2.7V
RP110N281C	B28	2.8V
RP110N291C	B29	2.9V
RP110N301C	B30	3.0V
RP110N311C	B31	3.1V
RP110N321C	B32	3.2V
RP110N331C	B33	3.3V
RP110N341C	B34	3.4V
RP110N351C	B35	3.5V
RP110N361C	B36	3.6V
RP110N121C5	B37	1.25V
RP110N181C5	B38	1.85V
RP110N281C5	B39	2.85V
RP110N191C5	B40	1.95V
RP110N091C5	B41	0.95V

RP110Nxx1D

Product Name	①②③	V_{SET}
RP110N081D	C08	0.8V
RP110N091D	C09	0.9V
RP110N101D	C10	1.0V
RP110N111D	C11	1.1V
RP110N121D	C12	1.2V
RP110N131D	C13	1.3V
RP110N141D	C14	1.4V
RP110N151D	C15	1.5V
RP110N161D	C16	1.6V
RP110N171D	C17	1.7V
RP110N181D	C18	1.8V
RP110N191D	C19	1.9V
RP110N201D	C20	2.0V
RP110N211D	C21	2.1V
RP110N221D	C22	2.2V
RP110N231D	C23	2.3V
RP110N241D	C24	2.4V
RP110N251D	C25	2.5V
RP110N261D	C26	2.6V
RP110N271D	C27	2.7V
RP110N281D	C28	2.8V
RP110N291D	C29	2.9V
RP110N301D	C30	3.0V
RP110N311D	C31	3.1V
RP110N321D	C32	3.2V
RP110N331D	C33	3.3V
RP110N341D	C34	3.4V
RP110N351D	C35	3.5V
RP110N361D	C36	3.6V
RP110N121D5	C37	1.25V
RP110N181D5	C38	1.85V
RP110N281D5	C39	2.85V
RP110N191D5	C40	1.95V
RP110N091D5	C41	0.95V

TYPICAL CHARACTERISTICS

1) Output Voltage vs. Output Current (C1=Ceramic 0.1µF, C2=Ceramic 0.1µF, Topt=25°C)

RP110x08xx

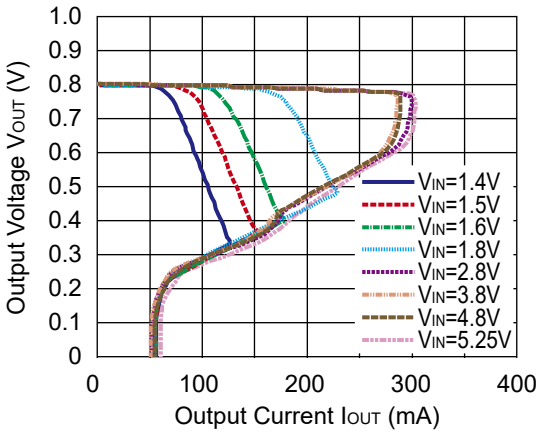

RP110x25xx

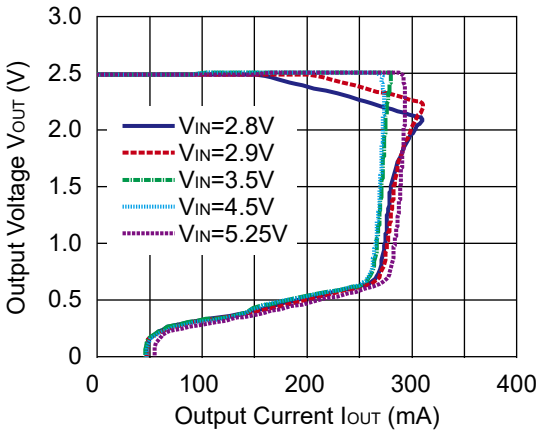

RP110x36xx

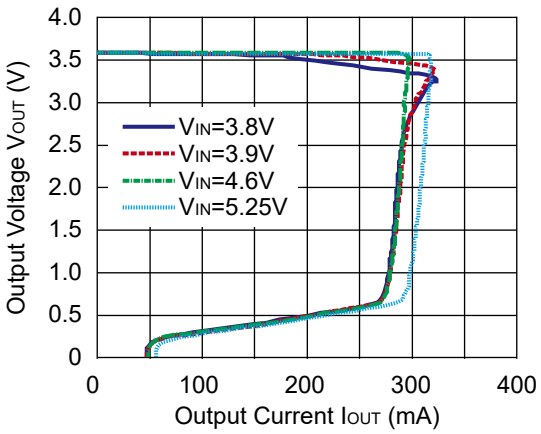

2) Output Voltage vs. Input Voltage (C1=Ceramic 0.1µF, C2=Ceramic 0.1µF, Topt=25°C)

RP110x08xx

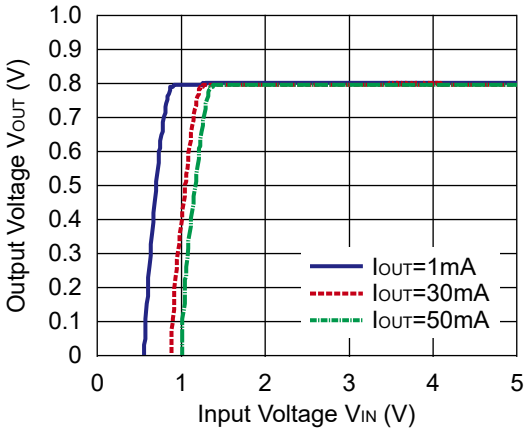

RP110x25xx

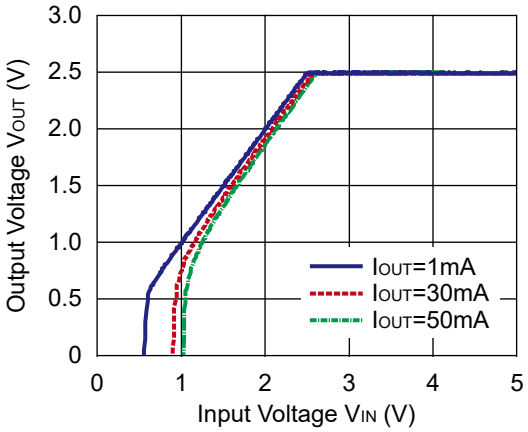

RP110x36xx

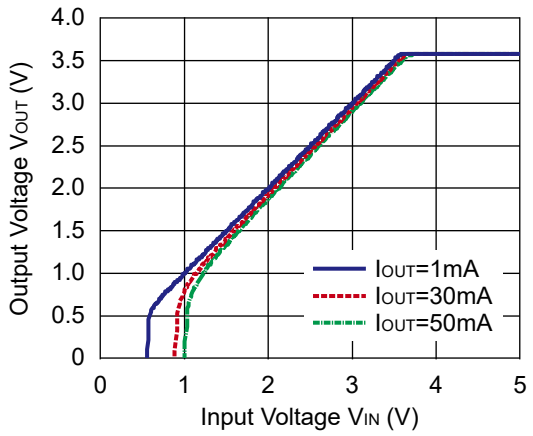

3) Supply Current vs. Input Voltage (C1=Ceramic 0.1µF, C2=Ceramic 0.1µF, Topt=25°C)

RP110x08xx

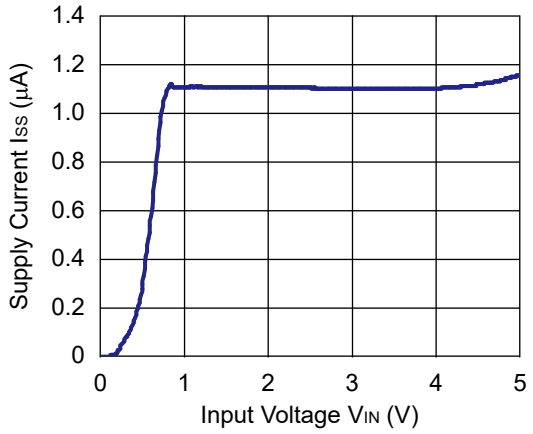

RP110x25xx

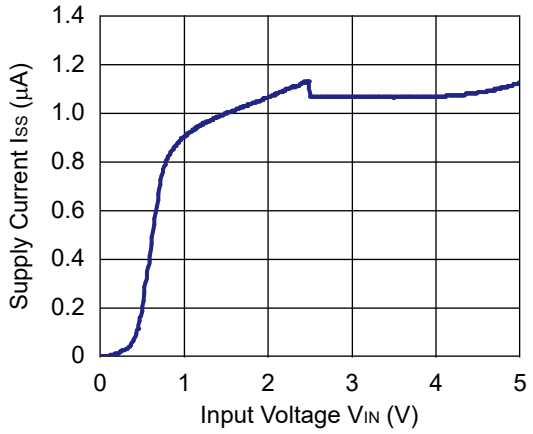

RP110x36xx

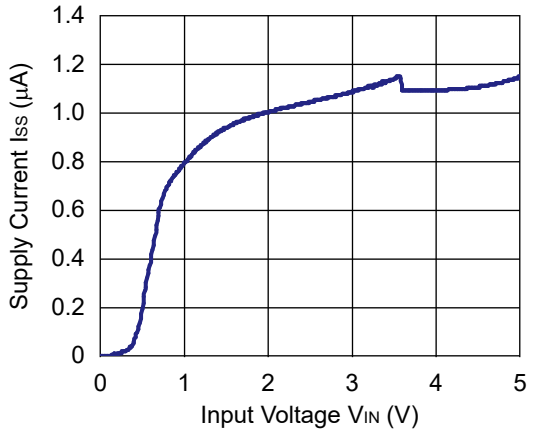

4) Output Voltage vs. Temperature (C1=Ceramic 0.1μF, C2=Ceramic 0.1μF, I_{OUT}=1mA)

RP110x08xx

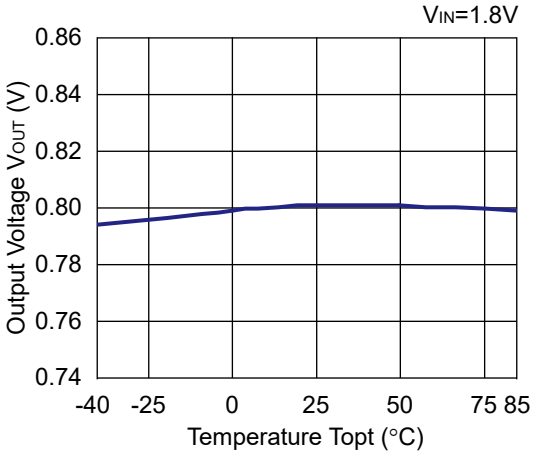

RP110x25xx

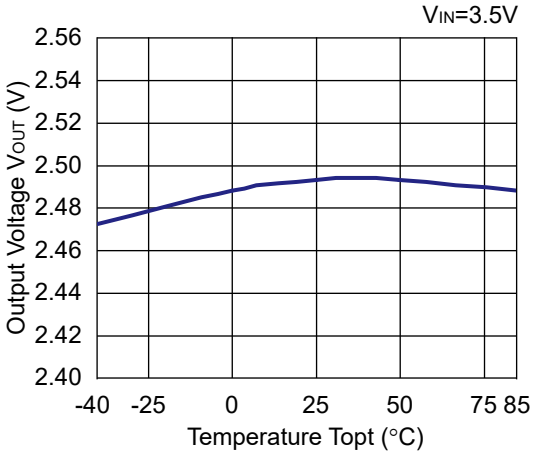

RP110x36xx

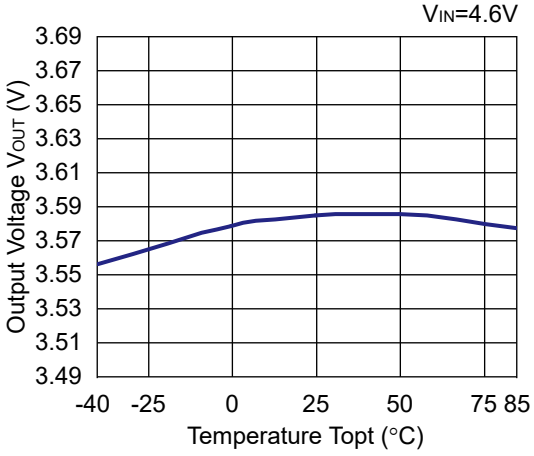

5) Supply Current vs. Temperature (C1=Ceramic 0.1μF, C2=Ceramic 0.1μF)

RP110x08xx

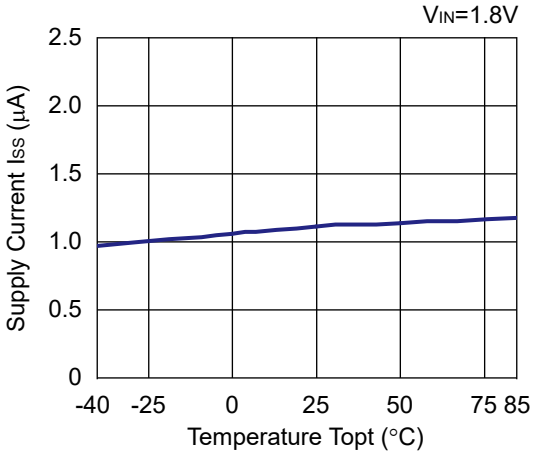

RP110x25xx

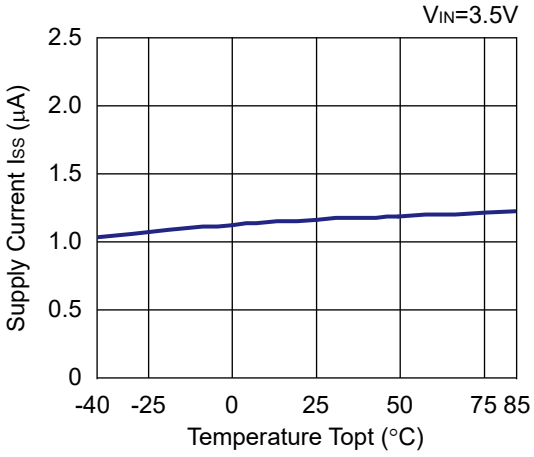

RP110x36xx

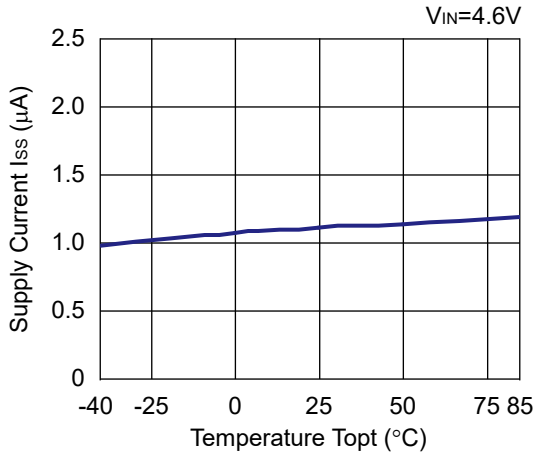

6) Dropout Voltage vs. Output Current (C1=Ceramic 0.1µF, C2=Ceramic 0.1µF, Topt=25°C)

RP110x08xx

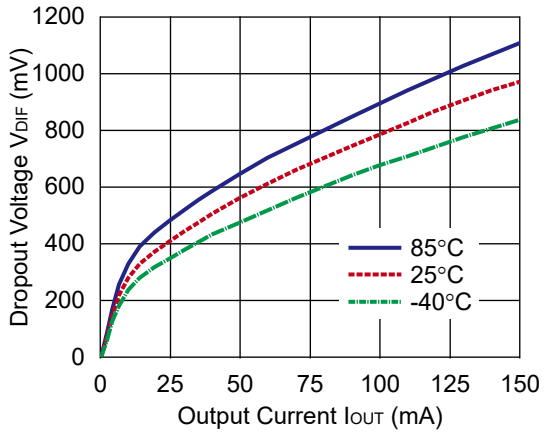

RP110x25xx

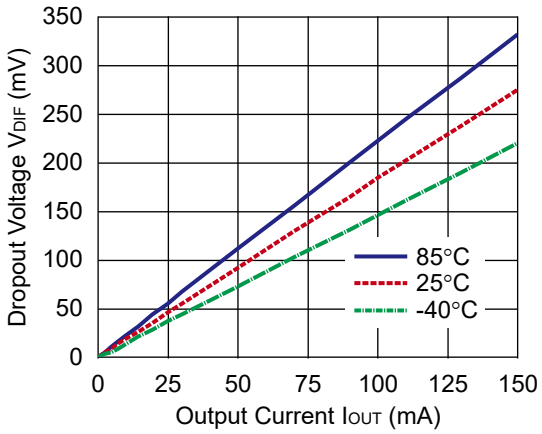

RP110x36xx

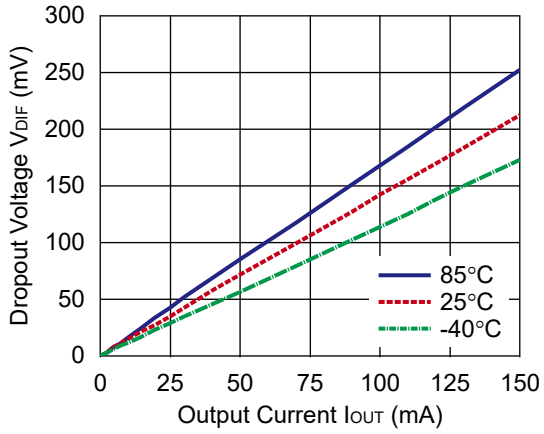

7) Dropout Voltage vs Set Output Voltage (C1=Ceramic 0.1μF, C2=Ceramic 0.1μF, Topt=25°C)

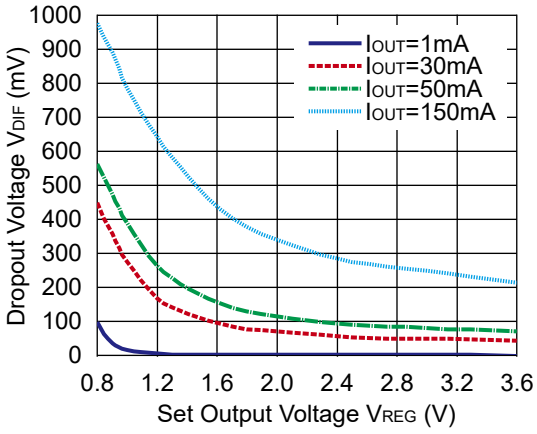

8) Ripple Rejection vs. Input Bias Voltage (C1=none, C2=Ceramic 0.1μF, Ripple=0.2Vp-p,Topt=25°C)

RP110x08xx

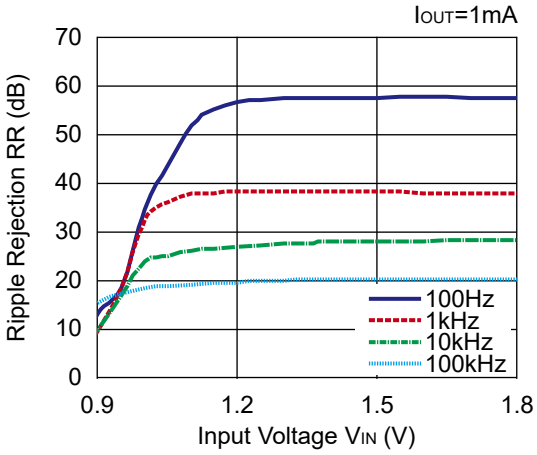

RP110x25xx

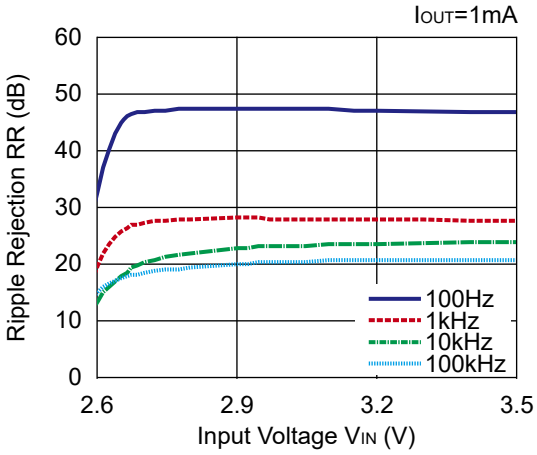

RP110x36xx

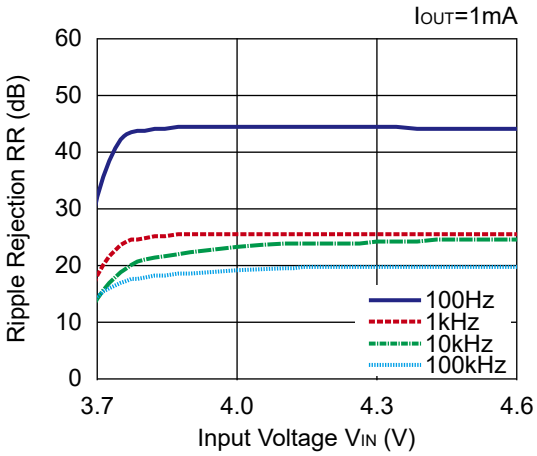

RP110x08xx

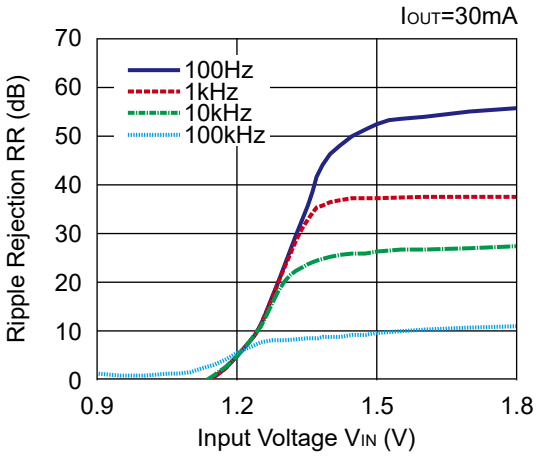

RP110x25xx

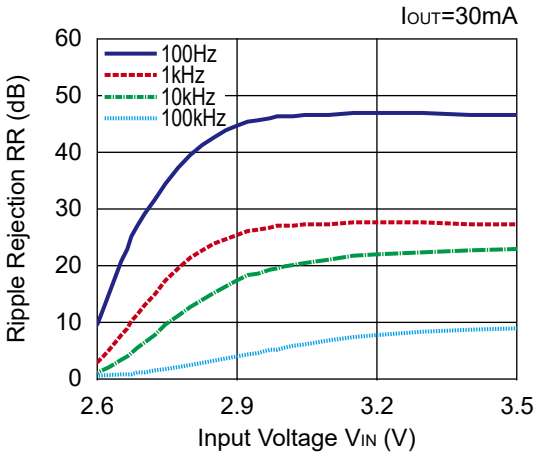

RP110x36xx

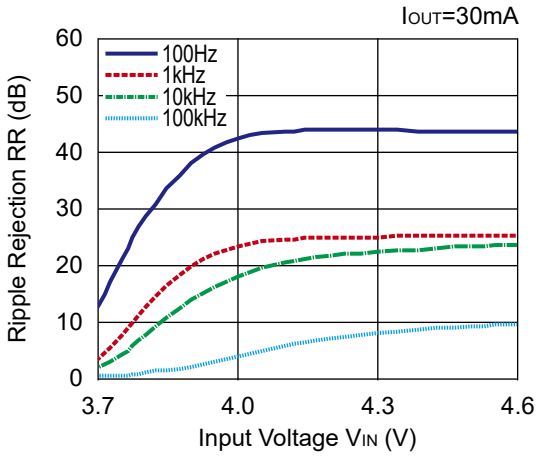

9) Ripple Rejection vs. Frequency (C1=none, C2=Ceramic 0.1µF, Ripple=0.2Vp-p, Topt=25°C)

RP110x08xx

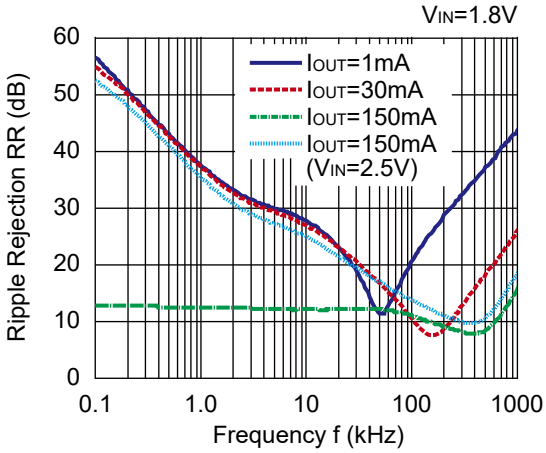

RP110x25xx

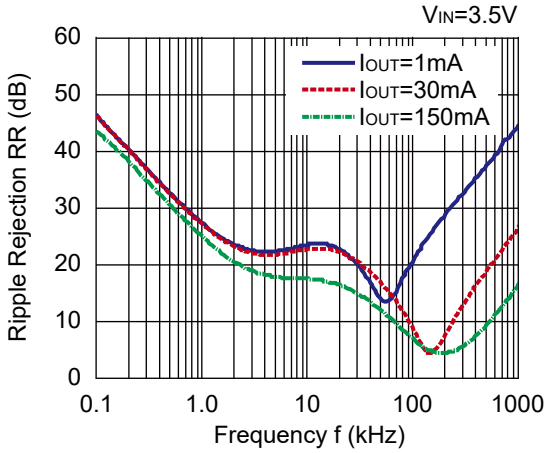

RP110x36xx

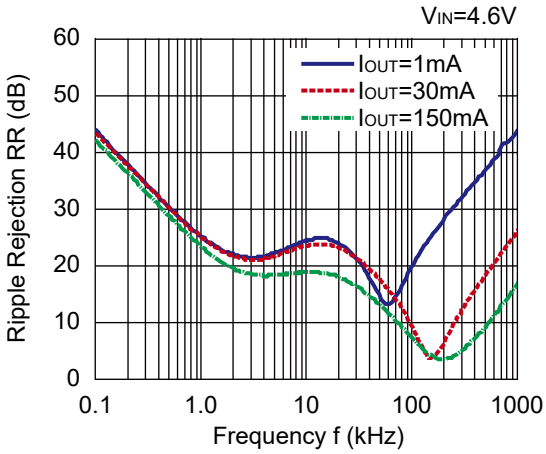

10) Input Transient Response (C1=none, C2=0.1µF, IOUT=30mA, tr=tf=5µs, Topt=25°C)

RP110x08xx

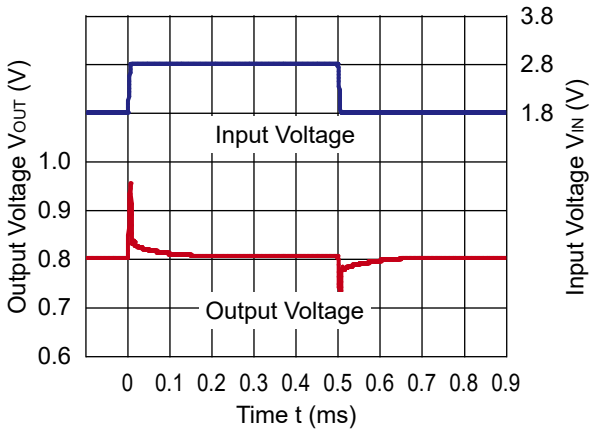

RP110x25xx

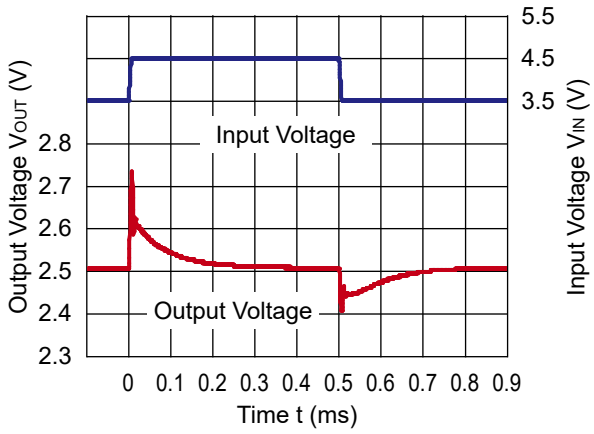

RP110x33xx

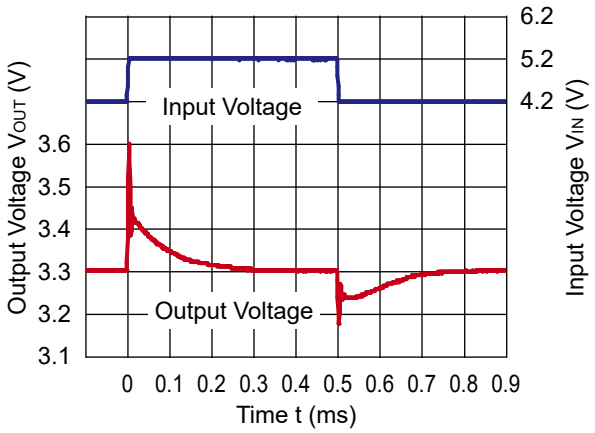

11) Load Transient Response (C1=none, tr=tf=5µs, Topt=25°C)

RP110x08xx

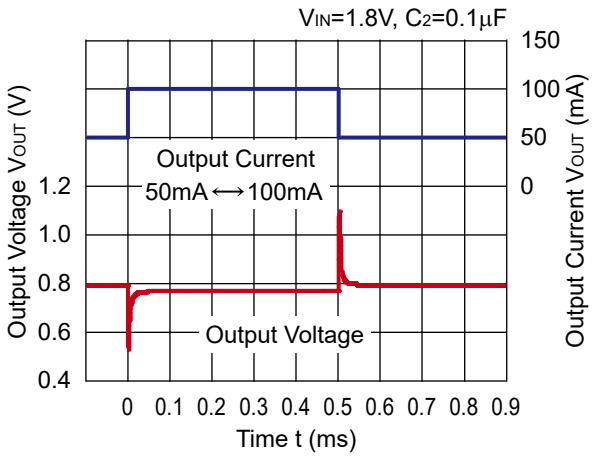

RP110x25xx

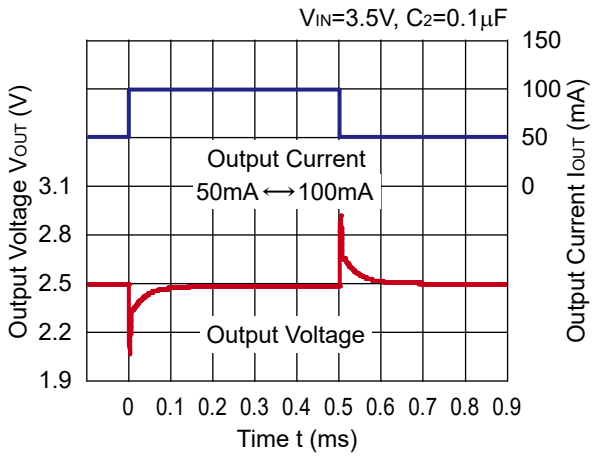

RP110x36xx

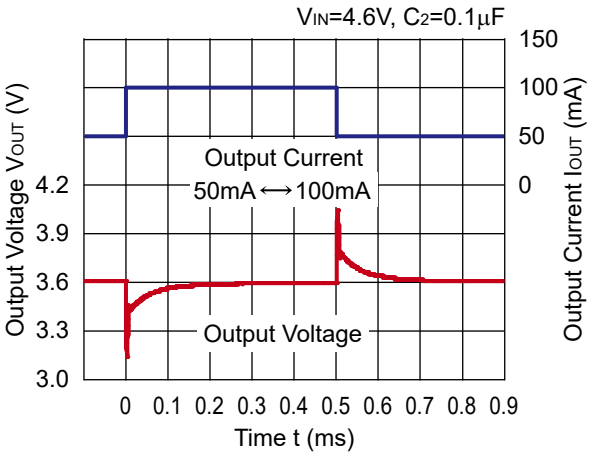

RP110x08xx

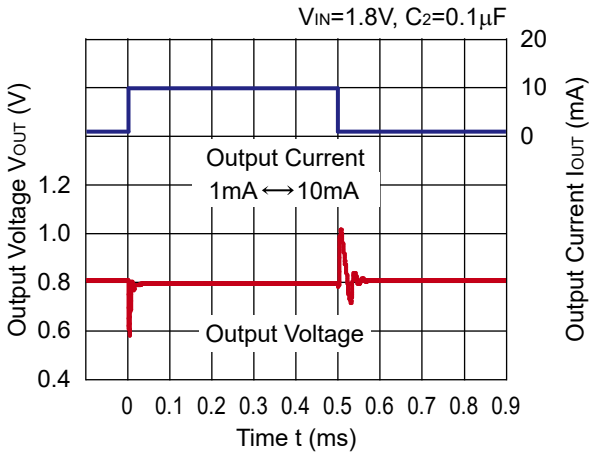

RP110x25xx

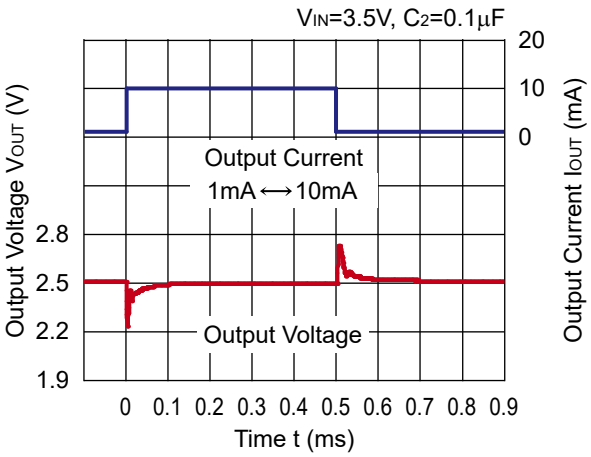

RP110x36xx

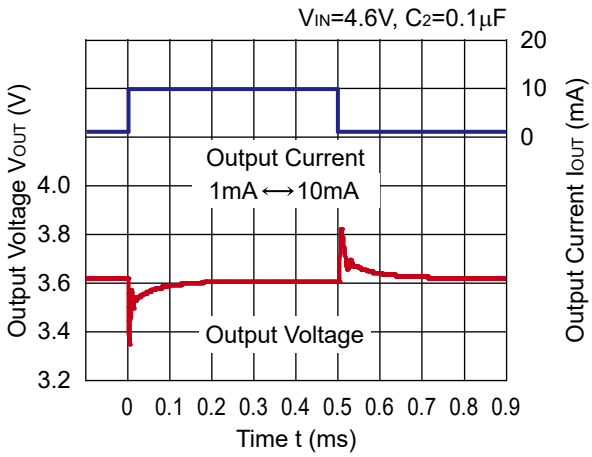

RP110x08xx

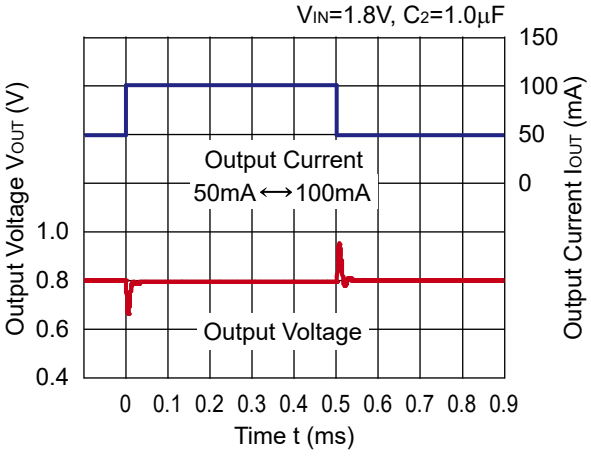

RP110x25xx

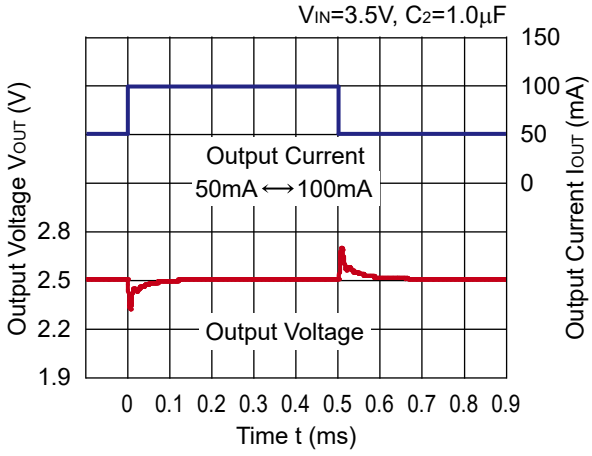

RP110x36xx

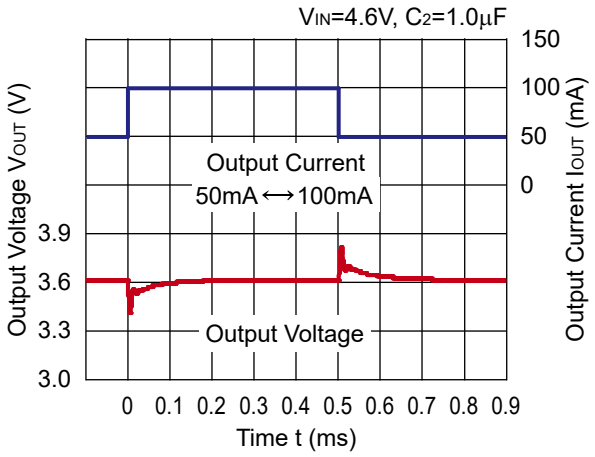

RP110x08xx

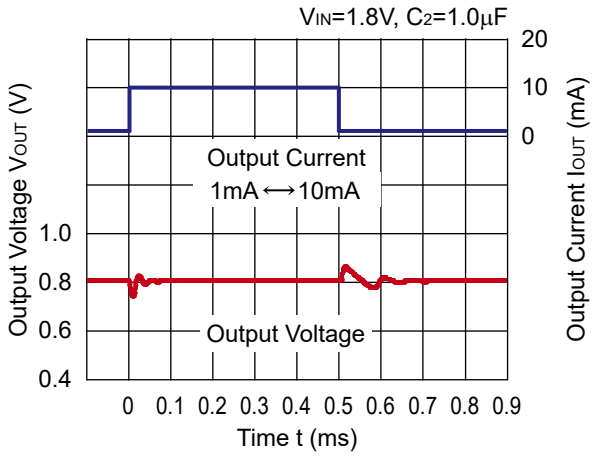

RP110x25xx

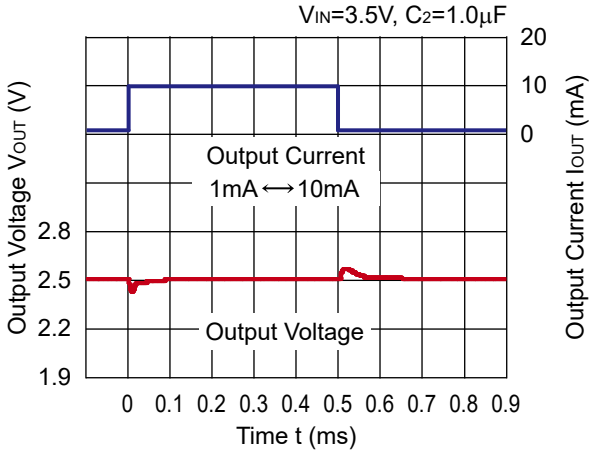

RP110x36xx

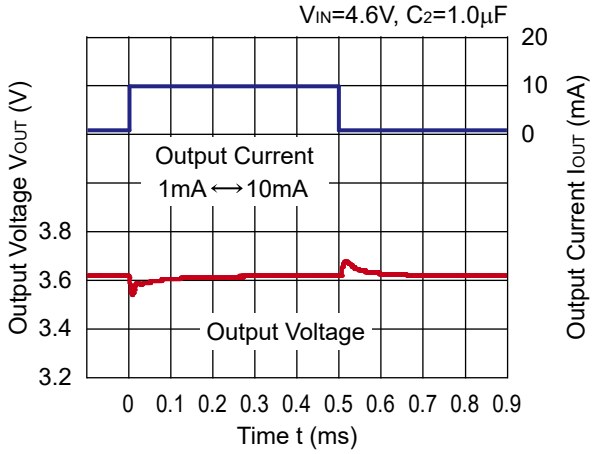

12) Turn On Speed (C1=Ceramic 0.1µF, C2=Ceramic 0.1µF, Topt=25°C)

RP110x08xC

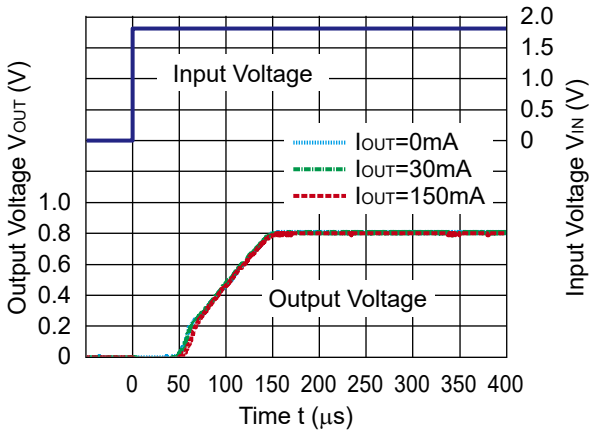

RP110x08xB/D

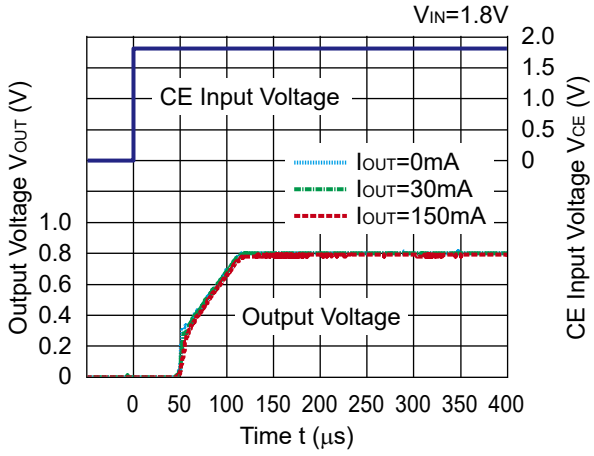

RP110x25xC

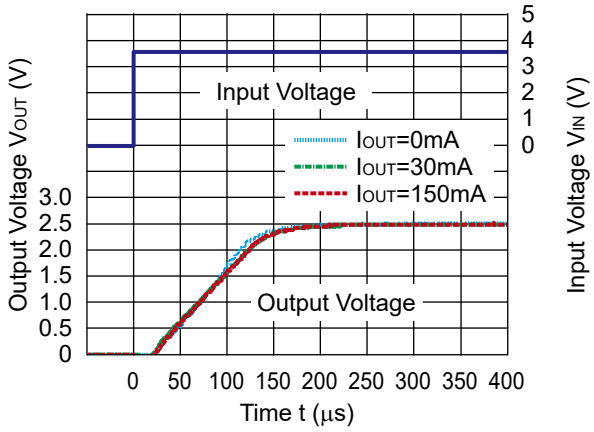

RP110x25xB/D

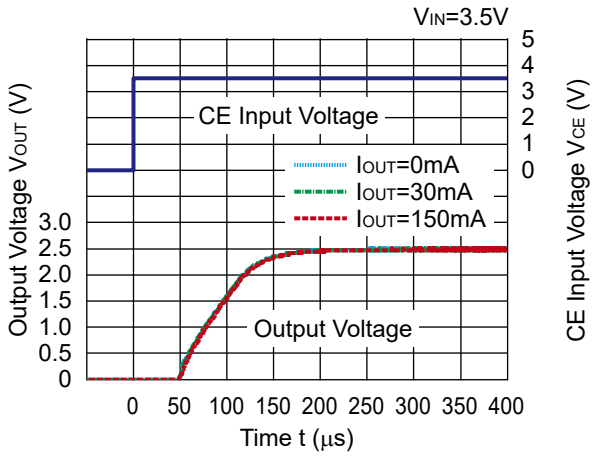

RP110x36xC

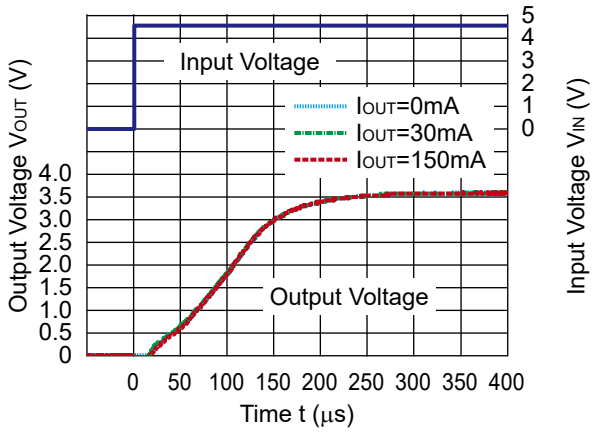

RP110x36xB/D

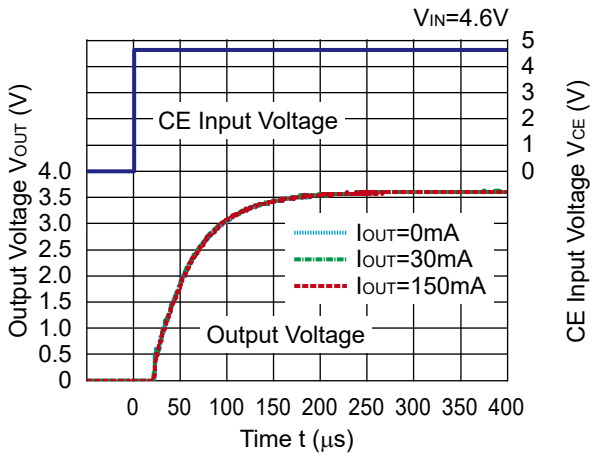

13) Turn Off Speed with CE pin (C1=Ceramic 0.1µF, C2=Ceramic 0.1µF, Topt=25°C)

RP110x08xB

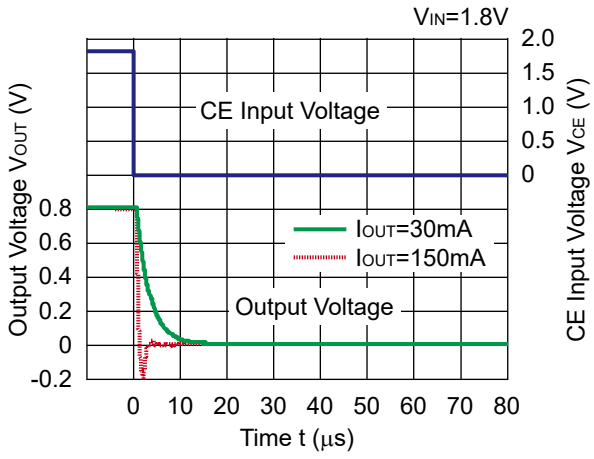

RP110x08xB

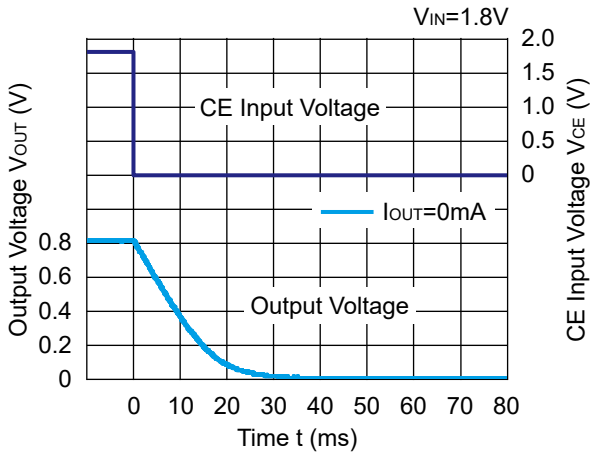

RP110x08xD

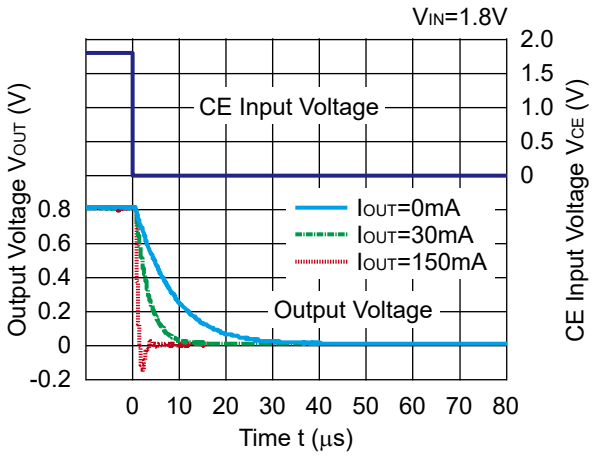

RP110x25xB

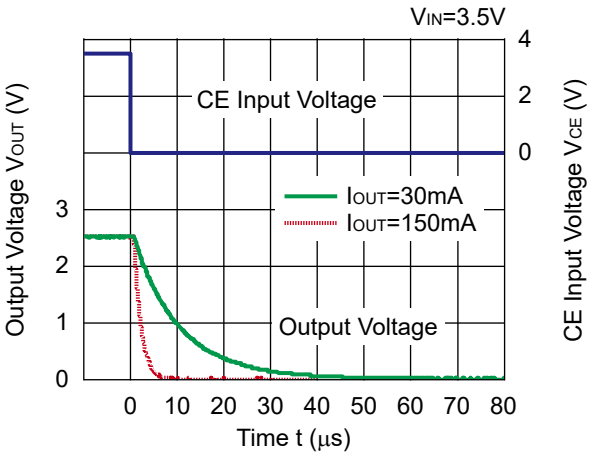

RP110x25xB

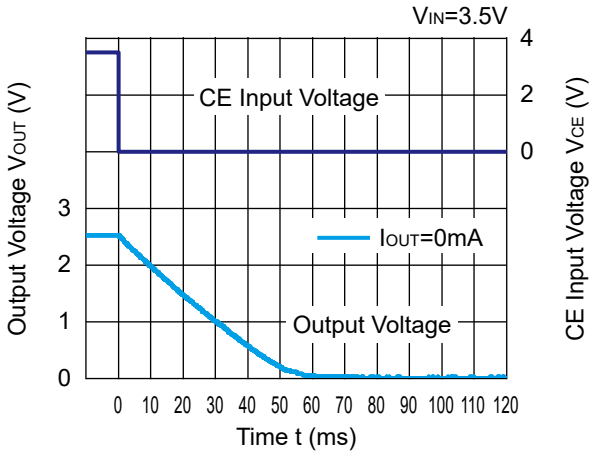

RP110x25xD

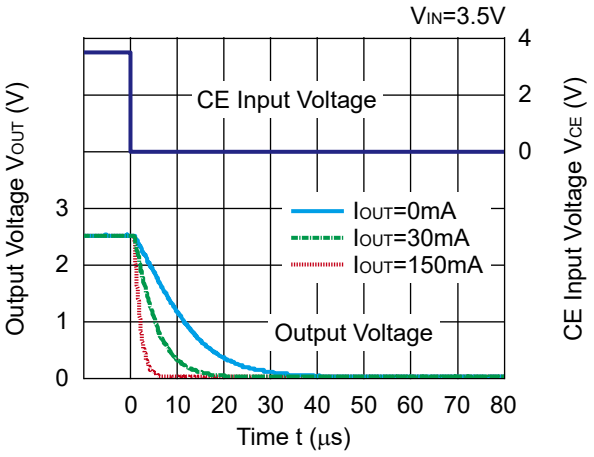

RP110x36xB

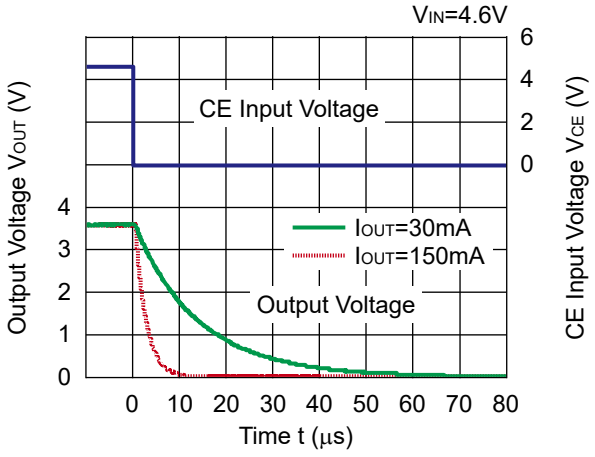

RP110x36xB

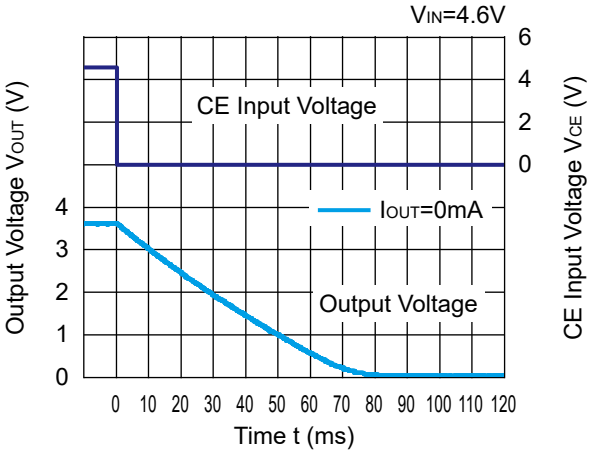

RP110x36xD

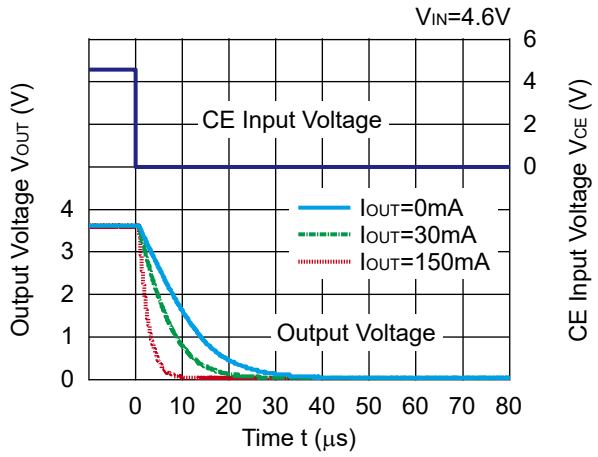

14) Inrush Current (C1=none, I_{OUT}=0mA, Topt=25°C)

RP110x08xC

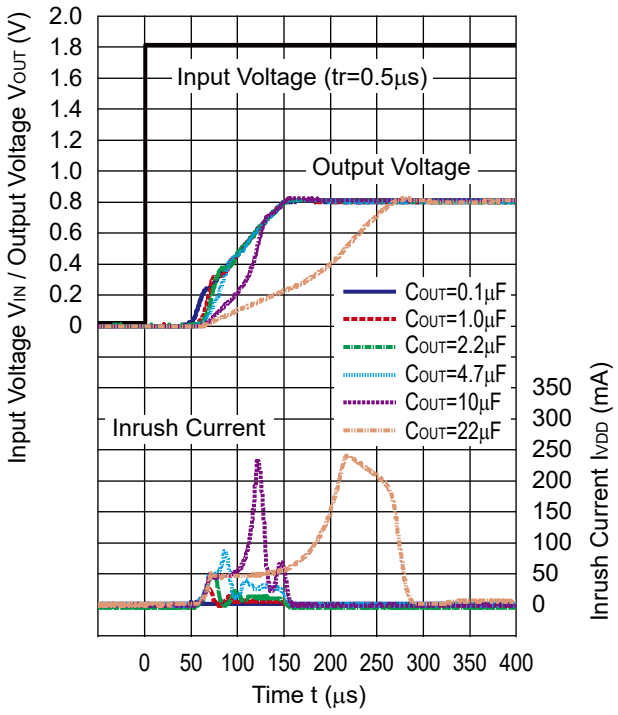

RP110x08xB/D

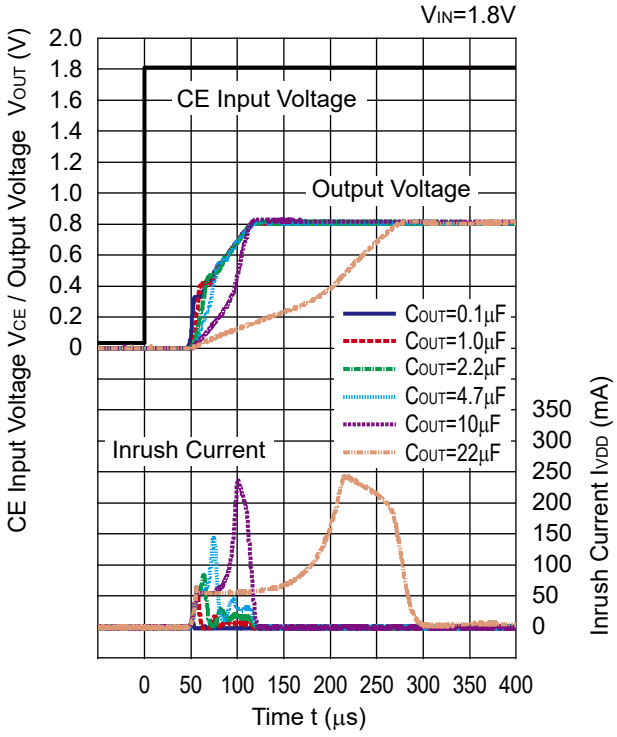

RP110x25xC

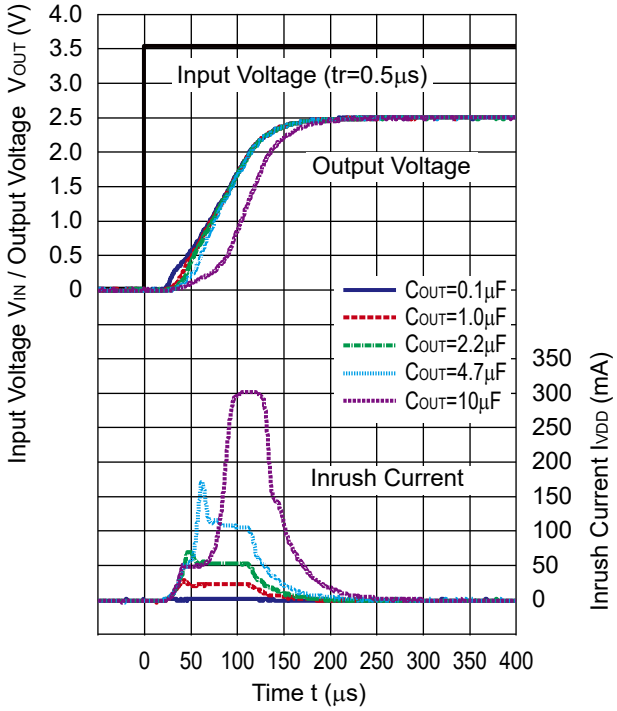

RP110x25xB/D

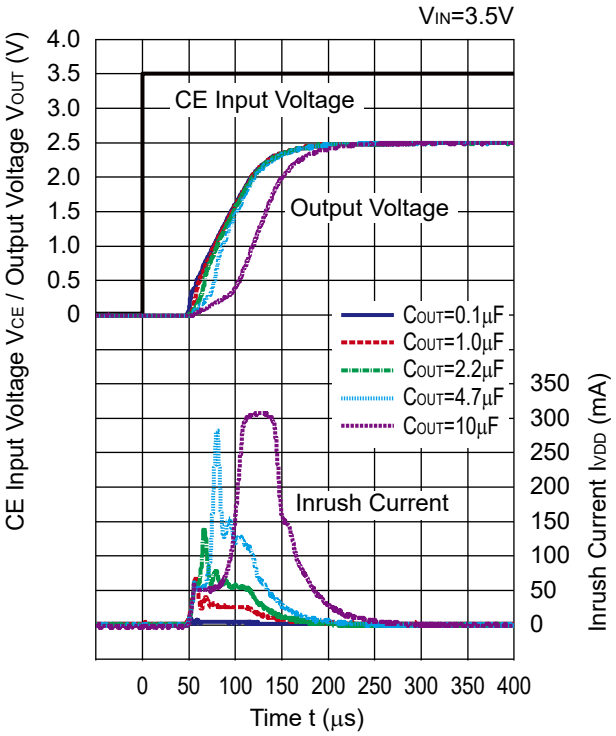

RP110x36xC

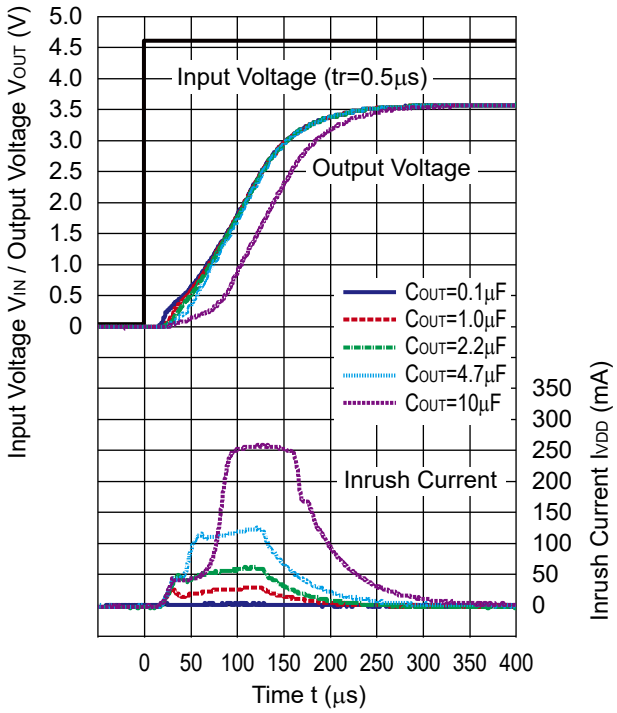

RP110x36xB/D

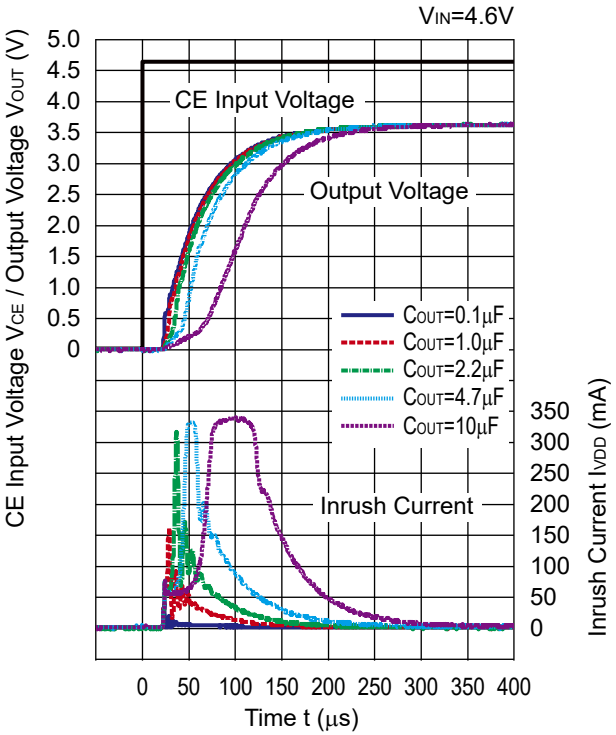

ESR vs. Output Current

When using these ICs, consider the following points:

The relations between I_{OUT} (Output Current) and ESR of an output capacitor are shown below.
The conditions when the white noise level is under 40μV (Avg.) are marked as the hatched area in the graph.

Measurement conditions

Frequency Band : 10Hz to 2MHz
Temperature : –40°C to 85°C
Hatched Area : Noise level is under 40μV(Avg.)
C_{IN},C_{OUT} : 0.1μF

RP110x08xx

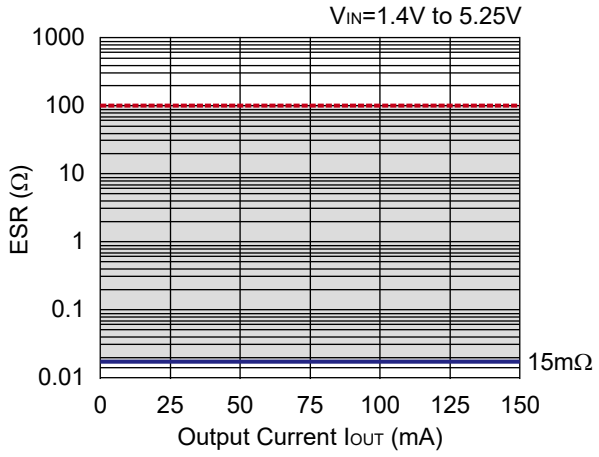

RP110x25xx

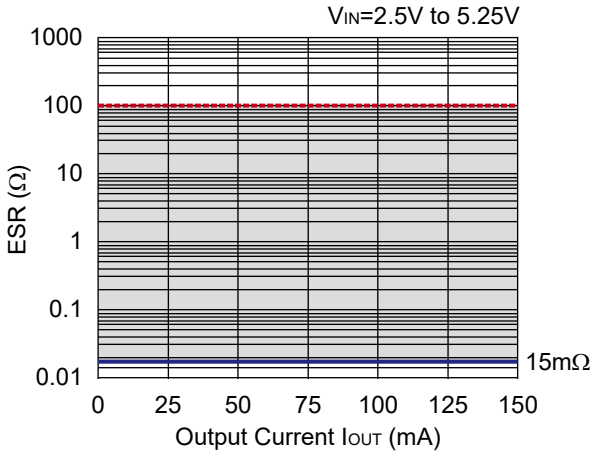

RP110x36xx

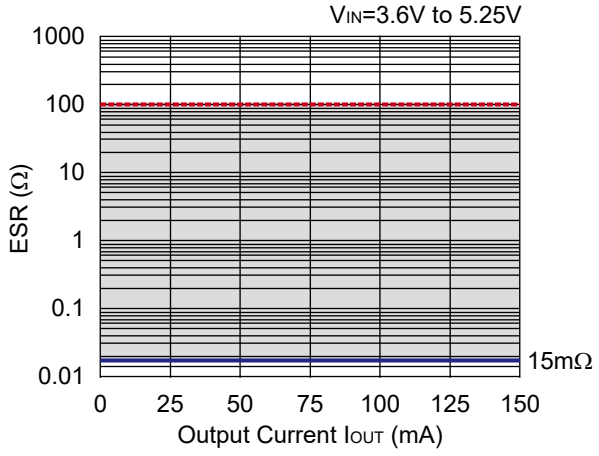

1. The products and the product specifications described in this document are subject to change or discontinuation of production without notice for reasons such as improvement. Therefore, before deciding to use the products, please refer to our sales representatives for the latest information thereon.
2. The materials in this document may not be copied or otherwise reproduced in whole or in part without the prior written consent of us.
3. This product and any technical information relating thereto are subject to complementary export controls (so-called KNOW controls) under the Foreign Exchange and Foreign Trade Law, and related politics ministerial ordinance of the law. (Note that the complementary export controls are inapplicable to any application-specific products, except rockets and pilotless aircraft, that are insusceptible to design or program changes.) Accordingly, when exporting or carrying abroad this product, follow the Foreign Exchange and Foreign Trade Control Law and its related regulations with respect to the complementary export controls.
4. The technical information described in this document shows typical characteristics and example application circuits for the products. The release of such information is not to be construed as a warranty of or a grant of license under our or any third party's intellectual property rights or any other rights.
5. The products listed in this document are intended and designed for use as general electronic components in standard applications (office equipment, telecommunication equipment, measuring instruments, consumer electronic products, amusement equipment etc.). Those customers intending to use a product in an application requiring extreme quality and reliability, for example, in a highly specific application where the failure or misoperation of the product could result in human injury or death should first contact us.
    - Aerospace Equipment
    - Equipment Used in the Deep Sea
    - Power Generator Control Equipment (nuclear, steam, hydraulic, etc.)
    - Life Maintenance Medical Equipment
    - Fire Alarms / Intruder Detectors
    - Vehicle Control Equipment (automotive, airplane, railroad, ship, etc.)
    - Various Safety Devices
    - Traffic control system
    - Combustion equipment

    In case your company desires to use this product for any applications other than general electronic equipment mentioned above, make sure to contact our company in advance. Note that the important requirements mentioned in this section are not applicable to cases where operation requirements such as application conditions are confirmed by our company in writing after consultation with your company.
6. We are making our continuous effort to improve the quality and reliability of our products, but semiconductor products are likely to fail with certain probability. In order to prevent any injury to persons or damages to property resulting from such failure, customers should be careful enough to incorporate safety measures in their design, such as redundancy feature, fire containment feature and fail-safe feature. We do not assume any liability or responsibility for any loss or damage arising from misuse or inappropriate use of the products.
7. The products have been designed and tested to function within controlled environmental conditions. Do not use products under conditions that deviate from methods or applications specified in this datasheet. Failure to employ the products in the proper applications can lead to deterioration, destruction or failure of the products. We shall not be responsible for any bodily injury, fires or accident, property damage or any consequential damages resulting from misuse or misapplication of the products.
8. Quality Warranty
    8-1. Quality Warranty Period
    In the case of a product purchased through an authorized distributor or directly from us, the warranty period for this product shall be one (1) year after delivery to your company. For defective products that occurred during this period, we will take the quality warranty measures described in section 8-2. However, if there is an agreement on the warranty period in the basic transaction agreement, quality assurance agreement, delivery specifications, etc., it shall be followed.
    8-2. Quality Warranty Remedies
    When it has been proved defective due to manufacturing factors as a result of defect analysis by us, we will either deliver a substitute for the defective product or refund the purchase price of the defective product.
    Note that such delivery or refund is sole and exclusive remedies to your company for the defective product.
    8-3. Remedies after Quality Warranty Period
    With respect to any defect of this product found after the quality warranty period, the defect will be analyzed by us. On the basis of the defect analysis results, the scope and amounts of damage shall be determined by mutual agreement of both parties. Then we will deal with upper limit in Section 8-2. This provision is not intended to limit any legal rights of your company.
9. Anti-radiation design is not implemented in the products described in this document.
10. The X-ray exposure can influence functions and characteristics of the products. Confirm the product functions and characteristics in the evaluation stage.
11. WLCSP products should be used in light shielded environments. The light exposure can influence functions and characteristics of the products under operation or storage.
12. Warning for handling Gallium and Arsenic (GaAs) products (Applying to GaAs MMIC, Photo Reflector). These products use Gallium (Ga) and Arsenic (As) which are specified as poisonous chemicals by law. For the prevention of a hazard, do not burn, destroy, or process chemically to make them as gas or power. When the product is disposed of, please follow the related regulation and do not mix this with general industrial waste or household waste.
13. Please contact our sales representatives should you have any questions or comments concerning the products or the technical information.

NISSHINBO

Nisshinbo Micro Devices Inc.

Official website
https://www.nisshinbo-microdevices.co.jp/en/

Purchase information
https://www.nisshinbo-microdevices.co.jp/en/buy/

ENTEGRECİ

Bu belge www.entegreci.com üzerinden sunulmaktadır.

Elektronik komponent tedarikinde Entegreci

Entegreci, Eskişehir merkezli, Türkiye geneline satış yapan bir elektronik komponent mağazasıdır. Entegreler (IC), mikrodenetleyiciler, transistörler, diyotlar, pasif elemanlar, konnektörler, modüller ve geliştirme kartları tek adetten seri üretim adetlerine kadar satılır. Ürün sayfalarında güncel stok durumunu, fiyatı ve datasheet bağlantısını bulabilirsiniz.

Parça koduyla arama

Üretici parça numarasını yazın; stok ve fiyatı hemen görün.

www.entegreci.com

Ürün kategorileri

Entegreden kapasitöre tüm elektronik komponent kategorileri.

Kategorilere göz atın

Üreticiler

Aradığınız üreticinin ürünlerini tek sayfada inceleyin.

Üreticileri görün

Toplu alım ve teklif

Listede olmayan ya da yüksek adetli parçalar için teklif isteyin.

Teklif isteyin

www.entegreci.com | **destek@entegreci.com** | **0850 305 90 34**

Entegreci is an online electronic components store based in Türkiye. Search by manufacturer part number to see stock, prices and datasheets for integrated circuits, microcontrollers, transistors, passive components and connectors, or request a quote for parts that are not listed.

Bu sayfa Entegreci tarafından eklenmiştir. Belgenin önceki sayfaları asıl yayıncısına aittir ve içeriği değiştirilmemiştir; en güncel sürüm için belgenin yayıncısına başvurun.