Good Transient Response Low Voltage 500 mA LDO for Automotive Applications

NO.EC-241-260310

OUTLINE

The RP111x is a CMOS-based LDO regulator featuring 500 mA output current. The input voltage is as low as 1.4 V and the output voltage can be set from 0.7 V. Due to a built-in 0.46 Ω (at V_{OUT} = 2.8 V) on-resistor, RP111x can provide a low dropout voltage. RP111x also features an excellent line transient response, ripple rejection at 75 dB, and low noise. The output voltage accuracy is as high as ±0.8% and the temperature drift coefficient of output voltage is low at ±30 ppm/°C. The accuracy of the output voltage of RP111x includes the temperature characteristics and the load transient response has been improved. The typ. and max value of under/overshoot for various output current are shown in the typical characteristics, therefore the accuracy of the output voltage estimation will be easy on the actual operating cases. In addition to a fold-back protection circuit built into conventional regulators, RP111x contains a thermal shutdown circuit and an inrush current limit circuit.

SOT-23-5, SOT-89-5, and HSOP-6J packages are available.

FEATURES

- Input Voltage Range (Maximum Rating) ····· 1.4 V to 5.25 V (6.0 V)
- Operating Temperature ····· −40°C to 105°C
- Supply Current ····· Typ. 80 μA
- Standby Current ····· Typ. 0.1 μA
- Dropout Voltage ····· Typ. 0.23 V (I_{OUT} = 500 mA、V_{SET} = 2.5 V)
- Ripple Rejection ····· Typ. 75 dB (f = 1 kHz)
  Typ. 70 dB (f = 10 kHz)
- Output Voltage Accuracy ····· ±0.8% (V_{SET} ≥ 1.8 V)
- Output Voltage Temperature Coefficient ····· Typ. ±30 ppm/°C (V_{SET} ≥ 1.8 V)
- Feedback Voltage Accuracy ····· 0.7±18 mV
- Feedback Voltage Temperature Coefficient ···· Typ. ±100 ppm/°C
- Line Regulation ····· Typ. 0.02%/V
- Input Transient Response ····· Typ. ±1.5 mV (V_{IN}: V_{SET} + 0.5 V⇔V_{SET} + 1.5 V (tr = tf = 5.0 μs), V_{IN} ≥ 1.4 V, I_{OUT} = 30 mA)
- Packages ····· SOT-23-5, SOT-89-5, HSOP-6J
- Output Voltage Range ····· 0.7 V, 1.1 V, 1.2 V, 1.5 V, 1.8 V, 2.5 V, 2.8 V, 2.85 V, 2.9 V, 3.0 V, 3.3 V, 3.4 V
  Contact our sales representatives for other voltages.
  RP111x001B/D: 0.7 V to 3.6 V (Adjustable with external resistor)
- Built-in Fold-back Protection Circuit ····· Typ. 50 mA
- Thermal Shutdown Temperature ····· 165°C
- Inrush Current Limit ····· Typ. 400 mA (for 180 μs after start-up)
- Ceramic capacitors are recommended to be used with this IC
  ····· 1.0 μF or more (Internally Fixed Output Voltage)
- Output Noise ····· 20 x V_{SET} μVrms (BW = 10 Hz to 100 kHz, V_{SET} ≥ 1.8 V)

APPLICATIONS

- Power source for accessories such as car audios, car navigation systems, and ETC systems
- Power source for ECUs such as EV inverter and battery charge control unit

BLOCK DIAGRAMS

Internally Fixed Output Voltage (HSOP-6J)

RP111Sxx1B

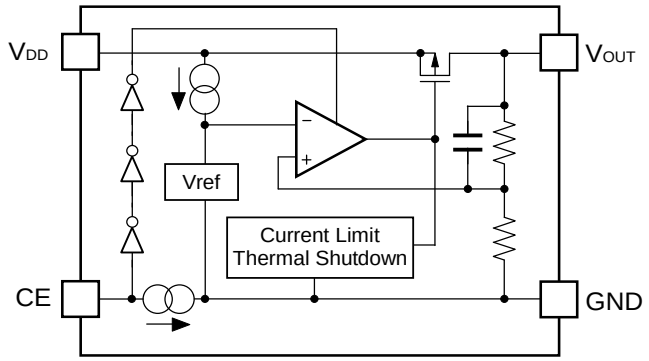

RP111Sxx1D

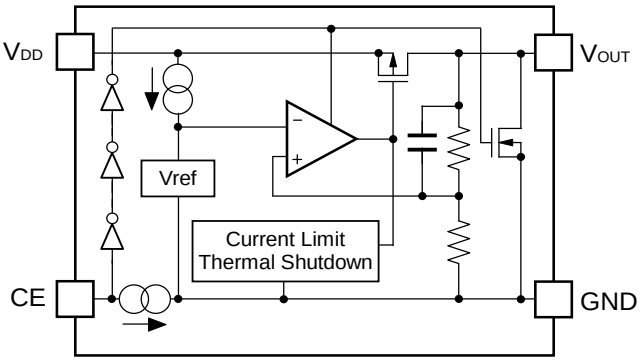

Internally Fixed Output Voltage (SOT-23-5/ SOT-89-5)

RP111Nxx1B / RP111Hxx1B

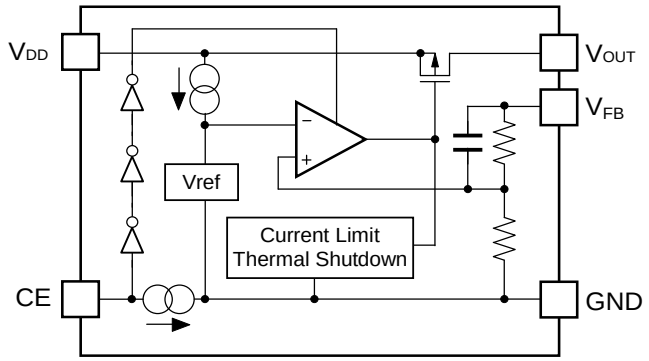

RP111Nxx1D / RP111Hxx1D

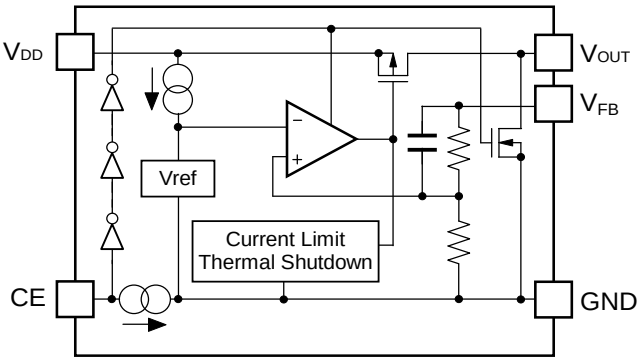

Externally Adjustable Output Voltage (HSOP-6J/ SOT-23-5/ SOT-89-5)

RP111S001B / RP111N001B / RP111H001B

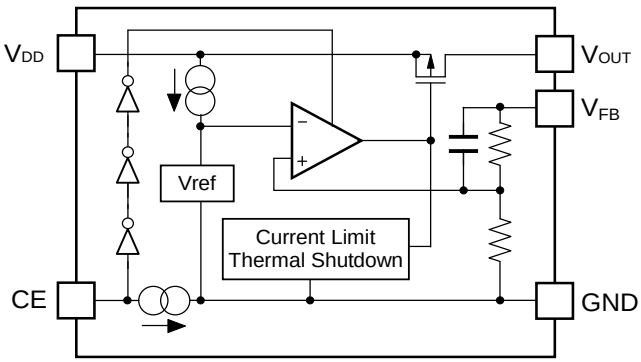

RP111S001D / RP111N001D / RP111H001D

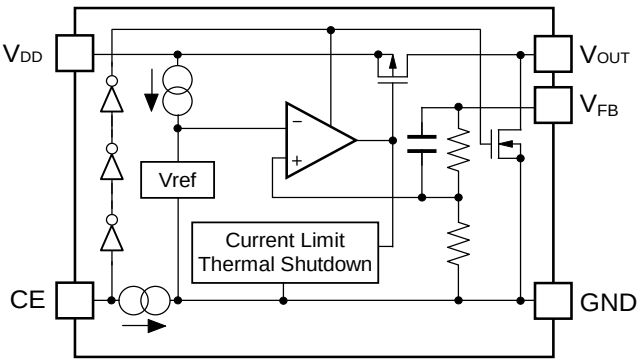

SELECTION GUIDE

The set output voltage, auto-discharge function[*1], and package type for the IC are user-selectable.

Product Name	Package	Quantity per Reel	Pb Free	Halogen Free
RP111Nxx1∗-TR-#E	SOT-23-5	3,000 pcs	Yes	Yes
RP111N001∗-TR-#E				
RP111Hxx1∗-T1-#E	SOT-89-5	1,000 pcs	Yes	Yes
RP111H001∗-T1-#E				
RP111Sxx1∗-E2-#E	HSOP-6J	1,000 pcs	Yes	Yes
RP111S001∗-E2-#E				

RP111x001B/D: Adjustable with external resistor

xx: Specify the set output voltage (V_{SET})
0.7 V (07), 1.1 V (11), 1.2 V (12), 1.5 V (15), 1.8 V (18), 2.5 V (25), 2.8 V (28), 2.9 V (29), 3.0 V (30), 3.3 V (33), 3.4 V (34)

2.85 V: RP111x281∗5

Contact our sales representatives for other voltages.

∗: Specify the auto-discharge function at off state
(B) Active-high, without auto discharge function at off state
(D) Active-high, with auto discharge function at off state

#: Specify Automotive Class Code

	Operating Temperature Range	Guaranteed Specs Temperature Range	Screening
A	−40°C to 105°C	25°C	High Temperature
J	−40°C to 105°C	−40°C to 105°C	High and Low Temperature

[*1] Auto-discharge function quickly lowers the output voltage to 0 V by releasing the electrical charge in the external capacitor when the chip enable signal is switched from the active mode to the standby mode.

PIN DESCRIPTIONS

SOT-23-5 **SOT-89-5** **HSOP-6J**

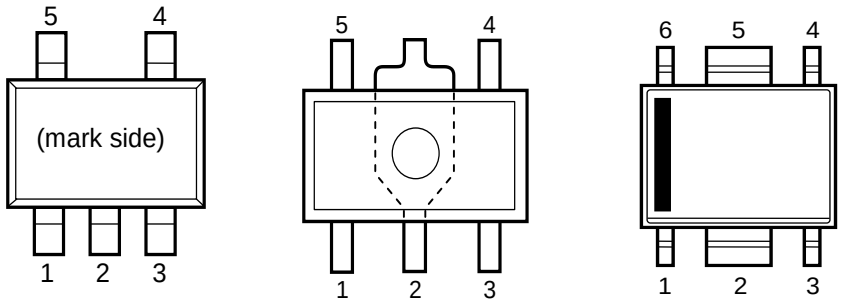

SOT-23-5

Pin No.	Symbol	Description
1	V_{DD}	Input Pin
2	GND	Ground Pin
3	CE	Chip Enable Pin (Active-high)
4	V_{FB}	Feed Back Pin
5	V_{OUT}	Output Pin

The V_{OUT} pin should be connected to the V_{FB} pin when using RP111x as an internal fixed output voltage type. In case of using this device as an external adjustable type, refer to *Adjustable Output Voltage Type Setting* for detailed information.

SOT-89-5

Pin No.	Symbol	Description
1	V_{FB}	Feed Back Pin
2	GND	Ground Pin
3	CE	Chip Enable Pin (Active-high)
4	V_{DD}	Input Pin
5	V_{OUT}	Output Pin

The V_{OUT} pin should be connected to the V_{FB} pin when using RP111x as an internal fixed output voltage type. In case of using this device as an external adjustable type, refer to *Adjustable Output Voltage Type Setting* for detailed information.

HSOP-6J

Pin No.	Symbol	Description
1	V_{OUT}	Output Pin
2	GND	Ground Pin
3	GND	Ground Pin (Internal fixed output voltage type: RP111Sxx1B/D)
	V_{FB}	Feed Back Pin (Adjustable output voltage type: RP111S001B/D)
4	CE	Chip Enable Pin
5	GND	Ground Pin
6	V_{DD}	Input Pin

In case of using this device as an external adjustable type, refer to *Adjustable Output Voltage Type Setting* for detailed information.

ABSOLUTE MAXIMUM RATINGS

Symbol	Item		Rating	Unit
V_{IN}	Input Voltage		−0.3 to 6.0	V
V_{CE}	Input Voltage (CE Pin)		−0.3 to 6.0	V
V_{OUT}	Output Voltage		−0.3 to V_{IN} + 0.3	V
I_{OUT}	Output Current		510	mA
P_D	Power Dissipation[*1] (JEDEC STD. 51)	SOT-23-5	830	mW
		SOT-89-5	3200	
		HSOP-6J	3400	
Tj	Junction Temperature		−40 to 150	°C
Tstg	Storage Temperature		−55 to 150	°C

[*1] Refer to *PACKAGE INFORMATION* for detailed information.

ABSOLUTE MAXIMUM RATINGS

Electronic and mechanical stress momentarily exceeded absolute maximum ratings may cause permanent damage and may degrade the lifetime and safety for both device and system using the device in the field. The functional operation at or over these absolute maximum ratings are not assured.

RECOMMENDED OPERATING CONDITIONS

Symbol	Item	Rating	Unit
V_{IN}	Input Voltage [*2]	1.4 to 5.25	V
Ta	Operating Temperature	−40 to 105	°C

[*2] In case of exceeding the maximum Input Voltage of 5.25 V, the device must be operated on condition that the Input Voltage is up to 5.5 V and the total operating time is within 500 hrs.

RECOMMENDED OPERATING CONDITIONS

All of electronic equipment should be designed that the mounted semiconductor devices operate within the recommended operating conditions. The semiconductor devices cannot operate normally over the recommended operating conditions, even if they are used over such conditions by momentary electronic noise or surge. And the semiconductor devices may receive serious damage when they continue to operate over the recommended operating conditions.

ELECTRICAL CHARACTERISTICS

V_{IN} = V_{SET} + 1.0 V (V_{SET} 〉 1.5 V), V_{IN} = 2.5 V (V_{SET} ≤ 1.5 V), I_{OUT} = 1 mA,
C_{IN} = C_{OUT} = 1.0 μF, unless otherwise noted.
The specifications surrounded by ▭ are guaranteed by design engineering at −40°C ≤ Ta ≤ 105°C.

RP111xxx1D/B (-AE) (Fixed Output Voltage Type) (Ta = 25°C)

Symbol	Item	Conditions		Min.	Typ.	Max.	Unit
V_{OUT}	Output voltage	Ta = 25°C	V_{SET} ≥ 1.8 V	x 0.992		x 1.008	V
			V_{SET} 〈 1.8 V	−18		18	mV
		−40°C ≤ Ta ≤ 105°C	V_{SET} ≥ 1.8 V	x 0.985		x 1.015	V
			V_{SET} 〈 1.8 V	−55		50	mV
I_{OUT}	Output Current			500			mA
$\Delta V_{OUT}/\Delta I_{OUT}$	Load regulation	1 mA ≤ I_{OUT} ≤ 500 mA			1	20	mV
V_{TRLD}	Load Transient Response	I_{OUT}: 1 mA⇔250 mA (tr = tf = 0.5 μs)	C_{OUT} = 1 μF		−75 +45		mV
			C_{OUT} = 2.2 μF		−55 +35		
		I_{OUT}: 1 mA⇔250 mA (tr = tf = 5 μs)	C_{OUT} = 1 μF		−20 +15		
V_{DIF}	Dropout Voltage	Refer to the *Dropout Voltage*					
I_{SS}	Supply Current	I_{OUT} = 0 mA			80	125	μA
Istandby	Standby Current	V_{CE} = 0 V			0.1	7.0	μA
$\Delta V_{OUT}/\Delta V_{IN}$	Line regulation	V_{SET} + 0.5 V ≤ V_{IN} ≤ 5.25 V, V_{IN} ≥ 1.4 V			0.02	0.10	%/V
I_{SC}	Short Current Limit	V_{OUT} = 0 V			50		mA
I_{PD}	CE Pull-down Current				0.3	0.6	μA
V_{CEH}	CE Input Voltage "H"			1.0			V
V_{CEL}	CE Input Voltage "L"					0.4	V
T_{TSD}	Thermal Shutdown Detection Temperature	Junction Temperature			165		°C
T_{TSR}	Thermal Shutdown Released Temperature	Junction Temperature			100		°C
R_{LOW}	LOW output Nch Tr. ON Resistance (RP111xxxD only)	V_{IN} = 4.0 V, V_{CE} = 0 V			60		Ω

All test items listed under Electrical Characteristics are done under the pulse load condition (Tj ≈ Ta = 25°C) except for Load Transient Response.

The specifications surrounded by ▭ are guaranteed by design engineering at –40°C ≤ Ta ≤ 105°C.

RP111xxx1D/B (-AE) (Fixed Output Voltage Type) Dropout Voltage (Ta = 25°C)

Output Voltage V_{OUT} (V)	Dropout Voltage V_{DIF} (V)		
	Condition	Typ.	Max.
0.7 ≤ V_{SET} < 0.8	I_{OUT} = 500 mA	0.58	0.88
0.8 ≤ V_{SET} < 0.9		0.52	0.80
0.9 ≤ V_{SET} < 1.0		0.45	0.70
1.0 ≤ V_{SET} < 1.2		0.42	0.64
1.2 ≤ V_{SET} < 1.4		0.35	0.53
1.4 ≤ V_{SET} < 1.8		0.31	0.48
1.8 ≤ V_{SET} < 2.1		0.27	0.44
2.1 ≤ V_{SET} < 2.5		0.25	0.38
2.5 ≤ V_{SET} < 3.0		0.23	0.34
3.0 ≤ V_{SET} ≤ 3.6		0.22	0.32

V_{IN} = 2.5 V, I_{OUT} = 1 mA, C_{IN} = C_{OUT} = 1.0 μF, unless otherwise noted.
The specifications surrounded by ▭ are guaranteed by design engineering at −40°C ≤ Ta ≤ 105°C.

RP111x001D/B (-AE) (Adjustable Output Voltage Type) (Ta = 25°C)

Symbol	Item	Conditions		Min.	Typ.	Max.	Unit
V_{FB}	Feedback pin output voltage	Ta = 25°C	V_{OUT} = V_{FB}	0.682	0.700	0.718	V
		−40°C ≤ Ta ≤ 105°C		0.645		0.750	
V_{OUT}	Adjustable Output Voltage Range			0.7		3.6	V
I_{OUT}	Output Current			500			mA
$\Delta V_{OUT}/\Delta I_{OUT}$	Load regulation	1 mA ≤ I_{OUT} ≤ 500 mA			1	20	mV
V_{TRLD}	Load Transient Response	I_{OUT}: 1 mA⇔250 mA (tr = tf = 0.5 μs)	C_{OUT} = 1 μF		−75 +45		mV
			C_{OUT} = 2.2 μF		−55 +35		
		I_{OUT}: 1 mA⇔250 mA (tr = tf = 5 μs)	C_{OUT} = 1 μF		−20 +15		
V_{DIF}	Dropout Voltage	V_{OUT} = V_{FB}	I_{OUT} = 500 mA			0.88	V
I_{SS}	Supply Current	I_{OUT} = 0 mA			80	125	μA
Istandby	Standby Current	V_{CE} = 0 V			0.1	7.0	μA
$\Delta V_{OUT}/\Delta V_{IN}$	Line regulation	V_{OUT} = V_{FB}, 1.4 V ≤ V_{IN} ≤ 5.25 V			0.02	0.10	%/V
I_{SC}	Short Current Limit	V_{OUT} = V_{FB} = 0 V			50		mA
I_{PD}	CE Pull-down Current				0.3	0.6	μA
V_{CEH}	CE Input Voltage "H"			1.0			V
V_{CEL}	CE Input Voltage "L"					0.4	V
T_{TSD}	Thermal Shutdown Detection Temperature	Junction Temperature			165		°C
T_{TSR}	Thermal Shutdown Released Temperature	Junction Temperature			100		°C

All test items listed under Electrical Characteristics are done under the pulse load condition (Tj ≈ Ta = 25°C) except for Load Transient Response.

V_{IN} = V_{SET} + 1.0 V (V_{SET} 〉 1.5 V), V_{IN} = 2.5 V (V_{SET} ≤ 1.5 V), I_{OUT} = 1 mA,
C_{IN} = C_{OUT} = 1.0 μF, unless otherwise noted.

RP111xxx1D/B (-JE) (Fixed Output Voltage Type) (−40°C ≤ Ta ≤ 105°C)

Symbol	Item	Conditions		Min.	Typ.	Max.	Unit
V_{OUT}	Output voltage	Ta = 25°C	V_{SET} ≥ 1.8 V	x 0.992		x 1.008	V
			V_{SET} 〈 1.8 V	−18		18	mV
		−40°C ≤ Ta ≤ 105°C	V_{SET} ≥ 1.8 V	x 0.985		x 1.015	V
			V_{SET} 〈 1.8 V	−55		50	mV
I_{OUT}	Output Current			500			mA
$\Delta V_{OUT}/\Delta I_{OUT}$	Load regulation	1 mA ≤ I_{OUT} ≤ 500 mA			1	20	mV
V_{TRLD}	Load Transient Response	I_{OUT}: 1 mA⇔250 mA (tr = tf = 0.5 μs)	C_{OUT} = 1 μF		−75 +45		mV
			C_{OUT} = 2.2 μF		−55 +35		
		I_{OUT}: 1 mA⇔250 mA (tr = tf = 5 μs)	C_{OUT} = 1 μF		−20 +15		
V_{DIF}	Dropout Voltage	Refer to the *Dropout Voltage*					
I_{SS}	Supply Current	I_{OUT} = 0 mA			80	125	μA
Istandby	Standby Current	V_{CE} = 0 V			0.1	7.0	μA
$\Delta V_{OUT}/\Delta V_{IN}$	Line regulation	V_{SET} + 0.5 V ≤ V_{IN} ≤ 5.25 V, V_{IN} ≥ 1.4 V			0.02	0.10	%/V
I_{SC}	Short Current Limit	V_{OUT} = 0 V			50		mA
I_{PD}	CE Pull-down Current				0.3	0.6	μA
V_{CEH}	CE Input Voltage "H"			1.0			V
V_{CEL}	CE Input Voltage "L"					0.4	V
T_{TSD}	Thermal Shutdown Detection Temperature	Junction Temperature			165		°C
T_{TSR}	Thermal Shutdown Released Temperature	Junction Temperature			100		°C
R_{LOW}	LOW output Nch Tr. ON Resistance (RP111xxxD only)	V_{IN} = 4.0 V, V_{CE} = 0 V			60		Ω

All test items listed under Electrical Characteristics are done under the pulse load condition (Tj ≈ Ta = 25°C) except for Load Transient Response.

RP111xxx1D/B (-JE) (Fixed Output Voltage Type) Dropout Voltage (−40°C ≤ Ta ≤ 105°C)

Output Voltage V_{OUT} (V)	Dropout Voltage V_{DIF} (V)		
	Condition	Typ.	Max.
0.7 ≤ V_{SET} < 0.8	I_{OUT} = 500 mA	0.58	0.88
0.8 ≤ V_{SET} < 0.9		0.52	0.80
0.9 ≤ V_{SET} < 1.0		0.45	0.70
1.0 ≤ V_{SET} < 1.2		0.42	0.64
1.2 ≤ V_{SET} < 1.4		0.35	0.53
1.4 ≤ V_{SET} < 1.8		0.31	0.48
1.8 ≤ V_{SET} < 2.1		0.27	0.44
2.1 ≤ V_{SET} < 2.5		0.25	0.38
2.5 ≤ V_{SET} < 3.0		0.23	0.34
3.0 ≤ V_{SET} ≤ 3.6		0.22	0.32

V_{IN} = 2.5 V, I_{OUT} = 1 mA, C_{IN} = C_{OUT} = 1.0 μF, unless otherwise noted.

RP111x001D/B (-JE) (Adjustable Output Voltage Type) (−40°C ≤ Ta ≤ 105°C)

Symbol	Item	Conditions		Min.	Typ.	Max.	Unit
V_{FB}	Feedback pin output voltage	Ta = 25°C	V_{OUT} = V_{FB}	0.682	0.700	0.718	V
		−40°C ≤ Ta ≤ 105°C		0.645		0.750	
V_{OUT}	Adjustable Output Voltage Range			0.7		3.6	V
I_{OUT}	Output Current			500			mA
$\Delta V_{OUT}/\Delta I_{OUT}$	Load regulation	1 mA ≤ I_{OUT} ≤ 500 mA			1	20	mV
V_{TRLD}	Load Transient Response	I_{OUT}: 1 mA⇔250 mA (tr = tf = 0.5 μs)	C_{OUT} = 1 μF		−75 +45		mV
			C_{OUT} = 2.2 μF		−55 +35		
		I_{OUT}: 1 mA⇔250 mA (tr = tf = 5 μs)	C_{OUT} = 1 μF		−20 +15		
V_{DIF}	Dropout Voltage	V_{OUT} = V_{FB}	I_{OUT} = 500 mA			0.88	V
I_{SS}	Supply Current	I_{OUT} = 0 mA			80	125	μA
Istandby	Standby Current	V_{CE} = 0 V			0.1	7.0	μA
$\Delta V_{OUT}/\Delta V_{IN}$	Line regulation	V_{OUT} = V_{FB}, 1.4 V ≤ V_{IN} ≤ 5.25 V			0.02	0.10	%/V
I_{SC}	Short Current Limit	V_{OUT} = V_{FB} = 0 V			50		mA
I_{PD}	CE Pull-down Current				0.3	0.6	μA
V_{CEH}	CE Input Voltage "H"			1.0			V
V_{CEL}	CE Input Voltage "L"					0.4	V
T_{TSD}	Thermal Shutdown Detection Temperature	Junction Temperature			165		°C
T_{TSR}	Thermal Shutdown Released Temperature	Junction Temperature			100		°C

All test items listed under Electrical Characteristics are done under the pulse load condition (Tj ≈ Ta = 25°C) except for Load Transient Response.

TYPICAL APPLICATIONS

Internally Fixed Output Voltage

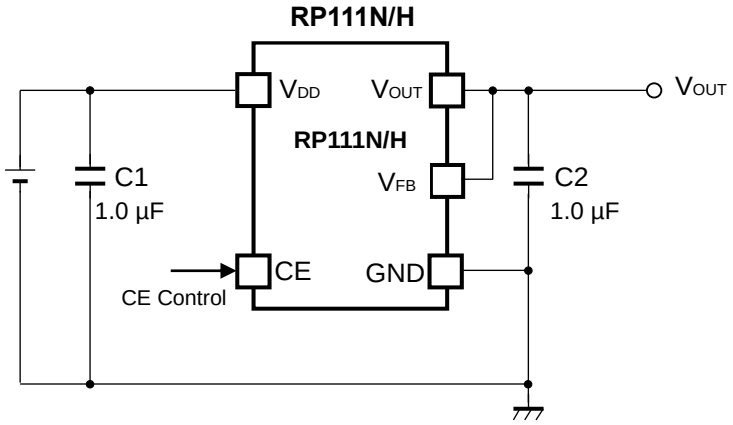

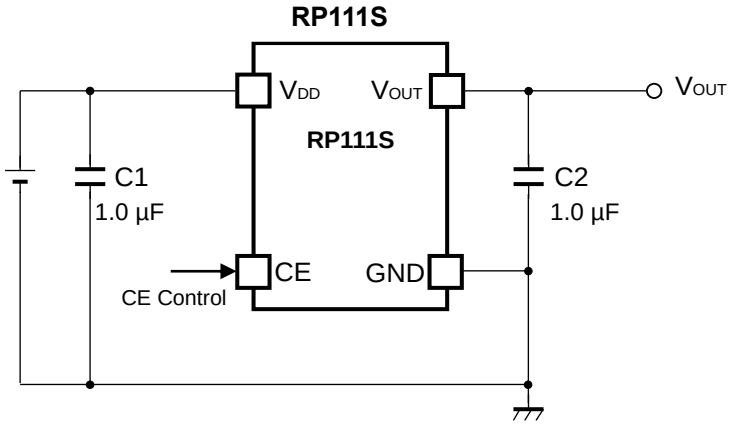

Externally Adjustable Output Voltage

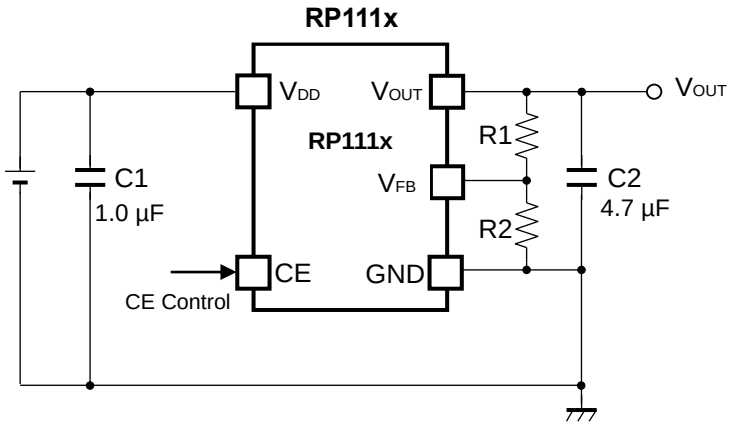

TECHNICAL NOTES

Phase Compensation

In this device, phase compensation is made for securing stable operation even if the load current is varied. For this purpose, use a 1.0 µF or more capacitor C2.

In case of using a tantalum capacitor, and its ESR is large, the output may be unstable. Therefore, select C2 carefully considering its frequency characteristics.

When using the Adjustable Output Voltage Type, set 4.7 µF or more of the output capacitor C2 as close as possible to the device, and make wiring as short as possible.

PCB Layout

Make V_{DD} and GND lines sufficient. If their impedance is high, noise pickup or unstable operation may result.

Connect a capacitor C1 with a capacitance value as much as 1.0 µF or more between V_{DD} and GND pin, and as close as possible to the pins.

Set external components, especially the output capacitor C2, as close as possible to the device, and make wiring as short as possible (Refer to *TYPICAL APPLICATIONS*).

Transient Response

When using the Adjustable Output Voltage Type, the transient response could be affected by the external resistors. Evaluate the circuit taking the actual conditions of use into account.

TYPICAL APPLICATION FOR IC CHIP BREAKDOWN PREVENTION

Internally Fixed Output Voltage

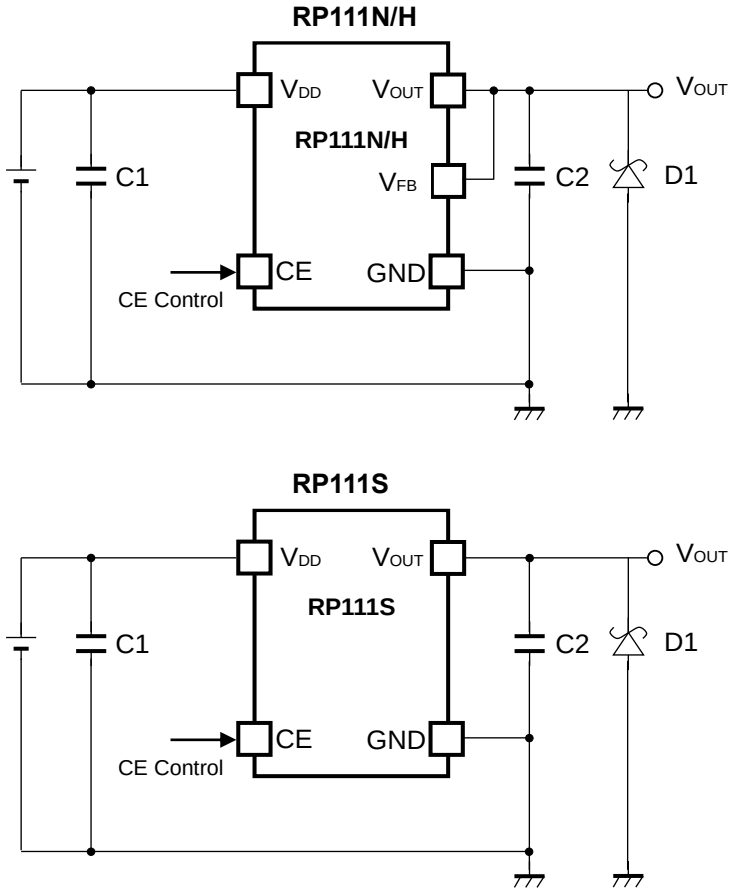

Externally Adjustable Output Voltage

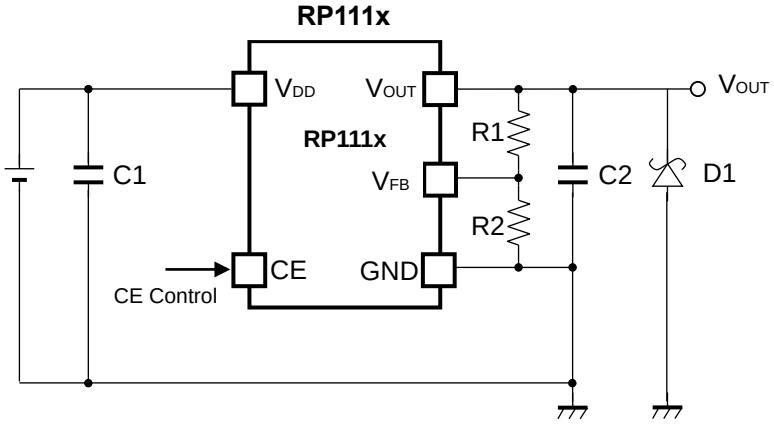

When a sudden surge of electrical current travels along the V_{OUT} pin and GND due to a short-circuit, electrical resonance of a circuit involving an output capacitor (C2) and a short circuit inductor generates a negative voltage and may damage the device or the load devices. Connecting a schottky diode (D1) between the V_{OUT} pin and GND has the effect of preventing damage to them.

ADJUSTABLE OUTPUT VOLTAGE SETTING

Output Voltage Setting

RP111x is capable of adjusting the output voltage by using the external divider resistors.
If the V_{FB} voltage fixed in the device is described as setV_{FB}, the output voltage can be set by using the following formulas.

$$I1 = I_{IC} + I2 \quad \cdots (1)$$
$$I2 = setV_{FB} / R2 \quad \cdots (2)$$

Thus,

$$I1 = I_{IC} + setV_{FB} / R2 \quad \cdots (3)$$

Therefore,

$$V_{OUT} = setV_{FB} + R1 \times I1 \quad \cdots (4)$$

Put formula (3) into formula (4), then

$$V_{OUT} = setV_{FB} + R1 \times (I_{IC} + setV_{FB} / R2)$$
$$= setV_{FB} \times (1 + R1/R2) + R1 \times I_{IC} \quad \cdots (5)$$

In formula (5), R1x I_{IC} is the error-causing factor in V_{OUT}.
As for I_{IC},

$$I_{IC} = setV_{FB} / R_{IC} \quad \cdots (6)$$

Therefore, the error-causing factor R1x I_{IC} can be described as follows.

$$R1 \times I_{IC} = R1 \times setV_{FB} / R_{IC}$$
$$= setV_{FB} \times R1 / R_{IC} \quad \cdots (7)$$

For better accuracy, choosing R1 ($<<R_{IC}$) reduces this error.
Without the error-causing factor R1x I_{IC}, the output voltage can be calculated by the following formula.

$$V_{OUT} = setV_{FB} \times ((R1 + R2) / R2) \quad \cdots (8)$$

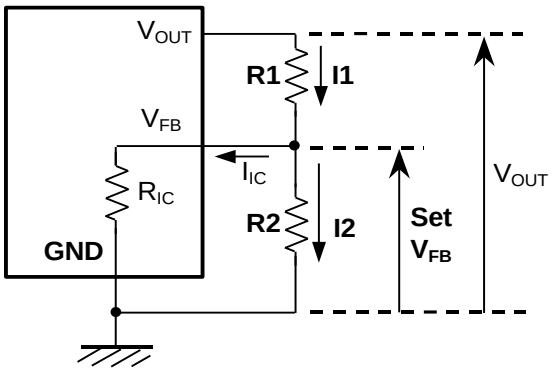

The output voltage of the externally adjustable output voltage type should be set to 3.6 V or less.

The resistance of R2 should be 16 kΩ or less.

TRANSIENT RESPONSE

The RP111x has been improved in overall output voltage characteristics including temperature and transient response. The load transient response indicated under the Electrical Characteristics is guaranteed by design based on the condition when I_{OUT} changes from 1 mA to 250 mA or 250 mA to 1 mA. The output voltage variations under the other load conditions, the characteristic examples are shown below.

RP111x151x

V_{IN} = 2.5 V, −40°C ≤ Ta ≤ 85°C

C_{IN} = 1.0 µF, C_{OUT} = 1.0 µF, I_{OUT} = 1 mA⇔Peak Output Current (tr=tf=0.5µs)

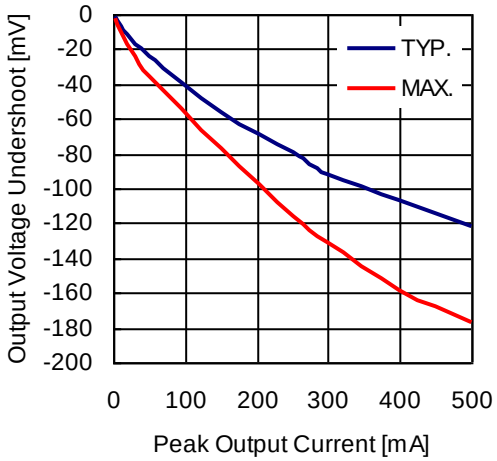

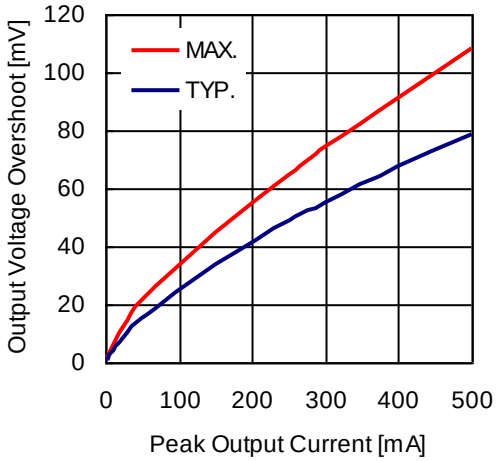

C_{IN} = 1.0 µF, C_{OUT} = 2.2 µF, I_{OUT} = 1 mA⇔Peak Output Current (tr=tf=0.5µs)

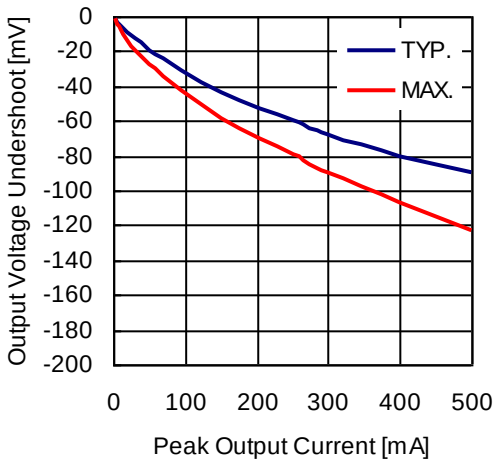

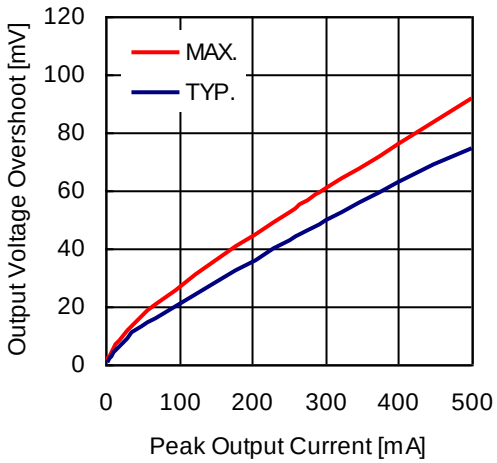

C_{IN} = 1.0 µF, C_{OUT} = 1.0 µF, I_{OUT} = 1 mA⇔Peak Output Current (tr=tf=5.0µs)

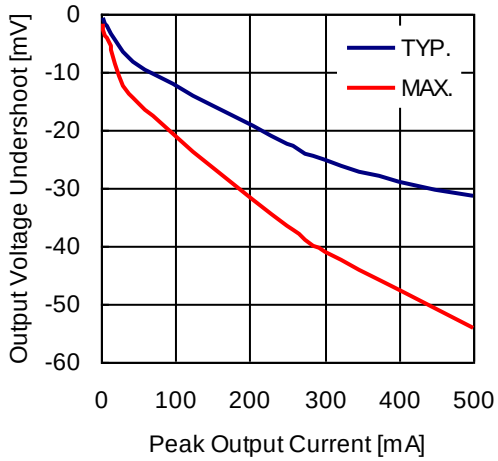

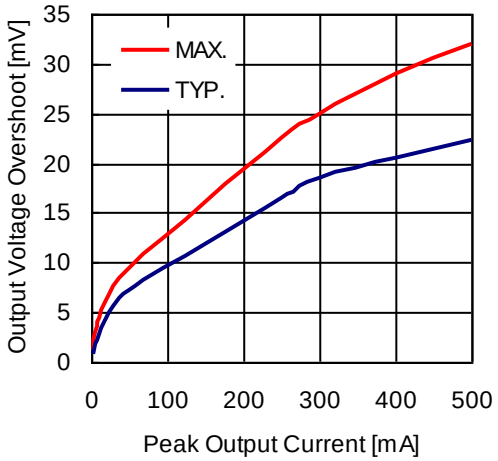

RP111x281x

V_{IN} = 3.8 V, −40°C ≤ Ta ≤ 85°C

C_{IN} = 1.0 µF, C_{OUT} = 1.0 µF, I_{OUT} = 1 mA⇔Peak Output Current (tr=tf=0.5µs)

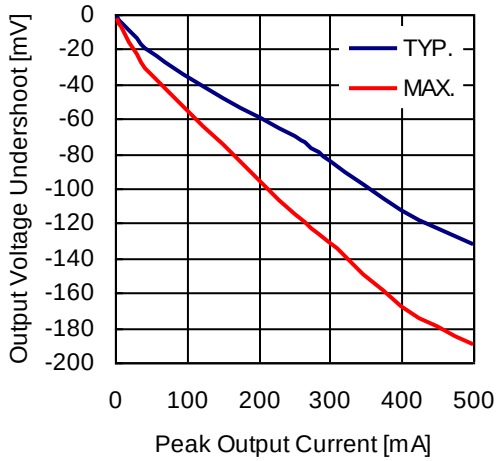

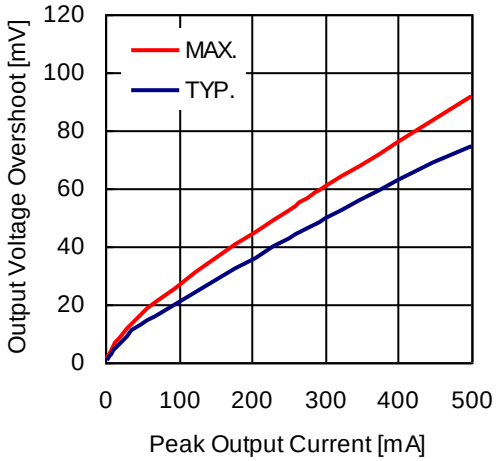

C_{IN} = 1.0 µF, C_{OUT} = 2.2 µF, I_{OUT} = 1 mA⇔Peak Output Current (tr=tf=0.5µs)

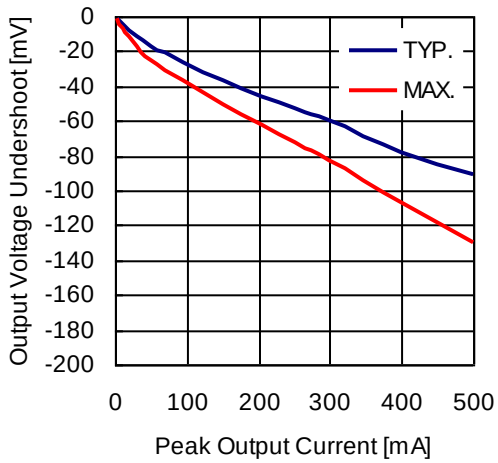

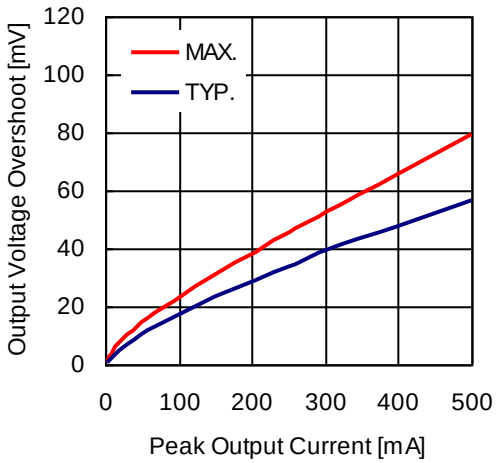

C_{IN} = 1.0 µF, C_{OUT} = 1.0 µF, I_{OUT} = 1 mA⇔Peak Output Current (tr=tf=5.0µs)

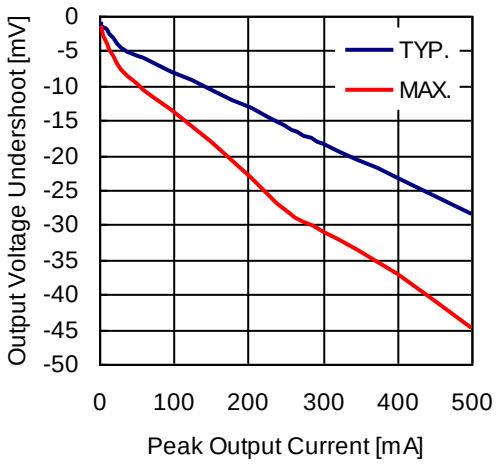

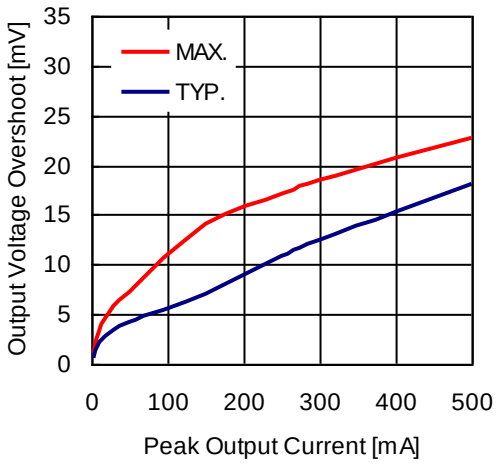

Input Transient Response has the output voltage dependency. Please refer to the characteristic examples below.

V_{IN}: V_{SET} + 0.5 V⇔V_{SET} + 1.5 V (tr = tf = 5.0 µs), V_{IN} ≥ 1.4 V,
C_{OUT} = 1.0 µF, I_{OUT} = 30 mA

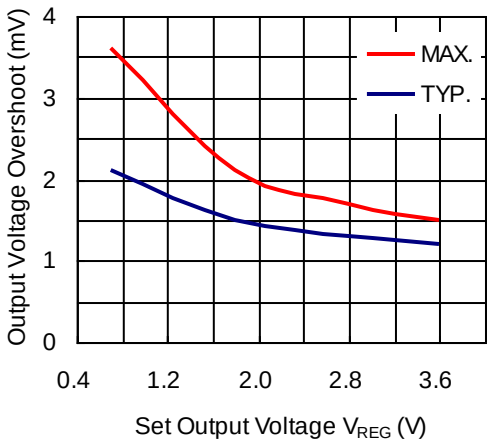

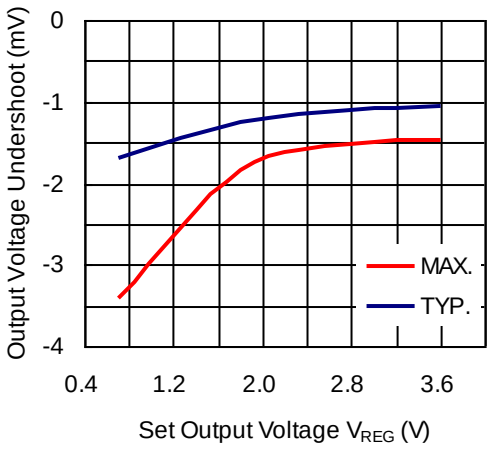

The graphs shown above are reference data.
For the better transient response, a capacitor with higher capacitance is recommended and the wire impedance of GND and V_{OUT} should be minimized as possible.
The transient response characteristics depend on the external parts and PCB layout. Therefore, the operating conditions for the transient response in the application should be considered and evaluation is necessary.

PACKAGE INFORMATION

POWER DISSIPATION (SOT-23-5)

The power dissipation of the package is dependent on PCB material, layout, and environmental conditions. The following measurement conditions are based on JEDEC STD. 51-7.

Measurement Conditions

Item	Measurement Conditions
Environment	Mounting on Board (Wind Velocity = 0 m/s)
Board Material	Glass Cloth Epoxy Plastic (Four-Layer Board)
Board Dimensions	76.2 mm × 114.3 mm × 0.8 mm
Copper Ratio	Outer Layer (First Layer): Less than 95% of 50 mm Square Inner Layers (Second and Third Layers): Approx. 100% of 50 mm Square Outer Layer (Fourth Layer): Approx. 100% of 50 mm Square
Through-holes	ϕ 0.3 mm × 7 pcs

Measurement Result (Ta = 25°C, Tjmax = 150°C)

Item	Measurement Result
Power Dissipation	830 mW
Thermal Resistance (θja)	θja = 150°C/W
Thermal Characterization Parameter (ψjt)	ψjt = 51°C/W

θja: Junction-to-Ambient Thermal Resistance

ψjt: Junction-to-Top Thermal Characterization Parameter

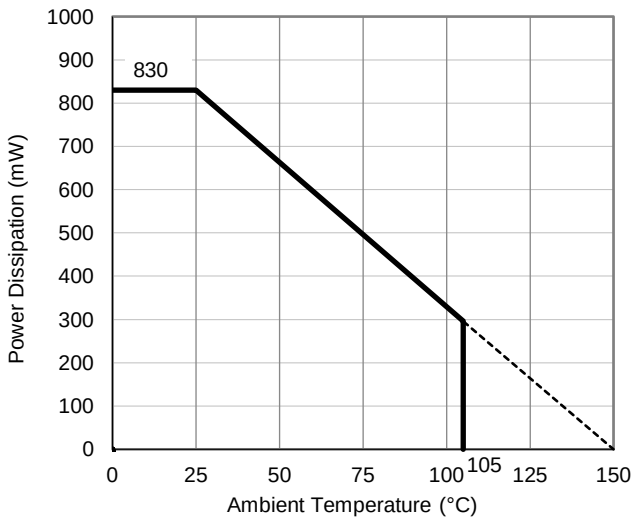

Power Dissipation vs. Ambient Temperature

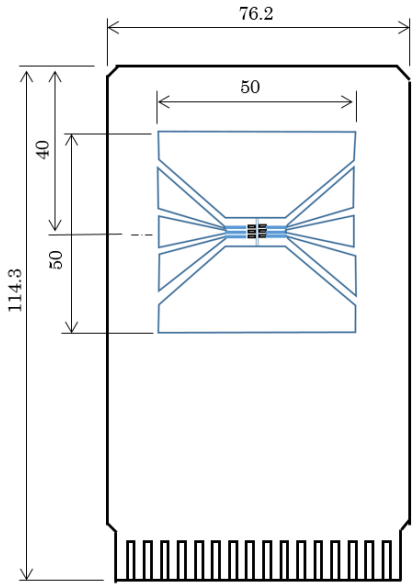

Measurement Board Pattern

PACKAGE DIMENSIONS (SOT-23-5)

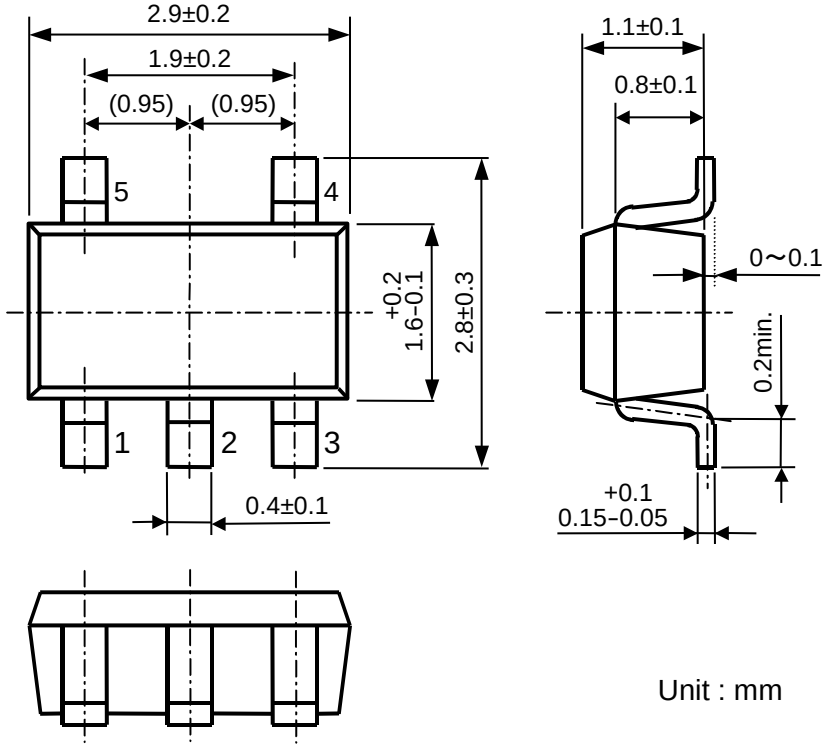

Unit : mm

MARK SPECIFICATION (SOT-23-5)

①②③: Product Code … **Refer to *MARK SPECIFICATION TABLE (SOT-23-5)***
④⑤: Lot Number … Alphanumeric Serial Number

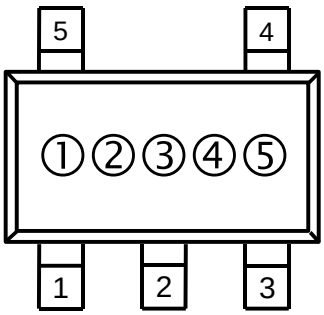

NOTICE

There can be variation in the marking when different AOI (Automated Optical Inspection) equipment is used. In the case of recognizing the marking characteristic with AOI, please contact our sales or our distributor before attempting to use AOI.

MARK SPECIFICATION TABLE (SOT-23-5)

RP111Nxx1B

Product Name	①	②	③	V_{SET}
RP111N071B	H	0	7	0.7 V
RP111N111B	H	1	1	1.1 V
RP111N121B	H	1	2	1.2 V
RP111N151B	H	1	5	1.5 V
RP111N181B	H	1	8	1.8 V
RP111N251B	H	2	5	2.5 V
RP111N281B	H	2	8	2.8 V
RP111N281B5	H	4	0	2.85 V
RP111N291B	H	2	9	2.9 V
RP111N301B	H	3	0	3.0 V
RP111N331B	H	3	3	3.3 V
RP111N341B	H	3	4	3.4 V

RP111Nxx1D

Product Name	①	②	③	V_{SET}
RP111N071D	J	0	7	0.7 V
RP111N111D	J	1	1	1.1 V
RP111N121D	J	1	2	1.2 V
RP111N151D	J	1	5	1.5 V
RP111N181D	J	1	8	1.8 V
RP111N251D	J	2	5	2.5 V
RP111N281D	J	2	8	2.8 V
RP111N281D5	J	4	0	2.85 V
RP111N291D	J	2	9	2.9 V
RP111N301D	J	3	0	3.0 V
RP111N331D	J	3	3	3.3 V
RP111N341D	J	3	4	3.4 V

RP111N001B (Adjustable Output Voltage Type)

Product Name	①	②	③	V_{SET}
RP111N001B	H	0	0	-

RP111N001D (Adjustable Output Voltage Type)

Product Name	①	②	③	V_{SET}
RP111N001D	J	0	0	-

POWER DISSIPATION (SOT-89-5)

The power dissipation of the package is dependent on PCB material, layout, and environmental conditions. The following measurement conditions are based on JEDEC STD. 51-7.

Measurement Conditions

Item	Measurement Conditions
Environment	Mounting on Board (Wind Velocity = 0 m/s)
Board Material	Glass Cloth Epoxy Plastic (Four-Layer Board)
Board Dimensions	76.2 mm × 114.3 mm × 0.8 mm
Copper Ratio	Outer Layer (First Layer): Less than 95% of 50 mm Square Inner Layers (Second and Third Layers): Approx. 100% of 50 mm Square Outer Layer (Fourth Layer): Approx. 100% of 50 mm Square
Through-holes	ϕ 0.3 mm × 13 pcs

Measurement Result (Ta = 25°C, Tjmax = 150°C)

Item	Measurement Result
Power Dissipation	3200 mW
Thermal Resistance (θja)	θja = 38°C/W
Thermal Characterization Parameter (ψjt)	ψjt = 13°C/W

θja: Junction-to-Ambient Thermal Resistance

ψjt: Junction-to-Top Thermal Characterization Parameter

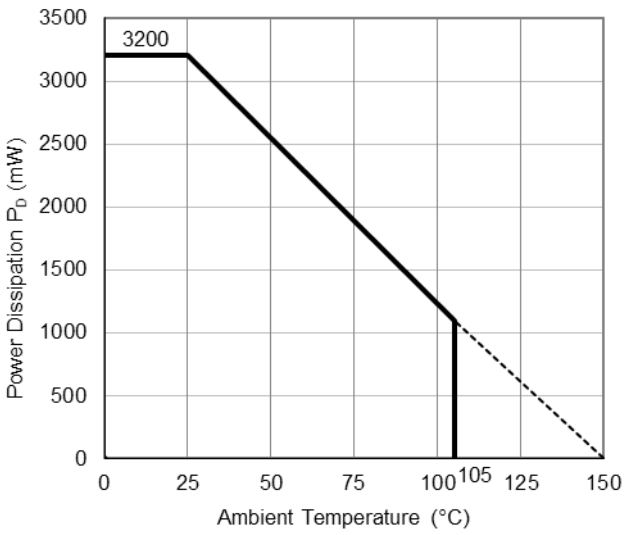

Power Dissipation vs. Ambient Temperature

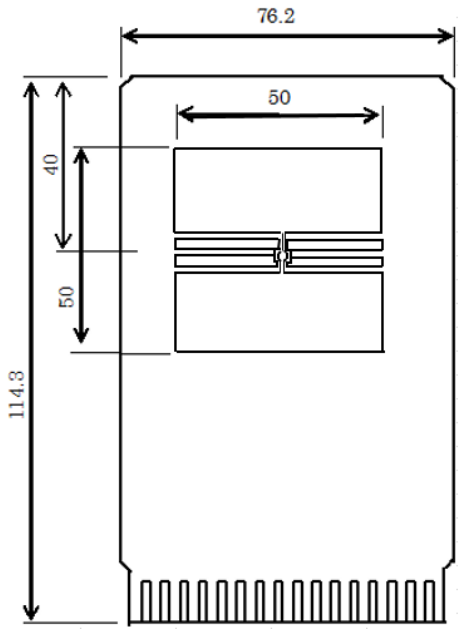

Measurement Board Pattern

PACKAGE DIMENSIONS (SOT-89-5)

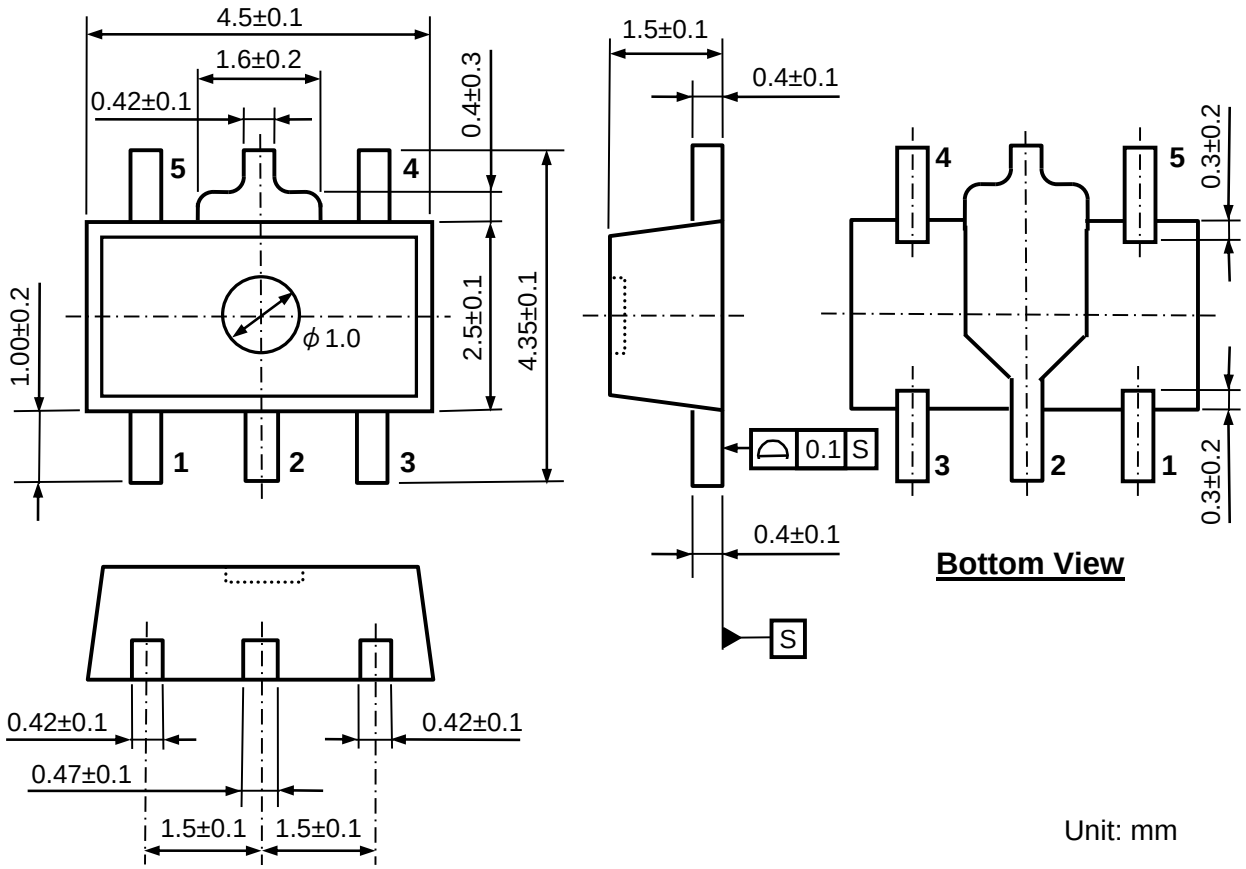

Unit: mm

MARK SPECIFICATION (SOT-89-5)

①②③④: Product Code … **Refer to *MARK SPECIFICATION TABLE (SOT-89-5)***

⑤⑥: Lot Number … Alphanumeric Serial Number

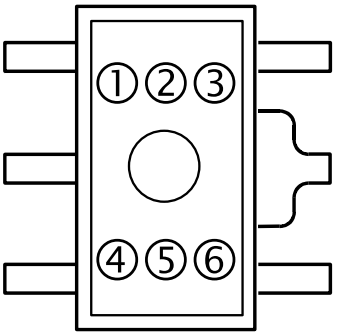

NOTICE

There can be variation in the marking when different AOI (Automated Optical Inspection) equipment is used. In the case of recognizing the marking characteristic with AOI, please contact our sales or our distributor before attempting to use AOI.

MARK SPECIFICATION TABLE (SOT-89-5)

RP111Hxx1B

Product Name	① ② ③ ④	V_{SET}
RP111H071B	A 0 7 B	0.7 V
RP111H111B	A 1 1 B	1.1 V
RP111H121B	A 1 2 B	1.2 V
RP111H151B	A 1 5 B	1.5 V
RP111H181B	A 1 8 B	1.8 V
RP111H251B	A 2 5 B	2.5 V
RP111H281B	A 2 8 B	2.8 V
RP111H281B5	A 4 0 B	2.85 V
RP111H291B	A 2 9 B	2.9 V
RP111H301B	A 3 0 B	3.0 V
RP111H331B	A 3 3 B	3.3 V
RP111H341B	A 3 4 B	3.4 V

RP111Hxx1D

Product Name	① ② ③ ④	V_{SET}
RP111H071D	A 0 7 D	0.7 V
RP111H111D	A 1 1 D	1.1 V
RP111H121D	A 1 2 D	1.2 V
RP111H151D	A 1 5 D	1.5 V
RP111H181D	A 1 8 D	1.8 V
RP111H251D	A 2 5 D	2.5 V
RP111H281D	A 2 8 D	2.8 V
RP111H281D5	A 4 0 D	2.85 V
RP111H291D	A 2 9 D	2.9 V
RP111H301D	A 3 0 D	3.0 V
RP111H331D	A 3 3 D	3.3 V
RP111H341D	A 3 4 D	3.4 V

RP111H001B (Adjustable Output Voltage Type)

Product Name	① ② ③ ④	V_{SET}
RP111H001B	A 0 0 B	-

RP111H001D (Adjustable Output Voltage Type)

Product Name	① ② ③ ④	V_{SET}
RP111H001D	A 0 0 D	-

POWER DISSIPATION (HSOP-6J)

The power dissipation of the package is dependent on PCB material, layout, and environmental conditions. The following measurement conditions are based on JEDEC STD. 51-7.

Measurement Conditions

Item	Measurement Conditions
Environment	Mounting on Board (Wind Velocity = 0 m/s)
Board Material	Glass Cloth Epoxy Plastic (Four-Layer Board)
Board Dimensions	76.2 mm × 114.3 mm × 0.8 mm
Copper Ratio	Outer Layer (First Layer): Less than 95% of 50 mm Square Inner Layers (Second and Third Layers): Approx. 100% of 50 mm Square Outer Layer (Fourth Layer): Approx. 100% of 50 mm Square
Through-holes	ϕ 0.3 mm × 28 pcs

Measurement Result (Ta = 25°C, Tjmax = 150°C)

Item	Measurement Result
Power Dissipation	3400 mW
Thermal Resistance (θja)	θja = 37°C/W
Thermal Characterization Parameter (ψjt)	ψjt = 7°C/W

θja: Junction-to-Ambient Thermal Resistance

ψjt: Junction-to-Top Thermal Characterization Parameter

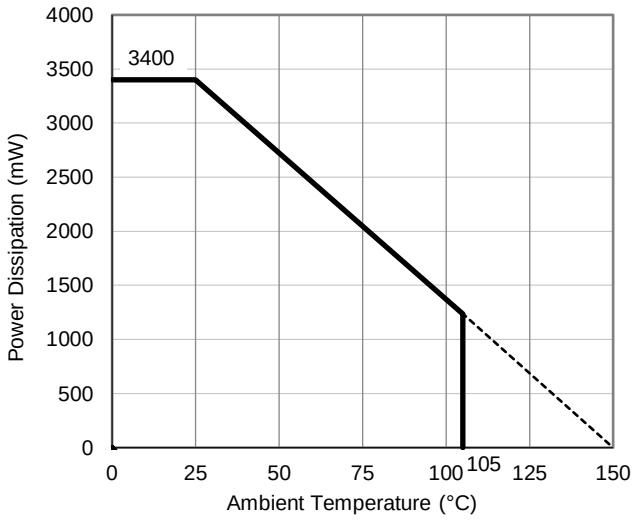

Power Dissipation vs. Ambient Temperature

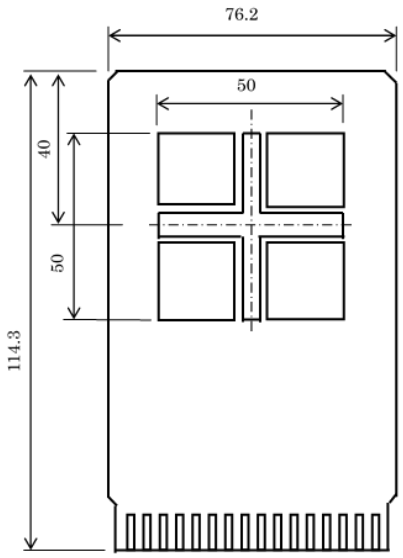

Measurement Board Pattern

PACKAGE DIMENSIONS (HSOP-6J)

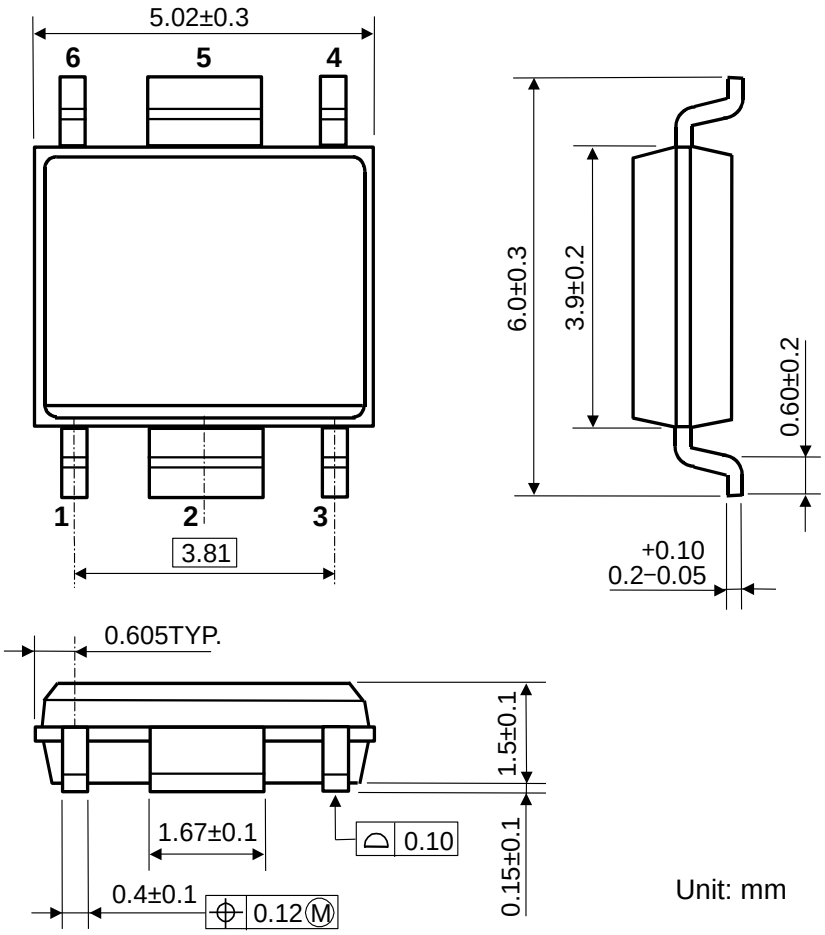

Unit: mm

MARK SPECIFICATION (HSOP-6J)

①②③④: Product Code … **Refer to *MARK SPECIFICATION TABLE (HSOP-6J)***

⑤⑥: Lot Number … Alphanumeric Serial Number

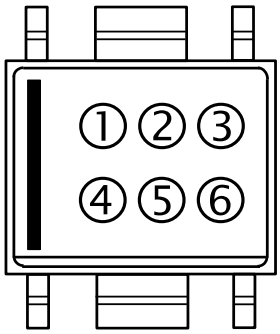

NOTICE

There can be variation in the marking when different AOI (Automated Optical Inspection) equipment is used. In the case of recognizing the marking characteristic with AOI, please contact our sales or our distributor before attempting to use AOI.

MARK SPECIFICATION TABLE (HSOP-6J)

RP111Sxx1B

Product Name	① ② ③ ④	V_{SET}
RP111S071B	C 0 7 B	0.7 V
RP111S111B	C 1 1 B	1.1 V
RP111S121B	C 1 2 B	1.2 V
RP111S151B	C 1 5 B	1.5 V
RP111S181B	C 1 8 B	1.8 V
RP111S251B	C 2 5 B	2.5 V
RP111S281B	C 2 8 B	2.8 V
RP111S281B5	C 4 0 B	2.85 V
RP111S291B	C 2 9 B	2.9 V
RP111S301B	C 3 0 B	3.0 V
RP111S331B	C 3 3 B	3.3 V
RP111S341B	C 3 4 B	3.4 V

RP111Sxx1D

Product Name	① ② ③ ④	V_{SET}
RP111S071D	C 0 7 D	0.7 V
RP111S111D	C 1 1 D	1.1 V
RP111S121D	C 1 2 D	1.2 V
RP111S151D	C 1 5 D	1.5 V
RP111S181D	C 1 8 D	1.8 V
RP111S251D	C 2 5 D	2.5 V
RP111S281D	C 2 8 D	2.8 V
RP111S281D5	C 4 0 D	2.85 V
RP111S291D	C 2 9 D	2.9 V
RP111S301D	C 3 0 D	3.0 V
RP111S331D	C 3 3 D	3.3 V
RP111S341D	C 3 4 D	3.4 V

RP111S001B (Adjustable Output Voltage Type)

Product Name	① ② ③ ④	V_{SET}
RP111S001B	C 0 0 B	-

RP111S001D (Adjustable Output Voltage Type)

Product Name	① ② ③ ④	V_{SET}
RP111S001D	C 0 0 D	-

TYPICAL CHARACTERISTICS

Note: Typical Characteristics are intended to be used as reference data; they are not guaranteed.

1) Output Voltage vs. Output Current (C1 = Ceramic 1.0 µF, C2 = Ceramic 1.0 µF, Ta = 25°C)

RP111x071x

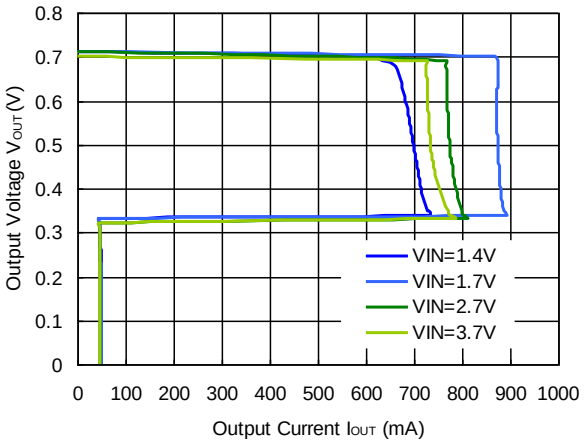

RP111x171x

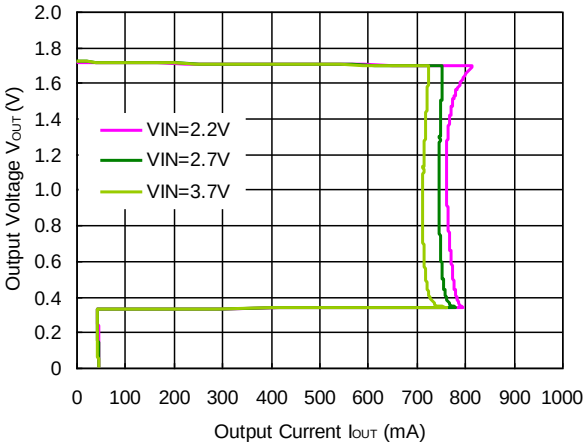

RP111x181x

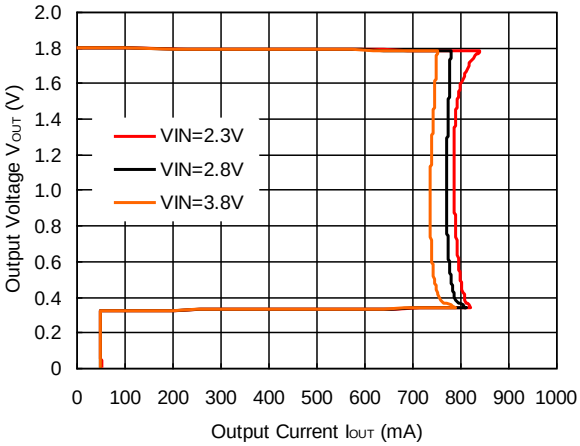

RP111x281x

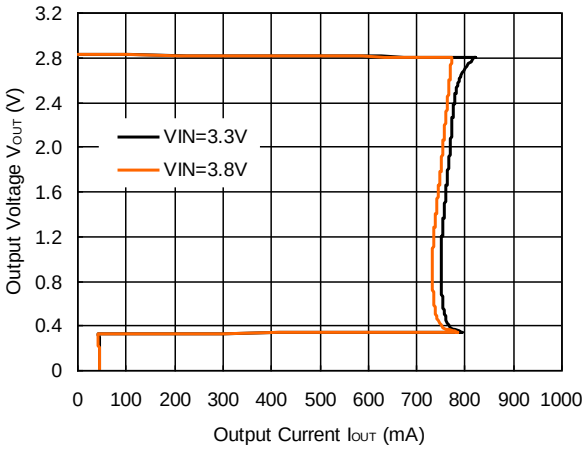

RP111x361x

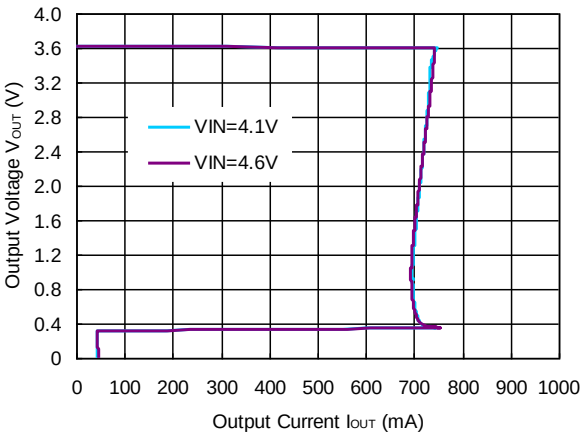

2) Output Voltage vs. Input Voltage (C1 = Ceramic 1.0 µF, C2 = Ceramic 1.0 µF, Ta = 25°C)

RP111x071x

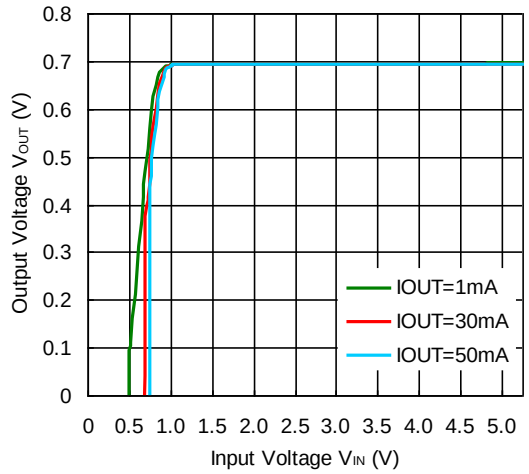

RP111x171x

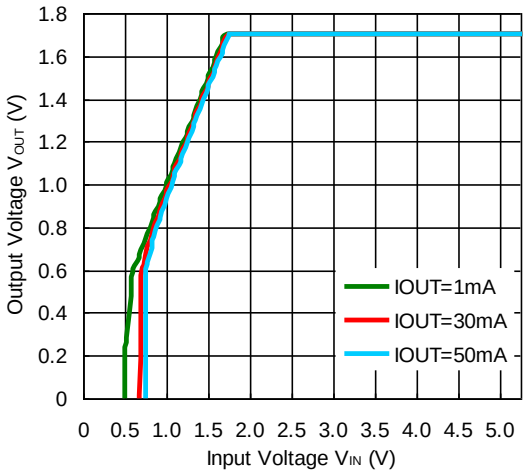

RP111x181x

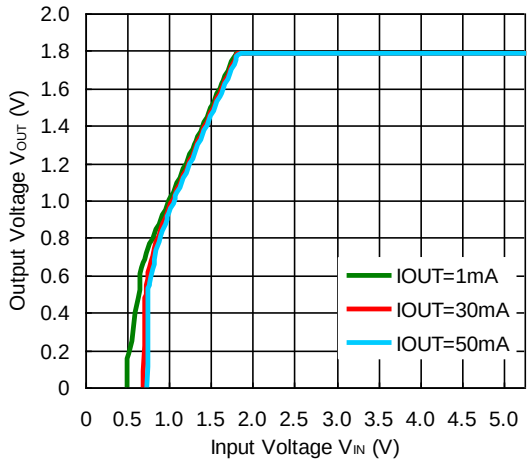

RP111x281x

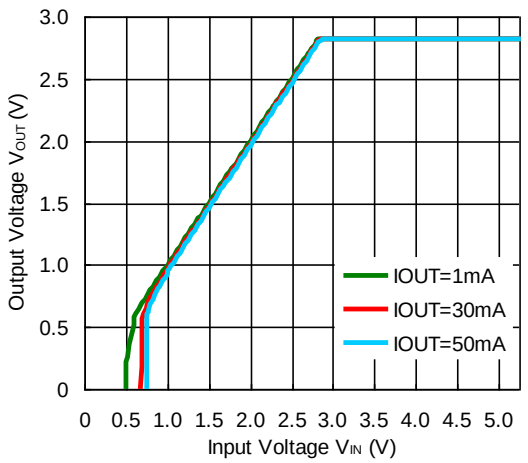

RP111x361x

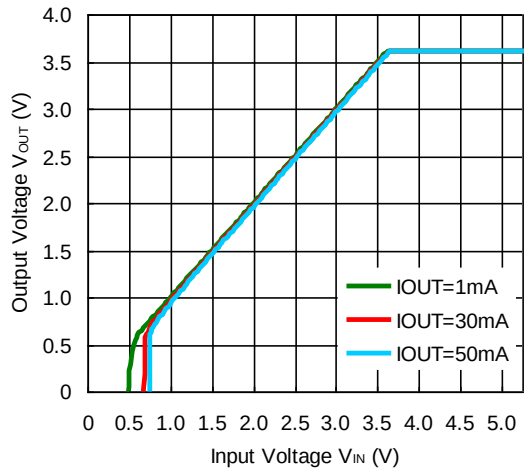

3) Supply Current vs. Input Voltage (C1 = Ceramic 1.0 μF, C2 = Ceramic 1.0 μF, Ta = 25°C)

RP111x071x

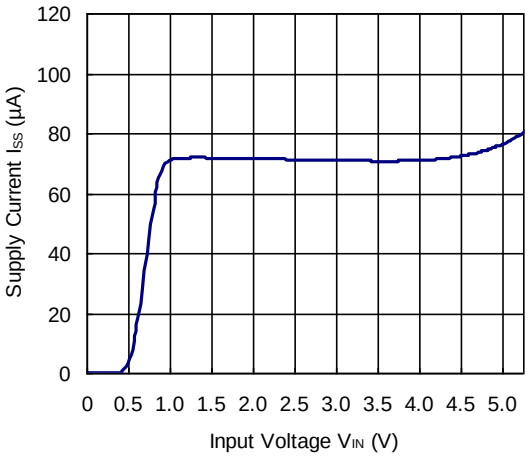

RP111x171x

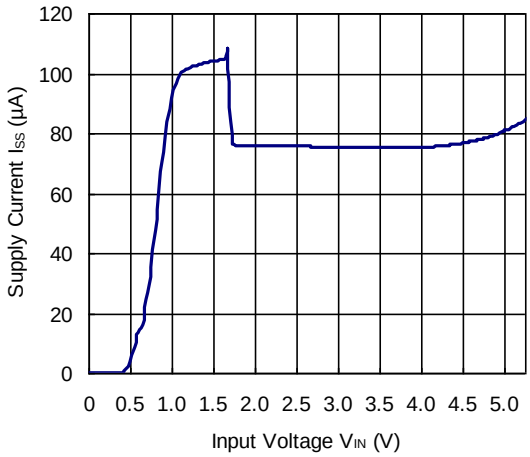

RP111x181x

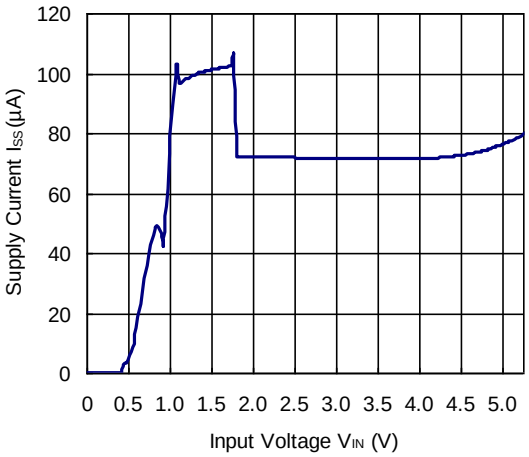

RP111x281x

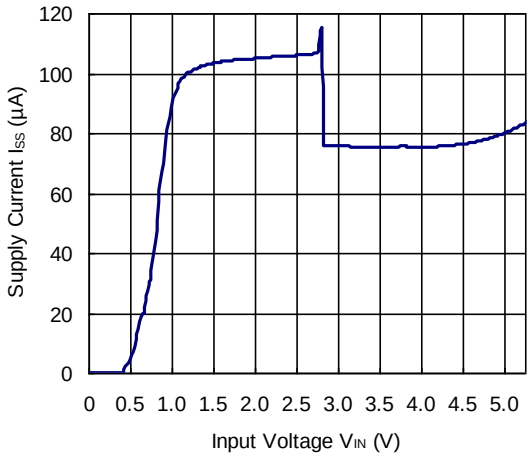

RP111x361x

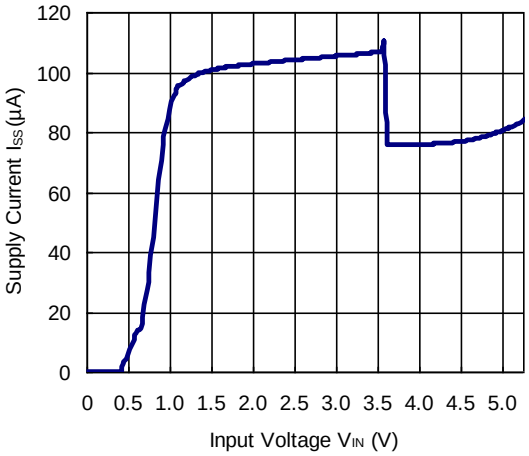

4) Output Voltage vs. Temperature (C1 = Ceramic 1.0 µF, C2 = Ceramic 1.0 µF, I_{OUT} = 1 mA)

RP111x071x

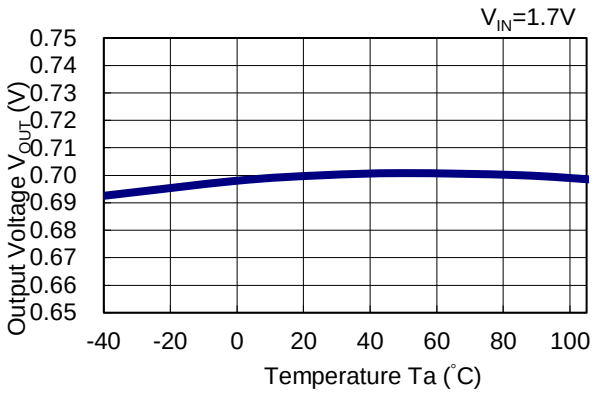

RP111x171x

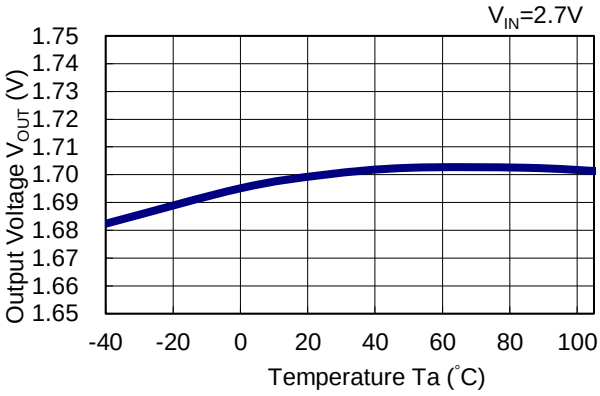

RP111x181x

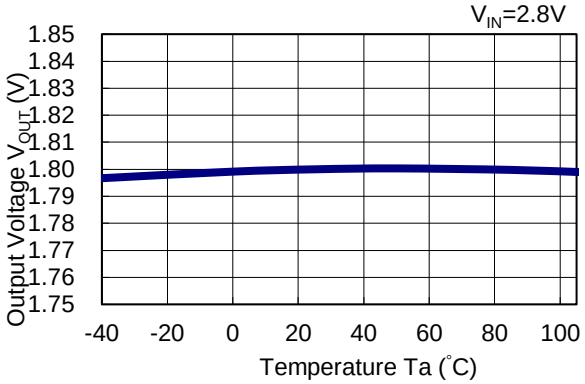

RP111x281x

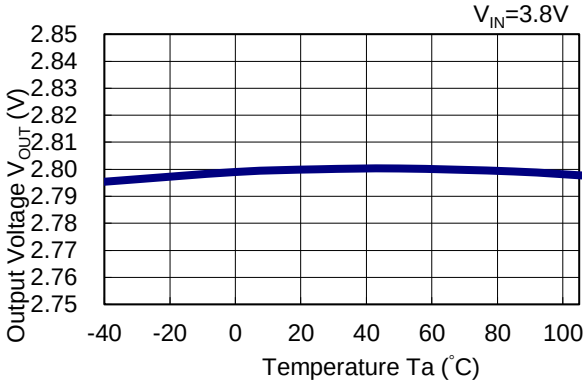

RP111x361x

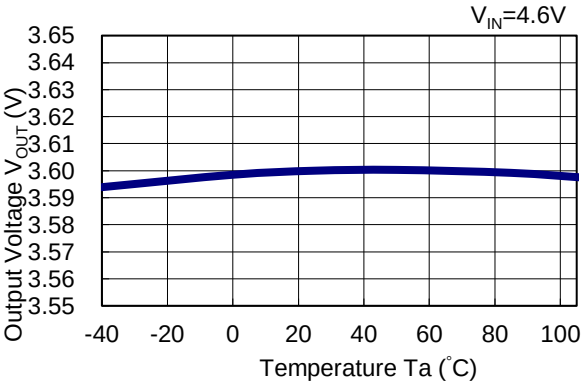

5) Supply Current vs. Temperature (C1 = Ceramic 1.0 μF, C2 = Ceramic 1.0 μF, I_{OUT} = 0 mA)

RP111x071x

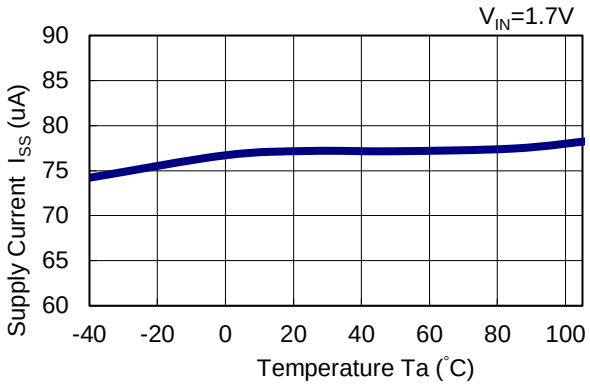

RP111x171x

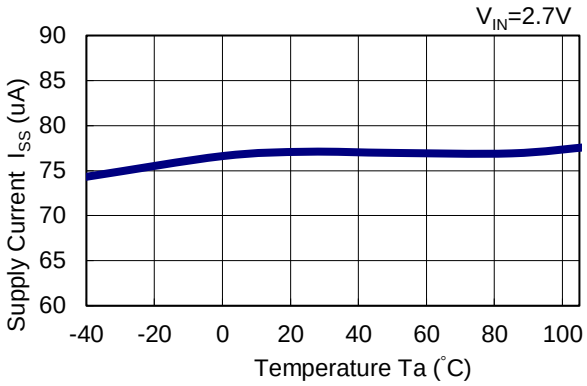

RP111x181x

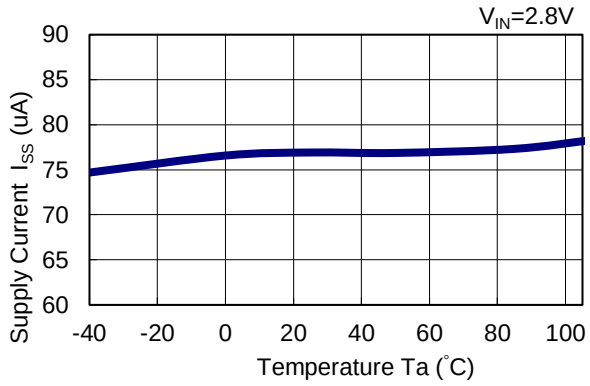

RP111x281x

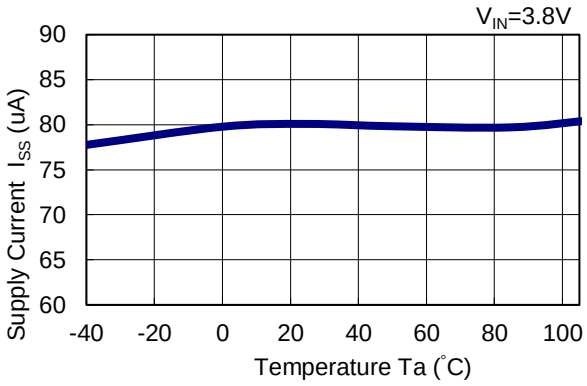

RP111x361x

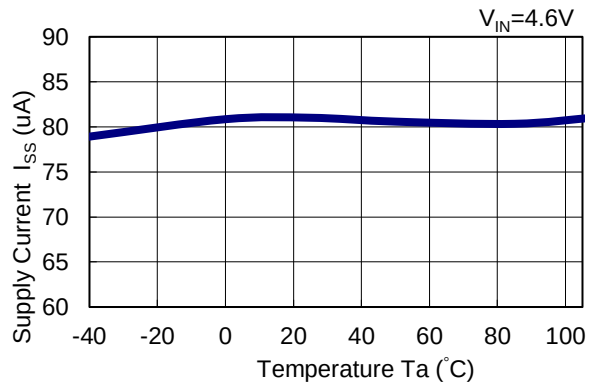

6) Dropout Voltage vs. Output Current (C1 = Ceramic 1.0 μF, C2 = Ceramic 1.0 μF)

RP111x071x

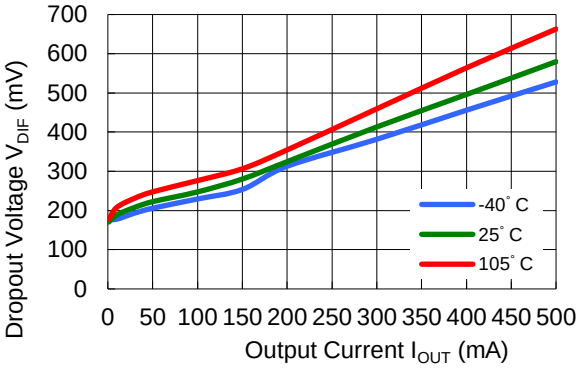

RP111x171x

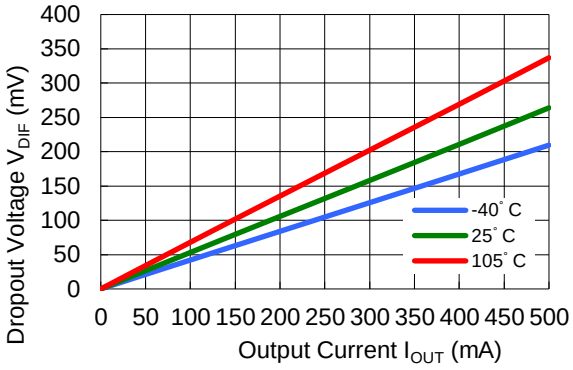

RP111x181x

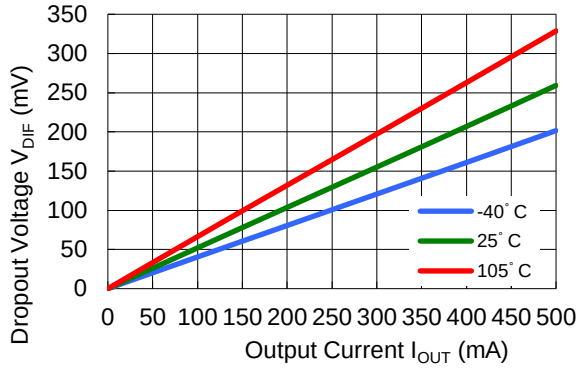

RP111x281x

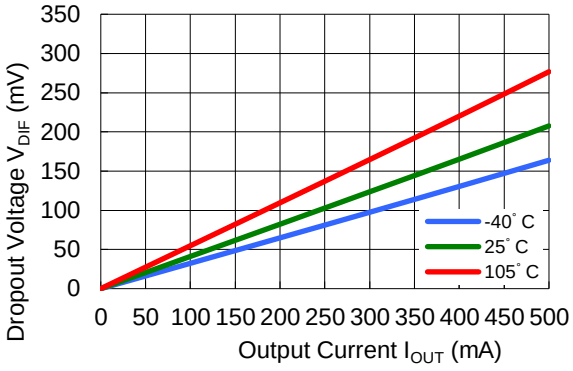

RP111x361x

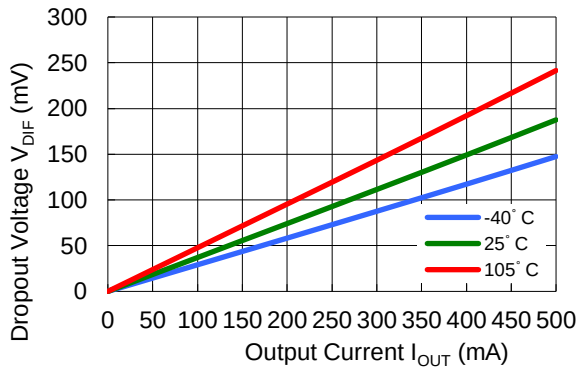

7) Dropout Voltage vs. Set Output Voltage (C1= Ceramic 1.0 µF, C2 = Ceramic 1.0 µF, Ta = 25°C)

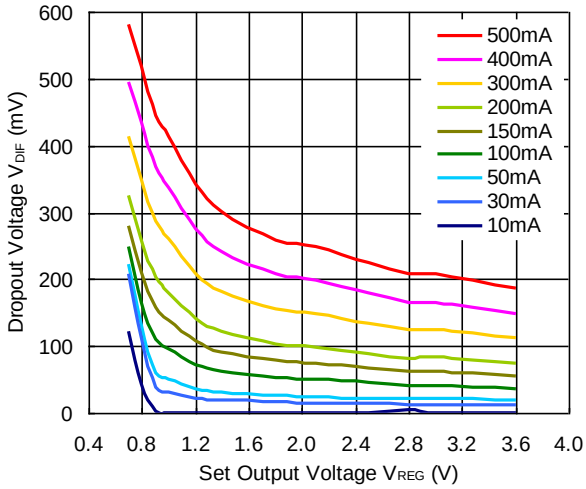

8) Dropout Voltage vs. Temperature (C1 = Ceramic 1.0 µF, C2 = Ceramic 1.0 µ F)

RP111x071x

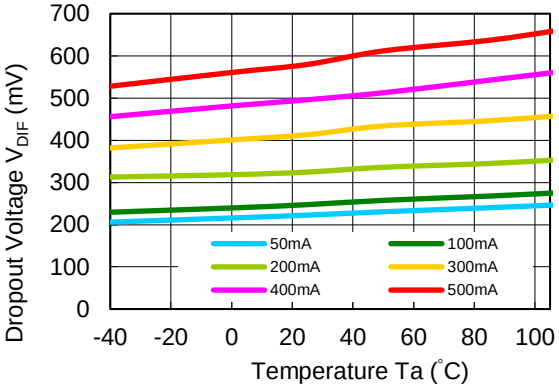

RP111x171xx

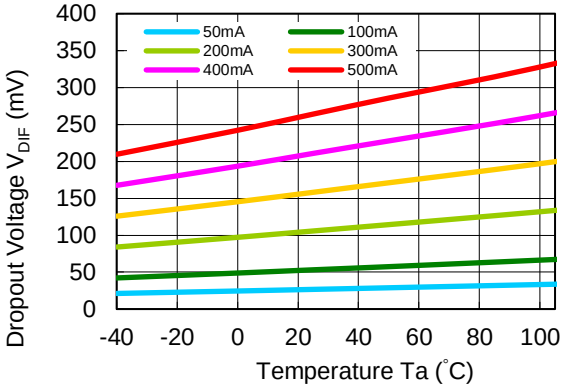

RP111x181x

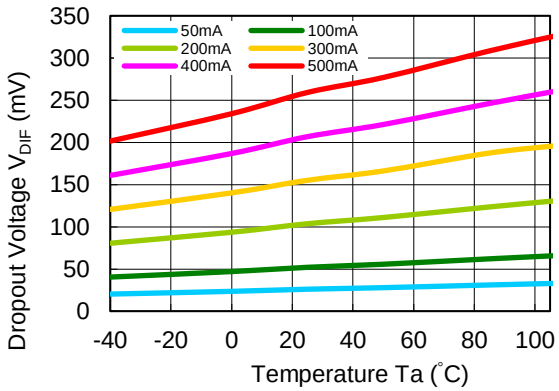

RP111x281x

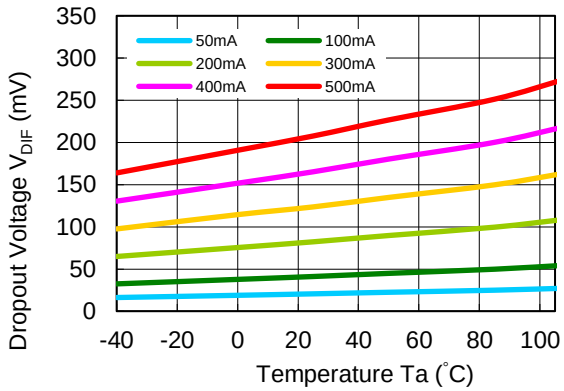

RP111x361x

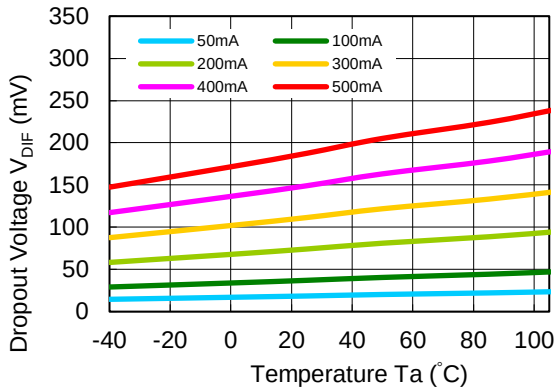

9) Ripple Rejection vs. Input Voltage (C1 = none, C2 = Ceramic 1.0 µF, Ripple = 0.2 V p-p, Ta = 25°C)

RP111x071x

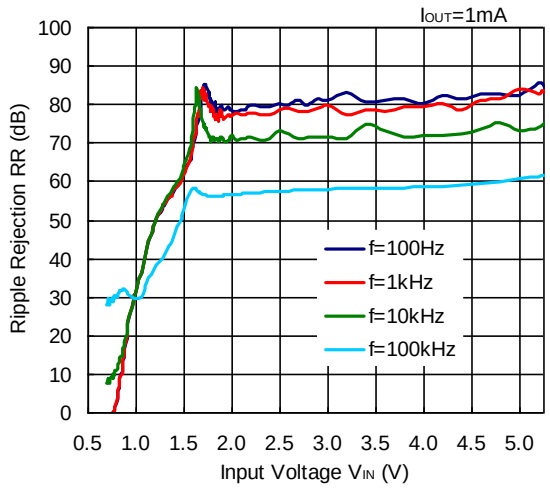

RP111x071x

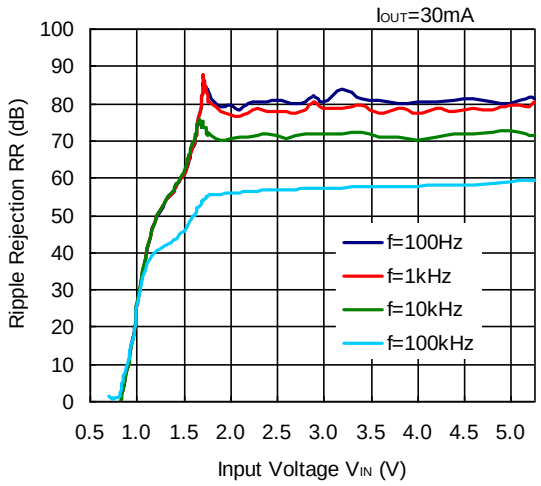

RP111x171x

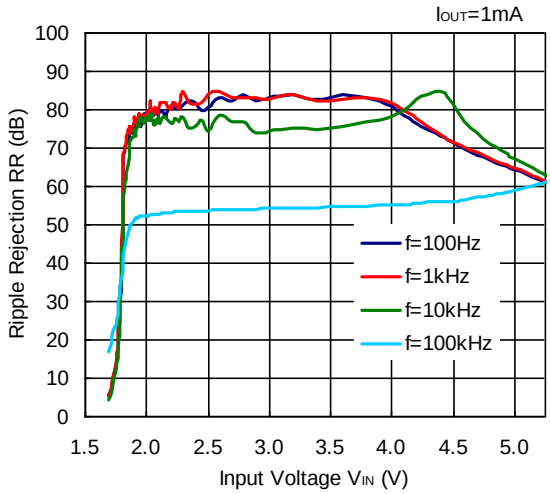

RP111x171x

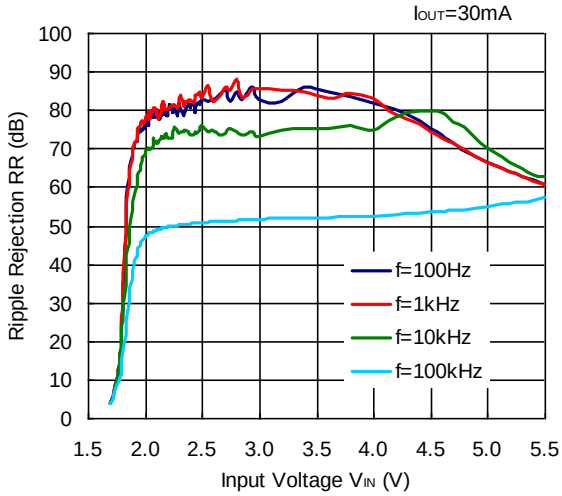

RP111x181x

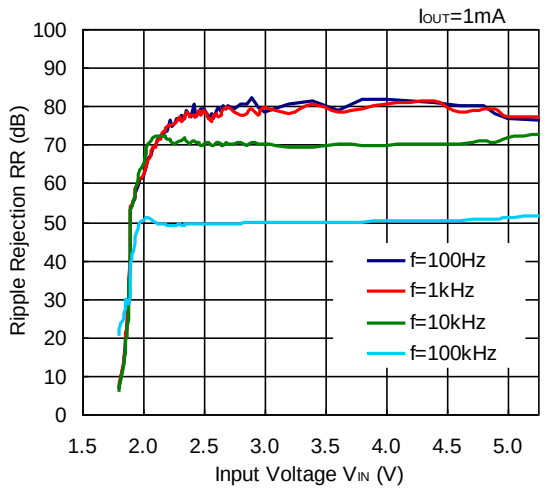

RP111x181x

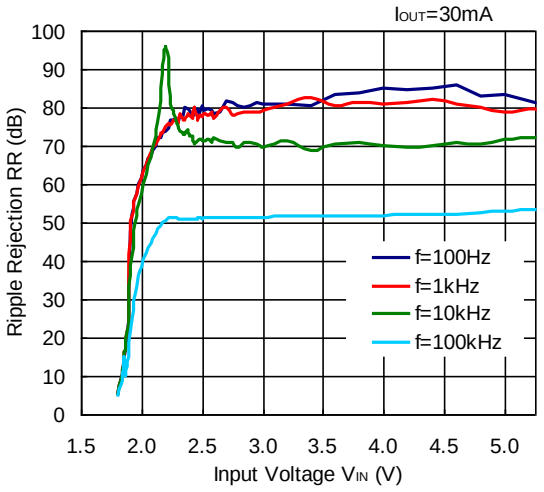

RP111x281x

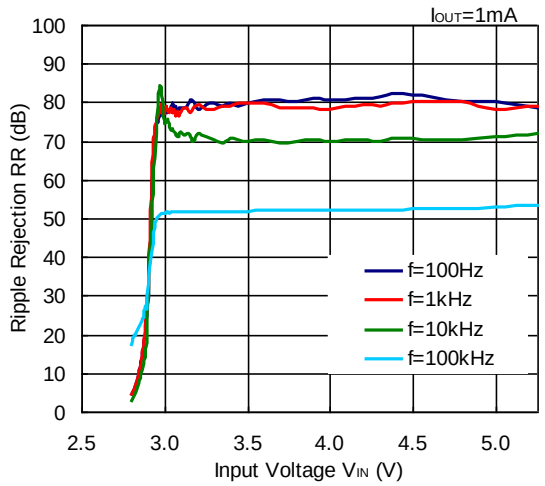

RP111x281x

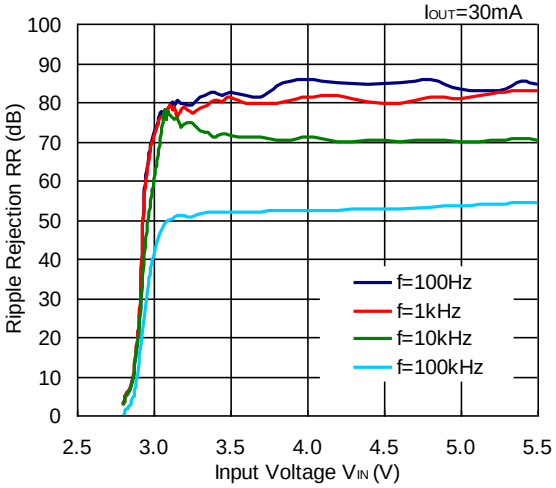

RP111x361x

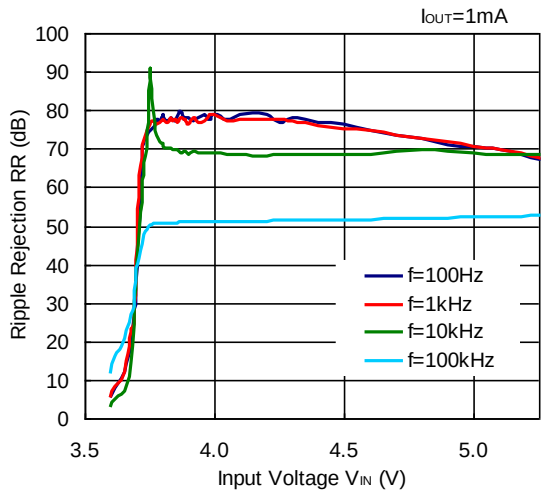

RP111x361x

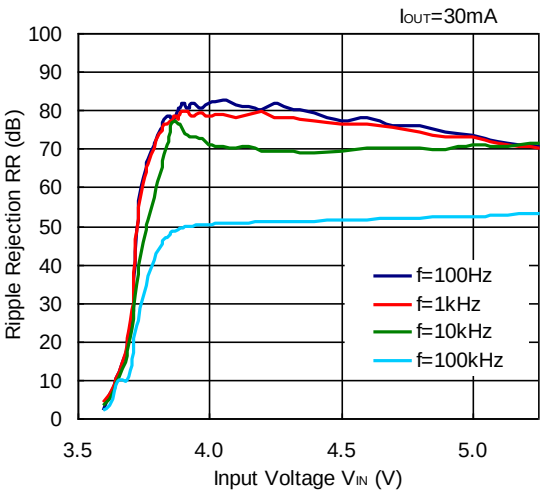

10) Ripple Rejection vs. Frequency (C1 = none, C2 = Ceramic 1.0 µF, Ripple = 0.2 Vp-p, Ta = 25°C)

RP111x071x

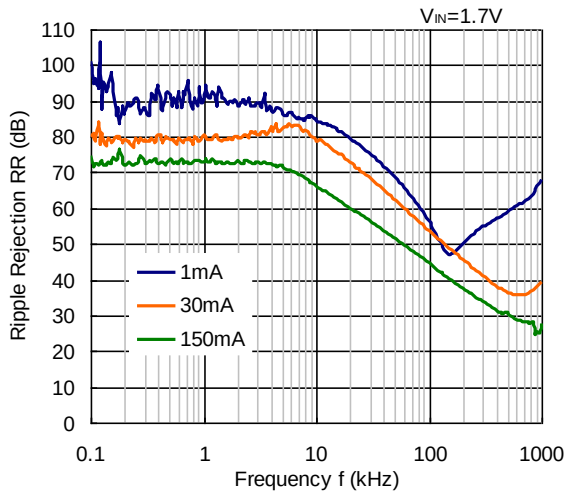

RP111x171x

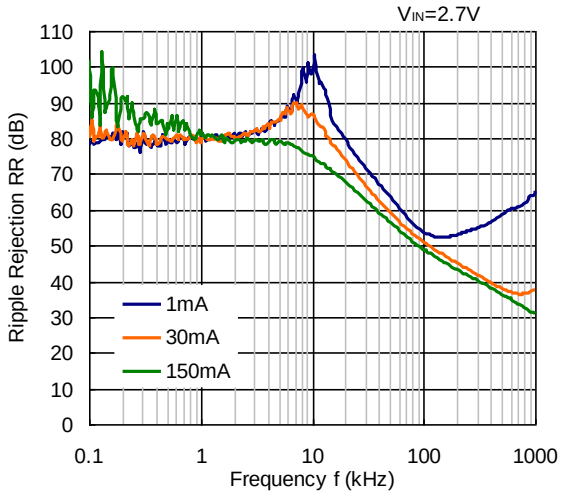

RP111x181x

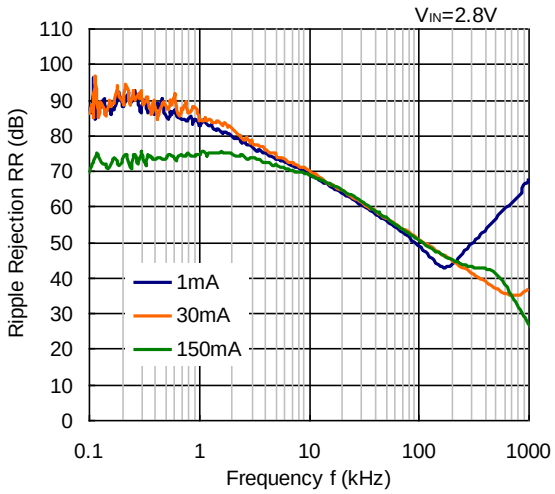

RP111x281x

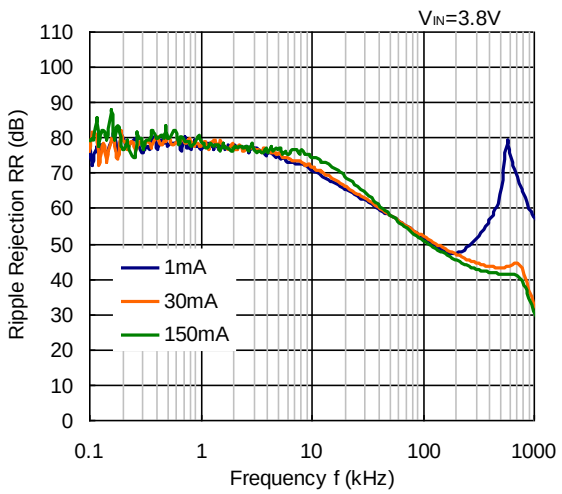

RP111x361x

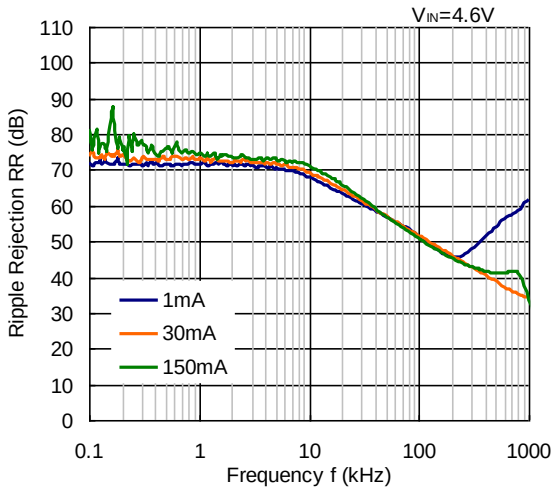

11) Input Transient Response (C1= none, C2 = Ceramic 1.0 µF, I_{OUT} = 30 mA, tr = tf = 5 µs, Ta = 25°C)

RP111x071x

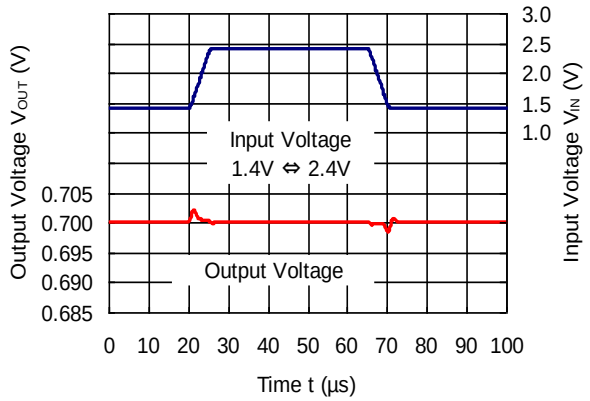

RP111x171x

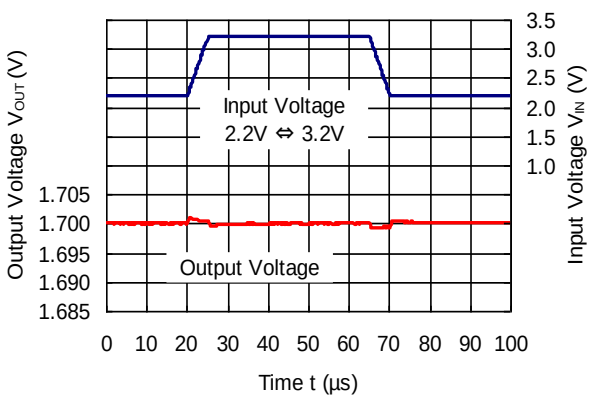

RP111x181x

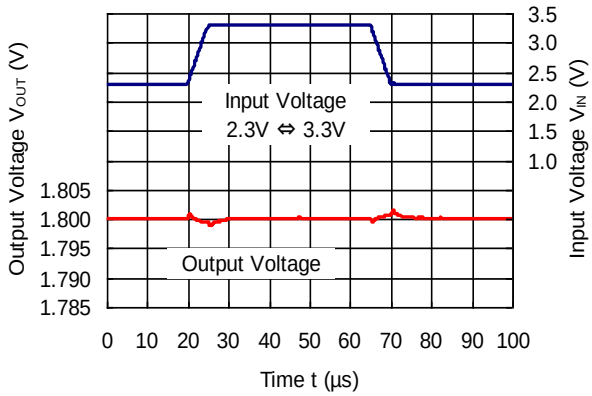

RP111x281x

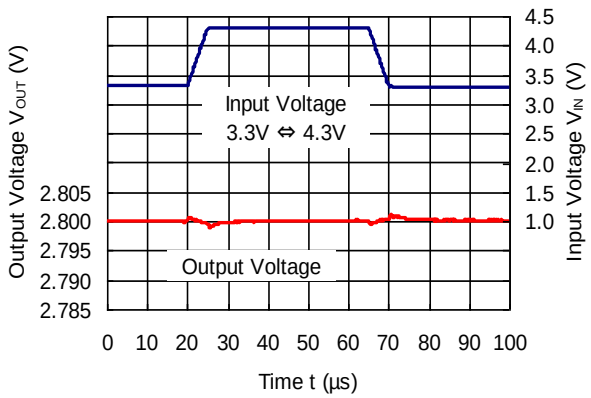

RP111x361x

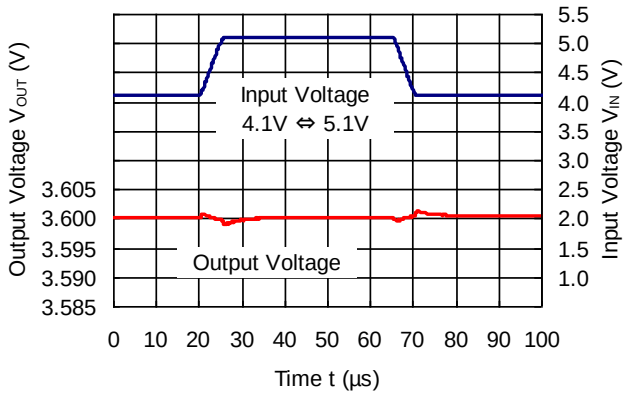

12) Load Transient Response (C1 = Ceramic 1.0 µF, C2 = Ceramic 1.0 µF, Ta = 25°C)

RP111x071x

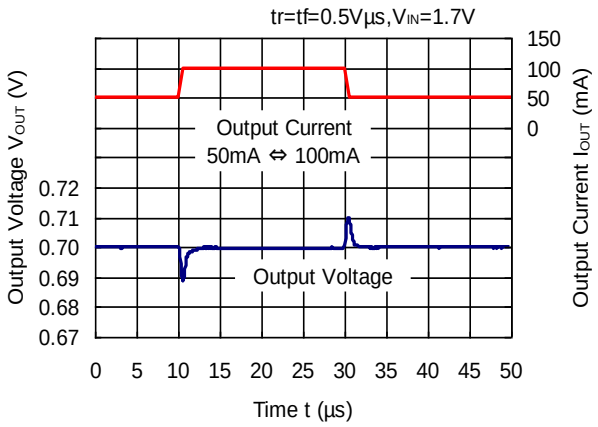

RP111x071x

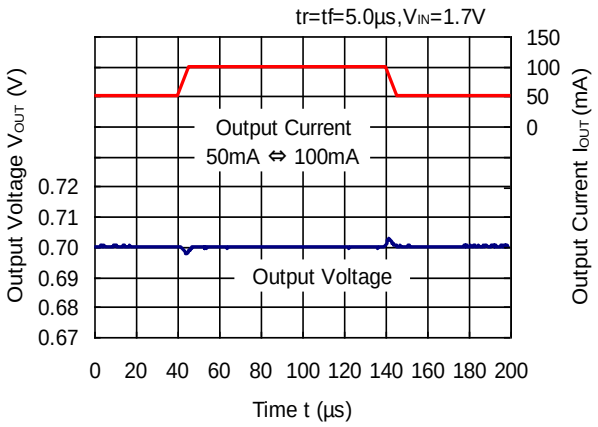

RP111x071x

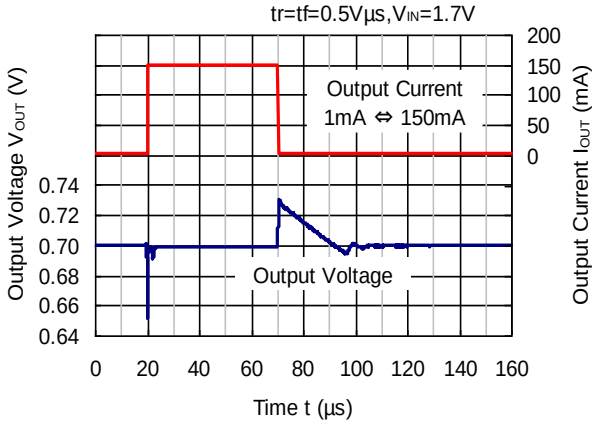

RP111x071x

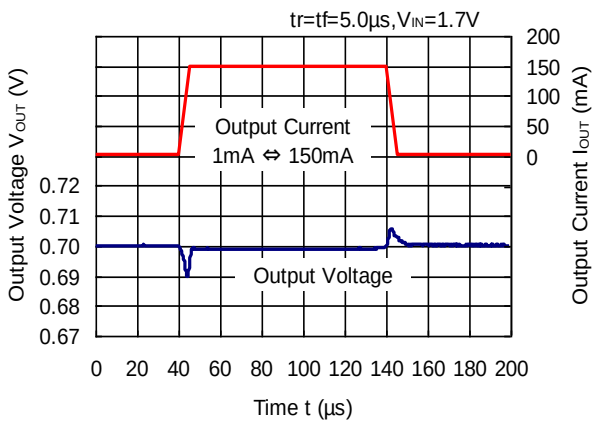

RP111x071x

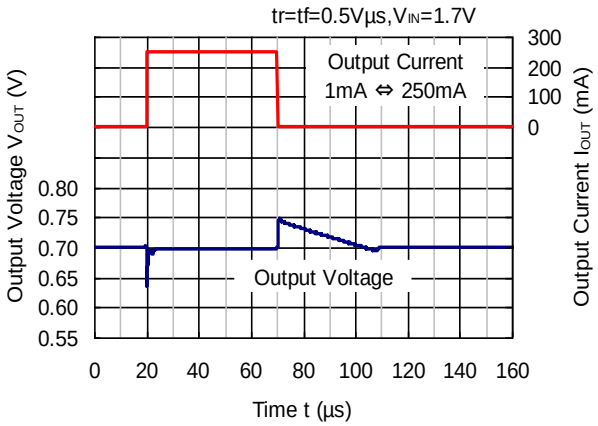

RP111x071x

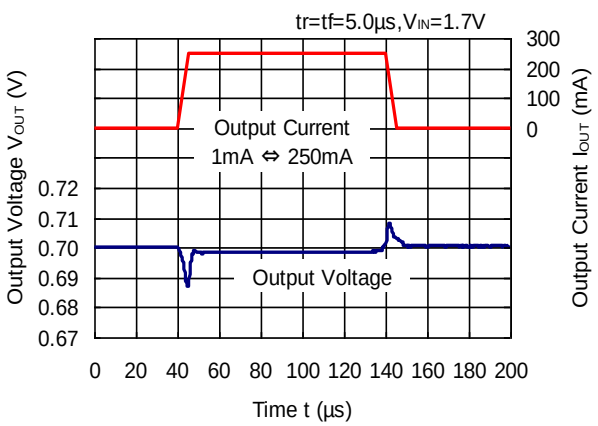

RP111x171x

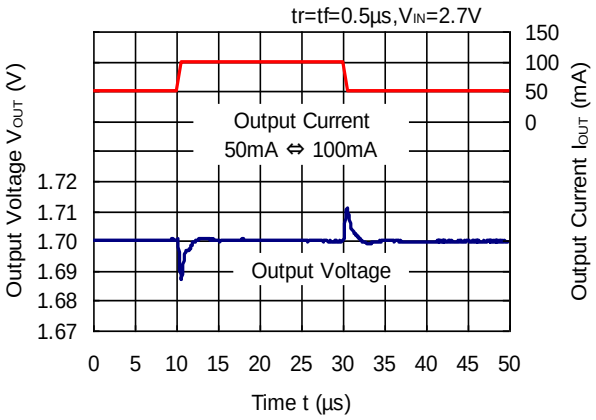

RP111x171x

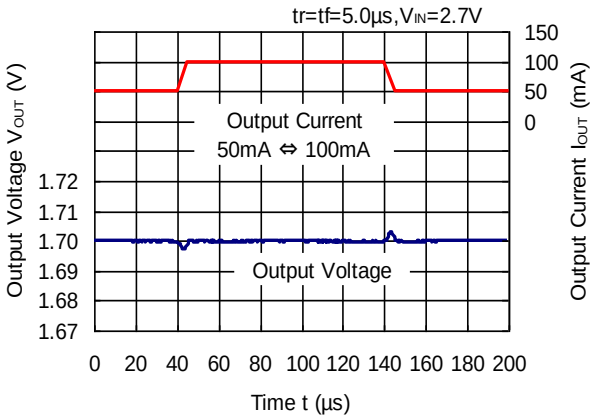

RP111x171x

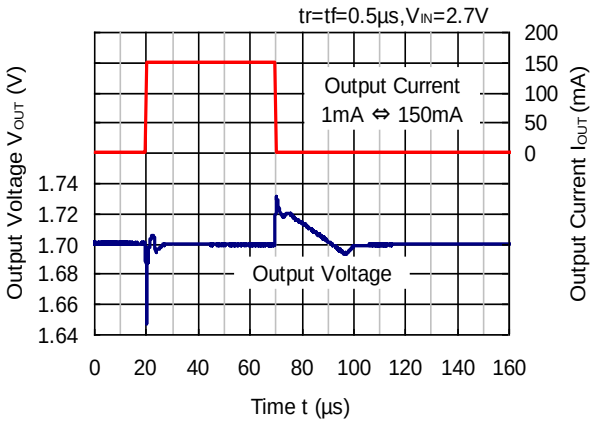

RP111x171x

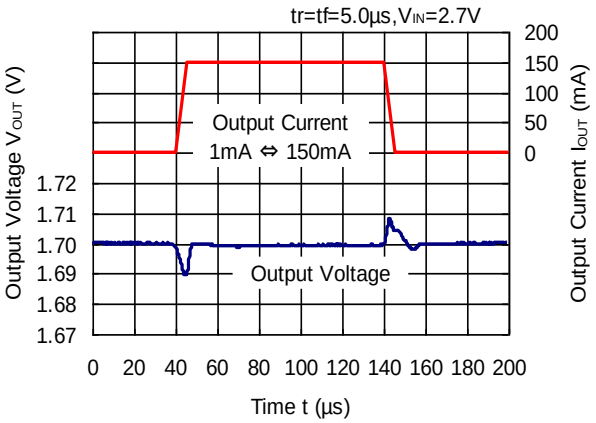

RP111x171x

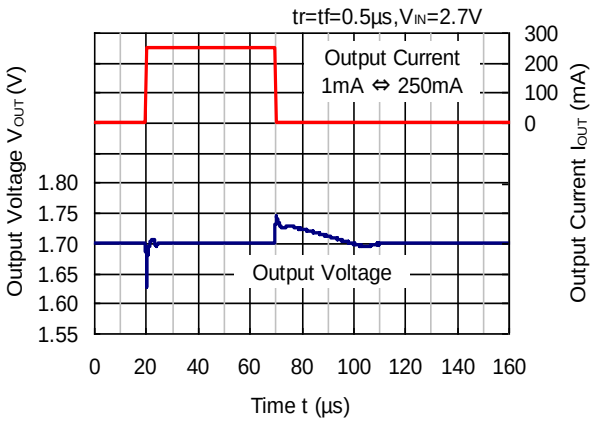

RP111x171x

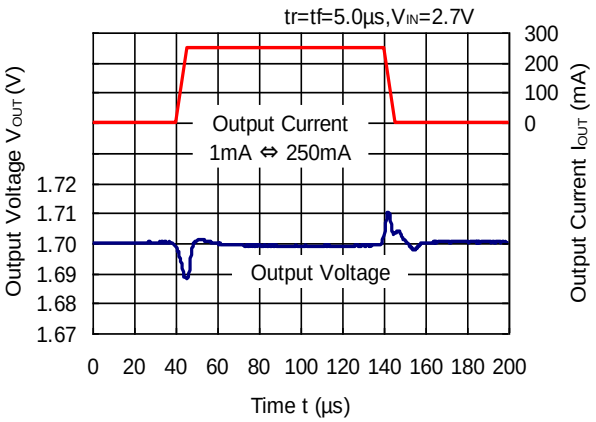

RP111x181x

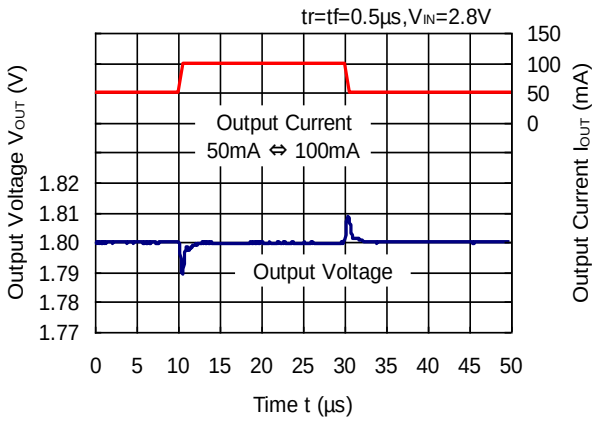

RP111x181x

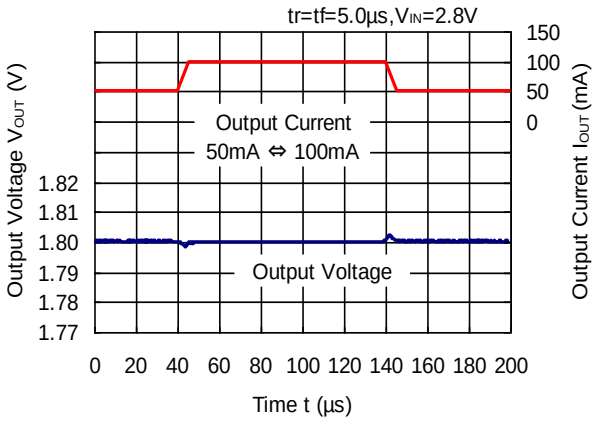

RP111x181x

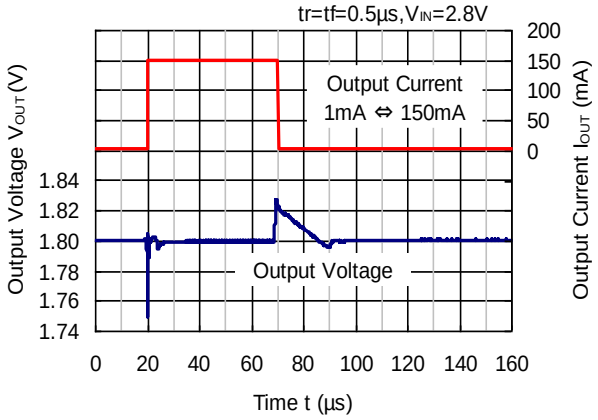

RP111x181x

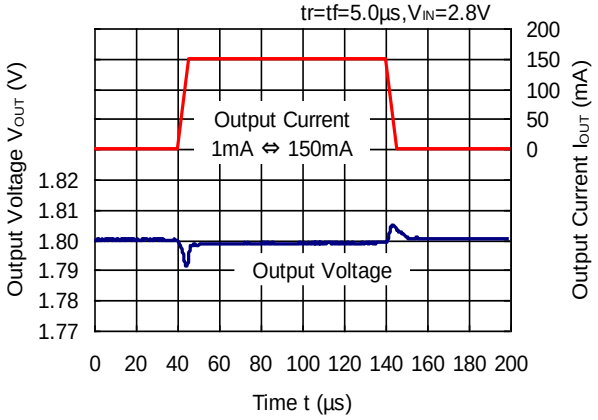

RP111x181x

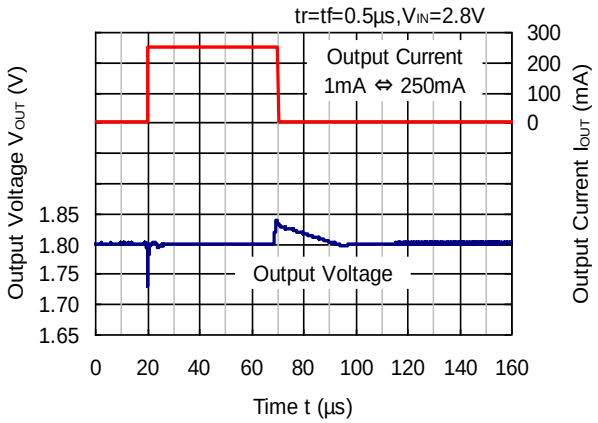

RP111x181x

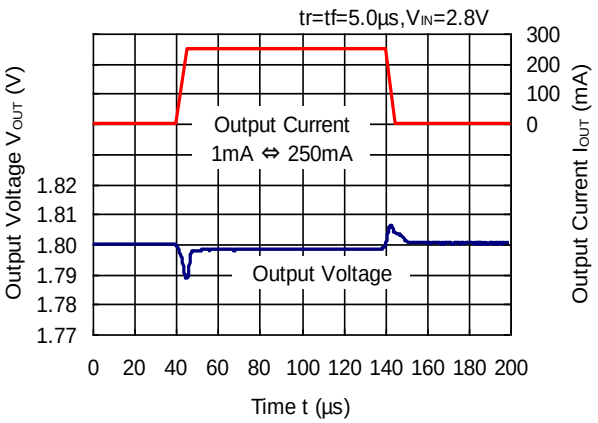

RP111x281x

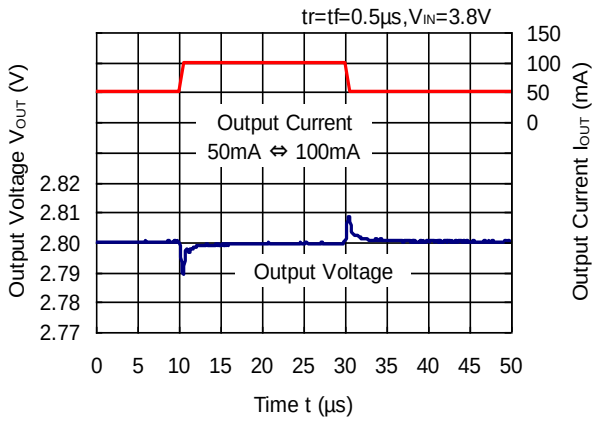

RP111x281x

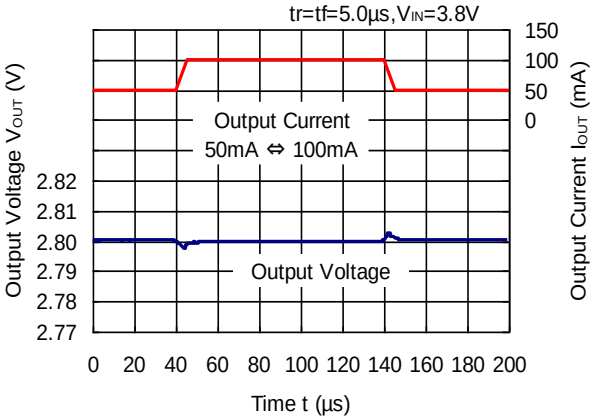

RP111x281x

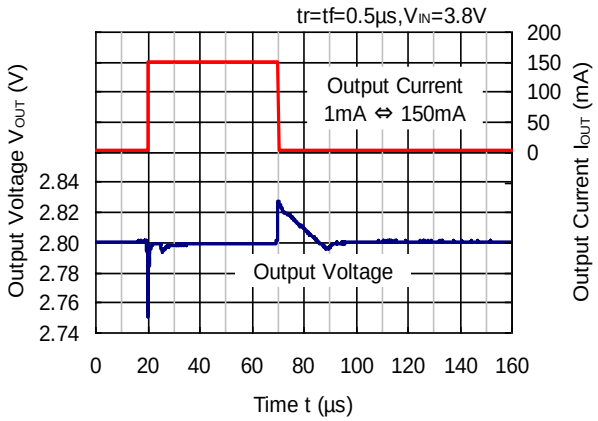

RP111x281x

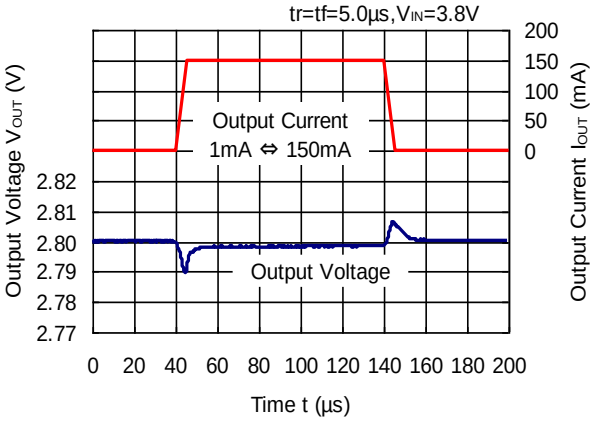

RP111x281x

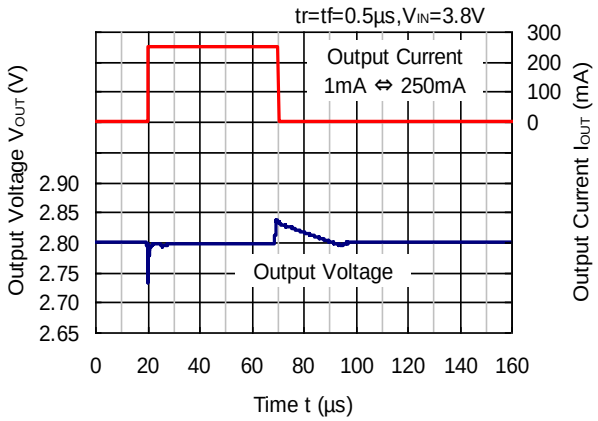

RP111x281x

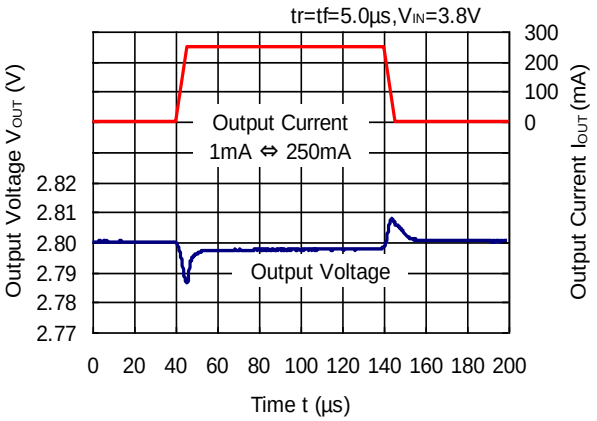

RP111x361x

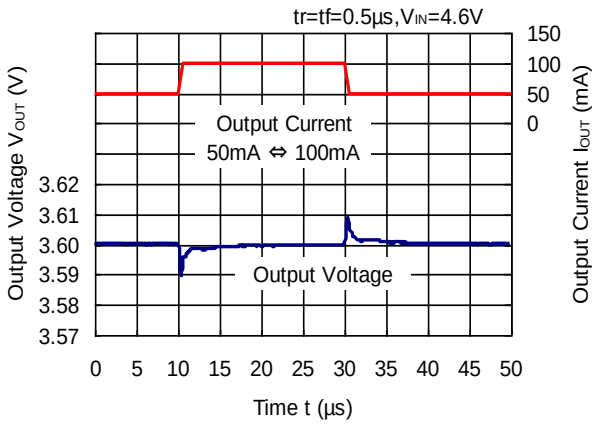

RP111x361x

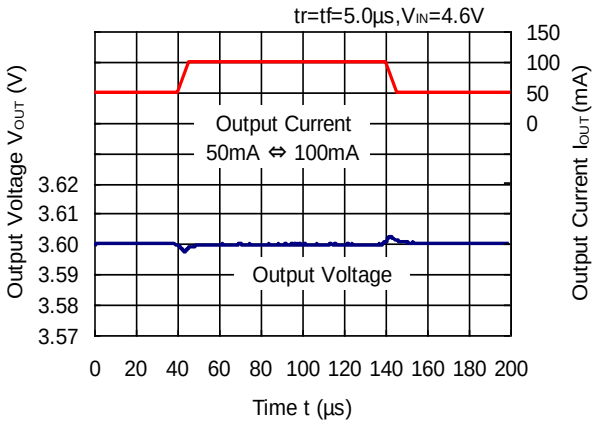

RP111x361x

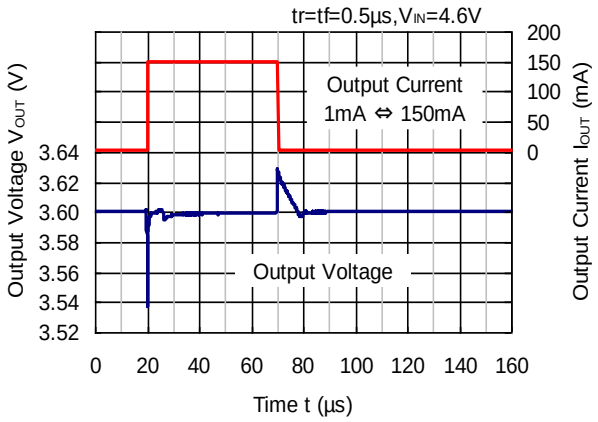

RP111x361x

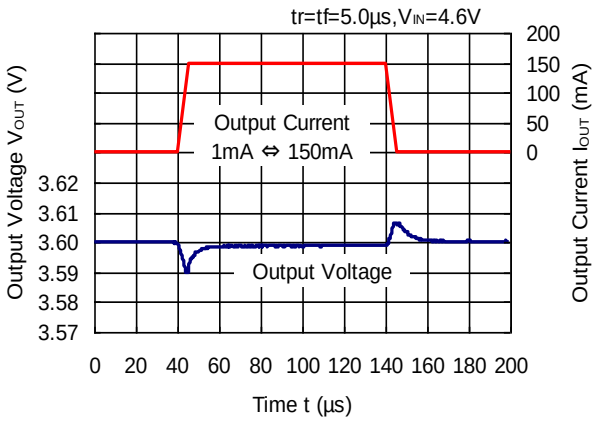

RP111x361x

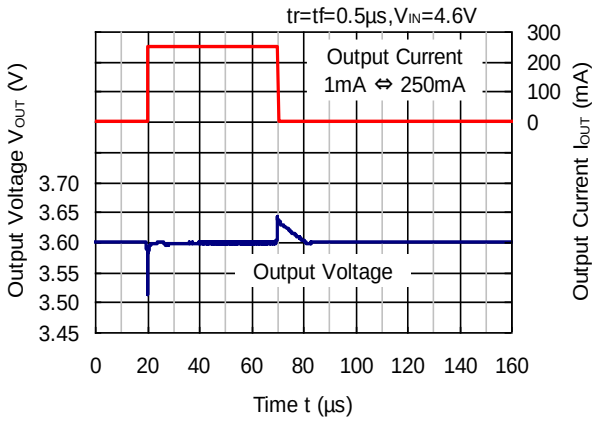

RP111x361x

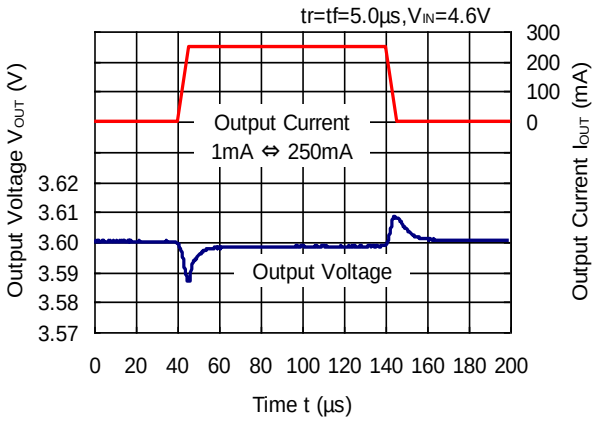

13) Turn on Speed with CE pin (C1 = Ceramic 1.0 µF, C2 = Ceramic 1.0 µF, Ta = 25°C)

RP111x071x

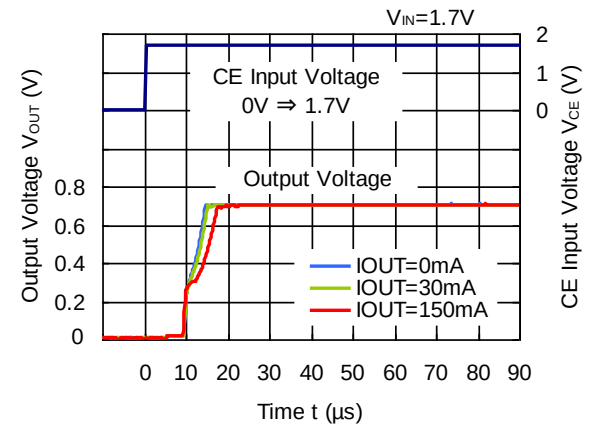

RP111x171x

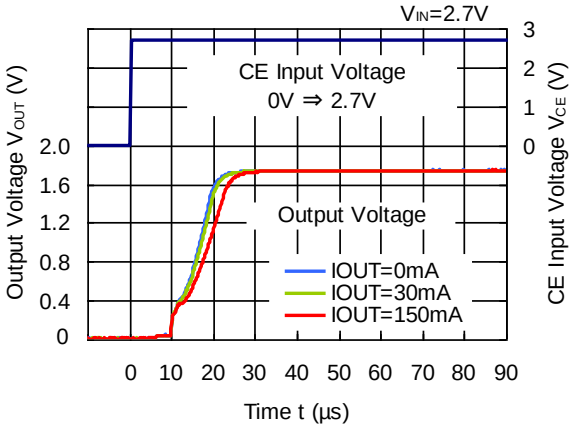

RP111x181x

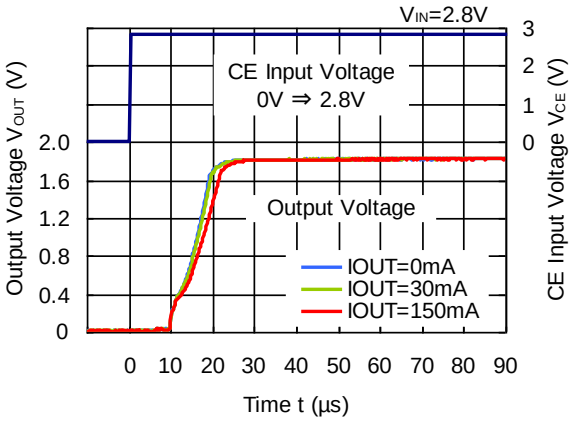

RP111x281x

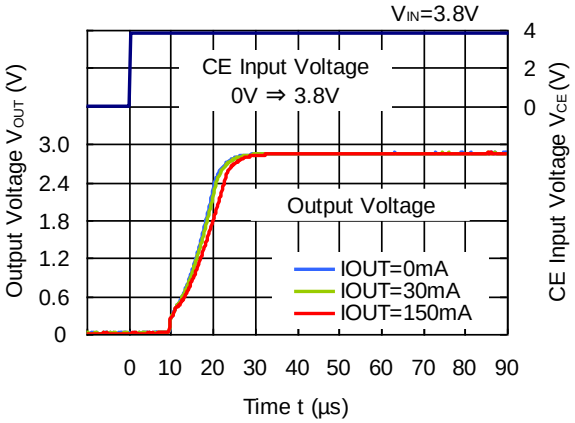

RP111x361

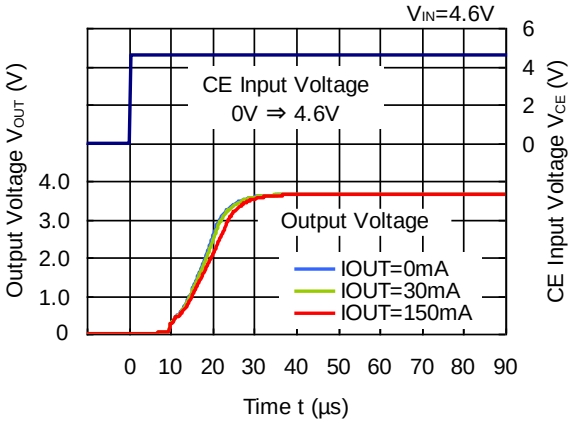

14) Turn off Speed with CE pin (C1 = Ceramic 1.0 µF, C2 = Ceramic 1.0 µF, Ta = 25°C)

RP111x071D

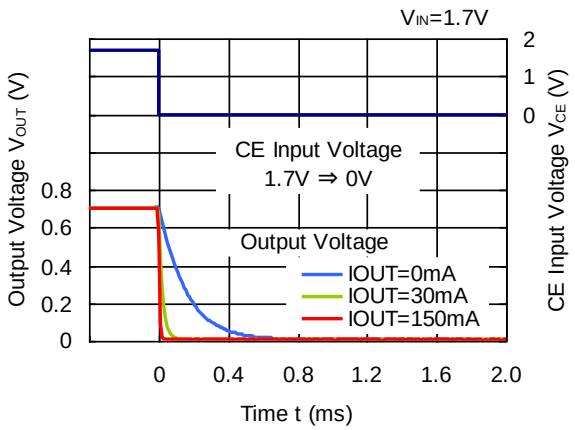

RP111x171D

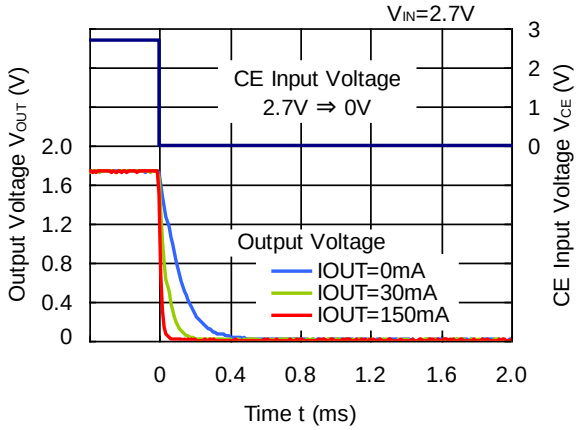

RP111x181D

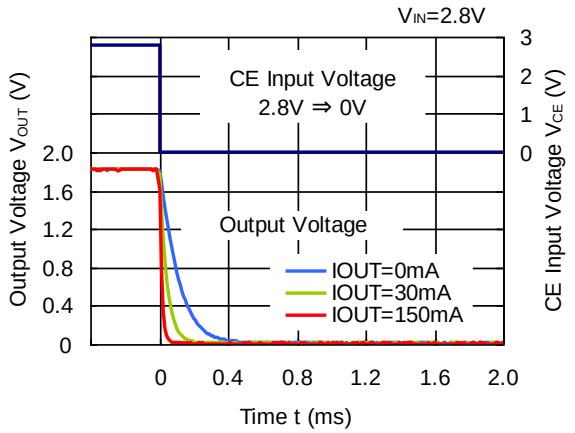

RP111x281D

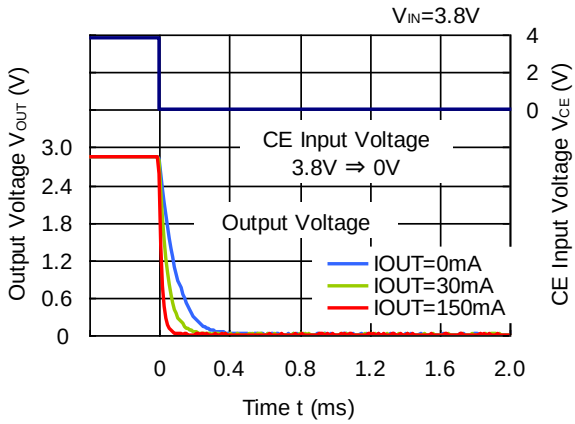

RP111x361D

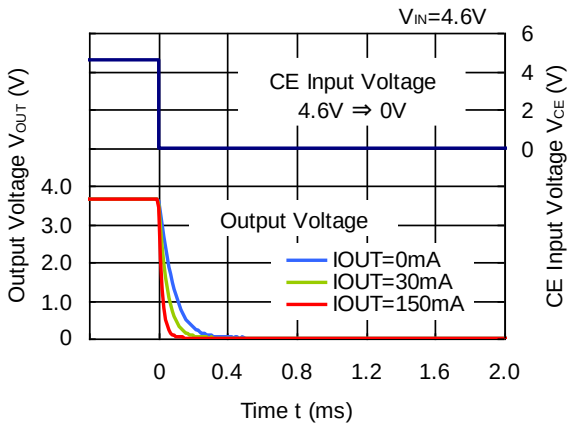

15) Inrush Current (C1 = Ceramic 1.0 µF, I_{OUT} = 0 mA, Ta = 25°C)

RP111x071x

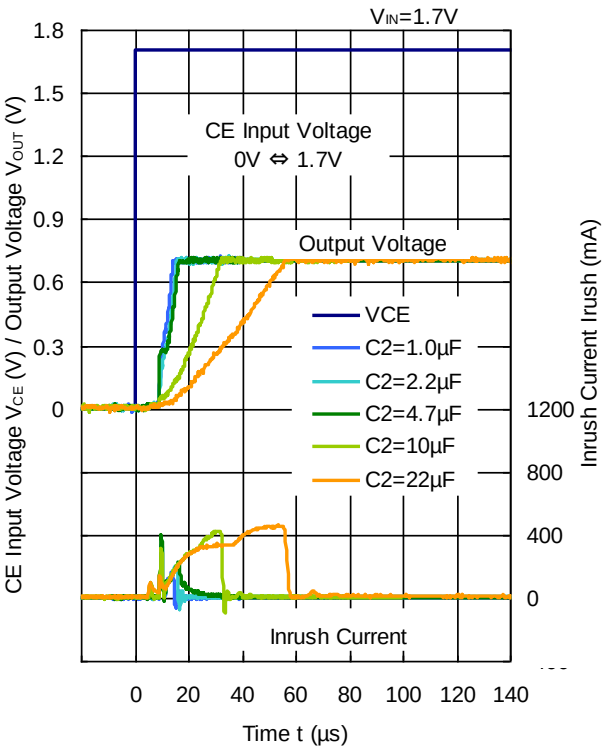

RP111x071x

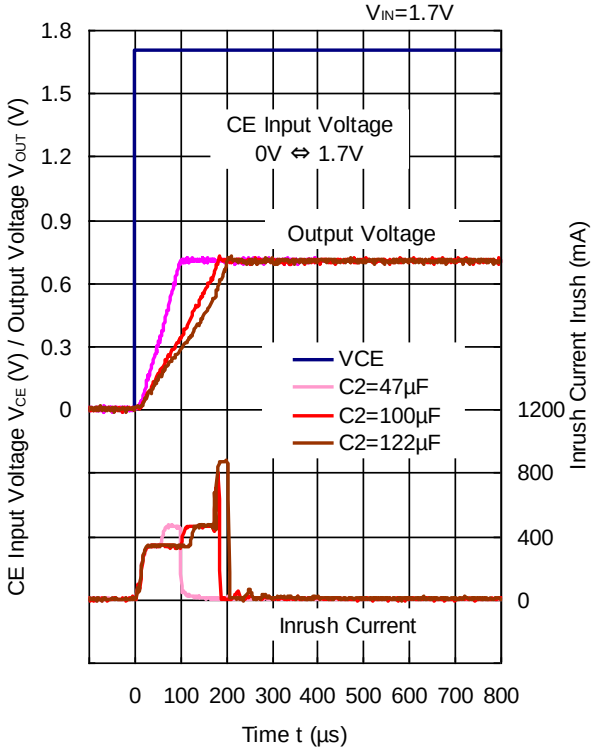

RP111x171x

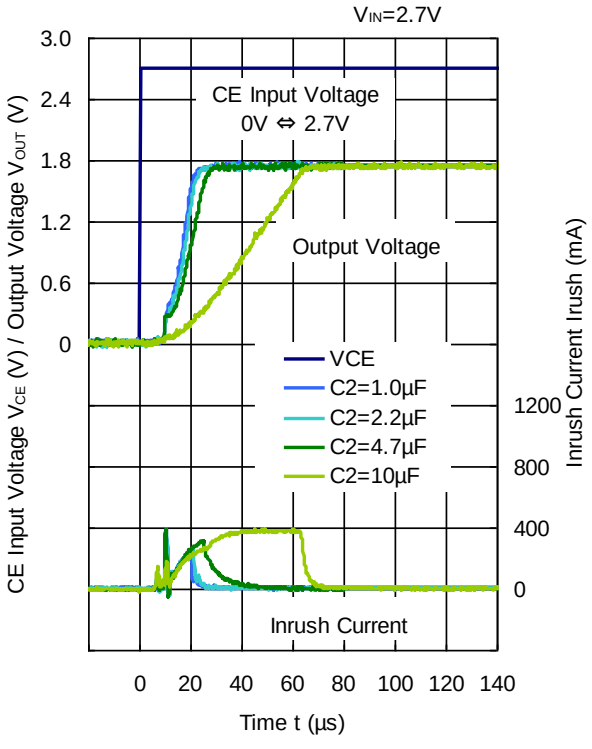

RP111x171x

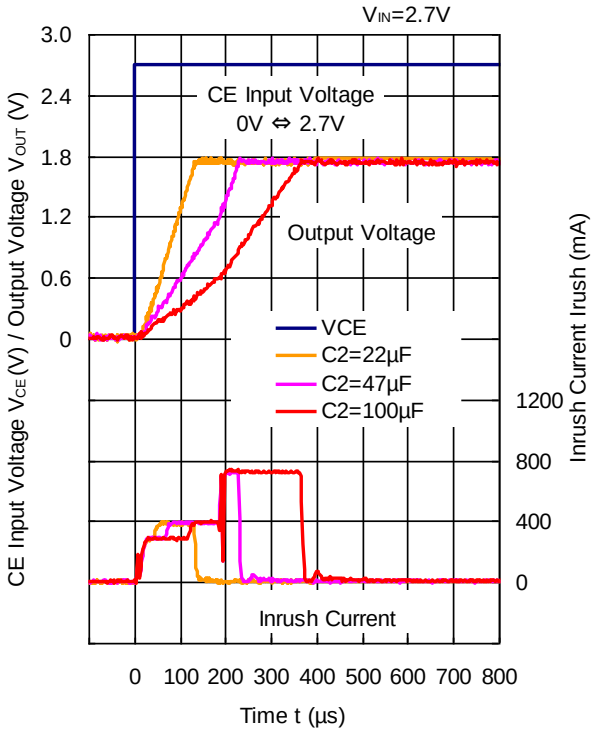

RP111x181x

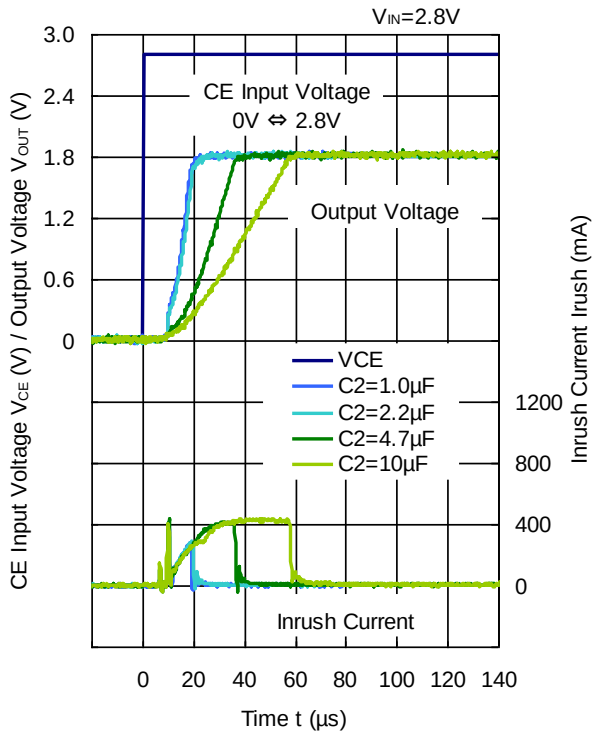

RP111x181x

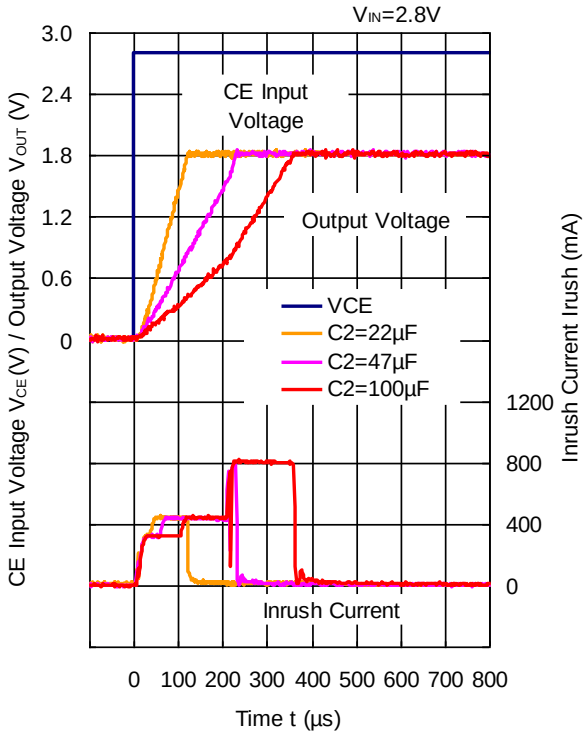

RP111x281x

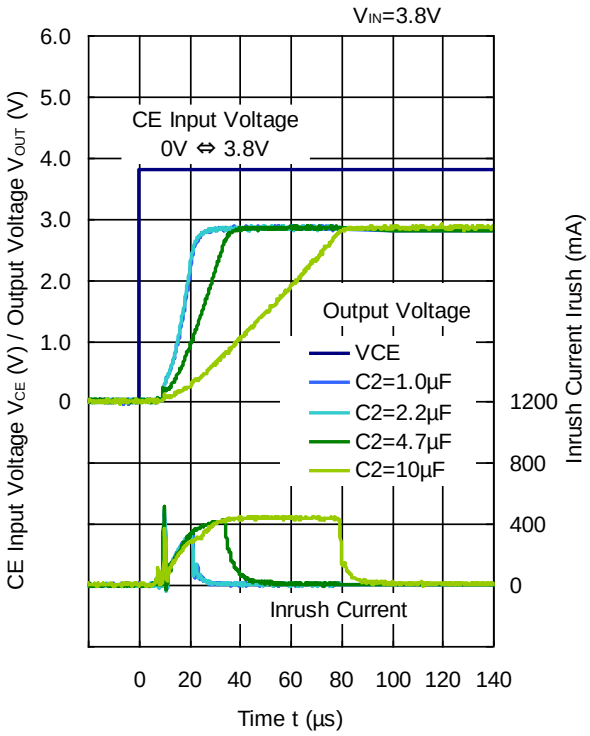

RP111x281x

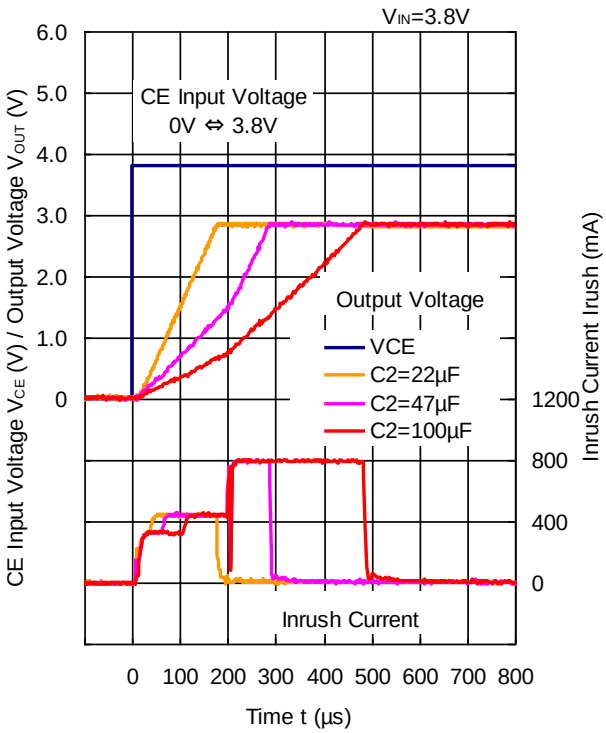

RP111x361x

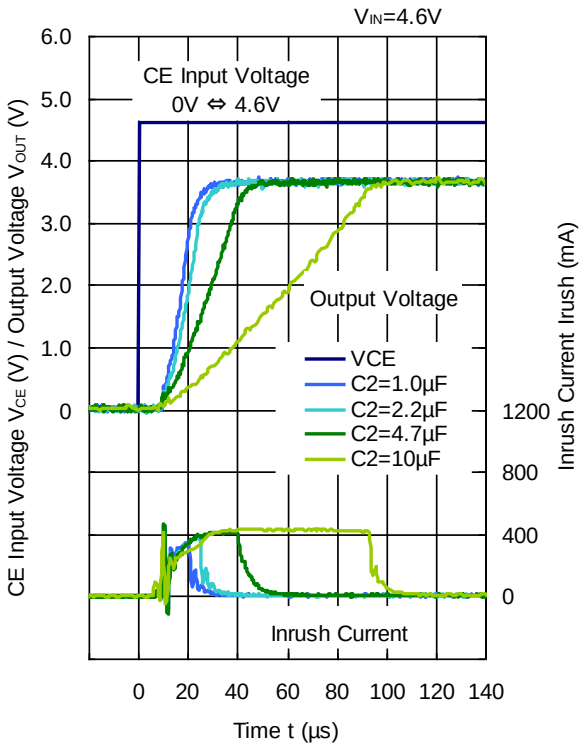

RP111x361x

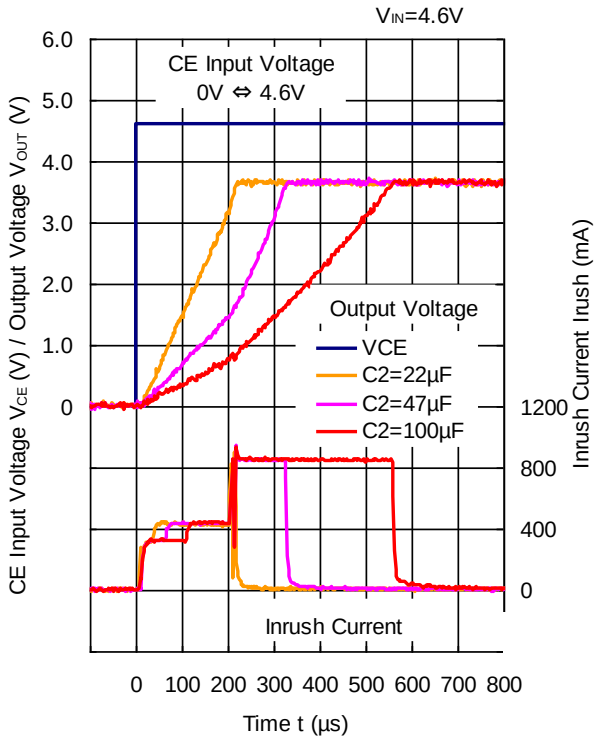

Measurement Components of Typical Characteristics

Symbol	Capacitance	Test item	Manufacture	Parts number
C1	1.0 µF	All	Murata	GRM155B31A105KE15
C2	1.0 µF	All except Inrush Current	Murata	GRM155B31A105KE15

ESR vs. Output Current

When using these ICs, consider the following points: The relations between I_{OUT} (Output Current) and ESR of an output capacitor are shown below. The conditions when the white noise level is under 40 μV (Avg.) are marked as the hatched area in the graph.

Measurement Conditions

Frequency Band : 10 Hz to 2 MHz
Temperature : −40°C to 85°C
C1, C2 :1.0 μF or more

RP111x071x

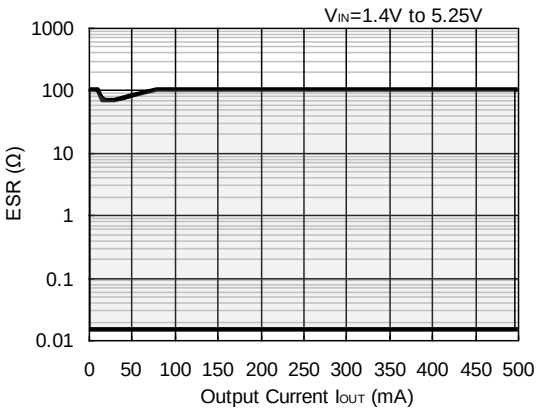

RP111x171x

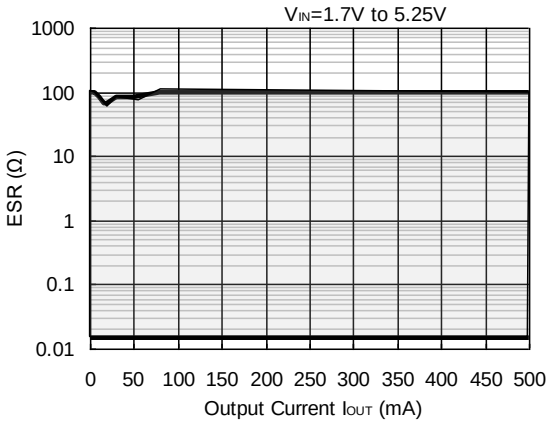

RP111x181x

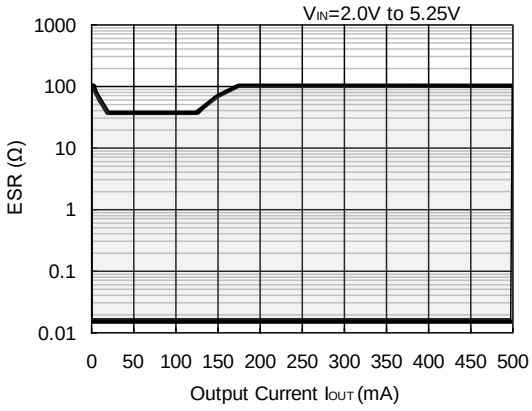

RP111x281x

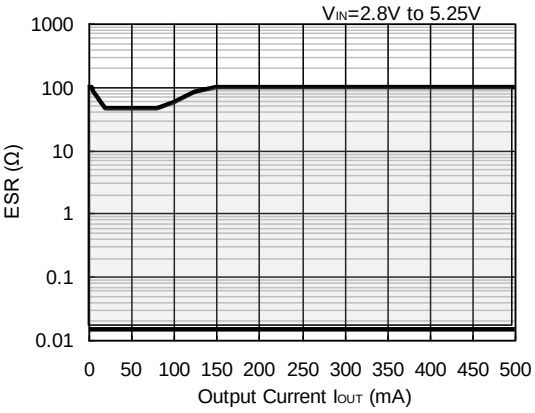

RP111x361x

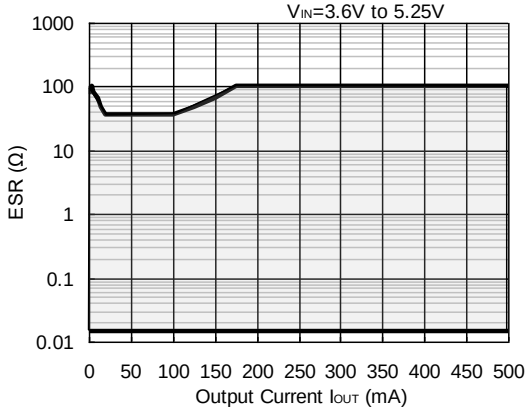

1. The products and the product specifications described in this document are subject to change or discontinuation of production without notice for reasons such as improvement. Therefore, before deciding to use the products, please refer to our sales representatives for the latest information thereon.
2. The materials in this document may not be copied or otherwise reproduced in whole or in part without the prior written consent of us.
3. This product and any technical information relating thereto are subject to complementary export controls (so-called KNOW controls) under the Foreign Exchange and Foreign Trade Law, and related politics ministerial ordinance of the law. (Note that the complementary export controls are inapplicable to any application-specific products, except rockets and pilotless aircraft, that are insusceptible to design or program changes.) Accordingly, when exporting or carrying abroad this product, follow the Foreign Exchange and Foreign Trade Control Law and its related regulations with respect to the complementary export controls.
4. The technical information described in this document shows typical characteristics and example application circuits for the products. The release of such information is not to be construed as a warranty of or a grant of license under our or any third party's intellectual property rights or any other rights.
5. The products listed in this document are intended and designed for automotive applications. Those customers intending to use a product in an application requiring extreme quality and reliability, for example, in a highly specific application where the failure or misoperation of the product could result in human injury or death should first contact us.
    - Aerospace Equipment
    - Equipment Used in the Deep Sea
    - Power Generator Control Equipment (nuclear, steam, hydraulic, etc.)
    - Life Maintenance Medical Equipment
    - Fire Alarms / Intruder Detectors
    - Vehicle Control Equipment (airplane, railroad, ship, etc.)
    - Various Safety Devices
    - Traffic control system
    - Combustion equipment

    In case your company desires to use this product for any applications other than general electronic equipment mentioned above, make sure to contact our company in advance. Note that the important requirements mentioned in this section are not applicable to cases where operation requirements such as application conditions are confirmed by our company in writing after consultation with your company.
6. We are making our continuous effort to improve the quality and reliability of our products, but semiconductor products are likely to fail with certain probability. In order to prevent any injury to persons or damages to property resulting from such failure, customers should be careful enough to incorporate safety measures in their design, such as redundancy feature, fire containment feature and fail-safe feature. We do not assume any liability or responsibility for any loss or damage arising from misuse or inappropriate use of the products.
7. The products have been designed and tested to function within controlled environmental conditions. Do not use products under conditions that deviate from methods or applications specified in this datasheet. Failure to employ the products in the proper applications can lead to deterioration, destruction or failure of the products. We shall not be responsible for any bodily injury, fires or accident, property damage or any consequential damages resulting from misuse or misapplication of the products.
8. Quality Warranty

    8-1. Quality Warranty Period

    In the case of a product purchased through an authorized distributor or directly from us, the warranty period for this product shall be one (1) year after delivery to your company. For defective products that occurred during this period, we will take the quality warranty measures described in section 8-2. However, if there is an agreement on the warranty period in the basic transaction agreement, quality assurance agreement, delivery specifications, etc., it shall be followed.

    8-2. Quality Warranty Remedies

    When it has been proved defective due to manufacturing factors as a result of defect analysis by us, we will either deliver a substitute for the defective product or refund the purchase price of the defective product.
    Note that such delivery or refund is sole and exclusive remedies to your company for the defective product.

    8-3. Remedies after Quality Warranty Period

    With respect to any defect of this product found after the quality warranty period, the defect will be analyzed by us. On the basis of the defect analysis results, the scope and amounts of damage shall be determined by mutual agreement of both parties. Then we will deal with upper limit in Section 8-2. This provision is not intended to limit any legal rights of your company.
9. Anti-radiation design is not implemented in the products described in this document.
10. The X-ray exposure can influence functions and characteristics of the products. Confirm the product functions and characteristics in the evaluation stage.
11. WLCSP products should be used in light shielded environments. The light exposure can influence functions and characteristics of the products under operation or storage.
12. Warning for handling Gallium and Arsenic (GaAs) products (Applying to GaAs MMIC, Photo Reflector). These products use Gallium (Ga) and Arsenic (As) which are specified as poisonous chemicals by law. For the prevention of a hazard, do not burn, destroy, or process chemically to make them as gas or power. When the product is disposed of, please follow the related regulation and do not mix this with general industrial waste or household waste.
13. Please contact our sales representatives should you have any questions or comments concerning the products or the technical information.

NISSHINBO

Nisshinbo Micro Devices Inc.

Official website
https://www.nisshinbo-microdevices.co.jp/en/

Purchase information
https://www.nisshinbo-microdevices.co.jp/en/buy/

ENTEGRECİ

Bu belge www.entegreci.com üzerinden sunulmaktadır.

Elektronik komponent tedarikinde Entegreci

Entegreci, Eskişehir merkezli, Türkiye geneline satış yapan bir elektronik komponent mağazasıdır. Entegreler (IC), mikrodenetleyiciler, transistörler, diyotlar, pasif elemanlar, konnektörler, modüller ve geliştirme kartları tek adetten seri üretim adetlerine kadar satılır. Ürün sayfalarında güncel stok durumunu, fiyatı ve datasheet bağlantısını bulabilirsiniz.

Parça koduyla arama

Üretici parça numarasını yazın; stok ve fiyatı hemen görün.

www.entegreci.com

Ürün kategorileri

Entegreden kapasitöre tüm elektronik komponent kategorileri.

Kategorilere göz atın

Üreticiler

Aradığınız üreticinin ürünlerini tek sayfada inceleyin.

Üreticileri görün

Toplu alım ve teklif

Listede olmayan ya da yüksek adetli parçalar için teklif isteyin.

Teklif isteyin

www.entegreci.com | **destek@entegreci.com** | **0850 305 90 34**

Entegreci is an online electronic components store based in Türkiye. Search by manufacturer part number to see stock, prices and datasheets for integrated circuits, microcontrollers, transistors, passive components and connectors, or request a quote for parts that are not listed.

Bu sayfa Entegreci tarafından eklenmiştir. Belgenin önceki sayfaları asıl yayıncısına aittir ve içeriği değiştirilmemiştir; en güncel sürüm için belgenin yayıncısına başvurun.